GALVESTON COUNTY, TEXAS

COMMISSIONERS COURT **722 Moody, County Courthouse, Galveston, Texas 77550 (409) 766-2244**

Mark Henry	Patrick Doyle	Kevin O'Brien	Stephen Holmes	Ken Clark
County Judge	Commissioner, Precinct 1	Commissioner, Precinct 2	Commissioner, Precinct 3	Commissioner, Precinct 4

AGENDA
August 21, 2012 – 1:30 P.M.

CONSENT AGENDA: ALL ITEMS MARKED WITH A SINGLE ASTERISK (*) ARE PART OF THE CONSENT AGENDA AND REQUIRE NO DELIBERATION BY THE COMMISSIONERS COURT. ANY COMMISSIONERS COURT MEMBER MAY REMOVE AN ITEM FROM THIS AGENDA TO BE CONSIDERED SEPARATELY.

In accordance with the provisions of the Americans with Disabilities Act (ADA), persons in need of a special accommodation to participate in this proceeding shall, within three (3) days prior to any proceeding contact the County Judge's office at 722 Moody, Galveston, Texas 77550 (409) 766-2244.

REGULARLY SCHEDULED MEETING

Pledge of Allegiance and Invocation

*1. Submitted by County Auditor's Office:

a. Approval of Accounts Payable Checks dated 8/14/12 and 8/21/12.

b. Order for Payroll period ending 8/15/2012 Bi-Weekly #17.

c. Internal audit review of the invoices regarding the CDBG Non-Housing Grant as of March 31, 2012 and response letter from Mel Trammell, Director of Finance.

d. Internal audit report for the surprise cash count performed on July 16, 2012 for the County Parks Department.

e. Order for Health Insurance claims made by Boon Chapman for the months ending:

1. March 31, 2012

2. April 30, 2012

3. May 31, 2012

4. June 30, 2012

*2. Receive and file *Summary of Bi-Weekly Personnel Movements pay period #16, July 19-August 1, 2012* submitted by Human Resources.

*3. Receive and file *Notice pursuant to H.B. 3059, Section 366.005 of Texas-New Mexico Power Company* providing utility service to Galveston County.

*4. Receive and file *Consideration of Authorization to dispose of Salvage or Surplus Property* submitted by the Purchasing Agent.

*5. Receive and file *Recognition of Certificates* for the following Purchasing Department employees:

a. Rufus Crowder, Certified Public Procurement Officer, Certified Professional Public Buyer.

b. Denise Guess, Certified Professional Public Buyer.

*6. Receive and file the following *Contracts with the County of Galveston for Election* Services for the November 6th General Election submitted by the County Clerk:

a. Bayview MUD

b. Flamingo Isles MUD

*7. Receive, file, and ratify *Order for the November 6, 2012 Election* submitted by the County Clerk.

*8. Consideration of *Approval of Early Voting and Election Day Voting locations for the November 6, 2012 General Election* submitted by the County Clerk.

*9. Consideration of Authorizing County Judge to sign the *Eligible 457 Prototype Plan and Trust Agreement* submitted by the County Judge.

*10. Consideration of *Affirmation & Confirmation of Galveston County Rural Rail Transportation District Board Members* submitted by the County Judge.

*11. Consideration of the *reappointment of John Konikowski, MD, Steven Leach, CRNA, DNP, and Bernard Milstein, MD and the appointment of Michael Ehrat, Keith Casey and Scott Johnson, DVM to the United Board of Health with terms expiring April 30, 2014* submitted by the County Judge.

*12. Consideration of the *appointment of Shane Hamilton to the Gulf Coast Water Authority* submitted by the County Judge.

*13. Consideration of Adoption of *TCDRS Annually Determined Contribution Rate for 2013* submitted by County Legal.

*14. Receipt of *No Objection Letter from the U.S. Dept. of Justice on the July 31, 2012 primary runoff election for the Democratic and Republican Parties* submitted by County Legal.

*15. Receive and file *Gulf Coast Water Authority Board of Directors, appointment of Mainland Municipal Advisory Committee*.

*16. Receive and file a *Contract for the construction and installation of an emergency generator at Santa Fe High School* submitted by CDBG Project Coordinator.

*17. Reconsideration of *waiver of Penalty and Interest cases # 32 b, originally presented on July 24, 2012 under agenda item # 26 a.*

*18. Consideration of acceptance of *Official Bond of appointed Justice of the Peace, Precinct 7*.

*19. Consideration of a *Resolution Recognizing the Exemplary Work of DSW Homes.*

*20. Consideration of *approval of the closure of the boat ramp at Walter Hall Park on Friday, Sept. 21-Sunday, Sept. 23, 2012 due to the Boogie, Blues & Brews special event*, submitted by the Parks & Senior Services Department.

*21. Consideration of granting authority to County Judge to sign *Trustee's Deeds on the following tax foreclosed properties*.

a. CAD # 2597-0002-0028-000

b. CAD # 5782-0206-0005-000

c. CAD # 5721-0008-0010-000

d. CAD # 2655-0113-0017-000

e. CAD # 5265-0000-0001-000

f. CAD # 5265-0000-0019-000

*22. Consideration of requests for approval of *Tax Refunds in excess of $2,500.00* submitted by the Tax Assessor and Collector:

Account Number	**Amount**	**Reason**
2996-0000-0208-000	$8,382.00	Over Payment
5182-0218-0003-001	$2,816.32	Over Payment
4525-0000-0037-000	$2,640.55	Over Payment
2620-0000-1462-000	$3,494.30	Over Payment

3505-0369-0013-000	$3,509.68	Over Payment
3094-0000-0043-000	$4,884.56	Over Payment
1642-0008-0021-000	$2,952.16	Over Payment

*23. Request for consideration of execution of *Indemnification Request Form* for shortage of $20.00 submitted by the Tax Assessor and Collector.

*24. Consideration of accepting *Right of Deed on Parcel 129, F.M. 646* submitted by Right of Way.

25. **Community Services**

a. Consideration of authorizing the transfer of $250,000 (two hundred and fifty thousand dollars) for the State Non-Federal Share Private Hospital Medicaid Fund (UPL), made in concert with the affiliated private hospitals of Galveston and neighboring counties.

26. **County Engineer**

a. Consideration of change order no. 3 to the Metro City Construction, LP contract for the Owens Drive Improvements project.

b. Consideration of change order no. 3 to the R W Lucas Construction contract for the Improvements to Deats Road from GH&H to FM 1266 project.

c. Consideration of change order no. 3 to the Angel Brothers Enterprises, Ltd. contract for Paving & Drainage Improvements for Louisiana Ave. project.

d. Consideration of application from W. R. Miller as General Partner of the W.R. Miller Family Partnership, LTD and Randall Butler as President of Butler Asset Holdings, LLC to convey portions of Lot 4, Tract 4-A, in Block 2 and portions of Tract 5-A and 6-A, Block 2, Copacabana by the Sea subdivision on Bolivar Peninsula by metes & bounds without revising the plat.

27. **County Legal**

a. Consideration of Terminating the Agreement for LockBox Services Between the County of Galveston and Moody National Bank and authorizing County Legal to Notify Moody National Bank submitted by County Legal on behalf of the County Tax Assessor Collector.

28. **Justice Administration**

a. Consideration of subscription to Westlaw NEXT:

1. Law Library – Public Access

2. District Attorney, Courts and County Staff

3. Jail Library – Inmate Access

29. **Juvenile Justice**

a. Consideration of approval of Memorandum of Understanding and Interlocal Agreement for the Operation of the Galveston County Juvenile Justice Alternative Education Program for the 2012-2013 School Year.

30. **Purchasing**

a. Consider recommending awarding a contract on the following bids:

1. Bid #B121027 Stewart Road Improvements Project from Cove View Street to 7 ½ Mile Road

2. Bid #B122027 Inmate Clothing and Supplies

3. Bid #B122028 Vehicle Repair

b. Consider authorizing a price increase for the following RFP:

1. RFP #B102014 Food Service for Galveston County Jail

c. Consider cancelling and authorize a re-bid on the following bid:

1. Bid #B102016 Cement Stabilized Crushed Concrete Base

31. **Road and Bridge**

a. Consideration and execution of FY 2013 Joint Funding Agreement with the United States Geological Survey for surface-water data collection activities during the period October 1, 2012 through September 30, 2013.

32. **Tax Assessor and Collector**

a. Request for waiver of penalty and interest:

Name	Account Number	Year	Amount
Boyd Thomure	6240-0024-0045-000	2011	$103.37
Ron & Kim Jorgensen	5468-0000-0223-000	2011	$ 11.03
Ron & Kim Jorgensen	5468-0000-0224-000	2011	$154.52
Jan Player	4155-0004-0043-000	2010	$115.46
Gerald & Frances Gambino	4240-0000-0122-003	2011	$ 52.01

James & Julie Crawford	7602-3003-0006-000	2011	$401.16
Don & Donna Bryson	4467-0003-0010-000	2011	$466.39

b. Reconsideration of requests for waiver of penalty and interest:

Name	**Account Number**	**Year**	**Amount**
Chris L. Johnson LC Partners, LP/	1999-0001-0006-000	2011	$ 164.58
Helen Graham	4615-0015-0001-000	2011	$ 633.02
James H. Yates	5191-0000-0001-000	2011	$ 408.67
Tommy Thompson	4502-0003-0008-000	2011	$ 343.11
Roger W. Peters	1647-0005-0037-000	2011	$ 537.53
Edward Bajorek Edward Bajorek	7146-0000-0022-001 7146-0000-0021-000	2011 2011	$ 400.09 $ 545.68
Robert Meek	1406-0010-0302-000	2011	$ 194.03
Liaw Mean-Liang & Yong-Fang Kuo	7702-0008-0004-000	2011	$ 239.95

c. Consideration of approval for the following contracts:

1. RSPS Contract for Ron Carter.

2. RSPS Contract for Cook Ford.

3. RSPS Contract for Star Toyota.

4. RSPS Contract for Demontrond.

5. RSPS Contract for Gay Buick GMC, Inc.

d. Request for approval of Interlocal Tax Collection Agreement between Galveston County and Water Control Improvement District #12.

33. **Finance and Administration**

a. Consideration of Budget Amendments:

Fiscal Year:	**Amendment #:**	**Description:**

2012	12-068-0821-A	**Engineering Office** – Request to transfer budget from the Emergency Management Fund – Budgeted Reserve to Disaster Recovery Fund – Hurricane Ike-Contract Services to cover contract for lowest bid on the Fort Travis Gravel Roadway and Seawall Walkway.
2012	12-069-0821-B	**Unlimited Tax Road Bonds, Series 2009A**- Request to transfer budget from Stewart Road Re- aligned, 7 Mile Re-aligned, and Avenue H to Stewart Road – Cove View to 7 Mile to cover lowest bid on Stewart Road-Cove View to 7 Mile Road Project. Also included in this budget amendment is the recognition and appropriation of the City of Galveston's contribution.
2012	12-070-0821-C	**Sheriff's Office/Communications** – Request to transfer budget from Budgeted Reserve to Capitalized Furniture, Fixtures, and Equipment in order to purchase a paging transmitter.
2012	12-071-0821-D	**Information Technology** – Request to transfer budget from Budgeted Reserve to Information Technology- Contract Services to cover expenditures with Net Sales Direct through the end of FY2012.

b. Consideration of approving change order number 2 for the Bayview MUD Galveston County Generators Project. This change is a line item change and did not result in an increase in the overall contract amount.

c. Consideration of a Resolution Designating Signatories for GLO Disaster Recovery Program Grant submitted by CDBG Project Coordinator.

d. Public Hearing on Proposed FY 2013 County Budget.

e. Adoption of the FY 2013 County Budget and establishment of budget reserves submitted by the Budget Officer.

f. Public Hearing on the District Clerk's Proposed Records Archive Fee Established under §51.305 of the Texas Government Code submitted by the District Clerk.

g. Consideration of Adoption of the District Clerk's Proposed Records Archive Fee Established Under §51.305 of the Texas Government Code submitted by the District Clerk.

h. Public Hearing on the County Clerk's Proposed Records Archive Fee Established under §118.025 and §118.011(f) of the Texas Local Government Code submitted by the County Clerk.

i. Consideration of Adoption of the County Clerk's Proposed Records Archive Fee Established under §118.025 and §118.011(f) of the Texas Local Government Code submitted by the County Clerk.

j. Consideration of Adoption of the 2012 Tax Levy for Galveston County submitted by County Legal on behalf of the Director of Finance and Administration/Budget Officer.

WORKSHOP WILL BEGIN IMMEDIATELY AFTER COMMISSIONERS COURT ADJOURNS

WORKSHOP AGENDA

Discuss the 1115 Waiver Program presented by Gjerset & Lorenz, LLC.

Appearances before Commissioners Court

A speaker whose subject matter as submitted relates to an identifiable item of business on this agenda will be requested by the County Judge or other presiding court member to come to the podium where they will be limited to three minutes (3). A speaker whose subject matter as submitted does not relate to an identifiable item of business on this agenda will be limited to three minutes (3) and will be allowed to speak before the meeting is adjourned. Please arrive prior to the meeting and sign in with the County Clerk.

***

AGENDA ITEM #1

THE COUNTY OF GALVESTON

COUNTY AUDITOR'S OFFICE
P O Box 1418
GALVESTON, TEXAS 77553

Cliff Billingsley, CPA
County Auditor

Ron Chapa, CPA
First Assistant, Director of Auditing

Jeff Modzelewski, CPA
First Assistant, Director of Accounting

First Assistant, I T Systems
LaToya Jordan

Honorable Judge Mark Henry
And Members of the Commissioners' Court
Galveston County Courthouse
Galveston, Texas

August 21, 2012

I hand you the following items for action at the meeting of Commissioners' Court

Approval of Accounts Payable Checks dated 8/14/12 and 8/21/12

Order for Payroll period ending 8/15/2012 Bi-Weekly #17

Internal audit review of the invoices regarding the CDBG Non-Housing Grant as of March 31, 2012 and response letter from Mel Trammell, Director of Finance

Internal audit report for the surprise cash count performed on July 16, 2012 for the County Parks Department

Order for Health Insurance claims made by Boon Chapman for the months ending

- March 31, 2012
- April 30, 2012
- May 31, 2012
- June 30, 2012

Cliff Billingsley
County Auditor

AGENDA ITEM #1a

Galveston County, Texas

List of County Auditor's Approved Claims For Voucher Warrants Dated 08/14/2012

Invoice Number	Account Info		Amount
FUND: 1101	**General Fund**		
Warrant #: VW 00000459		**Payee Name: CLASSIC AUTOPLEX GALVESTON**	
73695	1101211101 - 5423110	Administration Sheriff Dept - Auto Maintenance	651 42
73758	1101211101 - 5423110	Administration Sheriff Dept - Auto Maintenance	112 44
		Warrant Total:	**763.86**
Warrant #: VW 00000460		**Payee Name: GALVESTON NEWSPAPERS INC**	
13103617	1101126100 - 5310000	District Clerk - Supplies and Materials	238 28
13105364 073112	1101110000 - 5493102	General Government - Advertising Costs-Sheriff Sale	22,135 00
300778243	1101151800 - 5493101	Purchasing Agent - Legal Advertising	527 88
300778302	1101151800 - 5493101	Purchasing Agent - Legal Advertising	625 16
300778595	1101151800 - 5493101	Purchasing Agent - Legal Advertising	625 16
300778986	1101151800 - 5493101	Purchasing Agent - Legal Advertising	620 04
300779294	1101151800 - 5493101	Purchasing Agent - Legal Advertising	533 88
		Warrant Total:	**25,305.40**
Warrant #: VW 00358660		**Payee Name: ABL MANAGEMENT INC**	
191616	1101211133 - 5481200	Sheriff-Corrections - Jail Food Service Contract	18,244 12
191617	1101211133 - 5481200	Sheriff-Corrections - Jail Food Service Contract	18,171 61
		Warrant Total:	**36,415.73**
Warrant #: VW 00358664		**Payee Name: ALERT ALARM BURG AND FIRE PROT INC**	
704360	1101170100 - 5481000	Facilities Srvs & Maintenance - Contract Service	120 00
		Warrant Total:	**120.00**
Warrant #: VW 00358668		**Payee Name: ARNOLD SUPPLY INC**	
045059	1101170100 - 5424000	Facilities Srvs & Maintenance - Maint & Repairs Buildings	517 22
		Warrant Total:	**517.22**
Warrant #: VW 00358670		**Payee Name: B.L. ALEXANDER ENTERPRISES INC**	
8856	1101170100 - 5424000	Facilities Srvs & Maintenance - Maint & Repairs Buildings	145 00
		Warrant Total:	**145.00**
Warrant #: VW 00358672		**Payee Name: BAY OIL CO CORP**	
203908	1101172111 - 5322010	Fleet Mgmt-Galveston - Auto Fuel Expense	2,886 32
204148	1101172111 - 5322010	Fleet Mgmt-Galveston - Auto Fuel Expense	4,686 13
		Warrant Total:	**7,572.45**
Warrant #: VW 00358676		**Payee Name: BFI WASTE SERVICES OF TEXAS LP**	
0855000537270	1101170100 - 5481000	Facilities Srvs & Maintenance - Contract Service	223 22
		Warrant Total:	**223.22**
Warrant #: VW 00358678		**Payee Name: BOLIVAR PENINSULA SPECIAL UTILITY**	
10002205 072312	1101170100 - 5421100	Facilities Srvs & Maintenance - Water	240 45
10002222 072312	1101170100 - 5421100	Facilities Srvs & Maintenance - Water	46 23
10002875 071612	1101170100 - 5421100	Facilities Srvs & Maintenance - Water	942 19
10004583 071112	1101170100 - 5421100	Facilities Srvs & Maintenance - Water	69 35
10005389 071612	1101170100 - 5421100	Facilities Srvs & Maintenance - Water	335 17
1003863 072712	1101170100 - 5421100	Facilities Srvs & Maintenance - Water	131 66
		Warrant Total:	**1,765.05**

Galveston County, Texas

List of County Auditor's Approved Claims For Voucher Warrants Dated 08/14/2012

Invoice Number	Account Info		Amount
Warrant #: VW 00358679	**Payee Name: BOSWORTH PAPERS INC**		
1318346	1101159100 - 5310000	Information Technology - Supplies and Materials	1,043 28
1319158	1101159100 - 5310000	Information Technology - Supplies and Materials	806 35
1319876	1101159100 - 5310000	Information Technology - Supplies and Materials	138.00
		Warrant Total:	**1,987.63**
Warrant #: VW 00358681	**Payee Name: C JOHNNY ON THE SPOT INC**		
2479	1101522020 - 5426181	Parks Department - Rental Porta Cans	150 00
2550	1101544042 - 5426181	Beach Maintenance-Rd & Bridge - Rental Porta Cans	80 00
2551	1101522020 - 5426181	Parks Department - Rental Porta Cans	50 10
2552	1101610200 - 5481000	County Extension - Contract Service	60 00
2555	1101522020 - 5426181	Parks Department - Rental Porta Cans	80 00
2556	1101522020 - 5426181	Parks Department - Rental Porta Cans	80 00
2557	1101522020 - 5426181	Parks Department - Rental Porta Cans	80 00
2558	1101522020 - 5426181	Parks Department - Rental Porta Cans	80 00
2560	1101522020 - 5426181	Parks Department - Rental Porta Cans	130 00
2561	1101522020 - 5426181	Parks Department - Rental Porta Cans	230 00
2562	1101522020 - 5426181	Parks Department - Rental Porta Cans	80 00
2563	1101522020 - 5426181	Parks Department - Rental Porta Cans	50 00
2564	1101522020 - 5426181	Parks Department - Rental Porta Cans	60 00
2566	1101544042 - 5426181	Beach Maintenance-Rd & Bridge - Rental Porta Cans	160 00
2567	1101544042 - 5426181	Beach Maintenance-Rd & Bridge - Rental Porta Cans	80 00
2568	1101544042 - 5426181	Beach Maintenance-Rd & Bridge - Rental Porta Cans	80 00
2569	1101544042 - 5426181	Beach Maintenance-Rd & Bridge - Rental Porta Cans	160 00
2570	1101544042 - 5426181	Beach Maintenance-Rd & Bridge - Rental Porta Cans	80 00
2571	1101544042 - 5426181	Beach Maintenance-Rd & Bridge - Rental Porta Cans	80 00
2572	1101544042 - 5426181	Beach Maintenance-Rd & Bridge - Rental Porta Cans	80 00
2573	1101544042 - 5426181	Beach Maintenance-Rd & Bridge - Rental Porta Cans	80 00
2574	1101544042 - 5426181	Beach Maintenance-Rd & Bridge - Rental Porta Cans	80 00
2575	1101544042 - 5426181	Beach Maintenance-Rd & Bridge - Rental Porta Cans	80 00
2576	1101544042 - 5426181	Beach Maintenance-Rd & Bridge - Rental Porta Cans	80 00
2577	1101544042 - 5426181	Beach Maintenance-Rd & Bridge - Rental Porta Cans	80 00
2578	1101544042 - 5426181	Beach Maintenance-Rd & Bridge - Rental Porta Cans	70 00
2579	1101544042 - 5426181	Beach Maintenance-Rd & Bridge - Rental Porta Cans	70 00
2580	1101522020 - 5426181	Parks Department - Rental Porta Cans	80 00
2581	1101522020 - 5426181	Parks Department - Rental Porta Cans	240 00
		Warrant Total:	**2,790.10**
Warrant #: VW 00358683	**Payee Name: CAMERON, DONNA**		
7/22-26/12 TRVL	1101127100 - 5496301	District Attorney - Auto Mileage	245 31
		Warrant Total:	**245.31**
Warrant #: VW 00358684	**Payee Name: CDW GOVERNMENT INC**		
N354884	1101159100 - 5310001	Information Technology - Depart Supplies-Non Cap FFE	76 22
		Warrant Total:	**76.22**
Warrant #: VW 00358685	**Payee Name: CENTERPOINT ENERGY**		
47632666 073112	1101170100 - 5421300	Facilities Srvs & Maintenance - Gas	63 01
48482202 080112	1101170100 - 5421300	Facilities Srvs & Maintenance - Gas	38 26
89106207 073112	1101170100 - 5421300	Facilities Srvs & Maintenance - Gas	16 65
		Warrant Total:	**117.92**
Warrant #: VW 00358686	**Payee Name: CHCA MAINLAND LP**		

Galveston County, Texas

List of County Auditor's Approved Claims For Voucher Warrants Dated 08/14/2012

Invoice Number	Account Info		Amount
3724 05/31/12	1101155000 - 5412102	Human Resources - Drug Screens/Psychological Exm	30 00
6390 05/31/12	1101155000 - 5412110	Human Resources - Pre-Employment Physicals	300 00
6390 4/30/12	1101155000 - 5412110	Human Resources - Pre-Employment Physicals	120 00
		Warrant Total:	**450.00**

Warrant #: VW 00358689 **Payee Name: CHILDRENS CENTER INC, THE**

FCC073112	1101440100 - 5449101	Community Services - Childrens Counseling Serv	14,220 00
		Warrant Total:	**14,220.00**

Warrant #: VW 00358690 **Payee Name: CITY OF GALVESTON**

362550	1101443100 - 5447200	Indigent Care & Medication - Emergency Assistance	100 00
411550	1101443100 - 5447200	Indigent Care & Medication - Emergency Assistance	73 53
		Warrant Total:	**173.53**

Warrant #: VW 00358691 **Payee Name: CITY OF LA MARQUE**

0160010854 80112	1101170100 - 5421100	Facilities Srvs & Maintenance - Water	68 50
110003415 080112	1101170100 - 5421100	Facilities Srvs & Maintenance - Water	191 32
160010852 080112	1101170100 - 5421100	Facilities Srvs & Maintenance - Water	40 95
160010853 080112	1101170100 - 5421100	Facilities Srvs & Maintenance - Water	14 55
		Warrant Total:	**315.32**

Warrant #: VW 00358692 **Payee Name: CITY OF LAMARQUE**

0401650000009	1101443100 - 5447200	Indigent Care & Medication - Emergency Assistance	100 00
		Warrant Total:	**100.00**

Warrant #: VW 00358694 **Payee Name: CITY OF TEXAS CITY**

1960974052 73112	1101170100 - 5421100	Facilities Srvs & Maintenance - Water	139 13
1961074053 73112	1101170100 - 5421100	Facilities Srvs & Maintenance - Water	6 75
1962374083 0712	1101443100 - 5447200	Indigent Care & Medication - Emergency Assistance	100 02
2456684883	1101443100 - 5447200	Indigent Care & Medication - Emergency Assistance	42 84
2801678663 73112	1101170100 - 5421100	Facilities Srvs & Maintenance - Water	212 12
2801778663 73112	1101170100 - 5421100	Facilities Srvs & Maintenance - Water	95 84
		Warrant Total:	**596.70**

Warrant #: VW 00358698 **Payee Name: COX, ELAINE**

JUL 2012 MLG	1101443100 - 5496301	Indigent Care & Medication - Auto Mileage	36 08
		Warrant Total:	**36.08**

Warrant #: VW 00358702 **Payee Name: DIRECT ENERGY LP**

650956329 0712	1101443100 - 5447200	Indigent Care & Medication - Emergency Assistance	100 00
651802738 0712	1101443100 - 5447200	Indigent Care & Medication - Emergency Assistance	148 75
652575184 0712	1101443100 - 5447200	Indigent Care & Medication - Emergency Assistance	99 24
		Warrant Total:	**347.99**

Warrant #: VW 00358706 **Payee Name: ENTERGY**

3571159 073112	1101170100 - 5421200	Facilities Srvs & Maintenance - Electricity	248 34
3626535 073112	1101170100 - 5421200	Facilities Srvs & Maintenance - Electricity	5 00
		Warrant Total:	**253.34**

Warrant #: VW 00358707 **Payee Name: EZELL, ROGER**

7/23/12 MLG	1101127100 - 5496301	District Attorney - Auto Mileage	51 97
		Warrant Total:	**51.97**

Galveston County, Texas

List of County Auditor's Approved Claims For Voucher Warrants Dated 08/14/2012

Invoice Number	Account Info		Amount
Warrant #: VW 00358708	**Payee Name: FIRETRON INC**		
30474	1101170100 - 5424000	Facilities Srvs & Maintenance - Maint & Repairs Buildings	555 00
		Warrant Total:	**555.00**
Warrant #: VW 00358710	**Payee Name: FREEZE, JOHNNY J**		
6/27/12 MLS	1101127100 - 5496100	District Attorney - Travel and Education	68 00
		Warrant Total:	**68.00**
Warrant #: VW 00358711	**Payee Name: G & K SERVICES**		
1030117055	1101170100 - 5312101	Facilities Srvs & Maintenance - Uniform Expense	13 10
1030136103	1101544042 - 5312101	Beach Maintenance-Rd & Bridge - Uniform Expense	35 00
1030139621	1101451110 - 5426106	Senior Citizens - Uniform Leasing	35 00
		Warrant Total:	**83.10**
Warrant #: VW 00358713	**Payee Name: GALVESTON COUNTY HISTORY INC**		
3RD QTR 2012	1101513200 - 5504012	Galveston County Museum - Galv Co Historical Commission	7,100 00
		Warrant Total:	**7,100.00**
Warrant #: VW 00358714	**Payee Name: GALVESTON COUNTY WCID #8**		
0021730 071212	1101170100 - 5421100	Facilities Srvs & Maintenance - Water	9 45
0021740 071112	1101170100 - 5421100	Facilities Srvs & Maintenance - Water	74 38
0120240 071312	1101170100 - 5421100	Facilities Srvs & Maintenance - Water	155 10
217600 071212	1101170100 - 5421100	Facilities Srvs & Maintenance - Water	303 07
		Warrant Total:	**542.00**
Warrant #: VW 00358721	**Payee Name: GULF COAST COMPLETE MARINE SERVICE INC**		
2703	1101211143 - 5423104	Patrol Division - Maint/Repairs Boat	2,034 29
		Warrant Total:	**2,034.29**
Warrant #: VW 00358726	**Payee Name: INSIGHT PUBLIC SECTOR INC**		
1100274283	1101159100 - 5750010	Information Technology - Video Services	2,756 67
		Warrant Total:	**2,756.67**
Warrant #: VW 00358737	**Payee Name: KLEEN JANITORIAL SUPPLY COMPANY**		
2238	1101170100 - 5481000	Facilities Srvs & Maintenance - Contract Service	1,257 00
2242	1101170100 - 5481000	Facilities Srvs & Maintenance - Contract Service	802 94
		Warrant Total:	**2,059.94**
Warrant #: VW 00358740	**Payee Name: LEAL, RACHEL**		
JUN 2012 MLG	1101127100 - 5496301	District Attorney - Auto Mileage	32 33
		Warrant Total:	**32.33**
Warrant #: VW 00358741	**Payee Name: LIGGIOS TIRE AND SERVICE CENTER INC**		
185634	1101172111 - 5423110	Fleet Mgmt-Galveston - Auto Maintenance	439 74
185743	1101211101 - 5423110	Administration Sheriff Dept - Auto Maintenance	28 00
185748	1101211101 - 5423110	Administration Sheriff Dept - Auto Maintenance	424 92
185750	1101211101 - 5423110	Administration Sheriff Dept - Auto Maintenance	28 00
185786	1101211101 - 5423110	Administration Sheriff Dept - Auto Maintenance	28 00
185810	1101211101 - 5423110	Administration Sheriff Dept - Auto Maintenance	195 40
185814	1101211101 - 5423110	Administration Sheriff Dept - Auto Maintenance	22 86
185818	1101211101 - 5423110	Administration Sheriff Dept - Auto Maintenance	22 86
185831	1101211101 - 5423110	Administration Sheriff Dept - Auto Maintenance	28 00

Galveston County, Texas

List of County Auditor's Approved Claims For Voucher Warrants Dated 08/14/2012

Invoice Number	Account Info		Amount
185892	1101211101 - 5423110	Administration Sheriff Dept - Auto Maintenance	13 00
185903	1101211101 - 5423110	Administration Sheriff Dept - Auto Maintenance	13 00
185979	1101211101 - 5423110	Administration Sheriff Dept - Auto Maintenance	385 68
185992	1101211101 - 5423110	Administration Sheriff Dept - Auto Maintenance	117 92
186026	1101211101 - 5423110	Administration Sheriff Dept - Auto Maintenance	13 00
		Warrant Total:	**1,760.38**

Warrant #: VW 00358742 **Payee Name: LINEBARGER GOGGAN BLAIR & SAMPSON LLP**

JUL 12 JP1 FEES	1101000000 - 2291011	General Fund - Due to Collection Agency	475 70
JUL 12 JP3 FEES	1101000000 - 2291011	General Fund - Due to Collection Agency	2,312 96
		Warrant Total:	**2,788.66**

Warrant #: VW 00358743 **Payee Name: LISTER PLUMBING**

035798	1101170100 - 5424000	Facilities Srvs & Maintenance - Maint & Repairs Buildings	545 00
		Warrant Total:	**545.00**

Warrant #: VW 00358747 **Payee Name: MALELO AND COMPANY OHIO**

34339	1101211121 - 5310000	Sheriff-Criminal Investigation - Supplies and Materials	89 50
		Warrant Total:	**89.50**

Warrant #: VW 00358748 **Payee Name: MARTY'S CITY AUTO INC**

010934	1101211101 - 5423110	Administration Sheriff Dept - Auto Maintenance	45 00
		Warrant Total:	**45.00**

Warrant #: VW 00358753 **Payee Name: MOODY NATIONAL BANK**

MAY 2012 LOCKBOX	1101151500 - 5481000	Tax Assessor Collector - Contract Service	5,747 73
		Warrant Total:	**5,747.73**

Warrant #: VW 00358754 **Payee Name: MOODY NATIONAL BANK**

JUN 12 LOCKBOX	1101151500 - 5481000	Tax Assessor Collector - Contract Service	4,034 58
		Warrant Total:	**4,034.58**

Warrant #: VW 00358760 **Payee Name: ONEOK INC**

117946945 072412	1101170100 - 5421300	Facilities Srvs & Maintenance - Gas	58 86
14052660 072412	1101170100 - 5421300	Facilities Srvs & Maintenance - Gas	15 00
141057664 072412	1101170100 - 5421300	Facilities Srvs & Maintenance - Gas	15 00
163076745 072012	1101170100 - 5421300	Facilities Srvs & Maintenance - Gas	195 36
165199073 071912	1101170100 - 5421300	Facilities Srvs & Maintenance - Gas	2,887 85
235817809 071812	1101170100 - 5421300	Facilities Srvs & Maintenance - Gas	58 86
		Warrant Total:	**3,230.93**

Warrant #: VW 00358764 **Payee Name: PEREZ, OLDA**

JUL 2012 MLG	1101451110 - 5496301	Senior Citizens - Auto Mileage	40 15
		Warrant Total:	**40.15**

Warrant #: VW 00358765 **Payee Name: PINNACLE MEDICAL MANAGEMENT CORP**

42800	1101155000 - 5412102	Human Resources - Drug Screens/Psychological Exm	40 50
42878	1101155000 - 5412102	Human Resources - Drug Screens/Psychological Exm	190 50
42949	1101155000 - 5412102	Human Resources - Drug Screens/Psychological Exm	190 50
43130	1101155000 - 5412102	Human Resources - Drug Screens/Psychological Exm	81 00
43171	1101155000 - 5412102	Human Resources - Drug Screens/Psychological Exm	733 50
43293	1101155000 - 5412102	Human Resources - Drug Screens/Psychological Exm	190 50

Galveston County, Texas

List of County Auditor's Approved Claims For Voucher Warrants Dated 08/14/2012

Invoice Number	Account Info		Amount
		Warrant Total:	**1,426.50**
Warrant #: VW 00358766	**Payee Name: PINNACLE MEDICAL MANAGEMENT CORP**		
43236	1101155000 - 5412102	Human Resources - Drug Screens/Psychological Exm	679 50
		Warrant Total:	**679.50**
Warrant #: VW 00358770	**Payee Name: PRECISION DYNAMICS CORP**		
974121	1101211133 - 5310000	Sheriff-Corrections - Supplies and Materials	380 00
		Warrant Total:	**380.00**
Warrant #: VW 00358771	**Payee Name: PRODUCTIVITY CENTER INC**		
GCCP34112	1101223300 - 5310000	Constable Pct #3 - Rose - Supplies and Materials	295 00
		Warrant Total:	**295.00**
Warrant #: VW 00358775	**Payee Name: ROBINSON III, VIRGIL SMITH**		
M60120344	1101000000 - 1142009	General Fund - Undist Fees JP 6 (prev #9)	30 00
		Warrant Total:	**30.00**
Warrant #: VW 00358779	**Payee Name: SANTA FE AUTO PARTS INC**		
98079	1101172111 - 5423110	Fleet Mgmt-Galveston - Auto Maintenance	87 11
98899	1101211101 - 5423110	Administration Sheriff Dept - Auto Maintenance	112 27
		Warrant Total:	**199.38**
Warrant #: VW 00358780	**Payee Name: SEASIDE ENTERPRISES INC**		
209524	1101544042 - 5310000	Beach Maintenance-Rd & Bridge - Supplies and Materials	73 91
		Warrant Total:	**73.91**
Warrant #: VW 00358782	**Payee Name: SHERWIN WILLIAMS PAINT CORP**		
86220	1101522020 - 5424000	Parks Department - Maint & Repairs Buildings	-11 70
89736	1101522020 - 5424000	Parks Department - Maint & Repairs Buildings	170 80
		Warrant Total:	**159.10**
Warrant #: VW 00358783	**Payee Name: SHI GOVT SOLUTIONS**		
GB00052775	1101159100 - 5752005	Information Technology - Sharepoint/Web Site Upgrade	19,898 45
GB00055105	1101159100 - 5752005	Information Technology - Sharepoint/Web Site Upgrade	11,959 73
		Warrant Total:	**31,858.18**
Warrant #: VW 00358784	**Payee Name: SIEMENS BUILDING TECHNOLOGIES INC**		
5442511237	1101170100 - 5424000	Facilities Srvs & Maintenance - Maint & Repairs Buildings	325 00
		Warrant Total:	**325.00**
Warrant #: VW 00358786	**Payee Name: SOLUTIONS4SURE.COM INC**		
B120612149V2	1101159100 - 5310001	Information Technology - Depart Supplies-Non Cap FFE	60 24
B12073491V1	1101159100 - 5310001	Information Technology - Depart Supplies-Non Cap FFE	743 14
		Warrant Total:	**803.38**
Warrant #: VW 00358796	**Payee Name: TECHNIQUE DATA SYSTEMS**		
036370	1101151500 - 5481000	Tax Assessor Collector - Contract Service	575 00
036371	1101151500 - 5481000	Tax Assessor Collector - Contract Service	1,800 00
		Warrant Total:	**2,375.00**
Warrant #: VW 00358798	**Payee Name: TEXAS AGRILIFE EXTENSION**		

Galveston County, Texas

List of County Auditor's Approved Claims For Voucher Warrants Dated 08/14/2012

Invoice Number	Account Info		Amount
11/12-11/14/12	1101151500 - 5495100	Tax Assessor Collector - Education	155 00
CONFERENCE WILLI	1101151500 - 5495100	Tax Assessor Collector - Education	155 00
		Warrant Total:	**310.00**
Warrant #: VW 00358799	**Payee Name: TEXAS COMMISSION ON LAW ENFORCEMENT**		
POLANCO CERTIFIC	1101223200 - 5496100	Constable Pct #2 - Petteway - Travel and Education	35 00
		Warrant Total:	**35.00**
Warrant #: VW 00358802	**Payee Name: TEXAS WORKFORCE COMMISSION**		
PC2205	1101159100 - 5481000	Information Technology - Contract Service	1,500 00
		Warrant Total:	**1,500.00**
Warrant #: VW 00358805	**Payee Name: TREE-MENDUS**		
JUL 24 2012	1101522020 - 5428010	Parks Department - Forestry Services	1,250 00
		Warrant Total:	**1,250.00**
Warrant #: VW 00358807	**Payee Name: TYLER TECHNOLOGIES - THE SOFTWARE**		
0202545	1101159100 - 5754103	Information Technology - JLE Project	84,690 00
		Warrant Total:	**84,690.00**
Warrant #: VW 00358808	**Payee Name: UNITED PARCEL SERVICE**		
0000135W56312	1101159100 - 5481000	Information Technology - Contract Service	12 39
0000135W65312	1101159100 - 5481000	Information Technology - Contract Service	-1 00
000014217W312	1101159100 - 5481000	Information Technology - Contract Service	16 45
		Warrant Total:	**27.84**
Warrant #: VW 00358812	**Payee Name: VOICE4NET.COM**		
3300B	1101159100 - 5481000	Information Technology - Contract Service	50.00
		Warrant Total:	**50.00**
Warrant #: VW 00358814	**Payee Name: WASTE MANAGEMENT INC**		
166266017911	1101170100 - 5481000	Facilities Srvs & Maintenance - Contract Service	4,703 13
		Warrant Total:	**4,703.13**
		FUND 1101 TOTAL:	**259,274.22**

FUND: 2131 DA Seized Funds Afte Aft 10/89

Warrant #: VW 00358683	**Payee Name: CAMERON, DONNA**		
7/22-26/12 TRVL	2131127132 - 5495112	DA Seized Funds Afte Aft 10/89 - Training	333 14
		Warrant Total:	**333.14**
Warrant #: VW 00358806	**Payee Name: TRIALFUSION LLC**		
TF201105	2131127132 - 5310000	DA Seized Funds Afte Aft 10/89 - Supplies and Materials	3,000 00
		Warrant Total:	**3,000.00**
		FUND 2131 TOTAL:	**3,333.14**

FUND: 2220 Adult Probation Fund

Warrant #: VW 00358666 **Payee Name: ALZAFARI, ERIC**

Galveston County, Texas

List of County Auditor's Approved Claims For Voucher Warrants Dated 08/14/2012

Invoice Number	Account Info		Amount
JUL 2012 MLG	2220255100 - 5496100	Adult Probation - Travel and Education	111 00
		Warrant Total:	**111.00**
Warrant #: VW 00358680	**Payee Name: BOZEMAN, KELLY**		
7/23-26/12 MLG	2220255100 - 5496100	Adult Probation - Travel and Education	223 67
		Warrant Total:	**223.67**
Warrant #: VW 00358695	**Payee Name: CLARK, GREGORY W.**		
JUL 2012 MLG	2220255100 - 5496100	Adult Probation - Travel and Education	157 07
		Warrant Total:	**157.07**
Warrant #: VW 00358700	**Payee Name: DICKEY, ROCHELL**		
JUL 2012 MLG	2220255100 - 5496100	Adult Probation - Travel and Education	152 07
		Warrant Total:	**152.07**
Warrant #: VW 00358723	**Payee Name: HENDERSON, ANTHONY**		
JUL 2012 MLG	2220255100 - 5496100	Adult Probation - Travel and Education	116 55
		Warrant Total:	**116.55**
Warrant #: VW 00358731	**Payee Name: JAMES, RODERICK**		
7/2326/12 TRVL	2220255100 - 5496100	Adult Probation - Travel and Education	294 30
		Warrant Total:	**294.30**
Warrant #: VW 00358734	**Payee Name: JONES, CHARLOTTE**		
JUL 2012 MLG	2220255100 - 5496100	Adult Probation - Travel and Education	122 66
		Warrant Total:	**122.66**
Warrant #: VW 00358735	**Payee Name: JUAREZ, JENNIFER**		
JUL 2012 MLG	2220255100 - 5496100	Adult Probation - Travel and Education	173 16
		Warrant Total:	**173.16**
Warrant #: VW 00358751	**Payee Name: MCNAIR, COREY**		
JUL 2012 MLG	2220255100 - 5496100	Adult Probation - Travel and Education	98 79
		Warrant Total:	**98.79**
Warrant #: VW 00358752	**Payee Name: MILLER, JARVIS**		
JUL 2012 TRVL	2220255100 - 5496100	Adult Probation - Travel and Education	248 59
		Warrant Total:	**248.59**
Warrant #: VW 00358759	**Payee Name: OLALEKAN, JAMES**		
7/25-26/12 MLG	2220255100 - 5496100	Adult Probation - Travel and Education	156 51
JUL 2012 MLG	2220255100 - 5496100	Adult Probation - Travel and Education	54.95
		Warrant Total:	**211.46**
Warrant #: VW 00358776	**Payee Name: RODRIGUEZ, VANESSA**		
JUL 2012 MLG	2220255100 - 5496100	Adult Probation - Travel and Education	72 71
		Warrant Total:	**72.71**
Warrant #: VW 00358778	**Payee Name: ROSEMON, VANESSA R**		
07/25-27/12 TRVL	2220255100 - 5496100	Adult Probation - Travel and Education	198 07
JUL 2012 MLG	2220255100 - 5496100	Adult Probation - Travel and Education	187 04

Galveston County, Texas

List of County Auditor's Approved Claims For Voucher Warrants Dated 08/14/2012

Invoice Number	Account Info		Amount
		Warrant Total:	**385.11**
Warrant #: VW 00358785	**Payee Name: SKUFCA, RICHARD**		
JUL 2012 MLG	2220255100 - 5496100	Adult Probation - Travel and Education	24 42
		Warrant Total:	**24.42**
Warrant #: VW 00358803	**Payee Name: THOMPSON, SHELLY**		
JUL 2012 MLG	2220255100 - 5496100	Adult Probation - Travel and Education	94 90
		Warrant Total:	**94.90**
Warrant #: VW 00358811	**Payee Name: VILLARREAL, NORMA**		
JUL 2012 MLG	2220255100 - 5496100	Adult Probation - Travel and Education	74 37
		Warrant Total:	**74.37**
Warrant #: VW 00358815	**Payee Name: WATERWALL, CHASE**		
JUL 2012 MLG	2220255100 - 5496100	Adult Probation - Travel and Education	167 06
		Warrant Total:	**167.06**
Warrant #: VW 00358817	**Payee Name: WILLIAMS, NICKISHA**		
JUL 2012 MLG	2220255100 - 5496100	Adult Probation - Travel and Education	144 86
		Warrant Total:	**144.86**
		FUND 2220 TOTAL:	**2,872.75**

FUND: 2230 Juvenile Justice Fund

Warrant #: VW 00358659	**Payee Name: 4M YOUTH SERVICES INC**		
JULY 2012	2230256100 - 5441301	Juvenile Justice - Placement Services	54 00
		Warrant Total:	**54.00**
Warrant #: VW 00358660	**Payee Name: ABL MANAGEMENT INC**		
195887	2230256118 - 5314301	Detention - Kitchen Supplies	120 48
195887	2230256118 - 5481199	Detention - Food Service Contract	2,150 12
195887	2230256119 - 5481199	Post Program - Food Service Contract	804 24
		Warrant Total:	**3,074.84**
Warrant #: VW 00358669	**Payee Name: ARTIS, FARRELL**		
8/6-7/12	2230256105 - 5495100	Juv Justice - Administration - Education	3,368 00
		Warrant Total:	**3,368.00**
Warrant #: VW 00358701	**Payee Name: DICKINSON IND SCHOOL DISTRICT**		
CM11222	2230256155 - 5481000	Juv Justice Alt Ed Program - Contract Service	5,727 71
DETENTION PROGR	2230256118 - 5481000	Detention - Contract Service	135,755 12
		Warrant Total:	**141,482.83**
Warrant #: VW 00358709	**Payee Name: FLEETCOR TECHNOLOGIES DBA CHEVRON**		
35276371	2230256105 - 5423112	Juv Justice - Administration - Auto Credit Card Exp	143 26
		Warrant Total:	**143.26**
Warrant #: VW 00358712	**Payee Name: GALVESTON COUNTY HEALTH DISTRICT**		
3179	2230256100 - 5499350	Juvenile Justice - Reimb for Crt Ord Birth Certif	23 00

Galveston County, Texas

List of County Auditor's Approved Claims For Voucher Warrants Dated 08/14/2012

Invoice Number	Account Info		Amount
		Warrant Total:	**23.00**
Warrant #: VW 00358715	**Payee Name: GAVION, BRIAN**		
JUL 2012 MLG	2230256100 - 5496301	Juvenile Justice - Auto Mileage	29 97
		Warrant Total:	**29.97**
Warrant #: VW 00358741	**Payee Name: LIGGIOS TIRE AND SERVICE CENTER INC**		
185767	2230256105 - 5423110	Juv Justice - Administration - Auto Maintenance	13 00
185987	2230256105 - 5423110	Juv Justice - Administration - Auto Maintenance	410 68
		Warrant Total:	**423.68**
Warrant #: VW 00358749	**Payee Name: MASTER WORD SERVICE INC**		
52405	2230256130 - 5431101	Court - Professional Srv Interpreter	420 04
		Warrant Total:	**420.04**
Warrant #: VW 00358758	**Payee Name: NORRIS, BRENT T**		
JULY 2012 MLG	2230256105 - 5496301	Juv Justice - Administration - Auto Mileage	66.05
		Warrant Total:	**66.05**
Warrant #: VW 00358774	**Payee Name: RAMIREZ, VICTORIA**		
JULY 2012 MLG	2230256100 - 5496301	Juvenile Justice - Auto Mileage	185 93
		Warrant Total:	**185.93**
Warrant #: VW 00358784	**Payee Name: SIEMENS BUILDING TECHNOLOGIES INC**		
5442513870	2230256105 - 5401010	Juv Justice - Administration - Smoke Alarm Contract	14,631 00
		Warrant Total:	**14,631.00**
Warrant #: VW 00358813	**Payee Name: WALMART**		
00760	2230256118 - 5316011	Detention - Pharmaceuticals Supplies	7 98
		Warrant Total:	**7.98**
Warrant #: VW 00358818	**Payee Name: WILLINGHAM, GARY**		
CM12174	2230256155 - 5481000	Juv Justice Alt Ed Program - Contract Service	288 00
		Warrant Total:	**288.00**
Warrant #: VW 00358819	**Payee Name: WINDSHIELD DOCTOR**		
7740	2230256105 - 5423110	Juv Justice - Administration - Auto Maintenance	260 00
		Warrant Total:	**260.00**
		FUND 2230 TOTAL:	**164,458.58**

FUND: 2260 Emergency Management Fund

Warrant #: VW 00358697	**Payee Name: COASTAL STRATEGIES GROUP**		
13	2260291045 - 5481000	Coastal Erosion Study - Contract Service	1,066 05
		Warrant Total:	**1,066.05**
		FUND 2260 TOTAL:	**1,066.05**

FUND: 2301 Road & Bridge Fund

Galveston County, Texas

List of County Auditor's Approved Claims For Voucher Warrants Dated 08/14/2012

Invoice Number	Account Info		Amount
Warrant #: VW 00358665	**Payee Name: ALWAYS SAFETY AND 1ST AID INC**		
29632	2301312120 - 5310000	FM & Lateral Road - Supplies and Materials	566 45
		Warrant Total:	**566.45**
Warrant #: VW 00358671	**Payee Name: BACLIFF BUILDERS SUPPLY INC.**		
11466	2301312120 - 5310000	FM & Lateral Road - Supplies and Materials	30 76
		Warrant Total:	**30.76**
Warrant #: VW 00358672	**Payee Name: BAY OIL CO CORP**		
203907	2301312120 - 5322010	FM & Lateral Road - Auto Fuel Expense	7,246 73
205827	2301312120 - 5322010	FM & Lateral Road - Auto Fuel Expense	104 65
		Warrant Total:	**7,351.38**
Warrant #: VW 00358676	**Payee Name: BFI WASTE SERVICES OF TEXAS LP**		
311907	2301312120 - 5421411	FM & Lateral Road - Garbage/Landfill Services	1,620 05
		Warrant Total:	**1,620.05**
Warrant #: VW 00358681	**Payee Name: C JOHNNY ON THE SPOT INC**		
2554	2301312110 - 5481000	Administration - Contract Service	100 00
		Warrant Total:	**100.00**
Warrant #: VW 00358687	**Payee Name: CHEMAX CORPORATION**		
23731	2301312120 - 5310000	FM & Lateral Road - Supplies and Materials	281 90
		Warrant Total:	**281.90**
Warrant #: VW 00358688	**Payee Name: CHERRY CRUSHED CONCRETE**		
1019512	2301312120 - 5353014	FM & Lateral Road - Materials Flexible Base	3,116 50
1019611	2301312120 - 5353014	FM & Lateral Road - Materials Flexible Base	3,252 54
1019762	2301312120 - 5353014	FM & Lateral Road - Materials Flexible Base	3,198 60
1019916	2301312120 - 5353014	FM & Lateral Road - Materials Flexible Base	3,224.62
1019917	2301312120 - 5353014	FM & Lateral Road - Materials Flexible Base	842.01
1020041	2301312120 - 5353014	FM & Lateral Road - Materials Flexible Base	3,270.76
1020042	2301312120 - 5353014	FM & Lateral Road - Materials Flexible Base	876 88
1020273	2301312120 - 5353014	FM & Lateral Road - Materials Flexible Base	450 20
1020440	2301312120 - 5353014	FM & Lateral Road - Materials Flexible Base	2,074 27
1020502	2301312120 - 5353014	FM & Lateral Road - Materials Flexible Base	3,260 11
1020607	2301312120 - 5353014	FM & Lateral Road - Materials Flexible Base	3,126 91
		Warrant Total:	**26,693.40**
Warrant #: VW 00358711	**Payee Name: G & K SERVICES**		
1030136104	2301312120 - 5312101	FM & Lateral Road - Uniform Expense	55 16
		Warrant Total:	**55.16**
Warrant #: VW 00358724	**Payee Name: HI-WAY EQUIPMENT COMPANY LLC**		
H40194	2301312120 - 5423000	FM & Lateral Road - Maint/Repairs Equipment	1,798 96
		Warrant Total:	**1,798.96**
Warrant #: VW 00358725	**Payee Name: HOME DEPOT**		
7022929	2301312120 - 5310000	FM & Lateral Road - Supplies and Materials	29 97
		Warrant Total:	**29.97**
Warrant #: VW 00358737	**Payee Name: KLEEN JANITORIAL SUPPLY COMPANY**		

Galveston County, Texas

List of County Auditor's Approved Claims For Voucher Warrants Dated 08/14/2012

Invoice Number	Account Info		Amount
2234	2301312120 - 5310000	FM & Lateral Road - Supplies and Materials	274 20
		Warrant Total:	**274.20**
Warrant #: VW 00358741	**Payee Name: LIGGIOS TIRE AND SERVICE CENTER INC**		
186010	2301312120 - 5423000	FM & Lateral Road - Maint/Repairs Equipment	34 00
		Warrant Total:	**34.00**
Warrant #: VW 00358772	**Payee Name: R B EVERETT & CO**		
S145349	2301312120 - 5423000	FM & Lateral Road - Maint/Repairs Equipment	135 37
S145350	2301312120 - 5423000	FM & Lateral Road - Maint/Repairs Equipment	90 88
		Warrant Total:	**226.25**
Warrant #: VW 00358779	**Payee Name: SANTA FE AUTO PARTS INC**		
98071	2301312120 - 5423000	FM & Lateral Road - Maint/Repairs Equipment	456 05
98194	2301312120 - 5423000	FM & Lateral Road - Maint/Repairs Equipment	5 00
98281	2301312120 - 5423000	FM & Lateral Road - Maint/Repairs Equipment	313 70
98349	2301312120 - 5423000	FM & Lateral Road - Maint/Repairs Equipment	26 64
98357	2301312120 - 5423000	FM & Lateral Road - Maint/Repairs Equipment	6 75
98417	2301312120 - 5423000	FM & Lateral Road - Maint/Repairs Equipment	4 28
98492	2301312120 - 5423000	FM & Lateral Road - Maint/Repairs Equipment	225 00
98515	2301312120 - 5423000	FM & Lateral Road - Maint/Repairs Equipment	160 14
98808	2301312120 - 5423000	FM & Lateral Road - Maint/Repairs Equipment	122 80
98974	2301312120 - 5423000	FM & Lateral Road - Maint/Repairs Equipment	369.00
99033	2301312120 - 5423000	FM & Lateral Road - Maint/Repairs Equipment	33 47
99034	2301312120 - 5423000	FM & Lateral Road - Maint/Repairs Equipment	502 92
99112	2301312120 - 5423000	FM & Lateral Road - Maint/Repairs Equipment	15 00
99158	2301312120 - 5423000	FM & Lateral Road - Maint/Repairs Equipment	34 80
		Warrant Total:	**2,275.55**
Warrant #: VW 00358780	**Payee Name: SEASIDE ENTERPRISES INC**		
217980	2301312120 - 5310000	FM & Lateral Road - Supplies and Materials	34 99
		Warrant Total:	**34.99**
Warrant #: VW 00358787	**Payee Name: SOUTHWEST T & I INC**		
1999132	2301312110 - 5481000	Administration - Contract Service	324 80
3126	2301312110 - 5481000	Administration - Contract Service	324 80
		Warrant Total:	**649.60**
Warrant #: VW 00358813	**Payee Name: WALMART**		
001901 O/PYMT	2301312110 - 5310000	Administration - Supplies and Materials	-11 73
06832	2301312110 - 5310000	Administration - Supplies and Materials	19 92
		Warrant Total:	**8.19**
		FUND 2301 TOTAL:	**42,030.81**

FUND: 2370 Flood Control Fund

Warrant #: VW 00358661	**Payee Name: ACT PIPE AND SUPPLY INC**		
678699	2370296100 - 5353013	Flood Control - Materials Culverts/Bridges	4,368 00
		Warrant Total:	**4,368.00**
Warrant #: VW 00358676	**Payee Name: BFI WASTE SERVICES OF TEXAS LP**		

Galveston County, Texas

List of County Auditor's Approved Claims For Voucher Warrants Dated 08/14/2012

Invoice Number	Account Info		Amount
0855000537180	2370296121 - 5481000	Seawall Maintenance - Contract Service	71 50
		Warrant Total:	**71.50**
Warrant #: VW 00358681	**Payee Name: C JOHNNY ON THE SPOT INC**		
2553	2370296121 - 5481000	Seawall Maintenance - Contract Service	100 00
		Warrant Total:	**100.00**
Warrant #: VW 00358688	**Payee Name: CHERRY CRUSHED CONCRETE**		
1018524	2370296100 - 5353013	Flood Control - Materials Culverts/Bridges	846.57
		Warrant Total:	**846.57**
Warrant #: VW 00358704	**Payee Name: ECO SEAL LLC**		
0412012	2370296121 - 5423401	Seawall Maintenance - Maint/Repairs Pumps & Gates	4,750 00
		Warrant Total:	**4,750.00**
Warrant #: VW 00358745	**Payee Name: MAINLAND TOOL AND SUPPLY INC**		
0141781101	2370296121 - 5310000	Seawall Maintenance - Supplies and Materials	95 98
		Warrant Total:	**95.98**
		FUND 2370 TOTAL:	**10,232.05**

FUND: 2410 Mosquito Control District Fund

Warrant #: VW 00358662	**Payee Name: ADAPCO INC**		
89953	2410411100 - 5423101	Mosquito Control District - Maint/Repairs Aircraft	78 10
89957	2410411100 - 5310000	Mosquito Control District - Supplies and Materials	215 71
		Warrant Total:	**293.81**
Warrant #: VW 00358672	**Payee Name: BAY OIL CO CORP**		
202593	2410411100 - 5322010	Mosquito Control District - Auto Fuel Expense	5,376 45
		Warrant Total:	**5,376.45**
Warrant #: VW 00358804	**Payee Name: TIBALDOS FEED AND SUPPLY**		
390871	2410411100 - 5310000	Mosquito Control District - Supplies and Materials	91 90
		Warrant Total:	**91.90**
Warrant #: VW 00358809	**Payee Name: UNIVAR USA**		
HS766938	2410411100 - 5313301	Mosquito Control District - Insecticides	6,788 00
		Warrant Total:	**6,788.00**
Warrant #: VW 00358813	**Payee Name: WALMART**		
05861	2410411100 - 5310000	Mosquito Control District - Supplies and Materials	22 29
07253	2410411100 - 5310000	Mosquito Control District - Supplies and Materials	23 09
		Warrant Total:	**45.38**
		FUND 2410 TOTAL:	**12,595.54**

FUND: 2823 Criminal Justice Grant Fund

Warrant #: VW 00358720	**Payee Name: GULF COAST CENTER**		
2	2823255114 - 5481000	Diversion Program Gulf Coast - Contract Service	2,510 00

Galveston County, Texas

List of County Auditor's Approved Claims For Voucher Warrants Dated 08/14/2012

Invoice Number	Account Info		Amount
		Warrant Total:	**2,510.00**
		FUND 2823 TOTAL:	**2,510.00**

FUND: 2824 Adult Probation Community

Warrant #: VW 00358719 **Payee Name: GRANGER, ROSSLYN N**

JUNE 2012	2824255136 - 5481000	Sex Offender Supervision - Contract Service	510 00
		Warrant Total:	**510.00**

Warrant #: VW 00358738 **Payee Name: KLYNG, KERRY**

JUL 2012 MLG	2824255136 - 5496301	Sex Offender Supervision - Auto Mileage	119 88
		Warrant Total:	**119.88**
		FUND 2824 TOTAL:	**629.88**

FUND: 2825 Galv Cnty Adult Drug Court Pgm

Warrant #: VW 00358699 **Payee Name: D'AMBRA, LINDA**

JUL 2012 MLG	2825255117 - 5496100	Galv Cnty Adult Drug Court Pgm - Travel and Education	57 72
		Warrant Total:	**57.72**
		FUND 2825 TOTAL:	**57.72**

FUND: 2841 Juvenile Probation-State Aid

Warrant #: VW 00358659 **Payee Name: 4M YOUTH SERVICES INC**

JULY 2012	2841256110 - 5441101	State Aid Grant A - Residential Services	2,646 00
		Warrant Total:	**2,646.00**

Warrant #: VW 00358663 **Payee Name: ALERE TOXICOLOGY SERVICES INC.**

808742	2841256110 - 5412301	State Aid Grant A - Drug Screening	12 00
		Warrant Total:	**12.00**

Warrant #: VW 00358677 **Payee Name: BLOW, ADRIENNE M**

JUL 2012 MLG	2841256124 - 5496301	Co Cash Match - St Aid A - Auto Mileage	140 97
		Warrant Total:	**140.97**

Warrant #: VW 00358701 **Payee Name: DICKINSON IND SCHOOL DISTRICT**

CM11203	2841256110 - 5495095	State Aid Grant A - Educational Programs	42,635 21
CM11222	2841256110 - 5495095	State Aid Grant A - Educational Programs	4,455 56
DETENTION PROGR	2841256110 - 5495095	State Aid Grant A - Educational Programs	16,489 23
		Warrant Total:	**63,580.00**

Warrant #: VW 00358705 **Payee Name: EFFINGER, ERIKA**

JUL 2012 MLG	2841256124 - 5496301	Co Cash Match - St Aid A - Auto Mileage	89 91
		Warrant Total:	**89.91**

Warrant #: VW 00358720 **Payee Name: GULF COAST CENTER**

JULY 2012	2841256110 - 5436107	State Aid Grant A - Outpatient Counseling	679 63

Galveston County, Texas

List of County Auditor's Approved Claims For Voucher Warrants Dated 08/14/2012

Invoice Number	Account Info		Amount
		Warrant Total:	**679.63**
Warrant #: VW 00358722	**Payee Name: GULF COAST TRADES CENTER**		
5775	2841256110 - 5441101	State Aid Grant A - Residential Services	17,192 10
		Warrant Total:	**17,192.10**
Warrant #: VW 00358762	**Payee Name: PARISH, ERVIN R**		
JULY 2012 MLG	2841256124 - 5496301	Co Cash Match - St Aid A - Auto Mileage	132 65
		Warrant Total:	**132.65**
Warrant #: VW 00358763	**Payee Name: PEGASUS SCHOOLS INC**		
9649	2841256110 - 5441101	State Aid Grant A - Residential Services	7,742 00
		Warrant Total:	**7,742.00**
Warrant #: VW 00358781	**Payee Name: SHELTERING HARBOUR**		
JULY 2012	2841256110 - 5441101	State Aid Grant A - Residential Services	8,018 50
		Warrant Total:	**8,018.50**
		FUND 2841 TOTAL:	**100,233.76**

FUND: 2848 Juv Jst Alt Education Program

Warrant #: VW 00358701	**Payee Name: DICKINSON IND SCHOOL DISTRICT**		
CM11222	2848256158 - 5481000	JJAEP-Program I - Contract Service	92,272 00
		Warrant Total:	**92,272.00**
Warrant #: VW 00358720	**Payee Name: GULF COAST CENTER**		
JULY 2012	2848256144 - 5436107	Commitment Reduction Program C - Outpatient Counseling	8,506 70
		Warrant Total:	**8,506.70**
		FUND 2848 TOTAL:	**100,778.70**

FUND: 2864 Auto Crimes Task Force Grant

Warrant #: VW 00358795	**Payee Name: SUPERCIRCUITS INC**		
782980A	2864211126 - 5423110	Auto Crime Task Force - Auto Maintenance	381.22
		Warrant Total:	**381.22**
		FUND 2864 TOTAL:	**381.22**

FUND: 2892 State Homeland Security Grant

Warrant #: VW 00358755	**Payee Name: MOTOROLA SOLUTIONS INC**		
13909826	2892291119 - 5310000	2010 CCP Grant - Supplies and Materials	176 02
41169865	2892291119 - 5310000	2010 CCP Grant - Supplies and Materials	8,710 50
42034875	2892291119 - 5310000	2010 CCP Grant - Supplies and Materials	-176 02
		Warrant Total:	**8,710.50**

Galveston County, Texas

List of County Auditor's Approved Claims For Voucher Warrants Dated 08/14/2012

Invoice Number	Account Info		Amount
		FUND 2892 TOTAL:	**8,710.50**

FUND: 2893 HMGP - IKE

Warrant #: VW 00358756 **Payee Name: MOUTON, DARBY WAYNE**

R204250	2893299724 - 5481000	Galveston Co Elevation Projec - Contract Service	61,500 00
		Warrant Total:	**61,500.00**
		FUND 2893 TOTAL:	**61,500.00**

FUND: 2914 CDBG Housing Program

Warrant #: VW 00358667 **Payee Name: AMERICAN HOME BUILDERS INC.**

RL10784RET	2914000000 - 2070001	CDBG Housing Program - Contract Payable Retainage	13,659 09
		Warrant Total:	**13,659.09**

Warrant #: VW 00358729 **Payee Name: J.C. CANTERA HOMES INC**

FINAL 73112	2914000000 - 2070001	CDBG Housing Program - Contract Payable Retainage	-2,291 23
FINAL 73112	2914152511 - 5519010	Ownr-Occupied Rehab - Contractor - Construction	22,912 25
FINAL BELL	2914000000 - 2070001	CDBG Housing Program - Contract Payable Retainage	-4,611 49
FINAL BELL	2914152511 - 5519010	Ownr-Occupied Rehab - Contractor - Construction	46,114 86
		Warrant Total:	**62,124.39**

Warrant #: VW 00358730 **Payee Name: JAHN-GALVESTON INSURANCE AGENCY INC**

23472 073012	2914152512 - 5519020	Ownr-Occupied Reconstruction - Vendor - 1st Yr Ins Cst	1,025 00
23509 080612	2914152551 - 5519020	Rntr-Occupied Reconstruction - Vendor - 1st Yr Ins Cst	1,083 00
23550 072712	2914152551 - 5519020	Rntr-Occupied Reconstruction - Vendor - 1st Yr Ins Cst	146 30
23575 080312	2914152512 - 5519020	Ownr-Occupied Reconstruction - Vendor - 1st Yr Ins Cst	1,044 00
23626 072412A	2914152551 - 5519020	Rntr-Occupied Reconstruction - Vendor - 1st Yr Ins Cst	904 00
23672 080312	2914152551 - 5519020	Rntr-Occupied Reconstruction - Vendor - 1st Yr Ins Cst	1,083 00
23733 080612	2914152551 - 5519020	Rntr-Occupied Reconstruction - Vendor - 1st Yr Ins Cst	1,027 00
		Warrant Total:	**6,312.30**

Warrant #: VW 00358789 **Payee Name: SULLIVAN LAND SERVICES LTD**

2012735	2914000000 - 2070001	CDBG Housing Program - Contract Payable Retainage	9,836 13
2012739	2914000000 - 2070001	CDBG Housing Program - Contract Payable Retainage	-4,295 47
2012739	2914152551 - 5519010	Rntr-Occupied Reconstruction - Contractor - Construction	42,954 65
		Warrant Total:	**48,495.31**

Warrant #: VW 00358797 **Payee Name: TEGRITY HOMES LLC**

11234RET	2914000000 - 2070001	CDBG Housing Program - Contract Payable Retainage	10,252 46
		Warrant Total:	**10,252.46**

Warrant #: VW 00358820 **Payee Name: WORLEY CATASTOPHE RESPONSE LLC**

566	2914152500 - 5310001	Administration - Depart Supplies-Non Cap FFE	284 15
		Warrant Total:	**284.15**
		FUND 2914 TOTAL:	**141,127.70**

Galveston County, Texas

List of County Auditor's Approved Claims For Voucher Warrants Dated 08/14/2012

Invoice Number	Account Info		Amount
FUND: 2994 Disaster Recovery - Ike			
Warrant #: VW 00358810	**Payee Name: VALTIERRA ARCHITECTURE**		
120302	2994299521 - 5481000	Lewellyn Building - Contract Service	2,850 00
120303	2994299521 - 5481000	Lewellyn Building - Contract Service	1,800 00
		Warrant Total:	**4,650.00**
		FUND 2994 TOTAL:	**4,650.00**
FUND: 3100 County Capital Projects Fund			
Warrant #: VW 00358783	**Payee Name: SHI GOVT SOLUTIONS**		
GB0006070775	3100159126 - 5754105	IT Capital Projects - CJIS Network Updates	15,180 00
		Warrant Total:	**15,180.00**
Warrant #: VW 00358794	**Payee Name: SUNGARD PUBLIC SECTOR INC**		
53705	3100159126 - 5754100	IT Capital Projects - IFAS 7i Conversion	8,905 00
		Warrant Total:	**8,905.00**
Warrant #: VW 00358807	**Payee Name: TYLER TECHNOLOGIES - THE SOFTWARE**		
0202545	3100159126 - 5754103	IT Capital Projects - JLE Project	97,144 62
		Warrant Total:	**97,144.62**
		FUND 3100 TOTAL:	**121,229.62**
FUND: 3312 Unltd Tax Road Bonds Sr 2009			
Warrant #: VW 00358746	**Payee Name: MALECHE, VINCENT**		
PARCEL 129	3312000000 - 2295020	Unltd Tax Road Bonds Sr 2009 - ROW Acquisition for State	3,699 00
		Warrant Total:	**3,699.00**
Warrant #: VW 00358757	**Payee Name: MUNOZ, THOMAS A.**		
PARCEL 127	3312000000 - 2295020	Unltd Tax Road Bonds Sr 2009 - ROW Acquisition for State	999 00
		Warrant Total:	**999.00**
Warrant #: VW 00358761	**Payee Name: ORLANDO LOUIS & DORIS MAE BATTISTONI**		
PARCEL 122	3312000000 - 2295020	Unltd Tax Road Bonds Sr 2009 - ROW Acquisition for State	14,134 00
		Warrant Total:	**14,134.00**
Warrant #: VW 00358816	**Payee Name: WELLS FARGO HOME MORTGAGE**		
PARCEL 127 LIEN	3312000000 - 2295020	Unltd Tax Road Bonds Sr 2009 - ROW Acquisition for State	1,228 00
		Warrant Total:	**1,228.00**
		FUND 3312 TOTAL:	**20,060.00**
FUND: 6123 Group,Wrks'Comp,Unemplmnt Ins			
Warrant #: VW 00358727	**Payee Name: INTERFACE EAP INC**		
C027M712	6123155021 - 5491704	Group Insurance - Employee Assistance Program	3,552 40

Galveston County, Texas

List of County Auditor's Approved Claims For Voucher Warrants Dated 08/14/2012

Invoice Number	Account Info		Amount
		Warrant Total:	**3,552.40**
Warrant #: VW 00358728	**Payee Name: INTERFACE EAP INC**		
C027M812	6123155021 - 5491704	Group Insurance - Employee Assistance Program	3,526 20
		Warrant Total:	**3,526.20**
Warrant #: VW 00358788	**Payee Name: STEPHENS CONSULTING SERVICES LLC**		
COGAL001	6123155021 - 5417201	Group Insurance - Health Ins Administrative Fee	2,500 00
		Warrant Total:	**2,500.00**
		FUND 6123 TOTAL:	**9,578.60**

FUND: 6130 Self Insurance Reserve Fund

Warrant #: VW 00358673	**Payee Name: BELL, JANICE**		
CLAIM SETTLE 712	6130151431 - 5491731	General Self Insurance - Insurance Auto Liability	3,965 59
		Warrant Total:	**3,965.59**
Warrant #: VW 00358773	**Payee Name: RAILROAD COMMISSION OF TEXAS**		
DCKT 020342	6130151431 - 5491503	General Self Insurance - Claims Liability	50 00
		Warrant Total:	**50.00**
Warrant #: VW 00358801	**Payee Name: TEXAS LAWYERS INSURANCE EXCHANGE**		
9/08/12-9/08/13	6130151431 - 5491700	General Self Insurance - Insurance Public Officials	1,500 00
		Warrant Total:	**1,500.00**
		FUND 6130 TOTAL:	**5,515.59**

FUND: 7605 Escrow Fund

Warrant #: VW 00358674	**Payee Name: BETTISON DOYLE APFFEL & GUARINO PC**		
RSL 37 JUL 12	7605000000 - 2490726	Escrow Fund - Resale 10TX0535	111 32
		Warrant Total:	**111.32**
Warrant #: VW 00358675	**Payee Name: BETTISON DOYLE APFFEL & GUARINO PC**		
RSL 38 JUL 12	7605000000 - 2490728	Escrow Fund - Resale 09TX0074	500 00
		Warrant Total:	**500.00**
Warrant #: VW 00358682	**Payee Name: CACH LLC**		
CASE 912530	7605000000 - 2295016	Escrow Fund - Proceed Held for Owner	2,520 32
		Warrant Total:	**2,520.32**
Warrant #: VW 00358693	**Payee Name: CITY OF LEAGUE CITY**		
RSL 38 JUL 12	7605000000 - 2490728	Escrow Fund - Resale 09TX0074	3,326 08
		Warrant Total:	**3,326.08**
Warrant #: VW 00358696	**Payee Name: CLEAR CREEK INDEPENDENT SCHOOL**		
RSL 38 JUL 12	7605000000 - 2490728	Escrow Fund - Resale 09TX0074	1,256 20
		Warrant Total:	**1,256.20**

Galveston County, Texas

List of County Auditor's Approved Claims For Voucher Warrants Dated 08/14/2012

Invoice Number	Account Info		Amount
Warrant #: VW 00358703	**Payee Name: DUSHANE, BRENDA**		
RSL 37 JUL 12	7605000000 - 2490724	Escrow Fund - Resale 10TX0249	500 00
		Warrant Total:	**500.00**
Warrant #: VW 00358716	**Payee Name: GLENN, DORYN DANNER**		
RSL 36 JUN 12	7605000000 - 2490720	Escrow Fund - Resale 07TX0682	571 00
RSL 36 JUN 12	7605000000 - 2490721	Escrow Fund - Resale 08TX0523	635 00
RSL 36 JUN 12	7605000000 - 2490722	Escrow Fund - Resale 10TX0092	381 35
RSL 36 JUN 12	7605000000 - 2490723	Escrow Fund - Resale 10TX0247	429 00
RSL 37 JUL 12	7605000000 - 2490725	Escrow Fund - Resale 10TX0275	579.00
RSL 37 JUL 12	7605000000 - 2490726	Escrow Fund - Resale 10TX0535	112 65
RSL 37 JUL 12	7605000000 - 2490727	Escrow Fund - Resale 10TX1144	652 00
		Warrant Total:	**3,360.00**
Warrant #: VW 00358717	**Payee Name: GLENN, DORYN DANNER**		
RSL 37 JUL 12	7605000000 - 2490724	Escrow Fund - Resale 10TX0249	575.00
		Warrant Total:	**575.00**
Warrant #: VW 00358718	**Payee Name: GLENN, DORYN DANNER**		
RSL 38 JUL 12 CT	7605000000 - 2490728	Escrow Fund - Resale 09TX0074	1,215 00
RSL 38 JUL 12 CT	7605000000 - 2490729	Escrow Fund - Resale 11TX0186	547 00
		Warrant Total:	**1,762.00**
Warrant #: VW 00358732	**Payee Name: JOHNSON, CHERYL**		
RSL 38 JUL 12	7605000000 - 2490728	Escrow Fund - Resale 09TX0074	3,252 72
RSL 38 JUL 12	7605000000 - 2490729	Escrow Fund - Resale 11TX0186	2,568 00
		Warrant Total:	**5,820.72**
Warrant #: VW 00358733	**Payee Name: JOHNSON, CHERYL**		
RSL 36 JUN 12	7605000000 - 2490720	Escrow Fund - Resale 07TX0682	3,169 53
RSL 36 JUN 12	7605000000 - 2490721	Escrow Fund - Resale 08TX0523	15,915 32
RSL 36 JUN 12	7605000000 - 2490723	Escrow Fund - Resale 10TX0247	2,782 60
		Warrant Total:	**21,867.45**
Warrant #: VW 00358736	**Payee Name: KELLY, MARK**		
RSL 37 JUL 12	7605000000 - 2490727	Escrow Fund - Resale 10TX1144	500 00
		Warrant Total:	**500.00**
Warrant #: VW 00358739	**Payee Name: LAW OFFICE OF RAMZEY ZEIN-ELDIN**		
RSL 36 JUL 12	7605000000 - 2490720	Escrow Fund - Resale 07TX0682	500 00
		Warrant Total:	**500.00**
Warrant #: VW 00358744	**Payee Name: LYN WINGERT & ASSOCIATES**		
RSL 36 JUN 12	7605000000 - 2490720	Escrow Fund - Resale 07TX0682	250 00
RSL 36 JUN 12	7605000000 - 2490721	Escrow Fund - Resale 08TX0523	250 00
RSL 36 JUN 12	7605000000 - 2490722	Escrow Fund - Resale 10TX0092	189 92
RSL 36 JUN 12	7605000000 - 2490723	Escrow Fund - Resale 10TX0247	250 00
RSL 38 JUL 12	7605000000 - 2490728	Escrow Fund - Resale 09TX0074	500 00
RSL 38 JUL 12	7605000000 - 2490729	Escrow Fund - Resale 11TX0186	250 00
		Warrant Total:	**1,689.92**
Warrant #: VW 00358750	**Payee Name: MCCARNES, LOIS**		

Galveston County, Texas

List of County Auditor's Approved Claims For Voucher Warrants Dated 08/14/2012

Invoice Number	Account Info		Amount
RSL 36 JUL 12	7605000000 - 2490721	Escrow Fund - Resale 08TX0523	500 00
RSL 36 JUL 12	7605000000 - 2490722	Escrow Fund - Resale 10TX0092	379 84
		Warrant Total:	**879.84**
Warrant #: VW 00358767	**Payee Name: POOR, FREDDIE**		
RSL 36 JUN 12	7605000000 - 2490720	Escrow Fund - Resale 07TX0682	590 47
RSL 36 JUN 12	7605000000 - 2490721	Escrow Fund - Resale 08TX0523	780 68
RSL 36 JUN 12	7605000000 - 2490722	Escrow Fund - Resale 10TX0092	528 89
RSL 36 JUN 12	7605000000 - 2490723	Escrow Fund - Resale 10TX0247	619 40
		Warrant Total:	**2,519.44**
Warrant #: VW 00358768	**Payee Name: POOR, FREDDIE**		
RSL 38 JUL 12	7605000000 - 2490728	Escrow Fund - Resale 09TX0074	930 00
		Warrant Total:	**930.00**
Warrant #: VW 00358769	**Payee Name: POOR, FREDDIE**		
RSL 38 JUL 12	7605000000 - 2490729	Escrow Fund - Resale 11TX0186	675 00
		Warrant Total:	**675.00**
Warrant #: VW 00358777	**Payee Name: ROMERO LAW FIRM PC**		
RSL 38 JUL 12	7605000000 - 2490729	Escrow Fund - Resale 11TX0186	500 00
		Warrant Total:	**500.00**
Warrant #: VW 00358790	**Payee Name: SULLIVAN, DWIGHT D**		
RSL 36 JUN 12	7605000000 - 2490720	Escrow Fund - Resale 07TX0682	20 00
		Warrant Total:	**20.00**
Warrant #: VW 00358791	**Payee Name: SULLIVAN, DWIGHT D**		
RSL 36 JUN 12	7605000000 - 2490721	Escrow Fund - Resale 08TX0523	20 00
RSL38 JUL 12	7605000000 - 2490728	Escrow Fund - Resale 09TX0074	20.00
		Warrant Total:	**40.00**
Warrant #: VW 00358792	**Payee Name: SULLIVAN, DWIGHT D**		
RSL 36 JUN 12	7605000000 - 2490722	Escrow Fund - Resale 10TX0092	20 00
RSL38 JUL 12	7605000000 - 2490729	Escrow Fund - Resale 11TX0186	20 00
		Warrant Total:	**40.00**
Warrant #: VW 00358793	**Payee Name: SULLIVAN, DWIGHT D**		
RSL 36 JUN 12	7605000000 - 2490723	Escrow Fund - Resale 10TX0247	20 00
		Warrant Total:	**20.00**
Warrant #: VW 00358800	**Payee Name: TEXAS DEPARTMENT OF HEALTH**		
7/19/10-7/31/12	7605000000 - 2476036	Escrow Fund - Cntrl Adoption Reg FC 108 006	75 00
		Warrant Total:	**75.00**
		FUND 7605 TOTAL:	**49,988.29**

Galveston County, Texas

List of County Auditor's Approved Claims For Voucher Warrants Dated 08/14/2012

Summary of All Funds

Fund		Amount
1101	General Fund	259,274 22
2131	DA Seized Funds Afte Aft 10/89	3,333 14
2220	Adult Probation Fund	2,872.75
2230	Juvenile Justice Fund	164,458.58
2260	Emergency Management Fund	1,066 05
2301	Road & Bridge Fund	42,030 81
2370	Flood Control Fund	10,232 05
2410	Mosquito Control District Fund	12,595 54
2823	Criminal Justice Grant Fund	2,510 00
2824	Adult Probation Community	629 88
2825	Galv Cnty Adult Drug Court Pgm	57 72
2841	Juvenile Probation-State Aid	100,233 76
2848	Juv Jst Alt Education Program	100,778 70
2864	Auto Crimes Task Force Grant	381 22
2892	State Homeland Security Grant	8,710 50
2893	HMGP - IKE	61,500 00
2914	CDBG Housing Program	141,127 70
2994	Disaster Recovery - Ike	4,650 00
3100	County Capital Projects Fund	121,229 62
3312	Unltd Tax Road Bonds Sr 2009	20,060.00
6123	Group,Wrks'Comp,Unemplmnt Ins	9,578 60
6130	Self Insurance Reserve Fund	5,515 59
7605	Escrow Fund	49,988 29
	Grand Total:	**1,122,814.72**

Galveston County, Texas

List of County Auditor's Approved Claims For Voucher Warrants Dated 08/14/2012

Approved Order to pay by Commissioners Court this day August 21, 2012

Cliff Billingsley, County Auditor

Mark A. Henry, Galveston County Judge

Patrick Doyle, Galveston County Commissioner, Pct 1

Kevin D. O'Brien, Galveston County Commissioner, Pct 2

Stephen D. Holmes, Galveston County Commissioner, Pct 3

Kenneth Clark, Galveston County Commissioner, Pct 4

ATTEST:

Dwight D. Sullivan, County Clerk

By Brandy Chapman Deputy
Brandy Chapman

Check	Payee ID	Payee Name	Date	Check Amount	Type	Subs	Rel To	Note
A200358659	709754	4M YOUTH SERVICES INC	08/14/12	2,700 00	MW	OH		
A200358660	702471	ABL MANAGEMENT INC	08/14/12	39,490 57	MW	OH		
A200358661	700616	ACT PIPE AND SUPPLY INC	08/14/12	4,368 00	MW	OH		
A200358662	405005	ADAPCO INC	08/14/12	293 81	MW	OH		
A200358663	706649	ALERE TOXICOLOGY SERVICES INC	08/14/12	12 00	MW	OH		
A200358664	013524	ALERT ALARM BURG AND FIRE PRO	08/14/12	120 00	MW	OH		
A200358665	707451	ALWAYS SAFETY AND 1ST AID INC	08/14/12	566 45	MW	OH		
A200358666	714413	ALZAFARI, ERIC	08/14/12	111 00	MW	OH		
A200358667	711832	AMERICAN HOME BUILDERS INC	08/14/12	13,659 09	MW	OH		
A200358668	407257	ARNOLD SUPPLY INC	08/14/12	517 22	MW	OH		
A200358669	714630	ARTIS, FARRELL	08/14/12	3,368 00	MW	OH		
A200358670	710718	B L ALEXANDER ENTERPRISES IN	08/14/12	145 00	MW	OH		
A200358671	021030	BACLIFF BUILDERS SUPPLY INC	08/14/12	30 76	MW	OH		
A200358672	021360	BAY OIL CO CORP	08/14/12	20,300 28	MW	OH		
A200358673	714698	BELL, JANICE	08/14/12	3,965 59	MW	OH		
A200358674	704994	BETTISON DOYLE APFFEL & GUARI	08/14/12	111 32	MW	OH		
A200358675	704994	BETTISON DOYLE APFFEL & GUARI	08/14/12	500 00	MW	OH		
A200358676	700686	BFI WASTE SERVICES OF TEXAS L	08/14/12	1,914 77	MW	OH		
A200358677	700014	BLOW, ADRIENNE M	08/14/12	140 97	MW	OH		
A200358678	708995	BOLIVAR PENINSULA SPECIAL UTI	08/14/12	1,765 05	MW	OH		
A200358679	401759	BOSWORTH PAPERS INC	08/14/12	1,987 63	MW	OH		
A200358680	432192	BOZEMAN, KELLY	08/14/12	223 67	MW	OH		
A200358681	701322	C JOHNNY ON THE SPOT INC	08/14/12	2,990 10	MW	OH		
A200358682	714711	CACH LLC	08/14/12	2,520 32	MW	OH		
A200358683	711867	CAMERON, DONNA	08/14/12	578 45	MW	OH		
A200358684	701478	CDW GOVERNMENT INC	08/14/12	76 22	MW	OH		

Check	Payee ID	Payee Name	Date	Check Amount	Type	Subs	Rel To	Note
A200358685	407782	CENTERPOINT ENERGY	08/14/12	117 92	MW	OH		
A200358686	401934	CHCA MAINLAND LP	08/14/12	450 00	MW	OH		
A200358687	711045	CHEMAX CORPORATION	08/14/12	281 90	MW	OH		
A200358688	712596	CHERRY CRUSHED CONCRETE	08/14/12	27,539 97	MW	OH		
A200358689	032326	CHILDRENS CENTER INC, THE	08/14/12	14,220 00	MW	OH		
A200358690	033985	CITY OF GALVESTON	08/14/12	173 53	MW	OH		
A200358691	033209	CITY OF LA MARQUE	08/14/12	315 32	MW	OH		
A200358692	700433	CITY OF LAMARQUE	08/14/12	100 00	MW	OH		
A200358693	033241	CITY OF LEAGUE CITY	08/14/12	3,326 08	MW	OH		
A200358694	403085	CITY OF TEXAS CITY	08/14/12	596 70	MW	OH		
A200358695	714622	CLARK, GREGORY W	08/14/12	157 07	MW	OH		
A200358696	404101	CLEAR CREEK INDEPENDENT SCHOO	08/14/12	1,256 20	MW	OH		
A200358697	714315	COASTAL STRATEGIES GROUP	08/14/12	1,066 05	MW	OH		
A200358698	404940	COX, ELAINE	08/14/12	36 08	MW	OH		
A200358699	708051	D'AMBRA, LINDA	08/14/12	57 72	MW	OH		
A200358700	710008	DICKEY, ROCHELL	08/14/12	152 07	MW	OH		
A200358701	043216	DICKINSON IND SCHOOL DISTRICT	08/14/12	297,334 83	MW	OH		
A200358702	704331	DIRECT ENERGY LP	08/14/12	347 99	MW	OH		
A200358703	703381	DUSHANE, BRENDA	08/14/12	500 00	MW	OH		
A200358704	714536	ECO SEAL LLC	08/14/12	4,750 00	MW	OH		
A200358705	707318	EFFINGER, ERIKA	08/14/12	89 91	MW	OH		
A200358706	405028	ENTERGY	08/14/12	253 34	MW	OH		
A200358707	709548	EZELL, ROGER	08/14/12	51 97	MW	OH		
A200358708	708861	FIRETRON INC	08/14/12	555 00	MW	OH		
A200358709	710210	FLEETCOR TECHNOLOGIES DBA CHE	08/14/12	143 26	MW	OH		
A200358710	713156	FREEZE, JOHNNY J	08/14/12	68 00	MW	OH		

Check	Payee ID	Payee Name	Date	Check Amount	Type	Subs	Rel To	Note
A200358711	704625	G & K SERVICES	08/14/12	138 26	MW	OH		
A200358712	431945	GALVESTON COUNTY HEALTH DISTR	08/14/12	23 00	MW	OH		
A200358713	712050	GALVESTON COUNTY HISTORY INC	08/14/12	7,100 00	MW	OH		
A200358714	071407	GALVESTON COUNTY WCID #8	08/14/12	542 00	MW	OH		
A200358715	709796	GAVION, BRIAN	08/14/12	29 97	MW	OH		
A200358716	714494	GLENN, DORYN DANNER	08/14/12	3,360 00	MW	OH		
A200358717	714494	GLENN, DORYN DANNER	08/14/12	575 00	MW	OH		
A200358718	714494	GLENN, DORYN DANNER	08/14/12	1,762 00	MW	OH		
A200358719	704961	GRANGER, ROSSLYN N	08/14/12	510 00	MW	OH		
A200358720	400782	GULF COAST CENTER	08/14/12	11,696 33	MW	OH		
A200358721	704506	GULF COAST COMPLETE MARINE SE	08/14/12	2,034 29	MW	OH		
A200358722	075101	GULF COAST TRADES CENTER	08/14/12	17,192 10	MW	OH		
A200358723	431294	HENDERSON, ANTHONY	08/14/12	116 55	MW	OH		
A200358724	710193	HI-WAY EQUIPMENT COMPANY LLC	08/14/12	1,798 96	MW	OH		
A200358725	409105	HOME DEPOT	08/14/12	29 97	MW	OH		
A200358726	708290	INSIGHT PUBLIC SECTOR INC	08/14/12	2,756 67	MW	OH		
A200358727	400917	INTERFACE EAP INC	08/14/12	3,552 40	MW	OH		
A200358728	400917	INTERFACE EAP INC	08/14/12	3,526 20	MW	OH		
A200358729	711917	J C CANTERA HOMES INC	08/14/12	62,124 39	MW	OH		
A200358730	409049	JAHN-GALVESTON INSURANCE AGEN	08/14/12	6,312 30	MW	OH		
A200358731	712632	JAMES, RODERICK	08/14/12	294 30	MW	OH		
A200358732	707570	JOHNSON, CHERYL	08/14/12	5,820 72	MW	OH		
A200358733	707570	JOHNSON, CHERYL	08/14/12	21,867 45	MW	OH		
A200358734	705849	JONES, CHARLOTTE	08/14/12	122 66	MW	OH		
A200358735	714623	JUAREZ, JENNIFER	08/14/12	173 16	MW	OH		
A200358736	112110	KELLY, MARK	08/14/12	500 00	MW	OH	B7	

Check	Payee ID	Payee Name	Date	Check Amount	Type	Subs	Rel To	Note
A200358737	402386	KLEEN JANITORIAL SUPPLY COMPA	08/14/12	2,334 14	MW	OH		
A200358738	701428	KLYNG, KERRY	08/14/12	119 88	MW	OH		
A200358739	707808	LAW OFFICE OF RAMZEY ZEIN-ELD	08/14/12	500 00	MW	OH		
A200358740	401839	LEAL, RACHEL	08/14/12	32 33	MW	OH		
A200358741	123026	LIGGIOS TIRE AND SERVICE CENT	08/14/12	2,218 06	MW	OH		
A200358742	707090	LINEBARGER GOGGAN BLAIR & SAM	08/14/12	2,788 66	MW	OH		
A200358743	702994	LISTER PLUMBING	08/14/12	545 00	MW	OH		
A200358744	709842	LYN WINGERT & ASSOCIATES	08/14/12	1,689 92	MW	OH		
A200358745	136192	MAINLAND TOOL AND SUPPLY INC	08/14/12	95 98	MW	OH		
A200358746	714729	MALECHE, VINCENT	08/14/12	3,699 00	MW	OH		
A200358747	712820	MALELO AND COMPANY OHIO	08/14/12	89 50	MW	OH		
A200358748	705312	MARTY'S CITY AUTO INC	08/14/12	45 00	MW	OH		
A200358749	705424	MASTER WORD SERVICE INC	08/14/12	420 04	MW	OH		
A200358750	404930	MCCARNES, LOIS	08/14/12	879 84	MW	OH		
A200358751	708527	MCNAIR, COREY	08/14/12	98 79	MW	OH		
A200358752	705354	MILLER, JARVIS	08/14/12	248 59	MW	OH		
A200358753	401421	MOODY NATIONAL BANK	08/14/12	5,747 73	MW	OH		
A200358754	401421	MOODY NATIONAL BANK	08/14/12	4,034 58	MW	OH		
A200358755	134056	MOTOROLA SOLUTIONS INC	08/14/12	8,710 50	MW	OH		
A200358756	714649	MOUTON, DARBY WAYNE	08/14/12	61,500 00	MW	OH		
A200358757	714724	MUNOZ, THOMAS A	08/14/12	999 00	MW	OH		
A200358758	144261	NORRIS, BRENT T	08/14/12	66 05	MW	OH		
A200358759	713699	OLALEKAN, JAMES	08/14/12	211 46	MW	OH		
A200358760	705252	ONEOK INC	08/14/12	3,230 93	MW	OH		
A200358761	714718	ORLANDO LOUIS & DORIS MAE BAT	08/14/12	14,134 00	MW	OH		
A200358762	409712	PARISH, ERVIN R	08/14/12	132 65	MW	OH		

Check	Payee ID	Payee Name	Date	Check Amount	Type	Subs	Rel To	Note
A200358763	711436	PEGASUS SCHOOLS INC	08/14/12	7,742 00	MW	OH		
A200358764	712853	PEREZ, OLDA	08/14/12	40 15	MW	OH		
A200358765	709307	PINNACLE MEDICAL MANAGEMENT C	08/14/12	1,426 50	MW	OH		
A200358766	709307	PINNACLE MEDICAL MANAGEMENT C	08/14/12	679 50	MW	OH		
A200358767	714516	POOR, FREDDIE	08/14/12	2,519 44	MW	OH		
A200358768	714516	POOR, FREDDIE	08/14/12	930 00	MW	OH		
A200358769	714516	POOR, FREDDIE	08/14/12	675 00	MW	OH		
A200358770	164392	PRECISION DYNAMICS CORP	08/14/12	380 00	MW	OH		
A200358771	703165	PRODUCTIVITY CENTER INC	08/14/12	295 00	MW	OH		
A200358772	055012	R B EVERETT & CO	08/14/12	226 25	MW	OH		
A200358773	714705	RAILROAD COMMISSION OF TEXAS	08/14/12	50 00	MW	OH		
A200358774	712364	RAMIREZ, VICTORIA	08/14/12	185 93	MW	OH		
A200358775	714650	ROBINSON III, VIRGIL SMITH	08/14/12	30 00	MW	OH		
A200358776	713716	RODRIGUEZ, VANESSA	08/14/12	72 71	MW	OH		
A200358777	712827	ROMERO LAW FIRM PC	08/14/12	500 00	MW	OH		
A200358778	706328	ROSEMON, VANESSA R	08/14/12	385 11	MW	OH		
A200358779	191023	SANTA FE AUTO PARTS INC	08/14/12	2,474 93	MW	OH		
A200358780	192146	SEASIDE ENTERPRISES INC	08/14/12	108 90	MW	OH		
A200358781	405858	SHELTERING HARBOUR	08/14/12	8,018 50	MW	OH		
A200358782	400542	SHERWIN WILLIAMS PAINT CORP	08/14/12	159 10	MW	OH		
A200358783	703308	SHI GOVT SOLUTIONS	08/14/12	47,038 18	MW	OH		
A200358784	700250	SIEMENS BUILDING TECHNOLOGIES	08/14/12	14,956 00	MW	OH		
A200358785	706313	SKUFCA, RICHARD	08/14/12	24 42	MW	OH		
A200358786	704289	SOLUTIONS4SURE COM INC	08/14/12	803 38	MW	OH		
A200358787	713129	SOUTHWEST T & I INC	08/14/12	649 60	MW	OH		
A200358788	714541	STEPHENS CONSULTING SERVICES	08/14/12	2,500 00	MW	OH		

Check	Payee ID	Payee Name	Date	Check Amount	Type	Subs	Rel To	Note
A200358789	711234	SULLIVAN LAND SERVICES LTD	08/14/12	48,495 31	MW	OH		
A200358790	713192	SULLIVAN, DWIGHT D	08/14/12	20 00	MW	OH		
A200358791	713192	SULLIVAN, DWIGHT D	08/14/12	40 00	MW	OH		
A200358792	713192	SULLIVAN, DWIGHT D	08/14/12	40 00	MW	OH		
A200358793	713192	SULLIVAN, DWIGHT D	08/14/12	20 00	MW	OH		
A200358794	707408	SUNGARD PUBLIC SECTOR INC	08/14/12	8,905 00	MW	OH		
A200358795	410676	SUPERCIRCUITS INC	08/14/12	381 22	MW	OH		
A200358796	710840	TECHNIQUE DATA SYSTEMS	08/14/12	2,375 00	MW	OH		
A200358797	711926	TEGRITY HOMES LLC	08/14/12	10,252 46	MW	OH		
A200358798	405881	TEXAS AGRILIFE EXTENSION	08/14/12	310 00	MW	OH		
A200358799	708657	TEXAS COMMISSION ON LAW ENFOR	08/14/12	35 00	MW	OH		
A200358800	404312	TEXAS DEPARTMENT OF HEALTH	08/14/12	75 00	MW	OH		
A200358801	405297	TEXAS LAWYERS INSURANCE EXCHA	08/14/12	1,500 00	MW	OH		
A200358802	708759	TEXAS WORKFORCE COMMISSION	08/14/12	1,500 00	MW	OH		
A200358803	710228	THOMPSON, SHELLY	08/14/12	94 90	MW	OH		
A200358804	713072	TIBALDOS FEED AND SUPPLY	08/14/12	91 90	MW	OH		
A200358805	712290	TREE-MENDUS	08/14/12	1,250 00	MW	OH		
A200358806	714629	TRIALFUSION LLC	08/14/12	3,000 00	MW	OH		
A200358807	710045	TYLER TECHNOLOGIES - THE SOFT	08/14/12	181,834 62	MW	OH		
A200358808	701538	UNITED PARCEL SERVICE	08/14/12	27 84	MW	OH		
A200358809	404588	UNIVAR USA	08/14/12	6,788 00	MW	OH		
A200358810	714356	VALTIERRA ARCHITECTURE	08/14/12	4,650 00	MW	OH		
A200358811	432061	VILLARREAL, NORMA	08/14/12	74 37	MW	OH		
A200358812	708752	VOICE4NET COM	08/14/12	50 00	MW	OH		
A200358813	231209	WALMART	08/14/12	61 55	MW	OH		
A200358814	402963	WASTE MANAGEMENT INC	08/14/12	4,703 13	MW	OH		

Check	Payee ID	Payee Name	Date	Check Amount	Type	Subs	Rel To	Note
A200358815	713777	WATERWALL, CHASE	08/14/12	167 06	MW	OH		
A200358816	713044	WELLS FARGO HOME MORTGAGE	08/14/12	1,228 00	MW	OH		
A200358817	714730	WILLIAMS, NICKISHA	08/14/12	144 86	MW	OH		
A200358818	713427	WILLINGHAM, GARY	08/14/12	288 00	MW	OH		
A200358819	406641	WINDSHIELD DOCTOR	08/14/12	260 00	MW	OH		
A200358820	714640	WORLEY CATASTOPHE RESPONSE LL	08/14/12	284 15	MW	OH		

S U B T O T A L S

Total Void Machine Written	0 00	Number of Checks Processed	0
Total Void Hand Written	0 00	Number of Checks Processed	0
Total Machine Written	1096,745 46	Number of Checks Processed	162
Total Hand Written	0 00	Number of Checks Processed	0
Total Reversals	0 00	Number of Checks Processed	0
Total Cancelled	0 00	Number of Checks Processed	0
S U B T O T A L	1096,745 46		

Check	Payee ID	Payee Name	Date	Check Amount	Type	Subs	Rel To	Note
F600000459	714252	CLASSIC AUTOPLEX GALVESTON	08/14/12	763 86	CX	OH		
F600000460	071118	GALVESTON NEWSPAPERS INC	08/14/12	25,305 40	CX	OH		

S U B T O T A L S

Total Void Machine Written	0 00	Number of Checks Processed	0
Total Void Hand Written	0 00	Number of Checks Processed	0
Total Machine Written	0 00	Number of Checks Processed	0
Total Hand Written	0 00	Number of Checks Processed	0
Total Reversals	0 00	Number of Checks Processed	0
Total Cancelled	26,069 26	Number of Checks Processed	2
S U B T O T A L	26,069 26		

Check	Payee ID	Payee Name	Date	Check Amount	Type	Subs	Rel To	Note

G R A N D T O T A L S

Total Void Machine Written	0 00	Number of Checks Processed	0
Total Void Hand Written	0 00	Number of Checks Processed	0
Total Machine Written	1096,745 46	Number of Checks Processed	162
Total Hand Written	0 00	Number of Checks Processed	0
Total Reversals	0 00	Number of Checks Processed	0
Total Cancelled	26,069 26	Number of Checks Processed	2
G R A N D T O T A L	1122,814 72		

Galveston County, Texas

List of County Auditor's Approved Claims For Voucher Warrants Dated 08/21/2012

Invoice Number	Account Info		Amoun
FUND: 1101 General Fund			
Warrant #: VW 00000461	**Payee Name: BAKER, STEPHEN W**		
8/5-8/12	1101121000 - 5495100	Justice Administration - Education	160 53
		Warrant Total:	**160.53**
Warrant #: VW 00000462	**Payee Name: CLASSIC AUTOPLEX GALVESTON**		
73140	1101211101 - 5423110	Administration Sheriff Dept - Auto Maintenance	1,233 74
73155	1101211101 - 5423110	Administration Sheriff Dept - Auto Maintenance	43 49
73158	1101211101 - 5423110	Administration Sheriff Dept - Auto Maintenance	55.08
73173	1101211101 - 5423110	Administration Sheriff Dept - Auto Maintenance	43.49
73176	1101211101 - 5423110	Administration Sheriff Dept - Auto Maintenance	48 67
73184	1101211101 - 5423110	Administration Sheriff Dept - Auto Maintenance	255 03
73654	1101211101 - 5423110	Administration Sheriff Dept - Auto Maintenance	303 67
73785	1101211101 - 5423110	Administration Sheriff Dept - Auto Maintenance	132 50
73786	1101211101 - 5423110	Administration Sheriff Dept - Auto Maintenance	864 20
73806	1101211101 - 5423110	Administration Sheriff Dept - Auto Maintenance	369 42
73813	1101211101 - 5423110	Administration Sheriff Dept - Auto Maintenance	177 08
73822	1101211101 - 5423110	Administration Sheriff Dept - Auto Maintenance	245 89
73842	1101211101 - 5423110	Administration Sheriff Dept - Auto Maintenance	13 52
73854	1101211101 - 5423110	Administration Sheriff Dept - Auto Maintenance	1,145 64
73858	1101211101 - 5423110	Administration Sheriff Dept - Auto Maintenance	55 08
73894	1101211101 - 5423110	Administration Sheriff Dept - Auto Maintenance	363 44
73895	1101211101 - 5423110	Administration Sheriff Dept - Auto Maintenance	992 18
73911	1101211101 - 5423110	Administration Sheriff Dept - Auto Maintenance	596 21
73991	1101211101 - 5423110	Administration Sheriff Dept - Auto Maintenance	46 08
		Warrant Total:	**6,984.41**
Warrant #: VW 00358822	**Payee Name: AARON AND QUIRK LLP**		
20123833CC	1101000010 - 4414012	General Government - County Clerk Refund of Fees	10 00
		Warrant Total:	**10.00**
Warrant #: VW 00358823	**Payee Name: ABC STEEL PRODUCTS CO INC**		
357984	1101170100 - 5424000	Facilities Srvs & Maintenance - Maint & Repairs Buildings	535 50
		Warrant Total:	**535.50**
Warrant #: VW 00358824	**Payee Name: ABL MANAGEMENT INC**		
191618	1101211133 - 5481200	Sheriff-Corrections - Jail Food Service Contract	17,867 73
		Warrant Total:	**17,867.73**
Warrant #: VW 00358825	**Payee Name: ABM JANITORIAL SERVICES - SOUTH CENTRAL**		
4190574	1101170100 - 5412094	Facilities Srvs & Maintenance - CareHere Clinic Expenditu	350 00
4190575	1101170100 - 5481000	Facilities Srvs & Maintenance - Contract Service	54,939.76
4190577	1101170100 - 5412094	Facilities Srvs & Maintenance - CareHere Clinic Expenditu	1,120.67
		Warrant Total:	**56,410.43**
Warrant #: VW 00358827	**Payee Name: ACTION PERSONNEL INC**		
100906	1101522020 - 5481000	Parks Department - Contract Service	570 00
		Warrant Total:	**570.00**
Warrant #: VW 00358828	**Payee Name: AIRGAS - SOUTHWEST INC.**		
9903705924	1101522020 - 5310000	Parks Department - Supplies and Materials	51.00

Galveston County, Texas

List of County Auditor's Approved Claims For Voucher Warrants Dated 08/21/2012

Invoice Number	Account Info		Amoun
		Warrant Total:	**51.0**
Warrant #: VW 00358829	**Payee Name: ALAMO TITLE COMPANY**		
862535	1101000010 - 4414012	General Government - County Clerk Refund of Fees	28 00
		Warrant Total:	**28.00**
Warrant #: VW 00358831	**Payee Name: ALEX AIR CONDITIONING INC**		
156875	1101170100 - 5424000	Facilities Srvs & Maintenance - Maint & Repairs Buildings	3,789 69
		Warrant Total:	**3,789.69**
Warrant #: VW 00358832	**Payee Name: ALFAX FURNITURE**		
VG686838MID	1101522020 - 5310001	Parks Department - Depart Supplies-Non Cap FFE	1,014 00
		Warrant Total:	**1,014.00**
Warrant #: VW 00358837	**Payee Name: AT&T MOBILITY**		
2872348763060812	1101211121 - 5310001	Sheriff-Criminal Investigation - Depart Supplies-Non Cap	177 60
		Warrant Total:	**177.60**
Warrant #: VW 00358839	**Payee Name: BARNETT, STEPHANIE B**		
12JV0171 080912	1101121000 - 5431230	Justice Administration - Court Apptd Atty Dist Courts	130.00
12JV0214 080112	1101121000 - 5431230	Justice Administration - Court Apptd Atty Dist Courts	195 00
318185 081012	1101122200 - 5431222	County Court #2 - Roberts - Defense Atty Co Ct #2	201 50
320881 071912	1101122100 - 5431221	County Court #1 - Grady - Defense Atty Co Ct	97 50
		Warrant Total:	**624.00**
Warrant #: VW 00358844	**Payee Name: BAY OIL CO CORP**		
20144401	1101172111 - 5322010	Fleet Mgmt-Galveston - Auto Fuel Expense	2,901 48
205819	1101172111 - 5322010	Fleet Mgmt-Galveston - Auto Fuel Expense	4,908 13
		Warrant Total:	**7,809.61**
Warrant #: VW 00358846	**Payee Name: BENNETT, JAMES M**		
11CR3618 080912	1101121000 - 5431230	Justice Administration - Court Apptd Atty Dist Courts	1,365 00
12JV0089 080312	1101122200 - 5431222	County Court #2 - Roberts - Defense Atty Co Ct #2	390 00
320615 081012	1101122200 - 5431222	County Court #2 - Roberts - Defense Atty Co Ct #2	260 00
323288 081012	1101122200 - 5431222	County Court #2 - Roberts - Defense Atty Co Ct #2	195 00
		Warrant Total:	**2,210.00**
Warrant #: VW 00358847	**Payee Name: BERARDINELLI CORREIA, SHAUNA L**		
12CP0045 080112	1101121000 - 5431230	Justice Administration - Court Apptd Atty Dist Courts	260 00
12JV0020	1101121000 - 5431230	Justice Administration - Court Apptd Atty Dist Courts	390.00
		Warrant Total:	**650.00**
Warrant #: VW 00358848	**Payee Name: BETA TECHNOLOGY INC**		
572897	1101170100 - 5424000	Facilities Srvs & Maintenance - Maint & Repairs Buildings	644 40
		Warrant Total:	**644.40**
Warrant #: VW 00358849	**Payee Name: BFI WASTE SERVICES OF TEXAS LP**		
0855000540033	1101170100 - 5481000	Facilities Srvs & Maintenance - Contract Service	738 97
0856000540510	1101170100 - 5481000	Facilities Srvs & Maintenance - Contract Service	455 58
		Warrant Total:	**1,194.55**
Warrant #: VW 00358852	**Payee Name: BOB J JOHNSON & ASSOCIATES**		

Galveston County, Texas

List of County Auditor's Approved Claims For Voucher Warrants Dated 08/21/2012

Invoice Number	Account Info		Amount
267566	1101170100 - 5424000	Facilities Srvs & Maintenance - Maint & Repairs Buildings	183 60
		Warrant Total:	**183.60**
Warrant #: VW 00358853	**Payee Name: BONO, JONI**		
080212 CRT RPTR	1101121000 - 5411102	Justice Administration - Prof Serv Transcripts	1,677 00
		Warrant Total:	**1,677.00**
Warrant #: VW 00358855	**Payee Name: BRIGGS, LYNETTE**		
11CR2411 080412	1101121000 - 5431230	Justice Administration - Court Apptd Atty Dist Courts	195 00
12CR0399 051512	1101121000 - 5431230	Justice Administration - Court Apptd Atty Dist Courts	221 00
		Warrant Total:	**416.00**
Warrant #: VW 00358857	**Payee Name: BUCSANYI FAMILY MANAGEMENT CORP**		
537178	1101522020 - 5423000	Parks Department - Maint/Repairs Equipment	538.65
		Warrant Total:	**538.65**
Warrant #: VW 00358858	**Payee Name: BURKE AUSTIN MOORE**		
323110 080812	1101122100 - 5431221	County Court #1 - Grady - Defense Atty Co Ct	97 50
		Warrant Total:	**97.50**
Warrant #: VW 00358859	**Payee Name: BUZBEE PROPERTIES INC**		
ARI1200063	1101123800 - 5426250	Justice Court Pct #8-2 - Rental Office Space	2,770 36
		Warrant Total:	**2,770.36**
Warrant #: VW 00358861	**Payee Name: CAPITAL GRAPHICS INC**		
110609	1101114030 - 5499201	Election Expense - Election Expense	973 25
		Warrant Total:	**973.25**
Warrant #: VW 00358864	**Payee Name: CEASER, KENDRIC**		
11CR3259 072012	1101121000 - 5431230	Justice Administration - Court Apptd Atty Dist Courts	4,452.50
		Warrant Total:	**4,452.50**
Warrant #: VW 00358865	**Payee Name: CENTERPOINT ENERGY**		
447227 080612	1101170100 - 5421300	Facilities Srvs & Maintenance - Gas	16 04
47504113 081712	1101170100 - 5421300	Facilities Srvs & Maintenance - Gas	256 63
47543723 080312	1101170100 - 5421300	Facilities Srvs & Maintenance - Gas	90 83
47972211 081312	1101170100 - 5421300	Facilities Srvs & Maintenance - Gas	14 66
48318612 081412	1101170100 - 5421300	Facilities Srvs & Maintenance - Gas	15 41
92071141 081412	1101170100 - 5421300	Facilities Srvs & Maintenance - Gas	17 36
		Warrant Total:	**410.93**
Warrant #: VW 00358866	**Payee Name: CENTURY OAKS TITLE LLC**		
867423	1101000010 - 4414012	General Government - County Clerk Refund of Fees	16 00
		Warrant Total:	**16.00**
Warrant #: VW 00358867	**Payee Name: CHERNOSKY,SMITH,RESSLING & SMITH PLLC**		
866660	1101000010 - 4414012	General Government - County Clerk Refund of Fees	20 00
		Warrant Total:	**20.00**
Warrant #: VW 00358869	**Payee Name: CITI BANK USA N A**		
757674	1101172111 - 5322010	Fleet Mgmt-Galveston - Auto Fuel Expense	62 58
988154	1101172111 - 5322010	Fleet Mgmt-Galveston - Auto Fuel Expense	68 84

Galveston County, Texas

List of County Auditor's Approved Claims For Voucher Warrants Dated 08/21/2012

Invoice Number	Account Info		Amount
		Warrant Total:	**131.42**
Warrant #: VW 00358878	**Payee Name: COLTZER, ROBERT G**		
12CR1533 070912	1101121000 - 5431230	Justice Administration - Court Apptd Atty Dist Courts	165.75
12CR1533 080912	1101121000 - 5431230	Justice Administration - Court Apptd Atty Dist Courts	165 75
		Warrant Total:	**331.50**
Warrant #: VW 00358879	**Payee Name: COMMONWEALTH TITLE OF HOUSTON**		
864777	1101000010 - 4414012	General Government - County Clerk Refund of Fees	24 00
		Warrant Total:	**24.00**
Warrant #: VW 00358881	**Payee Name: COOK, DAVID**		
12CR0640 080912	1101121000 - 5431000	Justice Administration - Trial Expense	14 50
12CR0640 080912	1101121000 - 5431230	Justice Administration - Court Apptd Atty Dist Courts	578 50
		Warrant Total:	**593.00**
Warrant #: VW 00358884	**Payee Name: DAHLENBURG, MICHAEL L**		
12CP0051 072312	1101121000 - 5431230	Justice Administration - Court Apptd Atty Dist Courts	162 50
		Warrant Total:	**162.50**
Warrant #: VW 00358885	**Payee Name: DANESI'S OUTDOOR SERVICES**		
64	1101544042 - 5481000	Beach Maintenance-Rd & Bridge - Contract Service	1,134 00
65	1101544042 - 5481000	Beach Maintenance-Rd & Bridge - Contract Service	1,134 00
66	1101544042 - 5481000	Beach Maintenance-Rd & Bridge - Contract Service	1,134 00
67	1101544042 - 5481000	Beach Maintenance-Rd & Bridge - Contract Service	1,134 00
68	1101544042 - 5481000	Beach Maintenance-Rd & Bridge - Contract Service	1,134 00
69	1101544042 - 5481000	Beach Maintenance-Rd & Bridge - Contract Service	1,134 00
70	1101544042 - 5481000	Beach Maintenance-Rd & Bridge - Contract Service	1,134 00
71	1101544042 - 5481000	Beach Maintenance-Rd & Bridge - Contract Service	1,134 00
72	1101544042 - 5481000	Beach Maintenance-Rd & Bridge - Contract Service	1,134 00
		Warrant Total:	**10,206.00**
Warrant #: VW 00358886	**Payee Name: DIAZ, DEBBIE**		
JUL 2012 MLG	1101122300 - 5496301	Probate Court - Sullivan - Auto Mileage	126.54
		Warrant Total:	**126.54**
Warrant #: VW 00358887	**Payee Name: DIAZ, MARK A**		
12CR0101 081512	1101121000 - 5431230	Justice Administration - Court Apptd Atty Dist Courts	520 00
322564 080712	1101122100 - 5431221	County Court #1 - Grady - Defense Atty Co Ct	195 00
		Warrant Total:	**715.00**
Warrant #: VW 00358888	**Payee Name: DICKEY, TAMYRA**		
JUL 2012 MLG	1101443100 - 5496301	Indigent Care & Medication - Auto Mileage	80 48
		Warrant Total:	**80.48**
Warrant #: VW 00358889	**Payee Name: DLH GEOSURV LLC**		
867926	1101000010 - 4414012	General Government - County Clerk Refund of Fees	8 00
		Warrant Total:	**8.00**
Warrant #: VW 00358890	**Payee Name: DOPICO, MARY**		
120710031C	1101121000 - 5431101	Justice Administration - Professional Srv Interpreter	607 50
		Warrant Total:	**607.50**

Galveston County, Texas

List of County Auditor's Approved Claims For Voucher Warrants Dated 08/21/2012

Invoice Number	Account Info		Amour
Warrant #: VW 00358891	**Payee Name: DRAGONY, RACHEL ANN**		
08CR1688 080512	1101121000 - 5431230	Justice Administration - Court Apptd Atty Dist Courts	1,007 5(
11CR2339 033012	1101121000 - 5431230	Justice Administration - Court Apptd Atty Dist Courts	780 0(
		Warrant Total:	**1,787.5(**
Warrant #: VW 00358892	**Payee Name: DUCOTE, JAMES**		
94FD2223 073012	1101121000 - 5431230	Justice Administration - Court Apptd Atty Dist Courts	810 55
		Warrant Total:	**810.55**
Warrant #: VW 00358893	**Payee Name: DUCOTE, JEREMY B**		
12CR1522 080912	1101121000 - 5431230	Justice Administration - Court Apptd Atty Dist Courts	325 00
		Warrant Total:	**325.00**
Warrant #: VW 00358894	**Payee Name: DULIN, MARGARET C.**		
864240	1101000010 - 4414012	General Government - County Clerk Refund of Fees	7 00
		Warrant Total:	**7.00**
Warrant #: VW 00358896	**Payee Name: DUNTEN LAW FIRM**		
20124249CC	1101000010 - 4414012	General Government - County Clerk Refund of Fees	32 00
		Warrant Total:	**32.00**
Warrant #: VW 00358897	**Payee Name: EDDY, CYNTHIA**		
JUN-AUG 2012 MLG	1101114030 - 5496301	Election Expense - Auto Mileage	66 99
		Warrant Total:	**66.99**
Warrant #: VW 00358899	**Payee Name: ELLIS, SABRINA E.**		
08/09-17/12	1101121000 - 5415215	Justice Administration - Contract Srv-Senate Bill 7	700.00
		Warrant Total:	**700.00**
Warrant #: VW 00358900	**Payee Name: EMILY A FISHER PLLC**		
320511 080812	1101122400 - 5310000	County Court #3 - Dupuy - Supplies and Materials	2 00
320511 080812	1101122400 - 5431221	County Court #3 - Dupuy - Defense Atty Co Ct	390 00
		Warrant Total:	**392.00**
Warrant #: VW 00358901	**Payee Name: EMILY A FISHER PLLC**		
317200 080312	1101122100 - 5431221	County Court #1 - Grady - Defense Atty Co Ct	929 92
		Warrant Total:	**929.92**
Warrant #: VW 00358902	**Payee Name: ERSKINE, LYNNETTE D**		
JUN 22 2012 MLG	1101127100 - 5481000	District Attorney - Contract Service	51 20
		Warrant Total:	**51.20**
Warrant #: VW 00358903	**Payee Name: ESQUIRE DEPOSITION SOLUTIONS LLC**		
EQ391668	1101153020 - 5431000	Trial Expense - Trial Expense	874 68
		Warrant Total:	**874.68**
Warrant #: VW 00358905	**Payee Name: FANNING AND FANNING PLLC**		
318193 081012	1101122100 - 5431221	County Court #1 - Grady - Defense Atty Co Ct	487 50
322487 080312	1101122200 - 5431222	County Court #2 - Roberts - Defense Atty Co Ct #2	162 50
325467 081012	1101122400 - 5431221	County Court #3 - Dupuy - Defense Atty Co Ct	260 00
326014 080212	1101122200 - 5431222	County Court #2 - Roberts - Defense Atty Co Ct #2	325 00

Galveston County, Texas

List of County Auditor's Approved Claims For Voucher Warrants Dated 08/21/2012

Invoice Number	Account Info		Amoun
		Warrant Total:	**1,235.0(**
Warrant #: VW 00358906	**Payee Name: FAUS, SALVADOR**		
11CR3517 080612	1101121000 - 5431230	Justice Administration - Court Apptd Atty Dist Courts	568 75
11FD1419 080612	1101121000 - 5431230	Justice Administration - Court Apptd Atty Dist Courts	75 80
		Warrant Total:	**644.55**
Warrant #: VW 00358907	**Payee Name: FINEGAN, SAMUEL K**		
11CR2226 081512	1101121000 - 5431230	Justice Administration - Court Apptd Atty Dist Courts	845.00
320810 081012	1101122200 - 5431222	County Court #2 - Roberts - Defense Atty Co Ct #2	390 00
		Warrant Total:	**1,235.00**
Warrant #: VW 00358908	**Payee Name: FIRST CHOICE POWER**		
655002003178250	1101443100 - 5447200	Indigent Care & Medication - Emergency Assistance	109 33
		Warrant Total:	**109.33**
Warrant #: VW 00358909	**Payee Name: FISHER, DENA LAURA**		
08CR1242 081512	1101121000 - 5431230	Justice Administration - Court Apptd Atty Dist Courts	1,007.50
12CR0240 080712	1101121000 - 5431230	Justice Administration - Court Apptd Atty Dist Courts	552 50
12CR1497 081512	1101121000 - 5431230	Justice Administration - Court Apptd Atty Dist Courts	260 00
		Warrant Total:	**1,820.00**
Warrant #: VW 00358910	**Payee Name: FLEMING LAW FIRM**		
10CR1231 081012	1101121000 - 5431230	Justice Administration - Court Apptd Atty Dist Courts	260 00
11CR1014 121211	1101122200 - 5431222	County Court #2 - Roberts - Defense Atty Co Ct #2	227 50
12CR8300 080312	1101121000 - 5431230	Justice Administration - Court Apptd Atty Dist Courts	260 00
310166 081412	1101122200 - 5431222	County Court #2 - Roberts - Defense Atty Co Ct #2	357 50
320665 062812	1101122100 - 5431221	County Court #1 - Grady - Defense Atty Co Ct	195.00
		Warrant Total:	**1,300.00**
Warrant #: VW 00358911	**Payee Name: FOWLER, JANA K**		
080212 CRT RPTR	1101121000 - 5431121	Justice Administration - Court Reporter Expense	253 28
		Warrant Total:	**253.28**
Warrant #: VW 00358912	**Payee Name: FRYE STEIDLEY OAKS AND BENAVIDEZ PLLC**		
356430 081412	1101122100 - 5431221	County Court #1 - Grady - Defense Atty Co Ct	227 50
JL DCKT 08/6-10	1101122400 - 5431221	County Court #3 - Dupuy - Defense Atty Co Ct	950 00
		Warrant Total:	**1,177.50**
Warrant #: VW 00358913	**Payee Name: FULK, GEORGE BYRON**		
04FD0819 073012	1101121000 - 5431230	Justice Administration - Court Apptd Atty Dist Courts	195 00
		Warrant Total:	**195.00**
Warrant #: VW 00358914	**Payee Name: G & K SERVICES**		
1030128961	1101170100 - 5312101	Facilities Srvs & Maintenance - Uniform Expense	13 10
1030134844	1101170100 - 5312101	Facilities Srvs & Maintenance - Uniform Expense	13 10
1030136101	1101170100 - 5312101	Facilities Srvs & Maintenance - Uniform Expense	6 65
1030136102	1101522020 - 5312101	Parks Department - Uniform Expense	35 00
1030136109	1101170100 - 5312101	Facilities Srvs & Maintenance - Uniform Expense	13 40
1030136198	1101522020 - 5312101	Parks Department - Uniform Expense	54 39
1030137243	1101170100 - 5312101	Facilities Srvs & Maintenance - Uniform Expense	35 00
1030139622	1101522020 - 5312101	Parks Department - Uniform Expense	14 65

Galveston County, Texas

List of County Auditor's Approved Claims For Voucher Warrants Dated 08/21/2012

Invoice Number	Account Info		Amount
1030139624	1101522020 - 5312101	Parks Department - Uniform Expense	48 50
1030140707	1101170100 - 5312101	Facilities Srvs & Maintenance - Uniform Expense	13 10
1030141987	1101170100 - 5312101	Facilities Srvs & Maintenance - Uniform Expense	6 65
1030141988	1101522020 - 5312101	Parks Department - Uniform Expense	35 00
1030141989	1101544042 - 5312101	Beach Maintenance-Rd & Bridge - Uniform Expense	35 00
1030141995	1101170100 - 5312101	Facilities Srvs & Maintenance - Uniform Expense	13 00
1030142080	1101522020 - 5312101	Parks Department - Uniform Expense	54 39
1030145473	1101451110 - 5426106	Senior Citizens - Uniform Leasing	35 00
1030145474	1101522020 - 5312101	Parks Department - Uniform Expense	16 00
1030145476	1101522020 - 5312101	Parks Department - Uniform Expense	48 50
		Warrant Total:	**490.43**

Warrant #: VW 00358916 **Payee Name: GALVESTON COUNTY WCID #1**

30064065 080612	1101170100 - 5421100	Facilities Srvs & Maintenance - Water	32 14
		Warrant Total:	**32.14**

Warrant #: VW 00358917 **Payee Name: GAMMA WASTE SYSTEMS**

32937	1101170100 - 5412094	Facilities Srvs & Maintenance - CareHere Clinic Expenditu	140 00
		Warrant Total:	**140.00**

Warrant #: VW 00358918 **Payee Name: GARCIA, CHERI**

06/18-22/12	1101122300 - 5130000	Probate Court - Sullivan - Overtime	570 00
		Warrant Total:	**570.00**

Warrant #: VW 00358919 **Payee Name: GARRETT, FRED**

11CR3349 080912	1101121000 - 5431230	Justice Administration - Court Apptd Atty Dist Courts	113.75
		Warrant Total:	**113.75**

Warrant #: VW 00358920 **Payee Name: GELB, JEFFREY**

10CR3526 080812	1101121000 - 5431230	Justice Administration - Court Apptd Atty Dist Courts	406.25
12CR0806 080812	1101121000 - 5431230	Justice Administration - Court Apptd Atty Dist Courts	682 50
		Warrant Total:	**1,088.75**

Warrant #: VW 00358921 **Payee Name: GILLMAN, MICHAEL DAVID**

08CR3491 073112	1101121000 - 5431230	Justice Administration - Court Apptd Atty Dist Courts	260 00
		Warrant Total:	**260.00**

Warrant #: VW 00358922 **Payee Name: GLENN, DORYN DANNER**

2/17/12	1101126100 - 5310000	District Clerk - Supplies and Materials	121 05
		Warrant Total:	**121.05**

Warrant #: VW 00358923 **Payee Name: GLENN, DORYN DANNER**

2291104	1101000000 - 2291104	General Fund - DC-Refunds of Fees	100 00
		Warrant Total:	**100.00**

Warrant #: VW 00358924 **Payee Name: GLYWASKY, DONALD**

7/16-27/12 TRVL	1101153020 - 5496100	Trial Expense - Travel and Education	361 73
		Warrant Total:	**361.73**

Warrant #: VW 00358925 **Payee Name: GOLDSBERRY & ASSOCIATES PLLC**

323588 080212	1101122200 - 5431222	County Court #2 - Roberts - Defense Atty Co Ct #2	195 00
		Warrant Total:	**195.00**

Galveston County, Texas

List of County Auditor's Approved Claims For Voucher Warrants Dated 08/21/2012

Invoice Number	Account Info		Amoun
Warrant #: VW 00358926	**Payee Name: GOLDSBERRY & ASSOCIATES PLLC**		
01FD1325 080312	1101122200 - 5431222	County Court #2 - Roberts - Defense Atty Co Ct #2	130 00
12CP0035 080312	1101121000 - 5431230	Justice Administration - Court Apptd Atty Dist Courts	65 00
		Warrant Total:	**195.00**
Warrant #: VW 00358927	**Payee Name: GRAHAM, CARMEN A**		
10CR3554 081512	1101121000 - 5431230	Justice Administration - Court Apptd Atty Dist Courts	195 00
11CP0081 073112	1101121000 - 5431230	Justice Administration - Court Apptd Atty Dist Courts	214 50
12CR1542 072312	1101121000 - 5431230	Justice Administration - Court Apptd Atty Dist Courts	130 00
320015 080912	1101122200 - 5431222	County Court #2 - Roberts - Defense Atty Co Ct #2	318 50
		Warrant Total:	**858.00**
Warrant #: VW 00358928	**Payee Name: GRAYBAR ELECTRIC CO INC**		
961793425	1101159100 - 5310001	Information Technology - Depart Supplies-Non Cap FFE	755 50
961793426	1101159100 - 5310001	Information Technology - Depart Supplies-Non Cap FFE	241 30
961801120	1101159100 - 5310001	Information Technology - Depart Supplies-Non Cap FFE	64 20
		Warrant Total:	**1,061.00**
Warrant #: VW 00358933	**Payee Name: GULF COAST AEROBIC SERVICES**		
6142	1101522020 - 5424000	Parks Department - Maint & Repairs Buildings	102 00
6149	1101522020 - 5424000	Parks Department - Maint & Repairs Buildings	2,327 50
		Warrant Total:	**2,429.50**
Warrant #: VW 00358935	**Payee Name: GULFSIDE OVERHEAD DOOR COMPANY**		
577	1101170100 - 5424000	Facilities Srvs & Maintenance - Maint & Repairs Buildings	135 00
		Warrant Total:	**135.00**
Warrant #: VW 00358939	**Payee Name: HANSZEN LAPORTE LLP**		
8634420	1101000010 - 4414012	General Government - County Clerk Refund of Fees	10 00
		Warrant Total:	**10.00**
Warrant #: VW 00358940	**Payee Name: HENRY, THERESA**		
11CP0044	1101121000 - 5431230	Justice Administration - Court Apptd Atty Dist Courts	630 50
11CP0065 080912	1101121000 - 5431230	Justice Administration - Court Apptd Atty Dist Courts	887 25
11CP0082	1101121000 - 5431230	Justice Administration - Court Apptd Atty Dist Courts	234 00
12CP0032	1101121000 - 5431230	Justice Administration - Court Apptd Atty Dist Courts	695 50
12CR1595 081912	1101121000 - 5431230	Justice Administration - Court Apptd Atty Dist Courts	195 00
		Warrant Total:	**2,642.25**
Warrant #: VW 00358941	**Payee Name: HENRY, THERESA**		
12CR0923 080912	1101121000 - 5431230	Justice Administration - Court Apptd Atty Dist Courts	958 75
318064 060712	1101122100 - 5431221	County Court #1 - Grady - Defense Atty Co Ct	308 75
		Warrant Total:	**1,267.50**
Warrant #: VW 00358942	**Payee Name: HILL, KELLIE**		
8985	1101000050 - 4471011	Culture and Recreation - User Fees - Carbide Park	70.00
		Warrant Total:	**70.00**
Warrant #: VW 00358943	**Payee Name: HINDMAN, MARGARET**		
12CR1046 080712	1101121000 - 5431230	Justice Administration - Court Apptd Atty Dist Courts	195 00
12CR1569 081512	1101121000 - 5431230	Justice Administration - Court Apptd Atty Dist Courts	162 50

Galveston County, Texas

List of County Auditor's Approved Claims For Voucher Warrants Dated 08/21/2012

Invoice Number	Account Info		Amour
		Warrant Total:	**357.5**
Warrant #: VW 00358944	**Payee Name: HINDMAN, MARGARET**		
11CR2462 080612	1101121000 - 5431230	Justice Administration - Court Apptd Atty Dist Courts	763 7
		Warrant Total:	**763.7**
Warrant #: VW 00358945	**Payee Name: HOME DEPOT**		
3120146	1101522020 - 5424000	Parks Department - Maint & Repairs Buildings	24 13
3970023	1101522020 - 5424000	Parks Department - Maint & Repairs Buildings	98.10
5014683	1101522020 - 5424000	Parks Department - Maint & Repairs Buildings	155 68
6172973 031412	1101522020 - 5428000	Parks Department - Grounds Maintenance	340 85
8014675	1101522020 - 5424000	Parks Department - Maint & Repairs Buildings	186 61
8095835	1101522020 - 5424000	Parks Department - Maint & Repairs Buildings	240 70
		Warrant Total:	**1,046.07**
Warrant #: VW 00358947	**Payee Name: HTI LTD**		
SCH001111	1101170100 - 5481000	Facilities Srvs & Maintenance - Contract Service	3,914 03
		Warrant Total:	**3,914.03**
Warrant #: VW 00358949	**Payee Name: IBRAHIM & ELLIOTT LLP**		
09CR2345 041312	1101121000 - 5431230	Justice Administration - Court Apptd Atty Dist Courts	3,396 25
12CR0637 081012	1101121000 - 5431230	Justice Administration - Court Apptd Atty Dist Courts	276 25
		Warrant Total:	**3,672.50**
Warrant #: VW 00358950	**Payee Name: IBRAHIM & ELLIOTT LLP**		
11CR1454 081412	1101121000 - 5431230	Justice Administration - Court Apptd Atty Dist Courts	373 75
12CR1108 081212	1101121000 - 5431230	Justice Administration - Court Apptd Atty Dist Courts	406 25
JAIL DKT 080812	1101122200 - 5431222	County Court #2 - Roberts - Defense Atty Co Ct #2	760 00
		Warrant Total:	**1,540.00**
Warrant #: VW 00358951	**Payee Name: IESI TX CORP ENVIRO TEX**		
1500404199	1101170100 - 5481000	Facilities Srvs & Maintenance - Contract Service	98 95
		Warrant Total:	**98.95**
Warrant #: VW 00358956	**Payee Name: J. VARA INVESTIGATIONS**		
10CR0888 080612	1101121000 - 5431230	Justice Administration - Court Apptd Atty Dist Courts	900 00
		Warrant Total:	**900.00**
Warrant #: VW 00358958	**Payee Name: JACKSON, BARNEY**		
CANCELLATION	1101000050 - 4471025	Culture and Recreation - User Fees-JBrks Prk Arena	70 00
		Warrant Total:	**70.00**
Warrant #: VW 00358959	**Payee Name: JACKSON, ERIN LARENA**		
12CR0051 071412	1101121000 - 5431230	Justice Administration - Court Apptd Atty Dist Courts	516 75
		Warrant Total:	**516.75**
Warrant #: VW 00358961	**Payee Name: JALUFKA, GAIL**		
09CR2345 081412	1101121000 - 5411102	Justice Administration - Prof Serv Transcripts	2,064 00
		Warrant Total:	**2,064.00**
Warrant #: VW 00358963	**Payee Name: JOHNSON, CAROLYN MARKS**		
7/16 THRU 07/27	1101122100 - 5431302	County Court #1 - Grady - Fees & Expenses Relief Judges	5,654 80

Galveston County, Texas

List of County Auditor's Approved Claims For Voucher Warrants Dated 08/21/2012

Invoice Number	Account Info		Amoun
		Warrant Total:	**5,654.8(**
Warrant #: VW 00358964	**Payee Name: JONES LAW FIRM**		
09CR0778 080312	1101121000 - 5431230	Justice Administration - Court Apptd Atty Dist Courts	253 50
		Warrant Total:	**253.50**
Warrant #: VW 00358965	**Payee Name: JONES, STACEY LEE**		
11CR2361 081312	1101121000 - 5431230	Justice Administration - Court Apptd Atty Dist Courts	1,121 25
11CR2362 081312	1101121000 - 5431230	Justice Administration - Court Apptd Atty Dist Courts	2,388 75
ARI1200064	1101127100 - 5481000	District Attorney - Contract Service	3,599 75
		Warrant Total:	**7,109.75**
Warrant #: VW 00358966	**Payee Name: JONES, STACEY LEE**		
11CR3274 080712	1101121000 - 5431230	Justice Administration - Court Apptd Atty Dist Courts	1,056 25
11CR3583 081312	1101121000 - 5431230	Justice Administration - Court Apptd Atty Dist Courts	650 00
312310 070912	1101122100 - 5431221	County Court #1 - Grady - Defense Atty Co Ct	633 75
317328 080712	1101122400 - 5431221	County Court #3 - Dupuy - Defense Atty Co Ct	845 00
		Warrant Total:	**3,185.00**
Warrant #: VW 00358967	**Payee Name: JP MORGAN CHASE**		
AUGUST 2012 STMT	1101000000 - 1800005	General Fund - P Crd #1504	200 00
AUGUST 2012 STMT	1101000000 - 1800009	General Fund - P Crd #5147	220 00
AUGUST 2012 STMT	1101000000 - 1800011	General Fund - P Crd #5303	12 95
AUGUST 2012 STMT	1101000000 - 1800015	General Fund - P Crd #5154	135 29
AUGUST 2012 STMT	1101000000 - 1800020	General Fund - P Crd #8745	235 68
AUGUST 2012 STMT	1101000000 - 1800022	General Fund - P Crd #7436	899 87
AUGUST 2012 STMT	1101000000 - 1800029	General Fund - P Crd #5264	112 04
AUGUST 2012 STMT	1101000000 - 1800033	General Fund - P Crd #8334	514 80
AUGUST 2012 STMT	1101000000 - 1800038	General Fund - P Crd #7221	776 80
AUGUST 2012 STMT	1101000000 - 1800039	General Fund - P Crd #7388	16,055 12
AUGUST 2012 STMT	1101000000 - 1800043	General Fund - P Crd #9831	199 00
AUGUST 2012 STMT	1101000000 - 1800048	General Fund - P Crd #3383	176 64
AUGUST 2012 STMT	1101000000 - 1800051	General Fund - P Crd #5647	54,719 69
AUGUST 2012 STMT	1101000000 - 1800052	General Fund - P Crd #4517	314 51
AUGUST 2012 STMT	1101000000 - 1800055	General Fund - P Crd #4475	700 49
AUGUST 2012 STMT	1101000000 - 1800056	General Fund - P Crd #4509	820 42
AUGUST 2012 STMT	1101000000 - 1800071	General Fund - P Card #4653	253 11
AUGUST 2012 STMT	1101000000 - 1800087	General Fund - P Card #2192	1,567 84
AUGUST 2012 STMT	1101000000 - 1800089	General Fund - P Card #1245	126 36
AUGUST 2012 STMT	1101000000 - 1800090	General Fund - P Card #1421	179 16
AUGUST 2012 STMT	1101000000 - 1800092	General Fund - P Card #2440	211 90
AUGUST 2012 STMT	1101000000 - 1800093	General Fund - P Card #5392	547.07
AUGUST 2012 STMT	1101000000 - 1800094	General Fund - P Card #6304	8,563 00
AUGUST 2012 STMT	1101000000 - 1800095	General Fund - P Card #6129	1,288 56
AUGUST 2012 STMT	1101000000 - 1800097	General Fund - P Card #6650	13,167 42
AUGUST 2012 STMT	1101000000 - 1800098	General Fund - P Card #1654	233 50
AUGUST 2012 STMT	1101000000 - 1800101	General Fund - P Card #5468	56,442 55
AUGUST 2012 STMT	1101000000 - 1800102	General Fund - P Card #0469	147 71
AUGUST 2012 STMT	1101000000 - 1800105	General Fund - P Card #1173	1,043 28
AUGUST 2012 STMT	1101000000 - 1800106	General Fund - P Card #1199	1,290 00
AUGUST 2012 STMT	1101000000 - 1800115	General Fund - P Card #5749	964 47
AUGUST 2012 STMT	1101000000 - 1800117	General Fund - P Card #4746	53 77
AUGUST 2012 STMT	1101000000 - 1800123	General Fund - P Crd #6093	930 13

Galveston County, Texas

List of County Auditor's Approved Claims For Voucher Warrants Dated 08/21/2012

Invoice Number	Account Info		Amount
AUGUST 2012 STMT	1101000000 - 1800124	General Fund - P Crd #9216	460 00
AUGUST 2012 STMT	1101000000 - 1800126	General Fund - P Card #3259	-21 07
AUGUST 2012 STMT	1101000000 - 1800128	General Fund - P Card #6407	9,930 11
AUGUST 2012 STMT	1101000000 - 1800132	General Fund - P Card #3474	2,941 83
AUGUST 2012 STMT	1101000000 - 1800138	General Fund - P Card #0858	53 24
AUGUST 2012 STMT	1101000000 - 1800139	General Fund - P Card #9373	158 94
AUGUST 2012 STMT	1101000000 - 1800141	General Fund - P Card #7980	282 71
AUGUST 2012 STMT	1101000000 - 1800142	General Fund - P Card #7253	26,070 01
AUGUST 2012 STMT	1101000000 - 1800143	General Fund - P Card #7937	204 81
AUGUST 2012 STMT	1101000000 - 1800146	General Fund - P Card #0040	467 68
AUGUST 2012 STMT	1101000000 - 1800147	General Fund - P Card #0057	114 28
AUGUST 2012 STMT	1101000000 - 1800151	General Fund - P Card #2285	8,177 34
AUGUST 2012 STMT	1101000000 - 1800152	General Fund - P Card #2301	362 10
AUGUST 2012 STMT	1101000000 - 1800153	General Fund - P Card #2244	186 91
AUGUST 2012 STMT	1101000000 - 1800158	General Fund - P Card #3896	2,125 68
AUGUST 2012 STMT	1101000000 - 1800160	General Fund - P Card #3862	657 69
AUGUST 2012 STMT	1101000000 - 1800162	General Fund - P Card #3813	55 12
AUGUST 2012 STMT	1101000000 - 1800167	General Fund - P Card #5683	183 25
AUGUST 2012 STMT	1101000000 - 1800168	General Fund - P Card #5691	388 93
AUGUST 2012 STMT	1101000000 - 1800169	General Fund - P Card #2369	69 74
AUGUST 2012 STMT	1101000000 - 1800181	General Fund - P Card #9936	302.77
AUGUST 2012 STMT	1101000000 - 1800186	General Fund - P Card #9003	1,060 00
AUGUST 2012 STMT	1101000000 - 1800187	General Fund - P Card #6897	255 61
AUGUST 2012 STMT	1101000000 - 1800188	General Fund - P Card #0614	386 11
AUGUST 2012 STMT	1101000000 - 1801006	General Fund - P Crd #9482	117 06
AUGUST 2012 STMT	1101000000 - 1801011	General Fund - P Crd #1703	85 38
AUGUST 2012 STMT	1101000000 - 1801018	General Fund - P Crd #7038	1,755 00
AUGUST 2012 STMT	1101000000 - 1801028	General Fund - P Crd #4344	480 10
AUGUST 2012 STMT	1101000000 - 1801029	General Fund - P Crd #8024	1,191 62
AUGUST 2012 STMT	1101000000 - 1801030	General Fund - P Crd #0043	461.18
AUGUST 2012 STMT	1101000000 - 1801031	General Fund - P Crd #8147	433 33
AUGUST 2012 STMT	1101000000 - 1801034	General Fund - P Crd #7451	121 38
AUGUST 2012 STMT	1101000000 - 1801043	General Fund - P Crd #0713	712.03
AUGUST 2012 STMT	1101000000 - 1801046	General Fund - P Crd #3375	634 56
AUGUST 2012 STMT	1101000000 - 1801051	General Fund - P Crd #0876	378 13
AUGUST 2012 STMT	1101000000 - 1801073	General Fund - P Crd #9763	550 00
AUGUST 2012 STMT	1101000000 - 1801115	General Fund - P Card #0861	300 00
AUGUST 2012 STMT	1101000000 - 1801119	General Fund - P Card #0183	145 50
AUGUST 2012 STMT	1101000000 - 1801120	General Fund - P Card #0308	1,648 00
AUGUST 2012 STMT	1101000000 - 1801121	General Fund - P Card #0316	298 41
AUGUST 2012 STMT	1101000000 - 1801124	General Fund - P Card #4845	1,454 91
AUGUST 2012 STMT	1101000000 - 1801128	General Fund - P Card #4154	44 17
AUGUST 2012 STMT	1101000000 - 1801129	General Fund - P Card #4188	1,737 87
AUGUST 2012 STMT	1101000000 - 1801133	General Fund - P Card #8613	215 72
AUGUST 2012 STMT	1101000000 - 1801139	General Fund - P Crd #0135	188 10
AUGUST 2012 STMT	1101000000 - 1801141	General Fund - P Crd #7885	11 99
AUGUST 2012 STMT	1101000000 - 1801149	General Fund - P Card #3200	277 59
AUGUST 2012 STMT	1101000000 - 1801158	General Fund - P Card #7495	1,066 13
AUGUST 2012 STMT	1101000000 - 1801160	General Fund - P Card #7536	112 36
AUGUST 2012 STMT	1101000000 - 1801178	General Fund - P Card #0832	254 13
AUGUST 2012 STMT	1101000000 - 1801180	General Fund - P Card #4116	259 21
AUGUST 2012 STMT	1101000000 - 1801190	General Fund - P Card #0846	285 00
AUGUST 2012 STMT	1101000000 - 1801192	General Fund - P Card #7044	160 31
AUGUST 2012 STMT	1101000000 - 1801193	General Fund - P Card #4628	316 44

Galveston County, Texas

List of County Auditor's Approved Claims For Voucher Warrants Dated 08/21/2012

Invoice Number	Account Info		Amoun
AUGUST 2012 STMT	1101000000 - 1801204	General Fund - P Card #1936	6 5(
AUGUST 2012 STMT	1101000000 - 1803011	General Fund - P Crd #3495	741 5;
AUGUST 2012 STMT	1101000000 - 1803015	General Fund - P Card #2319	183 83
AUGUST 2012 STMT	1101000000 - 1803020	General Fund - P Card #6842	227 46
AUGUST 2012 STMT	1101000000 - 1804004	General Fund - P Card #7289	620.86
AUGUST 2012 STMT	1101000000 - 1804009	General Fund - P Card #6246	70 61
AUGUST 2012 STMT	1101000000 - 1809003	General Fund - P Card #0640	13 12
AUGUST 2012 STMT	1101000000 - 1809006	General Fund - P Card #9362	771 85
AUGUST 2012 STMT	1101000000 - 1809008	General Fund - P Card #3636	74 12
		Warrant Total:	**236,382.45**

Warrant #: VW 00358969 **Payee Name: KENNIE, MARGARET**

8/7,8/08,8/14-15	1101121000 - 5481000	Justice Administration - Contract Service	650 00
		Warrant Total:	**650.00**

Warrant #: VW 00358970 **Payee Name: KIESCHNICK, JONATHAN C**

12CR0500 080312	1101121000 - 5431230	Justice Administration - Court Apptd Atty Dist Courts	146 25
12CR0767 080367	1101121000 - 5431230	Justice Administration - Court Apptd Atty Dist Courts	390 00
319107 080312	1101122400 - 5431221	County Court #3 - Dupuy - Defense Atty Co Ct	130 00
323572 080612	1101122100 - 5431221	County Court #1 - Grady - Defense Atty Co Ct	97 50
		Warrant Total:	**763.75**

Warrant #: VW 00358972 **Payee Name: KLEEN JANITORIAL SUPPLY COMPANY**

2240	1101170100 - 5481000	Facilities Srvs & Maintenance - Contract Service	1,587.93
2241	1101170100 - 5481000	Facilities Srvs & Maintenance - Contract Service	2,101 92
2251	1101170100 - 5481000	Facilities Srvs & Maintenance - Contract Service	1,750 40
2260	1101211133 - 5310000	Sheriff-Corrections - Supplies and Materials	1,081 23
		Warrant Total:	**6,521.48**

Warrant #: VW 00358974 **Payee Name: KONE INC**

220964957	1101170100 - 5423701	Facilities Srvs & Maintenance - Maintenance Contracts	1,503 50
		Warrant Total:	**1,503.50**

Warrant #: VW 00358975 **Payee Name: KUTSCHKE, MELINDA**

11CR1878 060812	1101121000 - 5431230	Justice Administration - Court Apptd Atty Dist Courts	1,300 00
		Warrant Total:	**1,300.00**

Warrant #: VW 00358977 **Payee Name: LAW OFFICE OF ALEX BILL III**

321495 080812	1101122400 - 5431221	County Court #3 - Dupuy - Defense Atty Co Ct	292 50
		Warrant Total:	**292.50**

Warrant #: VW 00358978 **Payee Name: LAW OFFICE OF DONNA L LELEUX**

10CP0058 080112	1101121000 - 5431230	Justice Administration - Court Apptd Atty Dist Courts	273 00
11CP0019 080112	1101121000 - 5431230	Justice Administration - Court Apptd Atty Dist Courts	84 50
		Warrant Total:	**357.50**

Warrant #: VW 00358979 **Payee Name: LAW OFFICE OF MICHELE BASSETT**

12JV0266 080812	1101121000 - 5431230	Justice Administration - Court Apptd Atty Dist Courts	81 25
JULY 2012 ATTY	1101121000 - 5431230	Justice Administration - Court Apptd Atty Dist Courts	1,800 00
		Warrant Total:	**1,881.25**

Warrant #: VW 00358980 **Payee Name: LAW OFFICE OF PHILLIP M. DAVIS**

Galveston County, Texas

List of County Auditor's Approved Claims For Voucher Warrants Dated 08/21/2012

Invoice Number	Account Info		Amour
322349	1101122200 - 5310000	County Court #2 - Roberts - Supplies and Materials	12 9
322349	1101122200 - 5431222	County Court #2 - Roberts - Defense Atty Co Ct #2	432 0
		Warrant Total:	**445.0**
Warrant #: VW 00358981	**Payee Name: LAW OFFICE OF SHAW CLIFFORD**		
321867 080312	1101122400 - 5431221	County Court #3 - Dupuy - Defense Atty Co Ct	682 5
		Warrant Total:	**682.50**
Warrant #: VW 00358982	**Payee Name: LAW OFFICES OF DAVID P WALKER PC**		
320154 080712	1101122400 - 5431221	County Court #3 - Dupuy - Defense Atty Co Ct	182 00
		Warrant Total:	**182.00**
Warrant #: VW 00358983	**Payee Name: LAWRENCE AND BACA PLLC**		
20123237CC	1101000010 - 4414012	General Government - County Clerk Refund of Fees	5 00
		Warrant Total:	**5.00**
Warrant #: VW 00358984	**Payee Name: LEE, DALE W**		
09CR3375	1101153020 - 5431000	Trial Expense - Trial Expense	1,268 00
		Warrant Total:	**1,268.00**
Warrant #: VW 00358988	**Payee Name: LEWIS, DELORIS**		
CANCELLATION	1101000050 - 4471011	Culture and Recreation - User Fees - Carbide Park	100 00
		Warrant Total:	**100.00**
Warrant #: VW 00358989	**Payee Name: LIGGIOS TIRE AND SERVICE CENTER INC**		
185114	1101172111 - 5423110	Fleet Mgmt-Galveston - Auto Maintenance	93 68
185309	1101172111 - 5423110	Fleet Mgmt-Galveston - Auto Maintenance	659 88
185354	1101172111 - 5423110	Fleet Mgmt-Galveston - Auto Maintenance	39 75
185387	1101172111 - 5423110	Fleet Mgmt-Galveston - Auto Maintenance	433 68
185408	1101172111 - 5423110	Fleet Mgmt-Galveston - Auto Maintenance	55 00
185425	1101172111 - 5423110	Fleet Mgmt-Galveston - Auto Maintenance	39 75
185446	1101172111 - 5423110	Fleet Mgmt-Galveston - Auto Maintenance	473.00
185524	1101172111 - 5423110	Fleet Mgmt-Galveston - Auto Maintenance	31 25
185593	1101172111 - 5423110	Fleet Mgmt-Galveston - Auto Maintenance	67 75
185631	1101172111 - 5423110	Fleet Mgmt-Galveston - Auto Maintenance	827 84
185666	1101172111 - 5423110	Fleet Mgmt-Galveston - Auto Maintenance	567 30
185702	1101172111 - 5423110	Fleet Mgmt-Galveston - Auto Maintenance	54 73
185716	1101172111 - 5423110	Fleet Mgmt-Galveston - Auto Maintenance	54 73
185717	1101172111 - 5423110	Fleet Mgmt-Galveston - Auto Maintenance	46 28
185884	1101172111 - 5423110	Fleet Mgmt-Galveston - Auto Maintenance	130 39
185924	1101172111 - 5423110	Fleet Mgmt-Galveston - Auto Maintenance	201 50
		Warrant Total:	**3,776.51**
Warrant #: VW 00358990	**Payee Name: LINDBLADE, ALLISON**		
8/3-6/12 TRVL	1101127100 - 5496301	District Attorney - Auto Mileage	55 50
		Warrant Total:	**55.50**
Warrant #: VW 00358991	**Payee Name: LJA ENGINEERING & SURVEYING INC**		
20123626	1101000000 - 2460020	General Fund - Permit Deposits	536 53
		Warrant Total:	**536.53**
Warrant #: VW 00358992	**Payee Name: LOVE, PAUL**		

Galveston County, Texas

List of County Auditor's Approved Claims For Voucher Warrants Dated 08/21/2012

Invoice Number	Account Info		Amour
11CR2448 081012	1101121000 - 5431230	Justice Administration - Court Apptd Atty Dist Courts	227 5
		Warrant Total:	**227.5**
Warrant #: VW 00358993	**Payee Name: M BRUCE FORT PC**		
12CR0166 080712	1101121000 - 5431230	Justice Administration - Court Apptd Atty Dist Courts	1,189 5
		Warrant Total:	**1,189.50**
Warrant #: VW 00358994	**Payee Name: M FOX CURL AND ASSOCIATES PC**		
11CR2954 081012	1101121000 - 5431230	Justice Administration - Court Apptd Atty Dist Courts	1,106 30
		Warrant Total:	**1,106.30**
Warrant #: VW 00358998	**Payee Name: MALONEY & PARKS LLP**		
04CR1155 061512	1101121000 - 5431230	Justice Administration - Court Apptd Atty Dist Courts	390 00
12CR0980 080912	1101121000 - 5431230	Justice Administration - Court Apptd Atty Dist Courts	422 50
		Warrant Total:	**812.50**
Warrant #: VW 00358999	**Payee Name: MARCUS, AARON C.**		
JUL 2012 MLG	1101114030 - 5496301	Election Expense - Auto Mileage	58 97
		Warrant Total:	**58.97**
Warrant #: VW 00359000	**Payee Name: MARION, WILLIAM DAVID**		
318919 072012	1101122100 - 5431221	County Court #1 - Grady - Defense Atty Co Ct	221 00
		Warrant Total:	**221.00**
Warrant #: VW 00359001	**Payee Name: MARKETING SPECIALTIES INC**		
2995	1101211132 - 5310000	M H M R -Sheriff - Supplies and Materials	412 00
		Warrant Total:	**412.00**
Warrant #: VW 00359002	**Payee Name: MARY MOODY NORTHEN ENDOWMENT**		
MMN DEED 072412	1101170100 - 5504013	Facilities Srvs & Maintenance - Spec Warranty Deed 2219 M	400,000.00
		Warrant Total:	**400,000.00**
Warrant #: VW 00359003	**Payee Name: MASTER WORD SERVICE INC**		
52406	1101121000 - 5431101	Justice Administration - Professional Srv Interpreter	4,749 27
		Warrant Total:	**4,749.27**
Warrant #: VW 00359004	**Payee Name: MATHESON TRI-GAS INC**		
05169602	1101211133 - 5310000	Sheriff-Corrections - Supplies and Materials	229 79
05169603	1101522020 - 5310000	Parks Department - Supplies and Materials	68 84
		Warrant Total:	**298.63**
Warrant #: VW 00359005	**Payee Name: MCCARNES, LOIS**		
07CR3260 080612	1101121000 - 5431230	Justice Administration - Court Apptd Atty Dist Courts	1,706 25
09CR3517 080812	1101121000 - 5431230	Justice Administration - Court Apptd Atty Dist Courts	195 00
11CR3644 081512	1101121000 - 5431230	Justice Administration - Court Apptd Atty Dist Courts	243 75
		Warrant Total:	**2,145.00**
Warrant #: VW 00359006	**Payee Name: MCQUAGE PC, THOMAS W**		
7/19/10-7/31/12	1101000000 - 2460023	General Fund - District Clerk Tax Master	8,515 30
		Warrant Total:	**8,515.30**
Warrant #: VW 00359008	**Payee Name: MEIER, SHARON K**		

Galveston County, Texas

List of County Auditor's Approved Claims For Voucher Warrants Dated 08/21/2012

Invoice Number	Account Info		Amount
JAIL DKT 080312	1101122200 - 5431222	County Court #2 - Roberts - Defense Atty Co Ct #2	570 00
		Warrant Total:	**570.00**
Warrant #: VW 00359009	**Payee Name: MELAMED, SANFORD**		
11CR0414 081612	1101121000 - 5431230	Justice Administration - Court Apptd Atty Dist Courts	130 00
		Warrant Total:	**130.00**
Warrant #: VW 00359015	**Payee Name: MILLER, ROBERT DAVID**		
12CR0577 080312	1101121000 - 5431230	Justice Administration - Court Apptd Atty Dist Courts	487 50
12CR0885 081512	1101121000 - 5431230	Justice Administration - Court Apptd Atty Dist Courts	260 00
		Warrant Total:	**747.50**
Warrant #: VW 00359018	**Payee Name: MONTY NICHOLS INC**		
37295	1101190100 - 5310000	County Engineer - Supplies and Materials	48 00
		Warrant Total:	**48.00**
Warrant #: VW 00359019	**Payee Name: MOODY NATIONAL BANK**		
JUN 12 REMOTE	1101151500 - 5481000	Tax Assessor Collector - Contract Service	69 76
		Warrant Total:	**69.76**
Warrant #: VW 00359020	**Payee Name: MUELLER, DINAH J**		
10CP0103 061812	1101121000 - 5431230	Justice Administration - Court Apptd Atty Dist Courts	247 00
11CP0083 080612	1101121000 - 5431230	Justice Administration - Court Apptd Atty Dist Courts	283 80
12CP0055 080612	1101121000 - 5431230	Justice Administration - Court Apptd Atty Dist Courts	409 20
		Warrant Total:	**940.00**
Warrant #: VW 00359021	**Payee Name: NAJER, MAURICE**		
324195 073112	1101122400 - 5431221	County Court #3 - Dupuy - Defense Atty Co Ct	195 00
		Warrant Total:	**195.00**
Warrant #: VW 00359023	**Payee Name: NELSON, TAD A.**		
10CR0762 080812	1101121000 - 5431000	Justice Administration - Trial Expense	33 49
10CR0762 080812	1101121000 - 5431230	Justice Administration - Court Apptd Atty Dist Courts	3,861 00
		Warrant Total:	**3,894.49**
Warrant #: VW 00359024	**Payee Name: NGUYEN, JASON**		
7/31/12 MLG	1101114030 - 5496301	Election Expense - Auto Mileage	44 00
		Warrant Total:	**44.00**
Warrant #: VW 00359025	**Payee Name: NICHOLSON, CONNIE**		
JULY 2012	1101440100 - 5496301	Community Services - Auto Mileage	81 59
		Warrant Total:	**81.59**
Warrant #: VW 00359027	**Payee Name: NRG ENERGY INC**		
66296393	1101443100 - 5447200	Indigent Care & Medication - Emergency Assistance	144 66
702729567	1101443100 - 5447200	Indigent Care & Medication - Emergency Assistance	126 11
702875634 0712	1101443100 - 5447200	Indigent Care & Medication - Emergency Assistance	100 00
76440106	1101443100 - 5447200	Indigent Care & Medication - Emergency Assistance	109 75
79902086 0712	1101443100 - 5447200	Indigent Care & Medication - Emergency Assistance	100 00
		Warrant Total:	**580.52**
Warrant #: VW 00359030	**Payee Name: ORTIZ-TAING LAW FIRM PC**		

Galveston County, Texas

List of County Auditor's Approved Claims For Voucher Warrants Dated 08/21/2012

Invoice Number	Account Info		Amoun
321072 081512	1101122400 - 5431221	County Court #3 - Dupuy - Defense Atty Co Ct	260 00
		Warrant Total:	**260.00**
Warrant #: VW 00359031	**Payee Name: OWEN ELECTRIC SUPPLY**		
2645424443	1101170100 - 5310000	Facilities Srvs & Maintenance - Supplies and Materials	20 50
2645424526	1101170100 - 5310000	Facilities Srvs & Maintenance - Supplies and Materials	269 20
		Warrant Total:	**289.70**
Warrant #: VW 00359032	**Payee Name: PALMER, MICHAEL**		
11VT2399 081512	1101121000 - 5431230	Justice Administration - Court Apptd Atty Dist Courts	422 50
		Warrant Total:	**422.50**
Warrant #: VW 00359035	**Payee Name: PENINSULA SANITATION SERVICE INC**		
59928	1101544042 - 5421400	Beach Maintenance-Rd & Bridge - Refuse Disposal	450 00
59933	1101544042 - 5421400	Beach Maintenance-Rd & Bridge - Refuse Disposal	450 00
59963	1101544042 - 5421400	Beach Maintenance-Rd & Bridge - Refuse Disposal	1,350 00
59991	1101544042 - 5421400	Beach Maintenance-Rd & Bridge - Refuse Disposal	450 00
60022	1101544042 - 5421400	Beach Maintenance-Rd & Bridge - Refuse Disposal	450 00
60041	1101544042 - 5421400	Beach Maintenance-Rd & Bridge - Refuse Disposal	450.00
60051	1101544042 - 5421400	Beach Maintenance-Rd & Bridge - Refuse Disposal	450 00
		Warrant Total:	**4,050.00**
Warrant #: VW 00359036	**Payee Name: PESTMASTER SERVICES INC**		
11135	1101170100 - 5481000	Facilities Srvs & Maintenance - Contract Service	350 50
		Warrant Total:	**350.50**
Warrant #: VW 00359037	**Payee Name: PETROFF, KEVIN**		
JUL 27 2012 MEAL	1101127100 - 5496100	District Attorney - Travel and Education	68 00
		Warrant Total:	**68.00**
Warrant #: VW 00359039	**Payee Name: PORTER HEDGES LLP**		
866300	1101000010 - 4414012	General Government - County Clerk Refund of Fees	9 00
		Warrant Total:	**9.00**
Warrant #: VW 00359042	**Payee Name: QUINTANILLA, DONNIE**		
11CR3301 072012	1101121000 - 5431230	Justice Administration - Court Apptd Atty Dist Courts	780 00
11CR3480 080712	1101121000 - 5431230	Justice Administration - Court Apptd Atty Dist Courts	617 50
JAIL DKT 080912	1101122400 - 5431221	County Court #3 - Dupuy - Defense Atty Co Ct	195 00
		Warrant Total:	**1,592.50**
Warrant #: VW 00359044	**Payee Name: R M SILKSCREEN**		
F8614	1101522020 - 5312101	Parks Department - Uniform Expense	1,485 00
		Warrant Total:	**1,485.00**
Warrant #: VW 00359047	**Payee Name: REED, WILLIAM**		
7/5/12 RMB	1101127100 - 5310000	District Attorney - Supplies and Materials	25 00
		Warrant Total:	**25.00**
Warrant #: VW 00359048	**Payee Name: ROBERTS, BARBARA**		
7605	1101121000 - 5495100	Justice Administration - Education	195 00
		Warrant Total:	**195.00**

Galveston County, Texas

List of County Auditor's Approved Claims For Voucher Warrants Dated 08/21/2012

Invoice Number	Account Info		Amou
Warrant #: VW 00359050	**Payee Name: RUSSELL, GREG**		
08CR3363 081012	1101121000 - 5431230	Justice Administration - Court Apptd Atty Dist Courts	146 2
10CR1430 080912	1101121000 - 5431000	Justice Administration - Trial Expense	80 1
10CR1430 080912	1101121000 - 5431230	Justice Administration - Court Apptd Atty Dist Courts	1,885 0
12JV0160 080112	1101121000 - 5431230	Justice Administration - Court Apptd Atty Dist Courts	130 0
319616/319619	1101122200 - 5431222	County Court #2 - Roberts - Defense Atty Co Ct #2	195 0
		Warrant Total:	**2,436.4**
Warrant #: VW 00359051	**Payee Name: SAENZ, ALVIN N**		
320435 080912	1101122200 - 5431222	County Court #2 - Roberts - Defense Atty Co Ct #2	487 50
324347 080812	1101122200 - 5431222	County Court #2 - Roberts - Defense Atty Co Ct #2	260 00
		Warrant Total:	**747.50**
Warrant #: VW 00359052	**Payee Name: SAFETY KLEEN CORP**		
58407456	1101522020 - 5310000	Parks Department - Supplies and Materials	283 18
		Warrant Total:	**283.18**
Warrant #: VW 00359053	**Payee Name: SANTA FE AUTO PARTS INC**		
97905 072312	1101522020 - 5423000	Parks Department - Maint/Repairs Equipment	39 95
98179	1101522020 - 5423000	Parks Department - Maint/Repairs Equipment	124 39
98795	1101522020 - 5423000	Parks Department - Maint/Repairs Equipment	62 19
		Warrant Total:	**226.53**
Warrant #: VW 00359055	**Payee Name: SCHULT, JENNIFER**		
CONC FAM ISSUE	1101000050 - 4471025	Culture and Recreation - User Fees-JBrks Prk Arena	230 00
		Warrant Total:	**230.00**
Warrant #: VW 00359056	**Payee Name: SCOTT, SHELBY**		
10CR2020	1101121000 - 5431230	Justice Administration - Court Apptd Atty Dist Courts	276 25
11CR0009 073112	1101121000 - 5431230	Justice Administration - Court Apptd Atty Dist Courts	520 00
11CR35931 071712	1101121000 - 5431230	Justice Administration - Court Apptd Atty Dist Courts	260 00
12VT1313 071712	1101121000 - 5431230	Justice Administration - Court Apptd Atty Dist Courts	227 50
		Warrant Total:	**1,283.75**
Warrant #: VW 00359057	**Payee Name: SCOTT, SHELBY**		
JAIL DKT 080312	1101121000 - 5431230	Justice Administration - Court Apptd Atty Dist Courts	950 00
		Warrant Total:	**950.00**
Warrant #: VW 00359058	**Payee Name: SEARS & BENNETT LLP**		
09CR3846A 080712	1101121000 - 5431230	Justice Administration - Court Apptd Atty Dist Courts	341 25
		Warrant Total:	**341.25**
Warrant #: VW 00359059	**Payee Name: SHAWHAN, MATTHEW**		
AUG 1 2012 MLG	1101127100 - 5496301	District Attorney - Auto Mileage	74 37
		Warrant Total:	**74.37**
Warrant #: VW 00359060	**Payee Name: SHERMAN WATKINS PLLC**		
321286 071612	1101121000 - 5431230	Justice Administration - Court Apptd Atty Dist Courts	195 00
		Warrant Total:	**195.00**
Warrant #: VW 00359061	**Payee Name: SHETTLE, AUBYN KEITH**		
20123860CC	1101000010 - 4414012	General Government - County Clerk Refund of Fees	150 00

Galveston County, Texas

List of County Auditor's Approved Claims For Voucher Warrants Dated 08/21/2012

Invoice Number	Account Info		Amoun
		Warrant Total:	**150.0(**
Warrant #: VW 00359062	**Payee Name: SIEMENS BUILDING TECHNOLOGIES INC**		
5442509942	1101170100 - 5424000	Facilities Srvs & Maintenance - Maint & Repairs Buildings	500 00
		Warrant Total:	**500.00**
Warrant #: VW 00359063	**Payee Name: SILVER STAR TITLE**		
867600	1101000010 - 4414012	General Government - County Clerk Refund of Fees	40 00
		Warrant Total:	**40.00**
Warrant #: VW 00359064	**Payee Name: SIMMONS, MARILYN H**		
SEWING MACH REPAI	101610200 - 5495100	County Extension - Education	120 00
		Warrant Total:	**120.00**
Warrant #: VW 00359065	**Payee Name: SMITH, MEGHANN**		
322890 080712	1101122400 - 5431221	County Court #3 - Dupuy - Defense Atty Co Ct	227 50
		Warrant Total:	**227.50**
Warrant #: VW 00359066	**Payee Name: SNOOK, KELLY**		
AUG 3 2012	1101000000 - 1011013	General Fund - Change Fund-County Clerk	100 00
		Warrant Total:	**100.00**
Warrant #: VW 00359067	**Payee Name: SOLUTIONS4SURE.COM INC**		
B120711500V1	1101159100 - 5310000	Information Technology - Supplies and Materials	96 08
		Warrant Total:	**96.08**
Warrant #: VW 00359070	**Payee Name: STATE BAR OF TEXAS**		
244531	1101153000 - 5317000	Legal Department - Books & Periodicals	137 00
		Warrant Total:	**137.00**
Warrant #: VW 00359072	**Payee Name: STERLING LAW FIRM, THE**		
JAIL DKT 081012	1101122400 - 5431221	County Court #3 - Dupuy - Defense Atty Co Ct	950 00
		Warrant Total:	**950.00**
Warrant #: VW 00359073	**Payee Name: STEVE'S WAREHOUSE TIRES**		
670	1101211101 - 5423110	Administration Sheriff Dept - Auto Maintenance	15 00
		Warrant Total:	**15.00**
Warrant #: VW 00359074	**Payee Name: STEVENS, MARK W**		
11CR1254 080912	1101121000 - 5431230	Justice Administration - Court Apptd Atty Dist Courts	604.00
12CR0469 081512	1101121000 - 5431230	Justice Administration - Court Apptd Atty Dist Courts	240 00
		Warrant Total:	**844.00**
Warrant #: VW 00359075	**Payee Name: STICKLER, TOMMY JAMES**		
10CR3473 080712	1101121000 - 5431230	Justice Administration - Court Apptd Atty Dist Courts	195 00
12CR0265 080712	1101121000 - 5431230	Justice Administration - Court Apptd Atty Dist Courts	362.50
321028 080712	1101122100 - 5431221	County Court #1 - Grady - Defense Atty Co Ct	260 00
323743 080712	1101122100 - 5431221	County Court #1 - Grady - Defense Atty Co Ct	227 50
		Warrant Total:	**1,045.00**
Warrant #: VW 00359076	**Payee Name: SUHLER, DAVID**		
12CR0664 072612	1101121000 - 5431230	Justice Administration - Court Apptd Atty Dist Courts	330 00

Galveston County, Texas

List of County Auditor's Approved Claims For Voucher Warrants Dated 08/21/2012

Invoice Number	Account Info		Amoun
		Warrant Total:	**330.00**
Warrant #: VW 00359078	**Payee Name: SULLIVAN, KIMBERLY A**		
6309	1101122300 - 5310000	Probate Court - Sullivan - Supplies and Materials	23 80
		Warrant Total:	**23.80**
Warrant #: VW 00359079	**Payee Name: SUN COAST RESOURCES INC**		
91459910	1101170100 - 5424000	Facilities Srvs & Maintenance - Maint & Repairs Buildings	50 00
91469892	1101170100 - 5424000	Facilities Srvs & Maintenance - Maint & Repairs Buildings	50 00
91469918	1101170100 - 5424000	Facilities Srvs & Maintenance - Maint & Repairs Buildings	50 00
		Warrant Total:	**150.00**
Warrant #: VW 00359080	**Payee Name: SUNGARD PUBLIC SECTOR INC**		
54115	1101159100 - 5481000	Information Technology - Contract Service	8,630 18
		Warrant Total:	**8,630.18**
Warrant #: VW 00359081	**Payee Name: SUTHERLAND LUMBER SOUTHWEST INC**		
213232	1101522020 - 5424000	Parks Department - Maint & Repairs Buildings	-425 33
213291	1101522020 - 5424000	Parks Department - Maint & Repairs Buildings	21 64
213294	1101522020 - 5424000	Parks Department - Maint & Repairs Buildings	7 28
213306	1101522020 - 5424000	Parks Department - Maint & Repairs Buildings	7 99
213324	1101522020 - 5424000	Parks Department - Maint & Repairs Buildings	4 45
213328	1101522020 - 5424000	Parks Department - Maint & Repairs Buildings	11 99
213329	1101522020 - 5424000	Parks Department - Maint & Repairs Buildings	85.98
213330	1101522020 - 5424000	Parks Department - Maint & Repairs Buildings	7 48
213350	1101522020 - 5424000	Parks Department - Maint & Repairs Buildings	17 47
213351	1101522020 - 5424000	Parks Department - Maint & Repairs Buildings	4 30
213356	1101522020 - 5424000	Parks Department - Maint & Repairs Buildings	17 97
213373	1101522020 - 5424000	Parks Department - Maint & Repairs Buildings	12 56
213389	1101522020 - 5424000	Parks Department - Maint & Repairs Buildings	7 50
213390	1101522020 - 5424000	Parks Department - Maint & Repairs Buildings	10 79
213394	1101522020 - 5424000	Parks Department - Maint & Repairs Buildings	6 28
213395	1101522020 - 5424000	Parks Department - Maint & Repairs Buildings	106 82
213407	1101522020 - 5424000	Parks Department - Maint & Repairs Buildings	549 63
213426	1101522020 - 5424000	Parks Department - Maint & Repairs Buildings	14 99
213427	1101522020 - 5424000	Parks Department - Maint & Repairs Buildings	22 34
213434	1101522020 - 5424000	Parks Department - Maint & Repairs Buildings	28 97
213436	1101522020 - 5424000	Parks Department - Maint & Repairs Buildings	35 73
213437	1101522020 - 5424000	Parks Department - Maint & Repairs Buildings	59 81
		Warrant Total:	**616.64**
Warrant #: VW 00359082	**Payee Name: TAYLOR, ANGELA M**		
12CR1044 080312	1101121000 - 5431230	Justice Administration - Court Apptd Atty Dist Courts	341 25
12CR1498 070312	1101121000 - 5431230	Justice Administration - Court Apptd Atty Dist Courts	162 50
		Warrant Total:	**503.75**
Warrant #: VW 00359083	**Payee Name: TECHNIQUE DATA SYSTEMS**		
2012310	1101151500 - 5481000	Tax Assessor Collector - Contract Service	800 00
		Warrant Total:	**800.00**
Warrant #: VW 00359084	**Payee Name: TEXAS ASSOCIATION FOR COURT**		
36TH TACA CONF	1101121000 - 5431230	Justice Administration - Court Apptd Atty Dist Courts	250 00

Galveston County, Texas

List of County Auditor's Approved Claims For Voucher Warrants Dated 08/21/2012

Invoice Number	Account Info		Amour
		Warrant Total:	**250.0**
Warrant #: VW 00359085	**Payee Name: TEXAS ASSOCIATION OF COUNTY AUDITORS**		
10/9-12/12	1101151300 - 5495100	County Auditor - Education	590 0
		Warrant Total:	**590.0**
Warrant #: VW 00359087	**Payee Name: TEXAS JUVENILE JUSTICE DEPARTMENT**		
JV LAW BOOKS	1101127100 - 5317000	District Attorney - Books & Periodicals	545 00
		Warrant Total:	**545.00**
Warrant #: VW 00359088	**Payee Name: TEXAS LAW & PSYCHIATRY PLLC**		
12CR0569 081012	1101121000 - 5412115	Justice Administration - Psychological Exam	2,000 00
		Warrant Total:	**2,000.00**
Warrant #: VW 00359090	**Payee Name: THOMA, JOHN**		
03CR1065 080812	1101121000 - 5431000	Justice Administration - Trial Expense	18 40
03CR1065 080812	1101121000 - 5431230	Justice Administration - Court Apptd Atty Dist Courts	885 00
11CR3664 080612	1101121000 - 5431230	Justice Administration - Court Apptd Atty Dist Courts	635 00
		Warrant Total:	**1,538.40**
Warrant #: VW 00359091	**Payee Name: THOMAS, JOSEPH J**		
CANCELLATION	1101000050 - 4471011	Culture and Recreation - User Fees - Carbide Park	125 00
		Warrant Total:	**125.00**
Warrant #: VW 00359092	**Payee Name: TORRES, MELISSA**		
CANCELLATION	1101000050 - 4471011	Culture and Recreation - User Fees - Carbide Park	620 00
		Warrant Total:	**620.00**
Warrant #: VW 00359093	**Payee Name: TORRES, ROBERTO**		
07FD2734 073012	1101121000 - 5431230	Justice Administration - Court Apptd Atty Dist Courts	216 66
11CR2881 081412	1101121000 - 5431230	Justice Administration - Court Apptd Atty Dist Courts	65 00
97FD1370 080612	1101121000 - 5431230	Justice Administration - Court Apptd Atty Dist Courts	151 66
		Warrant Total:	**433.32**
Warrant #: VW 00359094	**Payee Name: TORRES, ROBERTO**		
10CR0942 080812	1101121000 - 5431230	Justice Administration - Court Apptd Atty Dist Courts	162 50
320899 080912	1101122200 - 5431222	County Court #2 - Roberts - Defense Atty Co Ct #2	536 25
		Warrant Total:	**698.75**
Warrant #: VW 00359095	**Payee Name: TOWNSEND, MICHELLE RUTH**		
11CR50370 081712	1101121000 - 5431230	Justice Administration - Court Apptd Atty Dist Courts	195 00
		Warrant Total:	**195.00**
Warrant #: VW 00359096	**Payee Name: TRAVIS COUNTY**		
12001409	1101122300 - 5432212	Probate Court - Sullivan - Cost Bill Commitment	399 00
12001510	1101122300 - 5432212	Probate Court - Sullivan - Cost Bill Commitment	399 00
		Warrant Total:	**798.00**
Warrant #: VW 00359097	**Payee Name: TRAVIS COUNTY**		
11001763	1101122300 - 5432212	Probate Court - Sullivan - Cost Bill Commitment	374 00
12000975	1101122300 - 5432212	Probate Court - Sullivan - Cost Bill Commitment	374 00
12001613	1101122300 - 5432212	Probate Court - Sullivan - Cost Bill Commitment	399 00

Galveston County, Texas

List of County Auditor's Approved Claims For Voucher Warrants Dated 08/21/2012

Invoice Number	Account Info		Amour
12001737	1101122300 - 5432212	Probate Court - Sullivan - Cost Bill Commitment	374 0
12001828	1101122300 - 5432212	Probate Court - Sullivan - Cost Bill Commitment	399 0
12001897	1101122300 - 5432212	Probate Court - Sullivan - Cost Bill Commitment	374 0
12001901	1101122300 - 5432212	Probate Court - Sullivan - Cost Bill Commitment	399 0
		Warrant Total:	**2,693.0**
Warrant #: VW 00359098	**Payee Name: TREVINO, ISMAEL**		
11CR1438 071312	1101121000 - 5431230	Justice Administration - Court Apptd Atty Dist Courts	1,950 00
11CR3243 080312	1101121000 - 5431230	Justice Administration - Court Apptd Atty Dist Courts	455 00
		Warrant Total:	**2,405.00**
Warrant #: VW 00359100	**Payee Name: TURMAN AND ASSOCIATES INC.**		
11CR3389 073012	1101121000 - 5416000	Justice Administration - Prof Serv Investigators	749 75
		Warrant Total:	**749.75**
Warrant #: VW 00359101	**Payee Name: UNGER & HERSHKOWITZ**		
12CR0408 072712	1101121000 - 5431230	Justice Administration - Court Apptd Atty Dist Courts	195 00
		Warrant Total:	**195.00**
Warrant #: VW 00359102	**Payee Name: UNITED STATES POSTAL SERVICE**		
BR5001 2012-2013	1101159100 - 5311140	Information Technology - Postage	1,000 00
		Warrant Total:	**1,000.00**
Warrant #: VW 00359103	**Payee Name: USA MOBILITY WIRELESS INC**		
V7977749H	1101159100 - 5492321	Information Technology - Pager Service	174.11
		Warrant Total:	**174.11**
Warrant #: VW 00359107	**Payee Name: UTMB**		
708X24012120	1101121000 - 5412115	Justice Administration - Psychological Exam	800 00
708X24012121	1101121000 - 5412115	Justice Administration - Psychological Exam	500 00
		Warrant Total:	**1,300.00**
Warrant #: VW 00359108	**Payee Name: VALLEY SERVICES INC**		
IVC167251	1101451110 - 5503021	Senior Citizens - Food Cost Title III Supplemt	4,102.80
IVC167252	1101451110 - 5503021	Senior Citizens - Food Cost Title III Supplemt	4,979 04
IVC167504	1101451110 - 5503021	Senior Citizens - Food Cost Title III Supplemt	2,985 84
IVC167505	1101451110 - 5503021	Senior Citizens - Food Cost Title III Supplemt	915 12
IVC167692	1101451110 - 5503021	Senior Citizens - Food Cost Title III Supplemt	5,597 28
IVC167693	1101451110 - 5503021	Senior Citizens - Food Cost Title III Supplemt	4,969 20
IVC168002	1101451110 - 5503021	Senior Citizens - Food Cost Title III Supplemt	3,556.80
IVC168003	1101451110 - 5503021	Senior Citizens - Food Cost Title III Supplemt	5,362 80
IVC168306	1101451110 - 5503021	Senior Citizens - Food Cost Title III Supplemt	1,372 80
		Warrant Total:	**33,841.68**
Warrant #: VW 00359110	**Payee Name: VOICE4NET.COM**		
3299B	1101159100 - 5481000	Information Technology - Contract Service	50 00
		Warrant Total:	**50.00**
Warrant #: VW 00359112	**Payee Name: WALMART**		
01823	1101451110 - 5310000	Senior Citizens - Supplies and Materials	52.76
07731	1101451110 - 5310000	Senior Citizens - Supplies and Materials	6 97
09265	1101451110 - 5310000	Senior Citizens - Supplies and Materials	199 63

Galveston County, Texas

List of County Auditor's Approved Claims For Voucher Warrants Dated 08/21/2012

Invoice Number	Account Info		Amount
09364	1101451110 - 5310000	Senior Citizens - Supplies and Materials	203 36
09921	1101451110 - 5310000	Senior Citizens - Supplies and Materials	209 76
		Warrant Total:	**672.48**
Warrant #: VW 00359113		**Payee Name: WEST PUBLISHING CORPORATION**	
825349487	1101211101 - 5310000	Administration Sheriff Dept - Supplies and Materials	221 04
		Warrant Total:	**221.04**
Warrant #: VW 00359114		**Payee Name: WEST, MERLYN**	
CANCELLATION	1101000050 - 4471025	Culture and Recreation - User Fees-JBrks Prk Arena	60 00
		Warrant Total:	**60.00**
Warrant #: VW 00359115		**Payee Name: WILBARGER COUNTY**	
MED-0937	1101121000 - 5431504	Justice Administration - Medication Hearing	685 00
		Warrant Total:	**685.00**
Warrant #: VW 00359116		**Payee Name: WILLIAMS, MELISSA**	
JUL 2012 MLG	1101126100 - 5496301	District Clerk - Auto Mileage	176.00
		Warrant Total:	**176.00**
Warrant #: VW 00359117		**Payee Name: WRIGHT, ANDREW A**	
323345 081312	1101122200 - 5310000	County Court #2 - Roberts - Supplies and Materials	0 44
323345 081312	1101122200 - 5431222	County Court #2 - Roberts - Defense Atty Co Ct #2	312 00
		Warrant Total:	**312.44**
Warrant #: VW 00359118		**Payee Name: XEROX CORPORATION**	
COG2001G2	1101159100 - 5426100	Information Technology - Equipment Rental/Lease	62,023 79
		Warrant Total:	**62,023.79**
Warrant #: VW 00359119		**Payee Name: YARBROUGH, JANIS L**	
FMLY LAW 081612	1101121000 - 5495100	Justice Administration - Education	929 02
		Warrant Total:	**929.02**
Warrant #: VW 00359120		**Payee Name: ZEIGLER, JOSEPH & MARY**	
861727	1101000010 - 4414012	General Government - County Clerk Refund of Fees	6 00
		Warrant Total:	**6.00**
Warrant #: VW 00359121		**Payee Name: ZENDEH DEL AND ASSOCIATES PLLC**	
305498 081412	1101122200 - 5431222	County Court #2 - Roberts - Defense Atty Co Ct #2	400 00
		Warrant Total:	**400.00**
		FUND 1101 TOTAL:	**1,012,729.63**

FUND: 2131 DA Seized Funds Afte Aft 10/89

Warrant #: VW 00358990		**Payee Name: LINDBLADE, ALLISON**	
8/3-6/12 TRVL	2131127132 - 5495112	DA Seized Funds Afte Aft 10/89 - Training	38 00
		Warrant Total:	**38.00**
Warrant #: VW 00359028		**Payee Name: OGDEN, KELLY**	
AUG 14 2012	2131127132 - 5495112	DA Seized Funds Afte Aft 10/89 - Training	50 00

Galveston County, Texas

List of County Auditor's Approved Claims For Voucher Warrants Dated 08/21/2012

Invoice Number	Account Info		Amoun
		Warrant Total:	**50.0**
Warrant #: VW 00359071	**Payee Name: STATE BAR OF TEXAS**		
MCLE ACCRED	2131127132 - 5495112	DA Seized Funds Afte Aft 10/89 - Training	295 00
		Warrant Total:	**295.00**
		FUND 2131 TOTAL:	**383.00**

FUND: 2205 Courthouse Security Fund

Warrant #: VW 00358914	**Payee Name: G & K SERVICES**		
1030137242	2205295100 - 5312101	Courthouse Security - Uniform Expense	18 75
1030143094	2205295100 - 5312101	Courthouse Security - Uniform Expense	18 75
		Warrant Total:	**37.50**
		FUND 2205 TOTAL:	**37.50**

FUND: 2211 Law Library

Warrant #: VW 00358973	**Payee Name: KNOWLES LAW BOOK PUBLISHING INC**		
1521779	2211129100 - 5317000	Law Library - Books & Periodicals	90 60
		Warrant Total:	**90.60**
Warrant #: VW 00359046	**Payee Name: REED ELSEVIER INC**		
1207091406	2211129100 - 5317000	Law Library - Books & Periodicals	460 00
		Warrant Total:	**460.00**
		FUND 2211 TOTAL:	**550.60**

FUND: 2212 Mediation Services Prog Fund

Warrant #: VW 00358836	**Payee Name: AMERSON, RODGER DAN**		
11FD2422	2212125300 - 5432011	Mediation Services - Mediation Services	125 00
12CP0053 080112	2212125300 - 5432011	Mediation Services - Mediation Services	500 00
12CP0057 081312	2212125300 - 5432011	Mediation Services - Mediation Services	125 00
		Warrant Total:	**750.00**
Warrant #: VW 00358847	**Payee Name: BERARDINELLI CORREIA, SHAUNA L**		
99FD0467 081312	2212125300 - 5432011	Mediation Services - Mediation Services	231 25
		Warrant Total:	**231.25**
Warrant #: VW 00358971	**Payee Name: KILGORE, JEFFREY A**		
12CP0052 073012	2212125300 - 5432011	Mediation Services - Mediation Services	375 00
12CP0054 081312	2212125300 - 5432011	Mediation Services - Mediation Services	500 00
		Warrant Total:	**875.00**
Warrant #: VW 00359111	**Payee Name: WALKER, MARGARET W.**		
12CP0055 080112	2212125300 - 5432011	Mediation Services - Mediation Services	437 50
		Warrant Total:	**437.50**

Galveston County, Texas

List of County Auditor's Approved Claims For Voucher Warrants Dated 08/21/2012

Invoice Number	Account Info		Amour
		FUND 2212 TOTAL:	**2,293.7:**

FUND: 2220 Adult Probation Fund

Warrant #: VW 00358830	**Payee Name: ALERE TOXICOLOGY SERVICES INC.**		
810850	2220255100 - 5481000	Adult Probation - Contract Service	1,762 00
		Warrant Total:	**1,762.00**
Warrant #: VW 00358842	**Payee Name: BAY AREA RECOVERY CENTER**		
10827	2220255100 - 5481000	Adult Probation - Contract Service	688.00
		Warrant Total:	**688.00**
Warrant #: VW 00358877	**Payee Name: COLE PH.D., COLLIER M**		
JULY 2012	2220255100 - 5481000	Adult Probation - Contract Service	800 00
		Warrant Total:	**800.00**
Warrant #: VW 00358882	**Payee Name: CORRECTIONS SOFTWARE CORPORATION**		
25983	2220255100 - 5419301	Adult Probation - Computer Services	4,378 00
		Warrant Total:	**4,378.00**
Warrant #: VW 00358957	**Payee Name: J2 LABORATORIES INC.**		
50971	2220255100 - 5481000	Adult Probation - Contract Service	992 00
		Warrant Total:	**992.00**
Warrant #: VW 00358967	**Payee Name: JP MORGAN CHASE**		
AUGUST 2012 STMT	2220000000 - 1801183	Adult Probation Fund - P Card #6479	1,346 91
AUGUST 2012 STMT	2220000000 - 1801184	Adult Probation Fund - P Card #6438	1,063 91
		Warrant Total:	**2,410.82**
Warrant #: VW 00359033	**Payee Name: PATHWAY TO RECOVERY INC**		
JULY 2012	2220255100 - 5481000	Adult Probation - Contract Service	154 00
		Warrant Total:	**154.00**
		FUND 2220 TOTAL:	**11,184.82**

FUND: 2230 Juvenile Justice Fund

Warrant #: VW 00358895	**Payee Name: DUNAWAY, LORI**		
JULY 2012	2230256100 - 5436107	Juvenile Justice - Outpatient Counseling	90 00
		Warrant Total:	**90.00**
Warrant #: VW 00358904	**Payee Name: FAMILY SERVICE CENTER OF GALV CNTY**		
JULY 2012 OFFEND	2230256100 - 5436107	Juvenile Justice - Outpatient Counseling	9,916 00
JULY 2012COUNSEL	2230256100 - 5436107	Juvenile Justice - Outpatient Counseling	7,159 90
		Warrant Total:	**17,075.90**
Warrant #: VW 00358953	**Payee Name: INTERVENTION RESOURCES**		
JULY 2012	2230256100 - 5412114	Juvenile Justice - Psychological Evaluations/Cert	1,400 00
		Warrant Total:	**1,400.00**

Galveston County, Texas

List of County Auditor's Approved Claims For Voucher Warrants Dated 08/21/2012

Invoice Number	Account Info		Amou
Warrant #: VW 00358967	**Payee Name: JP MORGAN CHASE**		
AUGUST 2012 STMT	2230000000 - 1801040	Juvenile Justice Fund - P Crd #8253	315 0
		Warrant Total:	**315.0**
Warrant #: VW 00359106	**Payee Name: UTMB**		
23 07312012	2230256118 - 5481000	Detention - Contract Service	16,500 09
		Warrant Total:	**16,500.09**
		FUND 2230 TOTAL:	**35,381.00**

FUND: 2240 Sheriff's Commissary Fund

Warrant #: VW 00358967	**Payee Name: JP MORGAN CHASE**		
AUGUST 2012 STMT	2240000000 - 1801114	Sheriff Commissary Fund - P Card #0419	2,994 69
AUGUST 2012 STMT	2240000000 - 1801175	Sheriff Commissary Fund - P Card #0065	19,483 72
		Warrant Total:	**22,478.41**
		FUND 2240 TOTAL:	**22,478.41**

FUND: 2242 Sheriff's Seizure Aft 10/89

Warrant #: VW 00358989	**Payee Name: LIGGIOS TIRE AND SERVICE CENTER INC**		
185490	2242211124 - 5423000	Sheriff's Seizure Aft 10/89 - Maint/Repairs Equipment	3,256 30
		Warrant Total:	**3,256.30**
		FUND 2242 TOTAL:	**3,256.30**

FUND: 2250 Law Enforcement Education Fund

Warrant #: VW 00358967	**Payee Name: JP MORGAN CHASE**		
AUGUST 2012 STMT	2250000000 - 1801205	Law Enforcement Education Fund - P Card #4749	840 13
		Warrant Total:	**840.13**
		FUND 2250 TOTAL:	**840.13**

FUND: 2260 Emergency Management Fund

Warrant #: VW 00358937	**Payee Name: HALFF ASSOCIATES**		
H162068	2260292010 - 5451700	Disaster Recovery - Disaster Recovery Expenses	17,767 67
H162900	2260292010 - 5451700	Disaster Recovery - Disaster Recovery Expenses	15,100.00
H163799	2260292010 - 5451700	Disaster Recovery - Disaster Recovery Expenses	2,235 31
		Warrant Total:	**35,102.98**
		FUND 2260 TOTAL:	**35,102.98**

FUND: 2301 Road & Bridge Fund

Warrant #: VW 00000465 **Payee Name: KEYWORTHS HARDWARE INC**

Galveston County, Texas

List of County Auditor's Approved Claims For Voucher Warrants Dated 08/21/2012

Invoice Number	Account Info		Amount
000150765	2301312120 - 5310000	FM & Lateral Road - Supplies and Materials	16 29
000151230	2301312120 - 5310000	FM & Lateral Road - Supplies and Materials	4 60
		Warrant Total:	**20.89**
Warrant #: VW 00358833	**Payee Name: ALLIGARE LLC**		
19182	2301312120 - 5310000	FM & Lateral Road - Supplies and Materials	1,556 20
19252	2301312120 - 5310000	FM & Lateral Road - Supplies and Materials	101 00
		Warrant Total:	**1,657.20**
Warrant #: VW 00358834	**Payee Name: ALWAYS SAFETY AND 1ST AID INC**		
29700	2301312120 - 5310000	FM & Lateral Road - Supplies and Materials	49 95
		Warrant Total:	**49.95**
Warrant #: VW 00358844	**Payee Name: BAY OIL CO CORP**		
205456	2301312120 - 5322010	FM & Lateral Road - Auto Fuel Expense	8,141 57
205457	2301312120 - 5322010	FM & Lateral Road - Auto Fuel Expense	8,325 69
		Warrant Total:	**16,467.26**
Warrant #: VW 00358868	**Payee Name: CHERRY CRUSHED CONCRETE**		
1020778	2301312120 - 5353014	FM & Lateral Road - Materials Flexible Base	3,604 36
		Warrant Total:	**3,604.36**
Warrant #: VW 00358873	**Payee Name: CLEVELAND ASPHALT PRODUCTS INC**		
11161	2301312120 - 5353011	FM & Lateral Road - Road Oils & Emulsions	10,634 32
C17676	2301312120 - 5353011	FM & Lateral Road - Road Oils & Emulsions	-1,516 65
		Warrant Total:	**9,117.67**
Warrant #: VW 00358883	**Payee Name: CROP PRODUCTION SERVICES**		
208714	2301312120 - 5310000	FM & Lateral Road - Supplies and Materials	333 00
		Warrant Total:	**333.00**
Warrant #: VW 00358914	**Payee Name: G & K SERVICES**		
1030141990	2301312120 - 5312101	FM & Lateral Road - Uniform Expense	69 36
		Warrant Total:	**69.36**
Warrant #: VW 00358967	**Payee Name: JP MORGAN CHASE**		
AUGUST 2012 STMT	2301000000 - 1802002	Road and Bridge Fund - P Crd #9522	7,438 06
AUGUST 2012 STMT	2301000000 - 1802004	Road and Bridge Fund - P Crd #7301	453 07
		Warrant Total:	**7,891.13**
Warrant #: VW 00358989	**Payee Name: LIGGIOS TIRE AND SERVICE CENTER INC**		
186035	2301312120 - 5423000	FM & Lateral Road - Maint/Repairs Equipment	39 75
		Warrant Total:	**39.75**
Warrant #: VW 00358997	**Payee Name: MAINLAND TOOL AND SUPPLY INC**		
40983401	2301312120 - 5310000	FM & Lateral Road - Supplies and Materials	389 90
		Warrant Total:	**389.90**
Warrant #: VW 00359007	**Payee Name: MCREE FORD INC**		
369425	2301312120 - 5423000	FM & Lateral Road - Maint/Repairs Equipment	7 96
		Warrant Total:	**7.96**

Galveston County, Texas

List of County Auditor's Approved Claims For Voucher Warrants Dated 08/21/2012

Invoice Number	Account Info		Amoun
Warrant #: VW 00359026	**Payee Name: NORTHERN TOOL EQUIPMENT COMPANY**		
26562023	2301312120 - 5310001	FM & Lateral Road - Depart Supplies-Non Cap FFE	493 01
26588725	2301312120 - 5310001	FM & Lateral Road - Depart Supplies-Non Cap FFE	605 00
		Warrant Total:	**1,098.01**
Warrant #: VW 00359043	**Payee Name: R B EVERETT & CO**		
S145387	2301312120 - 5423000	FM & Lateral Road - Maint/Repairs Equipment	779 85
		Warrant Total:	**779.85**
Warrant #: VW 00359053	**Payee Name: SANTA FE AUTO PARTS INC**		
95386	2301312120 - 5423000	FM & Lateral Road - Maint/Repairs Equipment	44 99
95418	2301312120 - 5423000	FM & Lateral Road - Maint/Repairs Equipment	282 80
		Warrant Total:	**327.79**
Warrant #: VW 00359068	**Payee Name: SOUTHWEST T & I INC**		
1999254	2301312110 - 5481000	Administration - Contract Service	304 50
		Warrant Total:	**304.50**
		FUND 2301 TOTAL:	**42,158.58**

FUND: 2303 Farm to Market Lateral Road

Warrant #: VW 00358968	**Payee Name: KAHLA, JOE GLENN**		
FRNCH TWR BRDGE	2303314300 - 5713010	Real Estate Services - ROW Acquistion	20,000 00
		Warrant Total:	**20,000.00**
		FUND 2303 TOTAL:	**20,000.00**

FUND: 2370 Flood Control Fund

Warrant #: VW 00358856	**Payee Name: BROOKSIDE EQUIP SALES INC**		
IL36015	2370296121 - 5423000	Seawall Maintenance - Maint/Repairs Equipment	172 86
		Warrant Total:	**172.86**
Warrant #: VW 00358991	**Payee Name: LJA ENGINEERING & SURVEYING INC**		
20123627	2370296121 - 5700000	Seawall Maintenance - Capital Outlay	1,150 00
		Warrant Total:	**1,150.00**
Warrant #: VW 00359053	**Payee Name: SANTA FE AUTO PARTS INC**		
99030	2370296121 - 5423000	Seawall Maintenance - Maint/Repairs Equipment	346 84
		Warrant Total:	**346.84**
Warrant #: VW 00359086	**Payee Name: TEXAS CITY FEED AND SUPPLY**		
027503	2370296121 - 5310000	Seawall Maintenance - Supplies and Materials	83 96
		Warrant Total:	**83.96**
		FUND 2370 TOTAL:	**1,753.66**

FUND: 2410 Mosquito Control District Fund

Galveston County, Texas

List of County Auditor's Approved Claims For Voucher Warrants Dated 08/21/2012

Invoice Number	Account Info		Amour
Warrant #: VW 00000465	**Payee Name: KEYWORTHS HARDWARE INC**		
000151551	2410411100 - 5424000	Mosquito Control District - Maint & Repairs Buildings	21 8
		Warrant Total:	**21.8**
Warrant #: VW 00358870	**Payee Name: CITY OF GALVESTON**		
AR11200066	2410411100 - 5426251	Mosquito Control District - Rental Storage Facility	360 29
		Warrant Total:	**360.29**
Warrant #: VW 00358945	**Payee Name: HOME DEPOT**		
4050617	2410411100 - 5424000	Mosquito Control District - Maint & Repairs Buildings	58 16
9030023	2410411100 - 5424000	Mosquito Control District - Maint & Repairs Buildings	69 62
		Warrant Total:	**127.78**
Warrant #: VW 00358967	**Payee Name: JP MORGAN CHASE**		
AUGUST 2012 STMT	2410000000 - 1803007	Mosquito Control District - P Card #3257	583 31
		Warrant Total:	**583.31**
Warrant #: VW 00359022	**Payee Name: NELSON, MURREL**		
5226458	2410411100 - 5310000	Mosquito Control District - Supplies and Materials	4 32
		Warrant Total:	**4.32**
Warrant #: VW 00359109	**Payee Name: VALLEY SOLVENTS AND CHEMICALS**		
403696	2410411100 - 5313301	Mosquito Control District - Insecticides	1,176 57
		Warrant Total:	**1,176.57**
		FUND 2410 TOTAL:	**2,274.13**

FUND: 2420 Indigent Health Care Fund

Warrant #: VW 00000464	**Payee Name: GALVESTON NEWSPAPERS INC**		
00306502 072612	2420440110 - 5481022	Indigent Health Care Fund - Indigent Health Care Srv	415 87
		Warrant Total:	**415.87**
Warrant #: VW 00358821	**Payee Name: A*MED MEDICAL INC**		
166892	2420440110 - 5481022	Indigent Health Care Fund - Indigent Health Care Srv	25 00
		Warrant Total:	**25.00**
Warrant #: VW 00358826	**Payee Name: ACHARYA MD PA,SID**		
JULY 2012	2420440110 - 5481022	Indigent Health Care Fund - Indigent Health Care Srv	17 64
		Warrant Total:	**17.64**
Warrant #: VW 00358838	**Payee Name: BAHEC LLC**		
JULY 2012	2420440110 - 5481022	Indigent Health Care Fund - Indigent Health Care Srv	884 52
		Warrant Total:	**884.52**
Warrant #: VW 00358840	**Payee Name: BARRIER REEF EMERGENCY PHYSICIANS**		
JULY 2012	2420440110 - 5481022	Indigent Health Care Fund - Indigent Health Care Srv	535 80
		Warrant Total:	**535.80**
Warrant #: VW 00358841	**Payee Name: BAY AREA ANESTHESIA SERVICES PA**		
JULY 2012	2420440110 - 5481022	Indigent Health Care Fund - Indigent Health Care Srv	324 93

Galveston County, Texas

List of County Auditor's Approved Claims For Voucher Warrants Dated 08/21/2012

Invoice Number	Account Info		Amoun
		Warrant Total:	**324.9.**
Warrant #: VW 00358845	**Payee Name: BEELER MANSKE CLINIC LLP**		
JULY 2012	2420440110 - 5481022	Indigent Health Care Fund - Indigent Health Care Srv	302 73
		Warrant Total:	**302.73**
Warrant #: VW 00358854	**Payee Name: BOON CHAPMAN BENEFIT ADMINISTRATORS**		
JULY 2012	2420440110 - 5481022	Indigent Health Care Fund - Indigent Health Care Srv	10,390 00
		Warrant Total:	**10,390.00**
Warrant #: VW 00358872	**Payee Name: CLEAR LAKE PATHOLOGY PARTNERS**		
JULY 2012	2420440110 - 5481022	Indigent Health Care Fund - Indigent Health Care Srv	8 82
		Warrant Total:	**8.82**
Warrant #: VW 00358874	**Payee Name: CLINICAL PATHOLOGY LABORATORIES INC**		
JULY 2012	2420440110 - 5481022	Indigent Health Care Fund - Indigent Health Care Srv	120 65
		Warrant Total:	**120.65**
Warrant #: VW 00358875	**Payee Name: COASTAL GASTROENOLOGY ASSOCIATES PA**		
JULY 2012	2420440110 - 5481022	Indigent Health Care Fund - Indigent Health Care Srv	33 27
		Warrant Total:	**33.27**
Warrant #: VW 00358880	**Payee Name: COMMUNITY PATHOLOGY ASSOCIATES**		
JULY 2012	2420440110 - 5481022	Indigent Health Care Fund - Indigent Health Care Srv	1,095 91
		Warrant Total:	**1,095.91**
Warrant #: VW 00358929	**Payee Name: GREATER HOUSTON ANESTHESIOLOGY PA**		
JULY 2012	2420440110 - 5481022	Indigent Health Care Fund - Indigent Health Care Srv	342 98
		Warrant Total:	**342.98**
Warrant #: VW 00358930	**Payee Name: GREATER HOUSTON EMERGENCY PHYSICIANS**		
JULY 2012	2420440110 - 5481022	Indigent Health Care Fund - Indigent Health Care Srv	1,691 88
		Warrant Total:	**1,691.88**
Warrant #: VW 00358932	**Payee Name: GULDE MD PA, JANIS**		
JULY 2012	2420440110 - 5481022	Indigent Health Care Fund - Indigent Health Care Srv	423 45
		Warrant Total:	**423.45**
Warrant #: VW 00358946	**Payee Name: HOUSTON PROGRESSIVE RADIOLOGY ASSO**		
JULY 2012	2420440110 - 5481022	Indigent Health Care Fund - Indigent Health Care Srv	50 26
		Warrant Total:	**50.26**
Warrant #: VW 00358952	**Payee Name: INPATIENT CONSULTANTS OF TEXAS PLLC**		
JULY 2012	2420440110 - 5481022	Indigent Health Care Fund - Indigent Health Care Srv	330 17
		Warrant Total:	**330.17**
Warrant #: VW 00358976	**Payee Name: LABORATORY CORPORATION OF AMERICA**		
JULY 2012	2420440110 - 5481022	Indigent Health Care Fund - Indigent Health Care Srv	328 84
		Warrant Total:	**328.84**
Warrant #: VW 00358987	**Payee Name: LEWIS MD, BEVERLY GUILLORY**		
JULY 2012	2420440110 - 5481022	Indigent Health Care Fund - Indigent Health Care Srv	1,264 35

Galveston County, Texas

List of County Auditor's Approved Claims For Voucher Warrants Dated 08/21/2012

Invoice Number	Account Info	Amount
	Warrant Total:	**1,264.35**
Warrant #: VW 00358995	**Payee Name: MAINLAND MULTI-SPECIALTY GROUP PLLC**	
MAY 2012	2420440110 - 5481022 Indigent Health Care Fund - Indigent Health Care Srv	1,869 12
	Warrant Total:	**1,869.12**
Warrant #: VW 00358996	**Payee Name: MAINLAND RADIOLOGICAL ASSOCIATION**	
JULY 2012	2420440110 - 5481022 Indigent Health Care Fund - Indigent Health Care Srv	274 52
	Warrant Total:	**274.52**
Warrant #: VW 00359010	**Payee Name: MEMORIAL HERMANN HOSPITAL SYSTEM**	
JULY 2012	2420440110 - 5481022 Indigent Health Care Fund - Indigent Health Care Srv	49,602 05
	Warrant Total:	**49,602.05**
Warrant #: VW 00359011	**Payee Name: MEMORIAL PATHOLOGY CONSULTANTS PA**	
JULY 2012	2420440110 - 5481022 Indigent Health Care Fund - Indigent Health Care Srv	127 24
	Warrant Total:	**127.24**
Warrant #: VW 00359012	**Payee Name: MEMORIAL PATHOLOGY CONSULTANTS PA**	
JULY 2012	2420440110 - 5481022 Indigent Health Care Fund - Indigent Health Care Srv	71 85
	Warrant Total:	**71.85**
Warrant #: VW 00359013	**Payee Name: MEMORIAL RADIOLOGY ASSOCIATES INC**	
JULY 2012	2420440110 - 5481022 Indigent Health Care Fund - Indigent Health Care Srv	201 04
	Warrant Total:	**201.04**
Warrant #: VW 00359034	**Payee Name: PATIENT'S ANESTHESIA GROUP PA, THE**	
JULY 2012	2420440110 - 5481022 Indigent Health Care Fund - Indigent Health Care Srv	848 42
	Warrant Total:	**848.42**
Warrant #: VW 00359041	**Payee Name: QUEST DIAGNOSTICS CLINICAL**	
JULY 2012	2420440110 - 5481022 Indigent Health Care Fund - Indigent Health Care Srv	607 15
	Warrant Total:	**607.15**
Warrant #: VW 00359054	**Payee Name: SCHMALSTEIG MD, ELISABETH J**	
JULY 2012	2420440110 - 5481022 Indigent Health Care Fund - Indigent Health Care Srv	117 74
	Warrant Total:	**117.74**
Warrant #: VW 00359099	**Payee Name: TSA - TEXAS SURGICAL ASSOCIATES**	
JULY 2012	2420440110 - 5481022 Indigent Health Care Fund - Indigent Health Care Srv	3,778 95
	Warrant Total:	**3,778.95**
Warrant #: VW 00359104	**Payee Name: UTMB**	
JULY 2012	2420440110 - 5481022 Indigent Health Care Fund - Indigent Health Care Srv	243 40
	Warrant Total:	**243.40**
Warrant #: VW 00359105	**Payee Name: UTMB**	
JULY 2012	2420440110 - 5481022 Indigent Health Care Fund - Indigent Health Care Srv	7,045 69
	Warrant Total:	**7,045.69**

Galveston County, Texas

List of County Auditor's Approved Claims For Voucher Warrants Dated 08/21/2012

Invoice Number	Account Info		Amount
		FUND 2420 TOTAL:	**83,374.24**

FUND: 2501 Child Welfare Fund

Warrant #: VW 00358915 **Payee Name: GALVESTON COUNTY HEALTH DISTRICT**

3178	2501443300 - 5499351	Child Welfare - Client Doc/Off Rec-Birth/Death	205 00
		Warrant Total:	**205.00**

Warrant #: VW 00359049 **Payee Name: ROSS**

19058	2501443300 - 5312100	Child Welfare - Clothing Expense	156 83
19183	2501443300 - 5312100	Child Welfare - Clothing Expense	175 00
19304	2501443300 - 5312100	Child Welfare - Clothing Expense	82 17
		Warrant Total:	**414.00**
		FUND 2501 TOTAL:	**619.00**

FUND: 2824 Adult Probation Community

Warrant #: VW 00358842 **Payee Name: BAY AREA RECOVERY CENTER**

10827	2824255110 - 5481000	Special Substance Abuse - Contract Service	556 00
		Warrant Total:	**556.00**

Warrant #: VW 00358877 **Payee Name: COLE PH.D., COLLIER M**

JULY 2012	2824255136 - 5481000	Sex Offender Supervision - Contract Service	4,495 00
		Warrant Total:	**4,495.00**

Warrant #: VW 00359029 **Payee Name: ORDAZ, WILLIAM**

JUL 2012 MLG	2824255136 - 5496301	Sex Offender Supervision - Auto Mileage	141 53
		Warrant Total:	**141.53**

Warrant #: VW 00359033 **Payee Name: PATHWAY TO RECOVERY INC**

JULY 2012	2824255110 - 5481000	Special Substance Abuse - Contract Service	440 00
		Warrant Total:	**440.00**
		FUND 2824 TOTAL:	**5,632.53**

FUND: 2841 Juvenile Probation-State Aid

Warrant #: VW 00358895 **Payee Name: DUNAWAY, LORI**

JULY 2012	2841256110 - 5436107	State Aid Grant A - Outpatient Counseling	1,320 00
		Warrant Total:	**1,320.00**

Warrant #: VW 00358934 **Payee Name: GULF COAST CENTER**

JULY 2012 COST	2841256110 - 5436107	State Aid Grant A - Outpatient Counseling	7,228.75
		Warrant Total:	**7,228.75**
		FUND 2841 TOTAL:	**8,548.75**

Galveston County, Texas

List of County Auditor's Approved Claims For Voucher Warrants Dated 08/21/2012

Invoice Number	Account Info		Amour
FUND: 2864 Auto Crimes Task Force Grant			
Warrant #: VW 00358837	**Payee Name: AT&T MOBILITY**		
2870246075050812	2864211126 - 5492100	Auto Crime Task Force - Wireless MCT Service	56 3.
		Warrant Total:	**56.3:**
Warrant #: VW 00358871	**Payee Name: CITY OF SANTA FE**		
JULY 2012RICHARD	2864211126 - 5100000	Auto Crime Task Force - Salaries	3,876 93
		Warrant Total:	**3,876.93**
Warrant #: VW 00358967	**Payee Name: JP MORGAN CHASE**		
AUGUST 2012 STMT	2864000000 - 1801058	Galv Co Auto Crimes Task Force - P Card #3523	2,192 73
AUGUST 2012 STMT	2864000000 - 1801060	Galv Co Auto Crimes Task Force - P Crd #4067	11 17
AUGUST 2012 STMT	2864000000 - 1801061	Galv Co Auto Crimes Task Force - P Crd #4034	250 00
AUGUST 2012 STMT	2864000000 - 1801102	Galv Co Auto Crimes Task Force - P Card #2403	250 00
		Warrant Total:	**2,703.90**
		FUND 2864 TOTAL:	**6,637.16**
FUND: 2914 CDBG Housing Program			
Warrant #: VW 00000463	**Payee Name: DSW HOMES LLC**		
311714	2914000000 - 2070001	CDBG Housing Program - Contract Payable Retainage	-4,294 64
311714	2914152512 - 5519010	Ownr-Occupied Reconstruction - Contractor - Construction	42,946 40
312940	2914000000 - 2070001	CDBG Housing Program - Contract Payable Retainage	-4,295 37
312940	2914152513 - 5519010	Ownr-Occupied Replacement - Contractor - Construction	42,953 70
412918	2914000000 - 2070001	CDBG Housing Program - Contract Payable Retainage	12,646 31
		Warrant Total:	**89,956.40**
Warrant #: VW 00358835	**Payee Name: AMERICAN HOMESTAR CORPORATION**		
10888	2914000000 - 2070001	CDBG Housing Program - Contract Payable Retainage	10,915 81
		Warrant Total:	**10,915.81**
Warrant #: VW 00358860	**Payee Name: BYRDSON SERVICES LLC**		
385R	2914000000 - 2070001	CDBG Housing Program - Contract Payable Retainage	799 90
		Warrant Total:	**799.90**
Warrant #: VW 00358954	**Payee Name: J W KELSO COMPANY INC**		
313809	2914000000 - 2070001	CDBG Housing Program - Contract Payable Retainage	-4,616 06
313809	2914152551 - 5519010	Rntr-Occupied Reconstruction - Contractor - Construction	46,160 61
413487	2914000000 - 2070001	CDBG Housing Program - Contract Payable Retainage	12,610 82
413682	2914000000 - 2070001	CDBG Housing Program - Contract Payable Retainage	9,631 38
413749	2914000000 - 2070001	CDBG Housing Program - Contract Payable Retainage	11,061 66
413765	2914000000 - 2070001	CDBG Housing Program - Contract Payable Retainage	10,635 12
413885	2914000000 - 2070001	CDBG Housing Program - Contract Payable Retainage	12,126 34
CO213663	2914000000 - 2070001	CDBG Housing Program - Contract Payable Retainage	-258 30
CO213663	2914152551 - 5519010	Rntr-Occupied Reconstruction - Contractor - Construction	2,583 00
		Warrant Total:	**99,934.57**
Warrant #: VW 00358955	**Payee Name: J W KELSO COMPANY INC**		
413658	2914000000 - 2070001	CDBG Housing Program - Contract Payable Retainage	17,830 47
413742	2914000000 - 2070001	CDBG Housing Program - Contract Payable Retainage	12,248 65

Galveston County, Texas

List of County Auditor's Approved Claims For Voucher Warrants Dated 08/21/2012

Invoice Number	Account Info		Amour
413890	2914000000 - 2070001	CDBG Housing Program - Contract Payable Retainage	10,933 3
		Warrant Total:	**41,012.4**

Warrant #: VW 00358960 **Payee Name: JAHN-GALVESTON INSURANCE AGENCY INC**

23626 081012	2914152551 - 5519020	Rntr-Occupied Reconstruction - Vendor - 1st Yr Ins Cst	925.0(
23638	2914152551 - 5519020	Rntr-Occupied Reconstruction - Vendor - 1st Yr Ins Cst	1,108 0(
23687 080912	2914152551 - 5519020	Rntr-Occupied Reconstruction - Vendor - 1st Yr Ins Cst	1,330 00
23697 080912	2914152551 - 5519020	Rntr-Occupied Reconstruction - Vendor - 1st Yr Ins Cst	1,141 00
23718 081412	2914152511 - 5519020	Ownr-Occupied Rehab - Vendor - 1st Yr Ins Cst	1,708 00
		Warrant Total:	**6,212.00**

Warrant #: VW 00358967 **Payee Name: JP MORGAN CHASE**

AUGUST 2012 STMT	2914000000 - 1800127	CDBG Housing Program - P Card #5212	51 14
		Warrant Total:	**51.14**

Warrant #: VW 00359077 **Payee Name: SULLIVAN LAND SERVICES LTD**

2012413	2914000000 - 2070001	CDBG Housing Program - Contract Payable Retainage	10,916 61
2012710	2914000000 - 2070001	CDBG Housing Program - Contract Payable Retainage	9,686 72
2012736	2914000000 - 2070001	CDBG Housing Program - Contract Payable Retainage	10,844 88
2012821	2914000000 - 2070001	CDBG Housing Program - Contract Payable Retainage	10,406 33
2012907	2914000000 - 2070001	CDBG Housing Program - Contract Payable Retainage	16,618 50
2012908	2914000000 - 2070001	CDBG Housing Program - Contract Payable Retainage	16,824 48
2012909	2914000000 - 2070001	CDBG Housing Program - Contract Payable Retainage	14,637 38
		Warrant Total:	**89,934.90**

FUND 2914 TOTAL: 338,817.17

FUND: 2915 CDBG Infrastructure Program

Warrant #: VW 00358985 **Payee Name: LEO A DALY COMPANY**

01	2915242100 - 5481000	Crystal Beach Fire and EMS Sta - Contract Service	31,980 65
02	2915242100 - 5481000	Crystal Beach Fire and EMS Sta - Contract Service	1,400 05
		Warrant Total:	**33,380.70**

FUND 2915 TOTAL: 33,380.70

FUND: 2921 Senior Citizens Grant Prog

Warrant #: VW 00359108 **Payee Name: VALLEY SERVICES INC**

IVC168002	2921451156 - 5448117	Title IIIC - Raw Food/Congregate	1,765.92
IVC168306	2921451156 - 5448117	Title IIIC - Raw Food/Congregate	848 64
		Warrant Total:	**2,614.56**

FUND 2921 TOTAL: 2,614.56

FUND: 2923 Texas Feeding Texans

Warrant #: VW 00359108 **Payee Name: VALLEY SERVICES INC**

IVC167504	2923451185 - 5314103	Texas Feeding Texans - Food - Supplemental	2,480.40
IVC167505	2923451185 - 5314103	Texas Feeding Texans - Food - Supplemental	4,014 72

Galveston County, Texas

List of County Auditor's Approved Claims For Voucher Warrants Dated 08/21/2012

Invoice Number	Account Info		Amoun
		Warrant Total:	**6,495.12**
		FUND 2923 TOTAL:	**6,495.12**

FUND: 2994 Disaster Recovery - Ike

Warrant #: VW 00358876 **Payee Name: COBB FENDLEY & ASSOCIATES**

237928	2994299761 - 5481000	Ft Travis Roadway/Walkway - Contract Service	3,380 20
		Warrant Total:	**3,380.20**
		FUND 2994 TOTAL:	**3,380.20**

FUND: 3100 County Capital Projects Fund

Warrant #: VW 00358898 **Payee Name: EDOCUMENT RESOURCES LLC**

503311	3100159126 - 5754095	IT Capital Projects - Imaging	6,687 95
503357	3100159126 - 5754095	IT Capital Projects - Imaging	14,062.10
503458	3100159126 - 5754095	IT Capital Projects - Imaging	886 47
		Warrant Total:	**21,636.52**

Warrant #: VW 00359080 **Payee Name: SUNGARD PUBLIC SECTOR INC**

53691	3100159126 - 5754100	IT Capital Projects - IFAS 7i Conversion	43,600 00
54026	3100159126 - 5754100	IT Capital Projects - IFAS 7i Conversion	26,194.00
		Warrant Total:	**69,794.00**
		FUND 3100 TOTAL:	**91,430.52**

FUND: 3120 Limited Tax Cnty Bldg Bds Sr09

Warrant #: VW 00358955 **Payee Name: J W KELSO COMPANY INC**

197RETA	3120000000 - 2070001	Limited Tax Cnty Bldg Bds Sr09 - Contract Payable Retaina	6,020 10
197RETC	3120000000 - 2070001	Limited Tax Cnty Bldg Bds Sr09 - Contract Payable Retaina	1,000 00
197RETD	3120000000 - 2070001	Limited Tax Cnty Bldg Bds Sr09 - Contract Payable Retaina	6,030 85
3B ARC 080812	3120000000 - 2070001	Limited Tax Cnty Bldg Bds Sr09 - Contract Payable Retaina	-46 65
3B ARC 080812	3120179331 - 5722000	Animal Resource Center - Construction Bldg Capital Outl	933 00
		Warrant Total:	**13,937.30**

Warrant #: VW 00358962 **Payee Name: JOHN A WALKER ROOFING CO INC**

051207	3120000000 - 2070001	Limited Tax Cnty Bldg Bds Sr09 - Contract Payable Retaina	-62 63
051207	3120179331 - 5722000	Animal Resource Center - Construction Bldg Capital Outl	1,252 63
		Warrant Total:	**1,190.00**

Warrant #: VW 00359016 **Payee Name: MITCHELL CHUOKE PLUMBING CO**

12 081512 ARC	3120000000 - 2070001	Limited Tax Cnty Bldg Bds Sr09 - Contract Payable Retaina	-566 69
12 081512 ARC	3120179331 - 5722000	Animal Resource Center - Construction Bldg Capital Outl	11,333 82
		Warrant Total:	**10,767.13**

Warrant #: VW 00359040 **Payee Name: PROFESSIONAL CERAMIC TILE INC**

5650	3120179331 - 5722000	Animal Resource Center - Construction Bldg Capital Outl	7,450 00

Galveston County, Texas

List of County Auditor's Approved Claims For Voucher Warrants Dated 08/21/2012

Invoice Number	Account Info		Amoun
		Warrant Total:	**7,450.0**
		FUND 3120 TOTAL:	**33,344.43**

FUND: 3271 Parks Dept Capital Projects

Warrant #: VW 00358938 **Payee Name: HALFF ASSOCIATES**

PROJECT 28748	3271529215 - 5737816	Spillway Park Project - Spillway Park Project	27,286 59
		Warrant Total:	**27,286.59**
		FUND 3271 TOTAL:	**27,286.59**

FUND: 3310 Pass Thru Toll Rv Lt Tx BdSr07

Warrant #: VW 00000466 **Payee Name: TRIPLE B SERVICES LLP**

097801024 051710	3310315162 - 5731015	Pass Thru Toll Rv LtTxBdSr07 - 646 Pass Thru Toll Rd Proj	762,829 29
		Warrant Total:	**762,829.29**

Warrant #: VW 00358843 **Payee Name: BAY COLONY COMMUNITY IMPROVEMENT**

LTTXBDSR07	3310315162 - 5731015	Pass Thru Toll Rv LtTxBdSr07 - 646 Pass Thru Toll Rd Proj	8,365 56
		Warrant Total:	**8,365.56**
		FUND 3310 TOTAL:	**771,194.85**

FUND: 3312 Unltd Tax Road Bonds Sr 2009

Warrant #: VW 00358850 **Payee Name: BINKLEY & BARFIELD INC**

17670	3312312111 - 5731133	Non-County Roads - Stewart Rd-Cove View to 7mi	11,695 43
17672	3312312111 - 5731119	Non-County Roads - FM 646-SH3/FM1764	107,497 59
		Warrant Total:	**119,193.02**

Warrant #: VW 00358936 **Payee Name: HALFF ASSOCIATES**

H164738	3312312111 - 5731132	Non-County Roads - Stewart Rd-75th to Cove View	17,702 65
		Warrant Total:	**17,702.65**

Warrant #: VW 00358948 **Payee Name: HUBCO INC**

6 072512	3312000000 - 2070001	Unltd Tax Road Bonds Sr 2009 - Contract Payable Retainage	-2,806 36
6 072512	3312312111 - 5731162	Non-County Roads - City Streets - Kemah	56,127 16
		Warrant Total:	**53,320.80**

Warrant #: VW 00359014 **Payee Name: METRO CITY CONSTRUCTION LP**

2428 FINAL	3312000000 - 2070001	Unltd Tax Road Bonds Sr 2009 - Contract Payable Retainage	82,976 36
		Warrant Total:	**82,976.36**

Warrant #: VW 00359045 **Payee Name: R W LUCAS CONSTRUCTION LLC**

5 073112	3312000000 - 2070001	Unltd Tax Road Bonds Sr 2009 - Contract Payable Retainage	-15,999 37
5 073112	3312312111 - 5731132	Non-County Roads - Stewart Rd-75th to Cove View	319,987 32
		Warrant Total:	**303,987.95**

Galveston County, Texas

List of County Auditor's Approved Claims For Voucher Warrants Dated 08/21/2012

Invoice Number	Account Info		Amou
		FUND 3312 TOTAL:	**577,180.7**

FUND: 3315 Galv Causeway RR Bridge Proj

Warrant #: VW 00358851 **Payee Name: BNSF RAILWAY COMPANY**

90058551	3315313200 - 5732024	Causeway Railroad Bridge Prj - BNSF Force Account - RR Br	1,602 41
		Warrant Total:	**1,602.41**

Warrant #: VW 00358931 **Payee Name: GREENMAN PEDERSEN INC**

0160932	3315313200 - 5722903	Causeway Railroad Bridge Prj - Owners Contingency	4,275 00
		Warrant Total:	**4,275.00**

Warrant #: VW 00359017 **Payee Name: MODJESKI AND MASTERS INC**

215574	3315313200 - 5722903	Causeway Railroad Bridge Prj - Owners Contingency	40,000 00
		Warrant Total:	**40,000.00**
		FUND 3315 TOTAL:	**45,877.41**

FUND: 6123 Group,Wrks'Comp,Unemplmnt Ins

Warrant #: VW 00358862 **Payee Name: CAREHERE LLC**

8202	6123155021 - 5417208	Group Insurance - CareHere Supplemental Fee	16,864 01
		Warrant Total:	**16,864.01**

Warrant #: VW 00358863 **Payee Name: CAREHERE LLC**

8059	6123155021 - 5417208	Group Insurance - CareHere Supplemental Fee	26,014 95
		Warrant Total:	**26,014.95**

Warrant #: VW 00358986 **Payee Name: LEOPOLD, WILLIAM E**

ARI1200065	6123155021 - 5481000	Group Insurance - Contract Service	2,975 00
		Warrant Total:	**2,975.00**

Warrant #: VW 00359069 **Payee Name: STANDARD INSURANCE CO**

JULY 2012	6123155021 - 5491737	Group Insurance - Life Insurance Premiums	5,075 00
JUNE 2012	6123155021 - 5491737	Group Insurance - Life Insurance Premiums	5,075 00
MAY 2012	6123155021 - 5491737	Group Insurance - Life Insurance Premiums	5,075 00
		Warrant Total:	**15,225.00**
		FUND 6123 TOTAL:	**61,078.96**

FUND: 7605 Escrow Fund

Warrant #: VW 00359038 **Payee Name: POOR, SHERIFF FREDDIE**

SHRF SL 060512	7605000000 - 2495896	Escrow Fund - TX SL 06TX1064	675 00
SHRF SL 060512	7605000000 - 2495897	Escrow Fund - TX SL 07TX0844	675 00
SHRF SL 060512	7605000000 - 2495898	Escrow Fund - TX SL 09TX0271	675 00
SHRF SL 060512	7605000000 - 2495899	Escrow Fund - TX SL 09TX0607	675 00
SHRF SL 060512	7605000000 - 2495900	Escrow Fund - Delinq Tax Sale Various Causes	675.00
		Warrant Total:	**3,375.00**

Galveston County, Texas

List of County Auditor's Approved Claims For Voucher Warrants Dated 08/21/2012

Invoice Number	Account Info	Amount
Warrant #: VW 00359089	**Payee Name: TEXAS PARKS AND WILDLIFE DEPT**	
JUL 12 JP1 FEES	7605000000 - 2476007 Escrow Fund - Tx Parks & Wildlife Fines 85%	2,276 51
	Warrant Total:	**2,276.51**
	FUND 7605 TOTAL:	**5,651.51**

Galveston County, Texas

List of County Auditor's Approved Claims For Voucher Warrants Dated 08/21/2012

Summary of All Funds

Fund		Amount
1101	General Fund	1,012,729 63
2131	DA Seized Funds Afte Aft 10/89	383 00
2205	Courthouse Security Fund	37 50
2211	Law Library	550 60
2212	Mediation Services Prog Fund	2,293 75
2220	Adult Probation Fund	11,184 82
2230	Juvenile Justice Fund	35,381 00
2240	Sheriff's Commissary Fund	22,478 41
2242	Sheriff's Seizure Aft 10/89	3,256.30
2250	Law Enforcement Education Fund	840 13
2260	Emergency Management Fund	35,102 98
2301	Road & Bridge Fund	42,158 58
2303	Farm to Market Lateral Road	20,000 00
2370	Flood Control Fund	1,753 66
2410	Mosquito Control District Fund	2,274 13
2420	Indigent Health Care Fund	83,374 24
2501	Child Welfare Fund	619 00
2824	Adult Probation Community	5,632.53
2841	Juvenile Probation-State Aid	8,548 75
2864	Auto Crimes Task Force Grant	6,637 16
2914	CDBG Housing Program	338,817 17
2915	CDBG Infrastructure Program	33,380 70
2921	Senior Citizens Grant Prog	2,614 56
2923	Texas Feeding Texans	6,495 12
2994	Disaster Recovery - Ike	3,380 20
3100	County Capital Projects Fund	91,430 52
3120	Limited Tax Cnty Bldg Bds Sr09	33,344 43
3271	Parks Dept Capital Projects	27,286 59
3310	Pass Thru Toll Rv Lt Tx BdSr07	771,194 85
3312	Unltd Tax Road Bonds Sr 2009	577,180 78
3315	Galv Causeway RR Bridge Proj	45,877 41
6123	Group,Wrks'Comp,Unemplmnt Ins	61,078 96
7605	Escrow Fund	5,651 51

Galveston County, Texas

List of County Auditor's Approved Claims For Voucher Warrants Dated 08/21/2012

Grand Total: 3,292,968.97

Galveston County, Texas

List of County Auditor's Approved Claims For Voucher Warrants Dated 08/21/2012

Approved Order to pay by Commissioners Court this day August 21, 2012

Cliff Billingsley, County Auditor

Mark A. Henry, Galveston County Judge

Patrick Doyle, Galveston County Commissioner, Pct 1

Kevin D. O'Brien, Galveston County Commissioner, Pct 2

Stephen D. Holmes, Galveston County Commissioner, Pct 3

ATTEST:

Dwight D. Sullivan, County Clerk

Kenneth Clark, Galveston County Commissioner, Pct 4

By: Brandy Chapman Deputy
Brandy Chapman

Check	Payee ID	Payee Name	Date	Check Amount	Type	Subs	Rel To	Note
A200358821	714637	A*MED MEDICAL INC	08/21/12	25 00	MW	OH		
A200358822	714662	AARON AND QUIRK LLP	08/21/12	10 00	MW	OH		
A200358823	408305	ABC STEEL PRODUCTS CO INC	08/21/12	535 50	MW	OH		
A200358824	702471	ABL MANAGEMENT INC	08/21/12	17,867 73	MW	OH		
A200358825	713428	ABM JANITORIAL SERVICES - SOU	08/21/12	56,410 43	MW	OH		
A200358826	706405	ACHARYA MD PA,SID	08/21/12	17 64	MW	OH		
A200358827	400871	ACTION PERSONNEL INC	08/21/12	570 00	MW	OH		
A200358828	707348	AIRGAS - SOUTHWEST INC	08/21/12	51 00	MW	OH		
A200358829	712189	ALAMO TITLE COMPANY	08/21/12	28 00	MW	OH		
A200358830	706649	ALERE TOXICOLOGY SERVICES INC	08/21/12	1,762 00	MW	OH		
A200358831	017939	ALEX AIR CONDITIONING INC	08/21/12	3,789 69	MW	OH		
A200358832	714492	ALFAX FURNITURE	08/21/12	1,014 00	MW	OH		
A200358833	710243	ALLIGARE LLC	08/21/12	1,657 20	MW	OH		
A200358834	707451	ALWAYS SAFETY AND 1ST AID INC	08/21/12	49 95	MW	OH		
A200358835	711548	AMERICAN HOMESTAR CORPORATION	08/21/12	10,915 81	MW	OH		
A200358836	702478	AMERSON, RODGER DAN	08/21/12	750 00	MW	OH	B7	
A200358837	709784	AT&T MOBILITY	08/21/12	233 93	MW	OH		
A200358838	712386	BAHEC LLC	08/21/12	884 52	MW	OH		
A200358839	709910	BARNETT, STEPHANIE B	08/21/12	624 00	MW	OH	B7	
A200358840	711300	BARRIER REEF EMERGENCY PHYSIC	08/21/12	535 80	MW	OH		
A200358841	710853	BAY AREA ANESTHESIA SERVICES	08/21/12	324 93	MW	OH		
A200358842	432285	BAY AREA RECOVERY CENTER	08/21/12	1,244 00	MW	OH		
A200358843	714736	BAY COLONY COMMUNITY IMPROVEM	08/21/12	8,365 56	MW	OH		
A200358844	021360	BAY OIL CO CORP	08/21/12	24,276 87	MW	OH		
A200358845	431686	BEELER MANSKE CLINIC LLP	08/21/12	302 73	MW	OH		
A200358846	401969	BENNETT, JAMES M	08/21/12	2,210 00	MW	OH	B7	

Check	Payee ID	Payee Name	Date	Check Amount	Type	Subs	Rel To	Note
A200358847	403751	BERARDINELLI CORREIA, SHAUNA	08/21/12	881 25	MW	OH	B7	
A200358848	406081	BETA TECHNOLOGY INC	08/21/12	644 40	MW	OH		
A200358849	700686	BFI WASTE SERVICES OF TEXAS L	08/21/12	1,194 55	MW	OH		
A200358850	711556	BINKLEY & BARFIELD INC	08/21/12	119,193 02	MW	OH		
A200358851	712358	BNSF RAILWAY COMPANY	08/21/12	1,602 41	MW	OH		
A200358852	712882	BOB J JOHNSON & ASSOCIATES	08/21/12	183 60	MW	OH		
A200358853	408363	BONO, JONI	08/21/12	1,677 00	MW	OH	B7	
A200358854	709220	BOON CHAPMAN BENEFIT ADMINIST	08/21/12	10,390 00	MW	OH		
A200358855	702559	BRIGGS, LYNETTE	08/21/12	416 00	MW	OH	B7	
A200358856	024240	BROOKSIDE EQUIP SALES INC	08/21/12	172 86	MW	OH		
A200358857	713105	BUCSANYI FAMILY MANAGEMENT CO	08/21/12	538 65	MW	OH		
A200358858	713513	BURKE AUSTIN MOORE	08/21/12	97 50	MW	OH	B7	
A200358859	711036	BUZBEE PROPERTIES INC	08/21/12	2,770 36	MW	OH		
A200358860	711146	BYRDSON SERVICES LLC	08/21/12	799 90	MW	OH		
A200358861	406719	CAPITAL GRAPHICS INC	08/21/12	973 25	MW	OH		
A200358862	708822	CAREHERE LLC	08/21/12	16,864 01	MW	OH		
A200358863	708822	CAREHERE LLC	08/21/12	26,014 95	MW	OH		
A200358864	702081	CEASER, KENDRIC	08/21/12	4,452 50	MW	OH	B7	
A200358865	407782	CENTERPOINT ENERGY	08/21/12	410 93	MW	OH		
A200358866	714661	CENTURY OAKS TITLE LLC	08/21/12	16 00	MW	OH		
A200358867	714660	CHERNOSKY,SMITH,RESSLING & SM	08/21/12	20 00	MW	OH		
A200358868	712596	CHERRY CRUSHED CONCRETE	08/21/12	3,604 36	MW	OH		
A200358869	706090	CITI BANK USA N A	08/21/12	131 42	MW	OH		
A200358870	033985	CITY OF GALVESTON	08/21/12	360 29	MW	OH		
A200358871	033589	CITY OF SANTA FE	08/21/12	3,876 93	MW	OH		
A200358872	712035	CLEAR LAKE PATHOLOGY PARTNERS	08/21/12	8 82	MW	OH		

Check	Payee ID	Payee Name	Date	Check Amount	Type	Subs	Rel To	Note
A200358873	710180	CLEVELAND ASPHALT PRODUCTS IN	08/21/12	9,117 67	MW	OH		
A200358874	713147	CLINICAL PATHOLOGY LABORATORI	08/21/12	120 65	MW	OH		
A200358875	709601	COASTAL GASTROENOLOGY ASSOCIA	08/21/12	33 27	MW	OH		
A200358876	707069	COBB FENDLEY & ASSOCIATES	08/21/12	3,380 20	MW	OH		
A200358877	034124	COLE PH D , COLLIER M	08/21/12	5,295 00	MW	OH		
A200358878	034223	COLTZER, ROBERT G	08/21/12	331 50	MW	OH	B7	
A200358879	713167	COMMONWEALTH TITLE OF HOUSTON	08/21/12	24 00	MW	OH		
A200358880	714267	COMMUNITY PATHOLOGY ASSOCIATE	08/21/12	1,095 91	MW	OH		
A200358881	400896	COOK, DAVID	08/21/12	593 00	MW	OH	B7	
A200358882	410293	CORRECTIONS SOFTWARE CORPORAT	08/21/12	4,378 00	MW	OH		
A200358883	403364	CROP PRODUCTION SERVICES	08/21/12	333 00	MW	OH		
A200358884	704992	DAHLENBURG, MICHAEL L	08/21/12	162 50	MW	OH	B7	
A200358885	713994	DANESI'S OUTDOOR SERVICES	08/21/12	10,206 00	MW	OH		
A200358886	713177	DIAZ, DEBBIE	08/21/12	126 54	MW	OH		
A200358887	706153	DIAZ, MARK A	08/21/12	715 00	MW	OH	B7	
A200358888	713268	DICKEY, TAMYRA	08/21/12	80 48	MW	OH		
A200358889	714663	DLH GEOSURV LLC	08/21/12	8 00	MW	OH		
A200358890	714588	DOPICO, MARY	08/21/12	607 50	MW	OH	B7	
A200358891	708361	DRAGONY, RACHEL ANN	08/21/12	1,787 50	MW	OH	B7	
A200358892	045286	DUCOTE, JAMES	08/21/12	810 55	MW	OH	B7	
A200358893	701181	DUCOTE, JEREMY B	08/21/12	325 00	MW	OH	B7	
A200358894	714665	DULIN, MARGARET C	08/21/12	7 00	MW	OH		
A200358895	712144	DUNAWAY, LORI	08/21/12	1,410 00	MW	OH		
A200358896	714656	DUNTEN LAW FIRM	08/21/12	32 00	MW	OH		
A200358897	713675	EDDY, CYNTHIA	08/21/12	66 99	MW	OH		
A200358898	712652	EDOCUMENT RESOURCES LLC	08/21/12	21,636 52	MW	OH		

Check	Payee ID	Payee Name	Date	Check Amount	Type	Subs	Rel To	Note
A200358899	714274	ELLIS, SABRINA E	08/21/12	700 00	MW	OH	B7	
A200358900	710066	EMILY A FISHER PLLC	08/21/12	392 00	MW	OH	B7	
A200358901	710066	EMILY A FISHER PLLC	08/21/12	929 92	MW	OH	B7	
A200358902	712213	ERSKINE, LYNNETTE D	08/21/12	51 20	MW	OH		
A200358903	714719	ESQUIRE DEPOSITION SOLUTIONS	08/21/12	874 68	MW	OH		
A200358904	061234	FAMILY SERVICE CENTER OF GALV	08/21/12	17,075 90	MW	OH		
A200358905	711189	FANNING AND FANNING PLLC	08/21/12	1,235 00	MW	OH	B7	
A200358906	410365	FAUS, SALVADOR	08/21/12	644 55	MW	OH	B7	
A200358907	711019	FINEGAN, SAMUEL K	08/21/12	1,235 00	MW	OH	B7	
A200358908	703810	FIRST CHOICE POWER	08/21/12	109 33	MW	OH		
A200358909	709477	FISHER, DENA LAURA	08/21/12	1,820 00	MW	OH	B7	
A200358910	712917	FLEMING LAW FIRM	08/21/12	1,300 00	MW	OH	B7	
A200358911	710682	FOWLER, JANA K	08/21/12	253 28	MW	OH	B7	
A200358912	713707	FRYE STEIDLEY OAKS AND BENAVI	08/21/12	1,177 50	MW	OH	B7	
A200358913	704440	FULK, GEORGE BYRON	08/21/12	195 00	MW	OH	B7	
A200358914	704625	G & K SERVICES	08/21/12	597 29	MW	OH		
A200358915	431945	GALVESTON COUNTY HEALTH DISTR	08/21/12	205 00	MW	OH		
A200358916	071175	GALVESTON COUNTY WCID #1	08/21/12	32 14	MW	OH		
A200358917	708789	GAMMA WASTE SYSTEMS	08/21/12	140 00	MW	OH		
A200358918	713717	GARCIA, CHERI	08/21/12	570 00	MW	OH	B7	
A200358919	711807	GARRETT, FRED	08/21/12	113 75	MW	OH	B7	
A200358920	701571	GELB, JEFFREY	08/21/12	1,088 75	MW	OH	B7	
A200358921	703986	GILLMAN, MICHAEL DAVID	08/21/12	260 00	MW	OH	B7	
A200358922	714494	GLENN, DORYN DANNER	08/21/12	121 05	MW	OH		
A200358923	714494	GLENN, DORYN DANNER	08/21/12	100 00	MW	OH		
A200358924	073668	GLYWASKY, DONALD	08/21/12	361 73	MW	OH		

Check	Payee ID	Payee Name	Date	Check Amount	Type	Subs	Rel To	Note
A200358925	708298	GOLDSBERRY & ASSOCIATES PLLC	08/21/12	195 00	MW	OH	B7	
A200358926	708298	GOLDSBERRY & ASSOCIATES PLLC	08/21/12	195 00	MW	OH	B7	
A200358927	709134	GRAHAM, CARMEN A	08/21/12	858 00	MW	OH	B7	
A200358928	074112	GRAYBAR ELECTRIC CO INC	08/21/12	1,061 00	MW	OH		
A200358929	712786	GREATER HOUSTON ANESTHESIOLOG	08/21/12	342 98	MW	OH		
A200358930	706411	GREATER HOUSTON EMERGENCY PHY	08/21/12	1,691 88	MW	OH		
A200358931	714532	GREENMAN PEDERSEN INC	08/21/12	4,275 00	MW	OH		
A200358932	710992	GULDE MD PA, JANIS	08/21/12	423 45	MW	OH		
A200358933	703785	GULF COAST AEROBIC SERVICES	08/21/12	2,429 50	MW	OH		
A200358934	400782	GULF COAST CENTER	08/21/12	7,228 75	MW	OH		
A200358935	401104	GULFSIDE OVERHEAD DOOR COMPAN	08/21/12	135 00	MW	OH		
A200358936	700466	HALFF ASSOCIATES	08/21/12	17,702 65	MW	OH		
A200358937	700466	HALFF ASSOCIATES	08/21/12	35,102 98	MW	OH		
A200358938	700466	HALFF ASSOCIATES	08/21/12	27,286 59	MW	OH		
A200358939	714659	HANSZEN LAPORTE LLP	08/21/12	10 00	MW	OH		
A200358940	705115	HENRY, THERESA	08/21/12	2,642 25	MW	OH	B7	
A200358941	705115	HENRY, THERESA	08/21/12	1,267 50	MW	OH	B7	
A200358942	714627	HILL, KELLIE	08/21/12	70 00	MW	OH		
A200358943	083501	HINDMAN, MARGARET	08/21/12	357 50	MW	OH	B7	
A200358944	083501	HINDMAN, MARGARET	08/21/12	763 75	MW	OH	B7	
A200358945	409105	HOME DEPOT	08/21/12	1,173 85	MW	OH		
A200358946	712986	HOUSTON PROGRESSIVE RADIOLOGY	08/21/12	50 26	MW	OH		
A200358947	701822	HTI LTD	08/21/12	3,914 03	MW	OH		
A200358948	700251	HUBCO INC	08/21/12	53,320 80	MW	OH		
A200358949	707488	IBRAHIM & ELLIOTT LLP	08/21/12	3,672 50	MW	OH	B7	
A200358950	707488	IBRAHIM & ELLIOTT LLP	08/21/12	1,540 00	MW	OH	B7	

Check	Payee ID	Payee Name	Date	Check Amount	Type	Subs	Rel To	Note
A200358951	701244	IESI TX CORP ENVIRO TEX	08/21/12	98 95	MW	OH		
A200358952	706409	INPATIENT CONSULTANTS OF TEXA	08/21/12	330 17	MW	OH		
A200358953	707874	INTERVENTION RESOURCES	08/21/12	1,400 00	MW	OH		
A200358954	701901	J W KELSO COMPANY INC	08/21/12	99,934 57	MW	OH		
A200358955	701901	J W KELSO COMPANY INC	08/21/12	54,949 75	MW	OH		
A200358956	714749	J VARA INVESTIGATIONS	08/21/12	900 00	MW	OH	B7	
A200358957	713785	J2 LABORATORIES INC	08/21/12	992 00	MW	OH		
A200358958	714672	JACKSON, BARNEY	08/21/12	70 00	MW	OH		
A200358959	712357	JACKSON, ERIN LARENA	08/21/12	516 75	MW	OH	B7	
A200358960	409049	JAHN-GALVESTON INSURANCE AGEN	08/21/12	6,212 00	MW	OH		
A200358961	408547	JALUFKA, GAIL	08/21/12	2,064 00	MW	OH	B7	
A200358962	410096	JOHN A WALKER ROOFING CO INC	08/21/12	1,190 00	MW	OH		
A200358963	711238	JOHNSON, CAROLYN MARKS	08/21/12	5,654 80	MW	OH	EX	
A200358964	701979	JONES LAW FIRM	08/21/12	253 50	MW	OH	B7	
A200358965	701243	JONES, STACEY LEE	08/21/12	7,109 75	MW	OH	B7	
A200358966	701243	JONES, STACEY LEE	08/21/12	3,185 00	MW	OH	B7	
A200358967	410476	JP MORGAN CHASE	08/21/12	273,656 30	MW	OH		
A200358968	714746	KAHLA, JOE GLENN	08/21/12	20,000 00	MW	OH		
A200358969	405344	KENNIE, MARGARET	08/21/12	650 00	MW	OH	B7	
A200358970	712256	KIESCHNICK, JONATHAN C	08/21/12	763 75	MW	OH	B7	
A200358971	700067	KILGORE, JEFFREY A	08/21/12	875 00	MW	OH	B7	
A200358972	402386	KLEEN JANITORIAL SUPPLY COMPA	08/21/12	6,521 48	MW	OH		
A200358973	400654	KNOWLES LAW BOOK PUBLISHING I	08/21/12	90 60	MW	OH		
A200358974	713306	KONE INC	08/21/12	1,503 50	MW	OH		
A200358975	706952	KUTSCHKE, MELINDA	08/21/12	1,300 00	MW	OH	B7	
A200358976	407886	LABORATORY CORPORATION OF AME	08/21/12	328 84	MW	OH		

Check	Payee ID	Payee Name	Date	Check Amount	Type	Subs	Rel To	Note
A200358977	712831	LAW OFFICE OF ALEX BILL III	08/21/12	292 50	MW	OH	B7	
A200358978	701780	LAW OFFICE OF DONNA L LELEUX	08/21/12	357 50	MW	OH	B7	
A200358979	706605	LAW OFFICE OF MICHELE BASSETT	08/21/12	1,881 25	MW	OH	B7	
A200358980	713605	LAW OFFICE OF PHILLIP M DAVI	08/21/12	445 00	MW	OH	B7	
A200358981	713238	LAW OFFICE OF SHAW CLIFFORD	08/21/12	682 50	MW	OH	B7	
A200358982	403281	LAW OFFICES OF DAVID P WALKER	08/21/12	182 00	MW	OH	B7	
A200358983	714671	LAWRENCE AND BACA PLLC	08/21/12	5 00	MW	OH		
A200358984	404959	LEE, DALE W	08/21/12	1,268 00	MW	OH	B7	
A200358985	711564	LEO A DALY COMPANY	08/21/12	33,380 70	MW	OH		
A200358986	709682	LEOPOLD, WILLIAM E	08/21/12	2,975 00	MW	OH	RE	
A200358987	708867	LEWIS MD, BEVERLY GUILLORY	08/21/12	1,264 35	MW	OH		
A200358988	714668	LEWIS, DELORIS	08/21/12	100 00	MW	OH		
A200358989	123026	LIGGIOS TIRE AND SERVICE CENT	08/21/12	7,072 56	MW	OH		
A200358990	714728	LINDBLADE, ALLISON	08/21/12	93 50	MW	OH		
A200358991	703141	LJA ENGINEERING & SURVEYING I	08/21/12	1,686 53	MW	OH		
A200358992	705152	LOVE, PAUL	08/21/12	227 50	MW	OH	B7	
A200358993	711912	M BRUCE FORT PC	08/21/12	1,189 50	MW	OH	B7	
A200358994	709123	M FOX CURL AND ASSOCIATES PC	08/21/12	1,106 30	MW	OH	B7	
A200358995	711130	MAINLAND MULTI-SPECIALTY GROU	08/21/12	1,869 12	MW	OH		
A200358996	706406	MAINLAND RADIOLOGICAL ASSOCIA	08/21/12	274 52	MW	OH		
A200358997	136192	MAINLAND TOOL AND SUPPLY INC	08/21/12	389 90	MW	OH		
A200358998	709125	MALONEY & PARKS LLP	08/21/12	812 50	MW	OH	B7	
A200358999	712884	MARCUS, AARON C	08/21/12	58 97	MW	OH		
A200359000	407300	MARION, WILLIAM DAVID	08/21/12	221 00	MW	OH	B7	
A200359001	701730	MARKETING SPECIALTIES INC	08/21/12	412 00	MW	OH		
A200359002	714678	MARY MOODY NORTHEN ENDOWMENT	08/21/12	400,000 00	MW	OH		

Check	Payee ID	Payee Name	Date	Check Amount	Type	Subs	Rel To	Note
A200359003	705424	MASTER WORD SERVICE INC	08/21/12	4,749 27	MW	OH		
A200359004	407317	MATHESON TRI-GAS INC	08/21/12	298 63	MW	OH		
A200359005	404930	MCCARNES, LOIS	08/21/12	2,145 00	MW	OH	B7	
A200359006	707872	MCQUAGE PC, THOMAS W	08/21/12	8,515 30	MW	OH		
A200359007	131029	MCREE FORD INC	08/21/12	7 96	MW	OH		
A200359008	709045	MEIER, SHARON K	08/21/12	570 00	MW	OH	B7	
A200359009	713348	MELAMED, SANFORD	08/21/12	130 00	MW	OH	B7	
A200359010	711185	MEMORIAL HERMANN HOSPITAL SYS	08/21/12	49,602 05	MW	OH		
A200359011	713385	MEMORIAL PATHOLOGY CONSULTANT	08/21/12	127 24	MW	OH		
A200359012	713385	MEMORIAL PATHOLOGY CONSULTANT	08/21/12	71 85	MW	OH		
A200359013	404466	MEMORIAL RADIOLOGY ASSOCIATES	08/21/12	201 04	MW	OH		
A200359014	712341	METRO CITY CONSTRUCTION LP	08/21/12	82,976 36	MW	OH		
A200359015	711805	MILLER, ROBERT DAVID	08/21/12	747 50	MW	OH	B7	
A200359016	032250	MITCHELL CHUOKE PLUMBING CO	08/21/12	10,767 13	MW	OH		
A200359017	707294	MODJESKI AND MASTERS INC	08/21/12	40,000 00	MW	OH		
A200359018	708832	MONTY NICHOLS INC	08/21/12	48 00	MW	OH		
A200359019	401421	MOODY NATIONAL BANK	08/21/12	69 76	MW	OH		
A200359020	405987	MUELLER, DINAH J	08/21/12	940 00	MW	OH	B7	
A200359021	705888	NAJER, MAURICE	08/21/12	195 00	MW	OH	B7	
A200359022	712306	NELSON, MURREL	08/21/12	4 32	MW	OH		
A200359023	714434	NELSON, TAD A	08/21/12	3,894 49	MW	OH	B7	
A200359024	713099	NGUYEN, JASON	08/21/12	44 00	MW	OH		
A200359025	410734	NICHOLSON, CONNIE	08/21/12	81 59	MW	OH		
A200359026	409667	NORTHERN TOOL EQUIPMENT COMPA	08/21/12	1,098 01	MW	OH		
A200359027	711213	NRG ENERGY INC	08/21/12	580 52	MW	OH		
A200359028	714731	OGDEN, KELLY	08/21/12	50 00	MW	OH		

Check	Payee ID	Payee Name	Date	Check Amount	Type	Subs	Rel To	Note
A200359029	704067	ORDAZ, WILLIAM	08/21/12	141 53	MW	OH		
A200359030	710160	ORTIZ-TAING LAW FIRM PC	08/21/12	260 00	MW	OH	B7	
A200359031	400105	OWEN ELECTRIC SUPPLY	08/21/12	289 70	MW	OH		
A200359032	705290	PALMER, MICHAEL	08/21/12	422 50	MW	OH	B7	
A200359033	701800	PATHWAY TO RECOVERY INC	08/21/12	594 00	MW	OH		
A200359034	706418	PATIENT'S ANESTHESIA GROUP PA	08/21/12	848 42	MW	OH		
A200359035	705136	PENINSULA SANITATION SERVICE	08/21/12	4,050 00	MW	OH		
A200359036	709286	PESTMASTER SERVICES INC	08/21/12	350 50	MW	OH		
A200359037	713564	PETROFF, KEVIN	08/21/12	68 00	MW	OH		
A200359038	406092	POOR, SHERIFF FREDDIE	08/21/12	3,375 00	MW	OH		
A200359039	714658	PORTER HEDGES LLP	08/21/12	9 00	MW	OH		
A200359040	714348	PROFESSIONAL CERAMIC TILE INC	08/21/12	7,450 00	MW	OH		
A200359041	711312	QUEST DIAGNOSTICS CLINICAL LA	08/21/12	607 15	MW	OH		
A200359042	705753	QUINTANILLA, DONNIE	08/21/12	1,592 50	MW	OH	B7	
A200359043	055012	R B EVERETT & CO	08/21/12	779 85	MW	OH		
A200359044	410560	R M SILKSCREEN	08/21/12	1,485 00	MW	OH		
A200359045	712886	R W LUCAS CONSTRUCTION LLC	08/21/12	303,987 95	MW	OH		
A200359046	706403	REED ELSEVIER INC	08/21/12	460 00	MW	OH		
A200359047	410432	REED, WILLIAM	08/21/12	25 00	MW	OH		
A200359048	713445	ROBERTS, BARBARA	08/21/12	195 00	MW	OH		
A200359049	704853	ROSS	08/21/12	414 00	MW	OH		
A200359050	710577	RUSSELL, GREG	08/21/12	2,436 44	MW	OH	B7	
A200359051	403785	SAENZ, ALVIN N	08/21/12	747 50	MW	OH	B7	
A200359052	401775	SAFETY KLEEN CORP	08/21/12	283 18	MW	OH		
A200359053	191023	SANTA FE AUTO PARTS INC	08/21/12	901 16	MW	OH		
A200359054	402429	SCHMALSTEIG MD, ELISABETH J	08/21/12	117 74	MW	OH		

Check	Payee ID	Payee Name	Date	Check Amount	Type	Subs	Rel To	Note
A200359055	714669	SCHULT, JENNIFER	08/21/12	230 00	MW	OH		
A200359056	701888	SCOTT, SHELBY	08/21/12	1,283 75	MW	OH	B7	
A200359057	701888	SCOTT, SHELBY	08/21/12	950 00	MW	OH	B7	
A200359058	711834	SEARS & BENNETT LLP	08/21/12	341 25	MW	OH	B7	
A200359059	711870	SHAWHAN, MATTHEW	08/21/12	74 37	MW	OH		
A200359060	713490	SHERMAN WATKINS PLLC	08/21/12	195 00	MW	OH	B7	
A200359061	714664	SHETTLE, AUBYN KEITH	08/21/12	150 00	MW	OH		
A200359062	700250	SIEMENS BUILDING TECHNOLOGIES	08/21/12	500 00	MW	OH		
A200359063	714657	SILVER STAR TITLE	08/21/12	40 00	MW	OH		
A200359064	704656	SIMMONS, MARILYN H	08/21/12	120 00	MW	OH		
A200359065	713532	SMITH, MEGHANN	08/21/12	227 50	MW	OH	B7	
A200359066	714675	SNOOK, KELLY	08/21/12	100 00	MW	OH		
A200359067	704289	SOLUTIONS4SURE COM INC	08/21/12	96 08	MW	OH		
A200359068	713129	SOUTHWEST T & I INC	08/21/12	304 50	MW	OH		
A200359069	500042	STANDARD INSURANCE CO	08/21/12	15,225 00	MW	OH		
A200359070	194167	STATE BAR OF TEXAS	08/21/12	137 00	MW	OH		
A200359071	194167	STATE BAR OF TEXAS	08/21/12	295 00	MW	OH		
A200359072	711361	STERLING LAW FIRM, THE	08/21/12	950 00	MW	OH	B7	
A200359073	409104	STEVE'S WAREHOUSE TIRES	08/21/12	15 00	MW	OH		
A200359074	194514	STEVENS, MARK W	08/21/12	844 00	MW	OH	B7	
A200359075	709091	STICKLER, TOMMY JAMES	08/21/12	1,045 00	MW	OH	B7	
A200359076	702839	SUHLER, DAVID	08/21/12	330 00	MW	OH	B7	
A200359077	711234	SULLIVAN LAND SERVICES LTD	08/21/12	89,934 90	MW	OH		
A200359078	702386	SULLIVAN, KIMBERLY A	08/21/12	23 80	MW	OH		
A200359079	405722	SUN COAST RESOURCES INC	08/21/12	150 00	MW	OH		
A200359080	707408	SUNGARD PUBLIC SECTOR INC	08/21/12	78,424 18	MW	OH		

Check	Payee ID	Payee Name	Date	Check Amount	Type	Subs	Rel To	Note
A200359081	195016	SUTHERLAND LUMBER SOUTHWEST I	08/21/12	616 64	MW	OH		
A200359082	410529	TAYLOR, ANGELA M	08/21/12	503 75	MW	OH	B7	
A200359083	710840	TECHNIQUE DATA SYSTEMS	08/21/12	800 00	MW	OH		
A200359084	408442	TEXAS ASSOCIATION FOR COURT A	08/21/12	250 00	MW	OH		
A200359085	407773	TEXAS ASSOCIATION OF COUNTY A	08/21/12	590 00	MW	OH		
A200359086	707658	TEXAS CITY FEED AND SUPPLY	08/21/12	83 96	MW	OH		
A200359087	714732	TEXAS JUVENILE JUSTICE DEPART	08/21/12	545 00	MW	OH		
A200359088	708583	TEXAS LAW & PSYCHIATRY PLLC	08/21/12	2,000 00	MW	OH	MH	
A200359089	202267	TEXAS PARKS AND WILDLIFE DEPT	08/21/12	2,276 51	MW	OH		
A200359090	406147	THOMA, JOHN	08/21/12	1,538 40	MW	OH	B7	
A200359091	714631	THOMAS, JOSEPH J	08/21/12	125 00	MW	OH		
A200359092	714628	TORRES, MELISSA	08/21/12	620 00	MW	OH		
A200359093	700583	TORRES, ROBERTO	08/21/12	433 32	MW	OH	B7	
A200359094	700583	TORRES, ROBERTO	08/21/12	698 75	MW	OH	B7	
A200359095	714614	TOWNSEND, MICHELLE RUTH	08/21/12	195 00	MW	OH	B7	
A200359096	700925	TRAVIS COUNTY	08/21/12	798 00	MW	OH		
A200359097	700925	TRAVIS COUNTY	08/21/12	2,693 00	MW	OH		
A200359098	711566	TREVINO, ISMAEL	08/21/12	2,405 00	MW	OH	B7	
A200359099	711781	TSA - TEXAS SURGICAL ASSOCIAT	08/21/12	3,778 95	MW	OH		
A200359100	405980	TURMAN AND ASSOCIATES INC	08/21/12	749 75	MW	OH	B7	
A200359101	710373	UNGER & HERSHKOWITZ	08/21/12	195 00	MW	OH	B7	
A200359102	409463	UNITED STATES POSTAL SERVICE	08/21/12	1,000 00	MW	OH		
A200359103	709761	USA MOBILITY WIRELESS INC	08/21/12	174 11	MW	OH		
A200359104	402812	UTMB	08/21/12	243 40	MW	OH		
A200359105	402812	UTMB	08/21/12	7,045 69	MW	OH		
A200359106	402812	UTMB	08/21/12	16,500 09	MW	OH		

Check	Payee ID	Payee Name	Date	Check Amount	Type	Subs	Rel To	Note
A200359107	402812	UTMB	08/21/12	1,300 00	MW	OH		
A200359108	703768	VALLEY SERVICES INC	08/21/12	42,951 36	MW	OH		
A200359109	714676	VALLEY SOLVENTS AND CHEMICALS	08/21/12	1,176 57	MW	OH		
A200359110	708752	VOICE4NET COM	08/21/12	50 00	MW	OH		
A200359111	702057	WALKER, MARGARET W	08/21/12	437 50	MW	OH	B7	
A200359112	231209	WALMART	08/21/12	672 48	MW	OH		
A200359113	701533	WEST PUBLISHING CORPORATION	08/21/12	221 04	MW	OH		
A200359114	714613	WEST, MERLYN	08/21/12	60 00	MW	OH		
A200359115	136432	WILBARGER COUNTY	08/21/12	685 00	MW	OH	MH	
A200359116	409097	WILLIAMS, MELISSA	08/21/12	176 00	MW	OH		
A200359117	711403	WRIGHT, ANDREW A	08/21/12	312 44	MW	OH	B7	
A200359118	242016	XEROX CORPORATION	08/21/12	62,023 79	MW	OH		
A200359119	251009	YARBROUGH, JANIS L	08/21/12	929 02	MW	OH	EX	
A200359120	714666	ZEIGLER, JOSEPH & MARY	08/21/12	6 00	MW	OH		
A200359121	712998	ZENDEH DEL AND ASSOCIATES PLL	08/21/12	400 00	MW	OH	B7	

S U B T O T A L S

Total Void Machine Written	0 00	Number of Checks Processed	0
Total Void Hand Written	0 00	Number of Checks Processed	0
Total Machine Written	2432,579 72	Number of Checks Processed	301
Total Hand Written	0 00	Number of Checks Processed	0
Total Reversals	0 00	Number of Checks Processed	0
Total Cancelled	0 00	Number of Checks Processed	0
S U B T O T A L	2432,579 72		

Check	Payee ID	Payee Name	Date	Check Amount	Type	Subs	Rel To	Note
F600000461	404603	BAKER, STEPHEN W	08/21/12	160 53	CX	OH		
F600000462	714252	CLASSIC AUTOPLEX GALVESTON	08/21/12	6,984 41	CX	OH		
F600000463	711931	DSW HOMES LLC	08/21/12	89,956 40	CX	OH		
F600000464	071118	GALVESTON NEWSPAPERS INC	08/21/12	415 87	CX	OH		
F600000465	403006	KEYWORTHS HARDWARE INC	08/21/12	42 75	CX	OH		
F600000466	711227	TRIPLE B SERVICES LLP	08/21/12	762,829 29	CX	OH		

S U B T O T A L S

Total Void Machine Written	0 00	Number of Checks Processed	0
Total Void Hand Written	0 00	Number of Checks Processed	0
Total Machine Written	0 00	Number of Checks Processed	0
Total Hand Written	0 00	Number of Checks Processed	0
Total Reversals	0 00	Number of Checks Processed	0
Total Cancelled	860,389 25	Number of Checks Processed	6
S U B T O T A L	860,389 25		

Check	Payee ID	Payee Name	Date	Check Amount	Type	Subs	Rel To	Note

G R A N D T O T A L S

Total Void Machine Written	0 00	Number of Checks Processed	0
Total Void Hand Written	0 00	Number of Checks Processed	0
Total Machine Written	2432,579 72	Number of Checks Processed	301
Total Hand Written	0 00	Number of Checks Processed	0
Total Reversals	0 00	Number of Checks Processed	0
Total Cancelled	860,389 25	Number of Checks Processed	6
G R A N D T O T A L	3292,968 97		

Galveston County, Texas

Supplemental List of County Auditor's Approved Claims For Voucher Warrants Dated 08/21/2012

Invoice Number	Account Info		Amount
FUND: 1101 General Fund			
Warrant #: VW 00359122	**Payee Name: AUDIMATION SERVICE INC**		
1207079	1101151300 - 5423500	County Auditor - Maintenance of Software	4,395 00
		Warrant Total:	**4,395.00**
Warrant #: VW 00359123	**Payee Name: BERTINI LAW FIRM PC**		
11CR3502/051112	1101121000 - 5431230	Justice Administration - Court Apptd Atty Dist Courts	357 50
323655/071712	1101122400 - 5431221	County Court #3 - Dupuy - Defense Atty Co Ct	178 75
		Warrant Total:	**536.25**
Warrant #: VW 00359125	**Payee Name: GALVESTON COUNTY WCID #1**		
120050039 81312	1101170100 - 5421100	Facilities Srvs & Maintenance - Water	157 99
		Warrant Total:	**157.99**
		FUND 1101 TOTAL:	**5,089.24**
FUND: 2915 CDBG Infrastructure Program			
Warrant #: VW 00359124	**Payee Name: CRAIN GROUP, LLC**		
9 072012	2915000000 - 2070001	CDBG Infrastructure Program - Contract Payable Retainage	33,657 16
		Warrant Total:	**33,657.16**
		FUND 2915 TOTAL:	**33,657.16**
FUND: 3120 Limited Tax Cnty Bldg Bds Sr09			
Warrant #: VW 00359126	**Payee Name: LUCAS CONSTRUCTION CO INC**		
12 081512	3120179331 - 5722000	Animal Resource Center - Construction Bldg Capital Outl	27,949 47
		Warrant Total:	**27,949.47**
Warrant #: VW 00359127	**Payee Name: STROMMEN PAINTING AND ENTERPRISES INC**		
5 ARC 062012	3120179331 - 5722000	Animal Resource Center - Construction Bldg Capital Outl	18,758 70
		Warrant Total:	**18,758.70**
		FUND 3120 TOTAL:	**46,708.17**

Galveston County, Texas

Supplemental List of County Auditor's Approved Claims For Voucher Warrants Dated 08/21/2012

Approved Order to pay by Commissioners Court this day August 21, 2012

Cliff Billingsley, County Auditor

Mark A. Henry, Galveston County Judge

Patrick Doyle, Galveston County Commissioner, Pct 1

Kevin D. O'Brien, Galveston County Commissioner, Pct 2

Stephen D. Holmes, Galveston County Commissioner, Pct 3

ATTEST:

Dwight D. Sullivan, County Clerk

Kenneth Clark, Galveston County Commissioner, Pct 4

By Brandy Chapman Deputy

Brandy Chapman

Check	Payee ID	Payee Name	Date	Check Amount	Type	Subs	Rel To	Note
A200359122	702419	AUDIMATION SERVICE INC	08/21/12	4,395 00	MW	OH		
A200359123	713399	BERTINI LAW FIRM PC	08/21/12	536 25	MW	OH	B7	
A200359124	713773	CRAIN GROUP, LLC	08/21/12	33,657 16	MW	OH		
A200359125	071175	GALVESTON COUNTY WCID #1	08/21/12	157 99	MW	OH		
A200359126	125518	LUCAS CONSTRUCTION CO INC	08/21/12	27,949 47	MW	OH		
A200359127	410015	STROMMEN PAINTING AND ENTERPR	08/21/12	18,758 70	MW	OH		

G R A N D T O T A L S

Total Void Machine Written	0 00	Number of Checks Processed	0
Total Void Hand Written	0 00	Number of Checks Processed	0
Total Machine Written	85,454 57	Number of Checks Processed	6
Total Hand Written	0 00	Number of Checks Processed	0
Total Reversals	0 00	Number of Checks Processed	0
Total Cancelled	0 00	Number of Checks Processed	0
G R A N D T O T A L	85,454 57		

AGENDA ITEM #1b

ORDER

On this the 21st day of August 2012, the Commissioners Court of Galveston County, Texas convened in a regularly scheduled meeting with the following members thereof present

Mark Henry, County Judge
Patrick Doyle, Commissioner, Precinct No 1
Kevin D O'Brien, Commissioner, Precinct No 2
Stephen Holmes, Commissioner, Precinct No. 3
Ken Clark, Commissioner, Precinct No 4 and
Dwight D Sullivan, County Clerk

when the following proceedings, among others, were had to-wit

Upon recommendation being received by the County Auditor, IT IS ORDERED that the County Clerk enter this ORDER in the minutes of the Commissioner's Court approving the biweekly payrolls of GALVESTON COUNTY, GALVESTON COUNTY HEALTH DISTRICT, AND GALVESTON COUNTY ROAD DISTRICT NO 1 as are shown on the payroll lists attached hereto and made a part hereof for all intents and purposes for the period ending Aug 15th, 2012 and being salary warrant numbers **PY0333925 through PY0333943 and EFT90342016 through EFT90343295.** The gross amount of such warrants are estimated· **$2,837,191.04 for Biweekly Payroll #17, 2012.**

UPON MOTION OF COUNTY ~~COMMISSIONER~~ JUDGE HENRY AND SECONDED

BY COMMISSIONER O'BRIEN THE ABOVE ORDER WAS PASSED THIS 21ST DAY

OF AUGUST, 2012 with 5 votes cast in favor thereof and 0 votes cast against

COUNTY OF GALVESTON, TEXAS

Mark Henry, County Judge

ATTEST:

Dwight D. Sullivan
County Clerk
By: Brandy Chapman Deputy
Brandy Chapman

RECOMMENDED

Cliff Billingsley, CPA
County Auditor

Galv Cnty Production

Employee Pay Assignment Changes for Payroll Period 8/2/2012 thru 8/15/2012

Division	Division Name	Employee Name	Type	Position Number and Description	Begin	End	GrSt	Annual	Rate *	Reason
114000	County Clerk	COMLAUX, CELESTE L	FTBE	17 SENIOR COURT CLERK	8/9/2012		12A1	$30 065	1 156 38 B	PROMOTION
114000	County Clerk	STOVER, CARLA J	FTBI	11 COURT CLERK	8/9/2012		11A1	$28,617	1,100 66 B	REASSIGNMENT
114000	County Clerk	YOUNGBLOOD,	FTBE	45 BALLOT BY MAIL CLERK	8/6/2012		12A1	$30,065	1,156 38 B	PROMOTION
114020	Co Clerk Rec Mgmt & Pres	MENDELL, RHETT I	FTBE	7 DEPUTY COUNTY CLERK	8/9/2012		10A1	$27 238	1,047 62 B	APPOINTMENT
114020	Co Clerk Rec Mgmt & Pres	BROWN, KELSEY L	PTNH	500 DEPUTY COUNTY CLERK-TEMP		8/15/2012	10A1	$13,624	13 10 H	TERMINATION
114030	Election Expense	MALIK, AISHA R	PTEL	500 ELECTION WORKER-TEMP	8/2/2012		0000	$10,400	10 00 H	APPOINTMENT
114030	Election Expense	SAUNIER, DEBORAH K	PTEL	500 ELECTION WORKER-TEMP	8/2/2012		0000	$10,400	10 00 H	APPOINTMENT
126100	District Clerk	DELGADO, DAVITA C	FTBE	20 SR DEPUTY DISTRICT CLERK	8/2/2012		12A1	$30 065	1,156 38 B	PROMOTION
126100	District Clerk	EDWARDS, OTHA F	FTBE	93 SR COURT CLERK	8/2/2012		16A1	$36,632	1 408 94 B	PROMOTION
126100	District Clerk	GREEN-PICKNEY, ALYTHIA	FTBE	29 SR DEPUTY DISTRICT CLERK	8/2/2012		12A1	$30,065	1,156 38 B	PROMOTION
126100	District Clerk	KAPLAN, DAVID R	FTBE	26 COURT CLERK COORDINATOR	8/2/2012		14C1	$34 867	1,341 05 B	PROMOTION
127100	District Attorney	HOLMES JACQUELINE Y	FTBE	77 LEGAL SECRETARY		8/9/2012	12A1	$30,065	1,156 38 B	TERMINATION
151300	County Auditor	CULLER MICHELLE E	FTBE	10 IT SYSTEMS TECHNICIAN	8/14/2012		12A1	$30,065	1 156 38 B	APPOINTMENT
151500	Tax Assessor/Collector	MYERS, BILLIE R	FTBE	15 ADMINISTRATIVE CLERK	8/2/2012		09A1	$25,925	997 14 B	APPOINTMENT
151500	Tax Assessor/Collector	GONZALEZ SYLVIA A	PTNH	504 CUSTOMER SERVICE REP-TEMP	8/6/2012		0000	$10,129	9 74 H	APPOINTMENT
151500	Tax Assessor/Collector	MCALLISTER, DOMINIQUE	PTNH	534 CUSTOMER SERVICE REP-TEMP	8/6/2012		0000	$10,129	9 74 H	APPOINTMENT
151500	Tax Assessor/Collector	ROBINSON, CASSANDRA A	PTNH	507 CUSTOMER SERVICE REP-TEMP	8/6/2012		0000	$10,129	9 74 H	APPOINTMENT
151500	Tax Assessor/Collector	SPROUSL, MARTHA A	PTNH	502 CUSTOMER SERVICE REP-TEMP	8/2/2012		0000	$10 129	9 74 H	APPOINTMENT
151500	Tax Assessor/Collector	VALLES, ELIZABETH A	PTNH	506 CUSTOMER SERVICE REP-TEMP	8/13/2012		0000	$10,129	9 74 H	APPOINTMENT
152500	Administration (even)	CANTU ANGELA A	FTBE	500 ADMINISTRATIVE ASSISTANT	8/13/2012		12A1	$30,065	1,156 38 B	APPOINTMENT
211133	Corrections-Sheriff	ADAMS, KIMBERLY J	FTBE	241 DEPUTY II		8/14/2012	14G1	$38,487	1,480 27 B	TERMINATION
211133	Corrections-Sheriff	BROOKS, SHAWNA M	FTBE	228 ENTRY LEVEL		8/15/2012	12D1	$32,377	1,245 30 B	TERMINATION
211133	Corrections-Sheriff	DREWES, LISA M	FTBE	158 DEPUTY II	8/9/2012		14G1	$38,487	1,480 27 B	CAREER LADDER
211133	Corrections-Sheriff	MCLEAN MICHAEL D	FTBE	235 DEPUTY I		8/15/2012	13D1	$34,016	1,308 34 B	TERMINATION
211133	Corrections-Sheriff	NELSON, LYNNICA N	FTBE	151 DEPUTY II	8 9/2012		14G1	$38,487	1,480 27 B	CAREER LADDER
211133	Corrections-Sheriff	YOST KENNETH H	FTBE	113 DEPUTY III	8/10/2012		15H1	$41,446	1 594 08 B	CAREER LADDER

* Rate Type H = Hourly B = Biweekly Salary

Galv Cnty Production

Employee Pay Assignment Changes for Payroll Period : 8/2/2012 thru 8/15/2012

Division	Division Name	Employee Name	Type	Position Number and Description	Begin	End	GrSt	Annual	Rate *	Reason
255100	Adult Probation	CLARK JR, GREGORY W	FTBE	28 PROBATION OFFICER		8/3/2012	0000	$33,499	1,288 46 B	TERMINATION
291010	Emergency Management	KRAFT, RONY A	PTNH	407 OEM SPECIALIST-TEMP	8/2/2012		12C1	$31,587	15 18 H	APPOINTMENT
291010	Emergency Management	WOLFSON SEAN A	PTNH	408 OEM SPECIALIST-TEMPORARY	8/2/2012	8/15/2012	12C1	$31 587	15 18 H	TERMINATION
296121	Seawall Maintenance	RODRIGUEZ DAVID K	FTBE	10 SEAWALL MAINTENANCE OPER	8/2/2012		10A1	$27,238	1,047 62 B	REASSIGNMENT
312120	F M Lateral Road	KLECKA JR, JOHNNIE R	FTBE	65 HEAVY EQUIPMENT OPERATOR	8/2/2012		10A1	$27,238	1,047 62 B	REASSIGNMENT
312120	F M Lateral Road	RIVERA SR, ALBERTO	FTBE	10 HEAVY EQUIPMENT OPER III		8/15/2012	12D1	$32,377	1 245 30 B	TERMINATION
443100	Indigent Care and Med	MCKENZIE, MARION C	FTBE	10 GUARDIAN	8/7/2012		16A1	$36,632	1 408 94 B	APPOINTMENT
451110	Senior Citizens Program	BELL, FORESTINE	FTBE	408 HOME DELIVERED DRIVER		8/15/2012	07A1	$23,487	903 36 B	APPOINTMENT
451110	Senior Citizens Program	JONES, DONALD R	FTBE	10 DRIVER-TEP PROGRAM		8/3/2012	07A1	$23 487	903 36 B	TERMINATION
522020	Parks Division	ANDERS JOHN J	FTBE	39 PARKS MAINTENANCE WORKER	8/13/2012		08A1	$24,676	949 10 B	PROMOTION
522020	Parks Division	BAXTER, JOHN H	FTBE	30 PARKS MAINTENANCE WORKER	8/13/2012		08A1	$24,676	949 10 B	PROMOTION
522020	Parks Division	ROUGELY MICHAEL J	FTBE	25 SENIOR PARKS MAINT WORKER	8/10/2012		10A1	$27 238	1 047 62 B	PROMOTION

* Rate Type H = Hourly, B = Biweekly Salary

AGENDA ITEM #1c

THE COUNTY OF GALVESTON

COUNTY AUDITOR'S OFFICE
P O Box 1418
GALVESTON, TEXAS 77553

Cliff Billingsley, CPA
County Auditor

Ron Chapa, CPA
First Assistant, Director of Auditing

Jeff Modzelewski, CPA
First Assistant, Director of Accounting

LaToya Jordan
First Assistant, I T System

August 21, 2012

Honorable Judge Mark A Henry and
Members of the Commissioners' Court

Honorable Judge and Members of the Court

Attached for your consideration is the internal audit review of the invoices regarding the CDBG Non-Housing Grant as of March 31, 2012 The review included an analysis of contract agreements, bid proposal requirements, invoices, and support documents to the invoices Also attached is the response letter from Mel Trammell, Director of Finance, dated August 6, 2012

Sincerely,

Cliff Billingsley, CPA
County Auditor

cc Mel Trammell, Director of Finance

Attachment Audit Review of invoices regarding the CDBG Non-Housing Grant as of March 31, 2012

THE COUNTY OF GALVESTON

COUNTY AUDITOR'S OFFICE
P O Box 1418
GALVESTON, TEXAS 77553

Cliff Billingsley, CPA
County Auditor

Ron Chapa, CPA
First Assistant, Director of Auditing

Jeff Modzelewski, CPA
First Assistant, Director of Accounting

LaToya Jordan
First Assistant, IT System

July 3, 2012

Mel Trammell, Director of Finance
722 Moody, 3rd Floor
Galveston, Texas 77550

Re Audit Review of invoices regarding the CDBG Non-Housing Grant as of March 31, 2012

Mr Mel Trammell

The Internal Audit Division has performed an internal review of the invoices regarding the CDBG Non-Housing Grant as of March 31, 2012. The review included an analysis of contract agreements, bid proposal requirements, invoices, and support documents to the invoices The primary objective of the internal review was to provide reasonable assurance that the invoices submitted were in compliance with the agreements entered into by Galveston County with the applicable engineer and/or construction contractor

Lori McWhirter, Auditor II, conducted a review of invoices submitted by the following vendors

- Crain Group, LLC, Contractor
- HALFF Associates, Engineer
- JC Stonewall Constructors, LP, Contractor
- Klotz Associates, Inc., Engineer
- Sterling Structures, Inc , Contractor

Each invoice was tested for accuracy, the existence of documents supporting the invoiced amounts, signatures of approval, and compliance with the contract agreements In addition, each project was reviewed to determine timeliness based on the contracted date of completion

The following is an explanation of the auditor's findings in the invoice review

Crain Group, LLC, Contractor

- San Leon Fire & EMS Facility (Bid #B111052)
- Lockwood, Andrew & Newman, Inc. (LAN), Engineer
- Contracted amount $684,000.00
- Amount invoiced at the time of the review $352,562.10
- Expected date of completion 8/18/2012
- No exceptions were detected in the payment applications submitted at the time of the review

Payroll Review

Diamond Power Services, LP - Wages paid for 'Electrical Apprentice' do not appear to be in compliance with the Davis-Bacon Act.
DM Collins Plumbing - Wages paid for 'Plumber Apprentice' do not appear to be in compliance with the Davis-Bacon Act.

HALFF Associates, Engineer

- Highway 6 Water / Wastewater Study (Bid #B101058)
- Contracted amount $250,000 00
- Amount invoiced at the time of the review $250,000.00
- Expected date of completion 11/17/2011
- Date of contract completion 10/31/2011
- Auditor's findings in invoice review

Invoice #H149983 - Percentage completion report does not tie back to the invoice
Invoice #H153041 - Missing the percentage completion report
Invoice #H154125 - Approval for the reimbursement for mileage and photocopies could not be substantiated through the contract agreement
Invoice #H156881 - Percentage completion report does not tie back to the invoice

JC Stonewall Constructors, LP, Contractor

- Emergency Generators for Galveston County Facilities (Bid #B111011)
- LJA Engineering & Surveying, Inc , Engineer
- Contracted amount $781,818 25
- Amount invoiced at the time of the review $596,485 77
- Expected date of completion 7/14/2011

JC Stonewall Constructors, LP, Contractor (cont.)

- Auditor's findings in invoice review

  San Leon MUD, Application and Certificate for Payment Number 3 A change order in the amount of $80,116.44 was applied to this application however the contractor increased the contract amount by $86,116 44, $6,000 00 more than the change order indicated Neither application number 3 nor application number 4 reflects the amount of the change order

  The project has exceeded the expected date of completion of 7/14/2011

  Payroll Review

  Standley Steel Inc. - Wages paid for 'helper' do not appear to be in compliance with the Davis-Bacon Act
  Patriot Civil Construction Corp. - Wages paid for 'Reinforcing Steel Setter' are not supported by the Davis-Bacon Wage Determination document
  I:45 Electric LLC – Wages paid for 'Journeyman Electrician' and 'Laborer' do not appear to be in compliance with the Davis-Bacon Act

Klotz Associates, Inc., Engineer

- Countywide Drainage Study (Bid #B101057)
- Contracted amount $2,000,000 00
- Amount invoiced at the time of the review $1,921,041 08
- Expected date of completion 11/17/2011
- No exceptions were detected in the invoices submitted at the time of the review

Sterling Structures, Inc.

- Crystal Beach Fire and EMS Facility (Bid #B111053)
- Lockwood, Andrew & Newman, Inc (LAN), Engineer
- Contracted amount $3,330,000 00
- Amount invoiced at the time of the review $371,156 36
- Expected date of completion 2/18/2013
- No exceptions were detected in the payment applications submitted at the time of the review

Sterling Structures, Inc. (cont.)

Payroll Review

Sterling Structures – The timesheets for payroll week ending 1/11/2012 and week ending 1/25/2012 have the wrong dates on them.
Age Construction – The hourly rate paid to all job classifications appears to be in compliance with the Davis-Bacon Act
Burt's Construction -The timesheet's gross amount earned was miscalculated for 2 employees
L. G. Barcus – The hourly rate paid to all job classifications appears to be in compliance with the Davis-Bacon Act

The above findings need to be addressed to ensure compliance with the agreements entered into by Galveston County with the applicable engineer and/or construction contractors involved with the CDBG Non-Housing Grant Our recommendations are as follows

- Provide documentation to support the hourly rate paid for 'Electrical Apprentice', 'Plumbing Apprentice', 'Ironworker', 'Reinforcing Steel Setter', 'Journeyman Electrician', 'Laborer', 'Supervisor', and 'Superintendent'.
- Provide timesheets with the correct dates for payroll week ending 1/11/2012 and week ending 1/25/2012
- Provide support for the authorized reimbursement for mileage and photocopies
- Provide support for the $6,000 00 increase in the change order for San Leon MUD, Application and Certificate for Payment Number 3
- Provide a San Leon MUD, Application and Certificate for Payment that reflects the change order
- Develop an adequate checklist for the review process that includes signatures of approval, reimbursements, hourly rates for job classifications, timesheet dates and calculations, change orders, tracking the date of completion, and connecting the percentage completion report to the invoice

If you have any questions or concerns regarding the review, please contact Ron Chapa, First Assistant, Director of Auditing, at (409) 770-5302 or Kristin Rother, Internal Auditor III, at (409) 770-5408

Sincerely,

Cliff Billingsley, CPA
County Auditor

Nicholas Foster
CDBG Coordinator
Phone (409) 770-5358
Fax (409) 770-5341
Nicholas Foster@co galveston tx us

Debbie Andree
Budget/Grant Specialist
Phone (409) 770-5367
Fax (409) 765-3137
Debbie Andree@co galveston tx us

Galveston County Department of Finance & Administration

Mel Trammell
Director of Finance
Budget Officer
Galveston County Courthouse
722 Moody, Third Floor
Galveston, Texas 77550
Phone (409) 770-5398
Direct Fax (409) 765-3242
Mel trammell@co galveston tx us

Cindy Alcala
Grants Manager
Phone (409) 770-5355
Direct Fax (409) 766-2539
Cynthia Alcala@co galveston tx us

Denise Yearnd
Senior Financial Analyst
Phone (409) 770-5367
Direct Fax (409) 765-3137
Denise Yearnd@co galveston tx us

August 6, 2012

CDBG Non-Housing Report:

Addressed below are the issues identified in the Non-Housing report and the corrective actions that are ongoing or have been resolved

1 There are 2 electrical apprentices and 1 plumber apprentice who are enrolled in a legitimate apprenticeship program. We need a copy of the document from the apprenticeship programs that report the journeyman/apprentice wage rate ratio
   a Grant administrator submitted the apprenticeship program documents for Diamond Power for the electrical apprentice He was paid correctly according to the program
   b The plumber apprentice listed on the previous payroll was not in an approved program so the contractor revised the payroll reports to reflect this worker as a Common Laborer in compliance with Davis Bacon

2 Invoice #H149983 – The percentage completion report does not tie back to the invoice
   a Response from Halff and Associates has been submitted to the County auditor for review as of 8/6/12

3 Invoice #H153041 – The percentage completion report is missing
   a Response from Halff and Associates has been submitted to the County auditor for review as of 8/6/12

4 Invoice #H154125 – We need support documents that indicate that mileage and photocopies are reimbursable expenses
   a Backup documentation has been requested from Klotz and is expected by 8/17/12

5 We need an explanation as to why the San Leon MUD change order request for $80,116 44 ending up costing $86,116 44
   a The dollar amount in question was a typographical error LJA, the engineer of record confirmed that the amount was $80,116 44 and this was corrected with the following pay request

6 Standley Steel, Inc – The job classification of 'helper' is not on the Davis-Bacon Wage Determination schedule for this project
   a The contractor was notified that they had not put the corrected classification on the payroll report They are working on revising this We expect receipt of the corrected payroll containing the correct classification of "laborer"c no later than 8/17/12

7 I 45 Electric – D Kent was paid $10 00 as a laborer The Davis-Bacon Wage Determination schedule for the project has 4 types of laborers Depending on which classification he falls under, he may have been underpaid

a Grant administrator supplied copies of the liquidated damages check, corrected payrolls, a copy of the restitution check as well as a letter to D Kent for underpayment

8 Sterling Structures – The timesheets for payroll week ending 1/11/2012 and week ending 1/25/2012 have the wrong dates on them
   a Grant administrator submitted corrected payroll nos 3 and 4

9 Burt's Construction – The timesheet's gross amount earned was miscalculated for 2 employees
   a Grant administrator submitted corrected payroll nos 1, 5,6, and 7

Nicholas Foster CDBG Project Coordinator

AGENDA ITEM #1d

THE COUNTY OF GALVESTON

COUNTY AUDITOR'S OFFICE
P O Box 1418
GALVESTON, TEXAS 77553

Cliff Billingsley, CPA
County Auditor

Ron Chapa, CPA
First Assistant, Director of Auditing

Jeff Modzelewski, CPA
First Assistant, Director of Accounting

LaToya Jordan
First Assistant, I.T System

August 21, 2012

Honorable Judge Mark A. Henry and
Members of the Commissioners' Court

Honorable Judge and Members of the Court:

Attached for your consideration is the internal audit report for the surprise cash count that was performed on July 16, 2012 for the County Parks Department

Sincerely,

Cliff Billingsley, CPA
County Auditor

cc: Ms Kelly Snook, Director

Attachment County Parks Cash Count Audit Report FY2012

THE COUNTY OF GALVESTON

COUNTY AUDITOR'S OFFICE
P O Box 1418
GALVESTON, TEXAS 77553

Cliff Billingsley, CPA
County Auditor

Ron Chapa, CPA
First Assistant, Director of Auditing

Jeff Modzelewski, CPA
First Assistant, Director of Accounting

LaToya Jordan
First Assistant, I T Systems

August 2, 2012

To Kelly Snook
Director

From. Lori McWhirter
Internal Auditor II

Re. County Parks Surprise Cash Count

A surprise cash count of the Department of Parks was conducted on July 16, 2012. The objective of the cash count was to determine if all the collections had been accounted for at the time of the surprise cash count

- All collections were accounted for at the time of the surprise cash count

I wish to thank Ms Snook and her staff for their cooperation and assistance

cc· Ron Chapa, First Assistant Director of Auditing

AGENDA ITEM #1e1

ORDER

On this 21st day of August, 2012, the Commissioners' Court of Galveston County, Texas convened in a regular meeting with the following members thereof present

Mark Henry, County Judge
Patrick F Doyle, Commissioner, Precinct No 1
Kevin O'Brien, Commissioner, Precinct No 2
Stephen Holmes, Commissioner, Precinct No 3
Ken Clark, Commissioner, Precinct No 4 and
Dwight D Sullivan, County Clerk

when the following proceedings, among others were had to-wit

Upon recommendation being received by the County Auditor, it is ordered that the County Clerk enter this Order in the minutes of the Commissioners' Court approving the payments of the monthly Health Insurance claims of GALVESTON COUNTY, GALVESTON COUNTY HEALTH DISTRICT, AND GALVESTON COUNTY ROAD DISTRICT NO 1 made by Boon Chapman for the month ending March 31, 2012 the gross amount of such payment being $807,237 27

UPON MOTION OF THE COUNTY ~~COMMISSIONER~~ JUDGE HENRY AND SECONDED BY COMMISSIONER O'BRIEN the above order was passed this 21ST DAY OF AUGUST, 2012 with 5 votes cast in favor thereof and 0 votes cast against

County of Galveston, Texas

Mark Henry, County Judge

ATTEST:

Dwight D. Sullivan
County Clerk
By: Brandy Chapman Deputy
Brandy Chapman

RECOMMENDED

Cliff Billingsley, CPA
County Auditor

AUDITOR'S OFFICE - ACCOUNTING DIVISION
BOON CHAPMAN - MNB3010008898
GALVESTON COUNTY HEALTH PLAN
BANK RECONCILIATION (IFAS 6123-000000-1013056)
March 31, 2012

BALANCES PER THE BANK				
	BEGINNING BALANCE	*DEPOSITS*	*WITHDRAWALS*	*ENDING BALANCE*
BANK	$ 39,393 61	$ 859,456 88	$ 594,596 14	$ 304,254 35
DEPOSITS IN TRANSIT				
PRIOR MONTH CLAIMS FUNDING	-			-
CURRENT MONTH CLAIMS FUNDING		-		-
				-
OUTSTANDING CHECKS				
PRIOR MONTH **80,205.57**	(80,205 57)		(80,205 57)	-
CURRENT MONTH **292,846.70**			292,846 70	(292,846 70)
ADJUSTMENTS				
Duplicate Ck#13710 clrd, ck13598 duplicate	54 49			54 49
Amount Error Ck# 13671 clrd1/4/08 as 13674 for 54 49 sb 6 81	47 58			47 58
Ck #28408 cleared 12/8/08 for 7 11 sb 7 34	(0 23)			(0 23)
3/1/10 Ck41715 cleared for 7 81 s/h/bn 47 81 is OS	47 81			47 81
8/20/10 Ck47153 cleared as 47151&ck47153 is in OS list for original	1,100 80			1,100 80
ADJUSTED BALANCES PER BANK	**$ (39,561.51)**	**$ 859,456.88**	**$ 807,237.27**	**$ 12,658.10**

BALANCES PER THE IFAS				
	BEGINNING BALANCE	*RECEIPTS*	*DISBURSEMENTS*	*ENDING BALANCE*
IFAS	$ 12,230 21	$ 859,427 43	$ 859,427 43	$ 12,230 21
ADJUSTMENTS				
1/17/12 Vpay credit	173 54			173 54
1/17/12 Vpay credit	173 54			173 54
2/28/12 Claims funded on 3/1/12	(52,190 16)		(52,190 16)	-
INTEREST:				-
Jan- 12	30 35			30 35
Feb-12	21 01			21 01
March-12		29 45		29 45
				-
ADJUSTED BALANCES PER BOOK	**$ (39,561.51)**	**$ 859,456.88**	**$ 807,237.27**	**$ 12,658.10**

AGENDA ITEM #1e2

THE STATE OF TEXAS
COUNTY OF GALVESTON

ORDER

On this 21st day of August, 2012, the Commissioners' Court of Galveston County, Texas convened in a regular meeting with the following members thereof present

Mark Henry, County Judge
Patrick F Doyle, Commissioner, Precinct No 1
Kevin O'Brien, Commissioner, Precinct No 2
Stephen Holmes, Commissioner, Precinct No 3
Ken Clark, Commissioner, Precinct No 4 and
Dwight D Sullivan, County Clerk

when the following proceedings, among others were had to-wit

Upon recommendation being received by the County Auditor, it is ordered that the County Clerk enter this Order in the minutes of the Commissioners' Court approving the payments of the monthly Health Insurance claims of GALVESTON COUNTY, GALVESTON COUNTY HEALTH DISTRICT, AND GALVESTON COUNTY ROAD DISTRICT NO 1 made by Boon Chapman for the month ending April 30, 2012 the gross amount of such payment being $619,642 05

UPON MOTION OF THE COUNTY ~~COMMISSIONER~~ JUDGE HENRY AND SECONDED BY COMMISSIONER O'BRIEN the above order was passed this 21ST DAY OF AUGUST, 2012 with 5 votes cast in favor thereof and 0 votes cast against

County of Galveston, Texas

Mark Henry, County Judge

ATTEST

Dwight D Sullivan
County Clerk
By: Brandy Chapman Deputy
Brandy Chapman

RECOMMENDED

Cliff Billingsley,CPA
County Auditor

AUDITOR'S OFFICE - ACCOUNTING DIVISION
BOON CHAPMAN - MNB3010008898
GALVESTON COUNTY HEALTH PLAN
BANK RECONCILIATION (IFAS 6123-000000-1013056)
April 30, 2012

BALANCES PER THE BANK	BEGINNING BALANCE	DEPOSITS	WITHDRAWALS	ENDING BALANCE
BANK	$ 304,254 35	$ 619,680 71	$ 832,018 91	$ 91,916 15
DEPOSITS IN TRANSIT				
PRIOR MONTH CLAIMS FUNDING	-			-
CURRENT MONTH CLAIMS FUNDING		-		-
OUTSTANDING CHECKS				
PRIOR MONTH **292,846.70**	(292,846 70)		(292,846 70)	-
CURRENT MONTH **80,469.84**			80,469 84	(80,469 84)
ADJUSTMENTS				
Duplicate Ck#13710 clrd, ck13598 duplicate	54 49			54 49
Amount Error Ck# 13671 clrd1/4/08 as 13674 for 54 49 sb 6 81	47 58			47 58
Ck #28408 cleared 12/8/08 for 7 11 sb 7 34	(0 23)			(0 23)
3/1/10 Ck41715 cleared for 7 81 s/h/bn 47 81 is OS	47 81			47 81
8/20/10 Ck47153 cleared as 47151&ck47153 is in OS list for original	1,100 80			1,100 80
ADJUSTED BALANCES PER BANK	**$ 12,658.10**	**$ 619,680.71**	**$ 619,642 05**	**$ 12,696.76**

BALANCES PER THE IFAS	BEGINNING BALANCE	RECEIPTS	DISBURSEMENTS	ENDING BALANCE
IFAS	$ 12,230 21	$ 619,642 05	$ 619,642 05	$ 12,230 21
ADJUSTMENTS.				
1/17/12 Vpay credit	173 54			173 54
1/17/12 Vpay credit	173 54			173 54
INTEREST.				-
Jan- 12	30 35			30 35
Feb-12	21 01			21 01
March-12	29 45			29 45
April-12		38 66		38 66
ADJUSTED BALANCES PER BOOK	**$ 12,658.10**	**$ 619,680.71**	**$ 619,642.05**	**$ 12,696.76**

AGENDA ITEM #1e3

ORDER

On this 21st day of August, 2012, the Commissioners' Court of Galveston County, Texas convened in a regular meeting with the following members thereof present

Mark Henry, County Judge
Patrick F Doyle, Commissioner, Precinct No 1
Kevin O'Brien, Commissioner, Precinct No 2
Stephen Holmes, Commissioner, Precinct No 3
Ken Clark, Commissioner, Precinct No 4 and
Dwight D Sullivan, County Clerk

when the following proceedings, among others were had to-wit

Upon recommendation being received by the County Auditor, it is ordered that the County Clerk enter this Order in the minutes of the Commissioners' Court approving the payments of the monthly Health Insurance claims of GALVESTON COUNTY, GALVESTON COUNTY HEALTH DISTRICT, AND GALVESTON COUNTY ROAD DISTRICT NO 1 made by Boon Chapman for the month ending May 31, 2012 the gross amount of such payment being $873,438 01

UPON MOTION OF THE COUNTY ~~COMMISSIONER~~ JUDGE HENRY AND SECONDED BY COMMISSIONER O'BRIEN the above order was passed this 21ST DAY OF AUGUST, 2012 with 5 votes cast in favor thereof and 0 votes cast against

County of Galveston, Texas

Mark Henry, County Judge

ATTEST:

Dwight D Sullivan
County Clerk
By: Brandy Chapman Deputy
Brandy Chapman

RECOMMENDED

Cliff Billingsley,CPA
County Auditor

AUDITOR'S OFFICE - ACCOUNTING DIVISION
BOON CHAPMAN - MNB3010008898
GALVESTON COUNTY HEALTH PLAN
BANK RECONCILIATION (IFAS 6123-000000-1013056)
May 31, 2012

BALANCES PER THE BANK				
	BEGINNING BALANCE	*DEPOSITS*	*WITHDRAWALS*	*ENDING BALANCE*
BANK	$ 91,916 15	$ 873,482 71	$ 799,339 29	$ 166,059 57
DEPOSITS IN TRANSIT				
PRIOR MONTH CLAIMS FUNDING	-			-
CURRENT MONTH CLAIMS FUNDING		-		-
				-
OUTSTANDING CHECKS				
PRIOR MONTH **80,469.84**	(80,469 84)		(80,469 84)	-
CURRENT MONTH **154,508.56**			154,508 56	(154,508 56)
ADJUSTMENTS				
Duplicate Ck#13710 clrd, ck13598 duplicate	54 49			54 49
Amount Error Ck# 13671 clrd1/4/08 as 13674 for 54 49 sb 6 81	47 58			47 58
Ck #28408 cleared 12/8/08 for 7 11 sb 7 34	(0 23)			(0 23)
3/1/10 Ck41715 cleared for 7 81 s/h/bn 47 81 is OS	47 81			47 81
8/20/10 Ck47153 cleared as 47151&ck47153 is in OS list for original	1,100 80			1,100 80
Vpay for 5/23/12 was short			60 00	(60 00)
ADJUSTED BALANCES PER BANK	**$ 12,696.76**	**$ 873,482.71**	**$ 873,438.01**	**$ 12,741 46**

BALANCES PER THE IFAS				
	BEGINNING BALANCE	*RECEIPTS*	*DISBURSEMENTS*	*ENDING BALANCE*
IFAS	$ 12,230 21	$ 873,438 01	$ 873,438 01	$ 12,230 21
ADJUSTMENTS:				
1/17/12 Vpay credit	173 54			173 54
1/17/12 Vpay credit	173 54			173 54
INTEREST·				-
Jan- 12	30 35			30 35
Feb-12	21 01			21 01
March-12	29 45			29 45
April-12	38 66			38 66
May-12		44 70		44 70
ADJUSTED BALANCES PER BOOK	**$ 12,696 76**	**$ 873,482.71**	**$ 873,438.01**	**$ 12,741 46**

AGENDA ITEM #1e4

ORDER

On this 21st day of August, 2012, the Commissioners' Court of Galveston County, Texas convened in a regular meeting with the following members thereof present

Mark Henry, County Judge
Patrick F Doyle, Commissioner, Precinct No 1
Kevin O'Brien, Commissioner, Precinct No 2
Stephen Holmes, Commissioner, Precinct No. 3
Ken Clark, Commissioner, Precinct No 4 and
Dwight D Sullivan, County Clerk

when the following proceedings, among others were had to-wit·

Upon recommendation being received by the County Auditor, it is ordered that the County Clerk enter this Order in the minutes of the Commissioners' Court approving the payments of the monthly Health Insurance claims of GALVESTON COUNTY, GALVESTON COUNTY HEALTH DISTRICT, AND GALVESTON COUNTY ROAD DISTRICT NO 1 made by Boon Chapman for the month ending JUNE 31, 2012 the gross amount of such payment being $275,286.18.

UPON MOTION OF THE COUNTY ~~COMMISSIONER~~ JUDGE HENRY AND SECONDED BY COMMISSIONER O'BRIEN the above order was passed this 21ST DAY OF AUGUST, 2012 with 5 votes cast in favor thereof and 0 votes cast against

County of Galveston, Texas

Mark Henry, County Judge

ATTEST:

Dwight D. Sullivan
County Clerk
By: Brandy Chapman Deputy
Brandy Chapman

RECOMMENDED:

Cliff Billingsley,CPA
County Auditor

AUDITOR'S OFFICE - ACCOUNTING DIVISION
BOON CHAPMAN - MNB3010008898
GALVESTON COUNTY HEALTH PLAN
BANK RECONCILIATION (IFAS 6123-000000-1013056)
June 30, 2012

BALANCES PER THE BANK	BEGINNING BALANCE	DEPOSITS	WITHDRAWALS	ENDING BALANCE
BANK	$ 166,059 57	$ 275,511 89	$ 126,493.15	$ 315,078 31
DEPOSITS IN TRANSIT				
PRIOR MONTH CLAIMS FUNDING	-			-
CURRENT MONTH CLAIMS FUNDING		-		-
OUTSTANDING CHECKS				
PRIOR MONTH **154,508.56**	(154,508 56)		(154,508 56)	-
CURRENT MONTH **302,152.98**			302,152 98	(302,152 98)
ADJUSTMENTS				
Duplicate Ck#13710 clrd; ck13598 duplicate	54 49			54 49
Amount Error Ck# 13671 clrd1/4/08 as 13674 for 54 49 sb 6 81	47 58			47 58
Ck #28408 cleared 12/8/08 for 7 11 sb 7 34	(0 23)			(0 23)
3/1/10 Ck41715 cleared for 7 81 s/h/bn 47 81 is OS	47 81		47 81	-
8/20/10 Ck47153 cleared as 47151&ck47153 is in OS list for original	1,100 80		1,100 80	-
Vpay for 5/23/12 was short	(60 00)			(60 00)
Vpay for 6/7/12 ??		(40 00)		(40 00)
Vpay for 6/7/12 ??		(115 00)		(115 00)
ADJUSTED BALANCES PER BANK	**$ 12,741.46**	**$ 275,356.89**	**$ 275,286.18**	**$ 12,812.17**

BALANCES PER THE IFAS	BEGINNING BALANCE	RECEIPTS	DISBURSEMENTS	ENDING BALANCE
IFAS	$ 12,230 21	$ 275,286 18	$ 275,286 18	$ 12,230 21
ADJUSTMENTS:				
1/17/12 Vpay credit	173 54			173 54
1/17/12 Vpay credit	173 54			173.54
INTEREST:				-
Jan- 12	30 35			30 35
Feb-12	21 01			21 01
March-12	29 45			29.45
April-12	38 66			38 66
May-12	44 70			44 70
		70 71		70 71
ADJUSTED BALANCES PER BOOK	**$ 12,741.46**	**$ 275,356.89**	**$ 275,286.18**	**$ 12,812.17**

AGENDA ITEM #2

COUNTY of GALVESTON
HUMAN RESOURCES
Jan Piveral, SPHR
Human Resources Director

August 14, 2012

To Patricia Grady

From Jan Piveral, SPHR

Re Commissioners' Court Agenda Item-Summary of Bi-Weekly Personnel Movements

Please submit the following item for the August 21, 2012 Commissioners' Court Agenda

Receive and file Summary of Bi-Weekly Personnel Movements pay period #16, July 19- August 1, 2012 submitted by Human Resources

Off 409-770-5418 • Fax 409-770-5351
722 MOODY STREET • 3rd FLOOR • GALVESTON, TEXAS 77550

Summary of Bi-Weekly Personnel Movements

Pay Period #16 July 19 - August 1, 2012

	Positions	Current Appointments						Current Movements							Current Separations					
Department	Budgeted	FT	HT	PT	HR	Res	Total	Promo	Reclass	Reassign	Trans	Sal Adj	Demote	Total	Vol	Invol	Retire	Death	Other	Total
General Government	1 00						0							0						0
Facilities	20 0						0							0						0
Professional Services	6 0						0							0						0
Road District #1	4 0						0							0						0
County Judge	4 0						0							0						0
County Commissioners	8 0						0							0						0
Tax Office	51 0						0							0	1					1
County Auditor	33 0						0				1			1						0
County Clerk	43 0						0			1				1						0
County Clerk Records Mgmt	9 0						0							0						0
County Clerk Elections	5 0				2		2							0						0
Purchasing Agent	8 0						0							0						0
County Treasurer	7 0						0							0						0
Veterans Service	3 0						0							0						0
Human Resources	5 0						0							0						0
County Legal	6 0						0							0						0
Justice Administration	6 0						0	2						2						0
District Courts	19 0						0							0						0
County Courts	9 0						0							0						0
County Probate Court	6 0						0							0						0
Justice Courts	44 0						0							0						0
District Clerk	50 0	1			1		2							0	1					1
District Attorney/Jury & Trial	73 0	1					1							0	1					1
Pre-Trial Release	7 0						0							0						0
Sheriff	513 0	13					13	4						4	1					1
Constables	46 0						0							0						0
Social Services	12 0						0							0						0
Child Welfare	1 0						0							0						0
Senior Services	22 0						0							0						0
Emergency Management	6 0	1					1							0						0
Extension Services	9 0						0							0						0
County Engineer	7 0						0							0						0
Building Inspector	2 0						0							0						0
Community Services	3 0						0					3		3						0
Information Technology	51 0						0							0						0
County Parks	44 0				2		2							0	1	1				2
Beach Parks	2 0						0							0						0
Museum	2 0						0							0						0
Road & Bridge/Drainage/Beach	73 0						0							0	1	2				3
County Health District	9 0						0							0						0
Law Library	1 0						0							0						0
Juvenile Probation	68 0	3					3			3				3		1				1
Courthouse Security	4 0						0							0						0
Mosquito Control	13 0						0							0						0
Right of Way	1 0						0							0						0
Seawall Maintenance	6 0						0							0						0
Housing & Economic Dev	6 0						0							0						0
Adult Probation	45 0	2									1									
Grand Total	1373 0	19	0	0	5	0	24	6	0	4	1	3	0	14	6	4	0	0	0	10
Job Applications Received	158																			

Revised 10/11

Galv Cnty Production

Employee Pay Assignment Changes for Payroll Period 7/19/2012 thru 8/1/2012

Division	Division Name	Employee Name	Type	Position Number and Description	Begin	End	GrSt	Annual	Rate *	Reason
114000	County Clerk	MARCUS, AARON C	FTBE	26 SR MICROFILMING TECHNICIAN	7/27/2012		12A1	$30,065	1 156 38 B	REASSIGNMENT
114030	Election Expense	BRODIE, DIANE E	PTEL	500 ELECTION WORKER-TEMP	7/19/2012		0000	$10,400	10 00 H	APPOINTMENT
114030	Election Expense	SIMMONS TERRENCE S	PTEL	500 ELECTION WORKER-TEMP	7/19/2012		0000	$10,400	10 00 H	APPOINTMENT
121000	Justice Administration	DOWNS, DANIEL L	FTBE	6 CASE MANAGEMENT	7/19/2012		18A1	$40,435	1,555 20 B	PROMOTION
121000	Justice Administration	HENDERSON, KAREN K	FTBE	3 INDIGENT DEFENSE SERVICES	7/19/2012		14Q1	$49,266	1 894 87 B	PROMOTION
126100	District Clerk	SCOTT, POLLY H	FTBE	47 SR DEPUTY DISTRICT CLERK	7/30/2012		12A1	$30 065	1,156 38 B	APPOINTMENT
126100	District Clerk	TERRY, VERONICA	FTBE	520 COURT CLERK COORDINATOR	7/19/2012		14A1	$33,187	1,276 43 B	APPOINTMENT
126100	District Clerk	APFEL, DARRELL BLAKE	PTNE	523 COURT CLERK COORDINATOR		7/25/2012	14A1	$33,187	15 95 H	TERMINATION
127100	District Attorney	HOLMES JACQUELINE Y	FTBE	77 LEGAL SECRETARY	7/30/2012		12A1	$30,065	1,156 38 B	APPOINTMENT
127100	District Attorney	TURRENTINE, SHAWNA L	FTBE	77 LEGAL SECRETARY		7/25/2012	12A1	$30 065	1 156 38 B	TERMINATION
151300	County Auditor	DOLATO, MEGAN R	FTBE	53 SENIOR ACCOUNTS PAYABLE	7/19/2012		14A1	$33,187	1,276 43 B	TRANSFER
151500	Tax Assessor/Collector	CHITTENDEN HARRISON	FTBE	15 ADMINISTRATIVE CLERK		8/1/2012	09A1	$25,925	997 14 B	TERMINATION
211133	Corrections-Sheriff	BOAS IV, FRED	FTBE	207 DEPUTY II	7/25/2012		14G1	$38,487	1,480 27 B	CAREER LADDER
211133	Corrections-Sheriff	CROWELL, DAWN M	FTBE	192 DEPUTY II	7/27/2012		14G1	$38,487	1 480 27 B	CAREER LADDER
211133	Corrections-Sheriff	ELKINS, JAMES E	FTBE	75 DEPUTY II	7/21/2012		14G1	$38,487	1,480 27 B	CAREER LADDER
211133	Corrections-Sheriff	ESCOBEDO, JOSE L	FTBE	39 ENTRY LEVEL		7/22/2012	12D1	$32,377	1,245 30 B	TERMINATION
211133	Corrections-Sheriff	GONZALEZ, ALAN F	FTBE	46 ENTRY LEVEL	7/30/2012		12D1	$32,377	1,245 30 B	APPOINTMENT
211133	Corrections-Sheriff	HARKLESS, BRIAN J	FTBE	77 ENTRY LEVEL	7/30/2012		12D1	$32,377	1,245 30 B	APPOINTMENT
211133	Corrections-Sheriff	LEWIS, PATRICK D	FTBE	125 ENTRY LEVEL	7/30/2012		12D1	$32,377	1,245 30 B	APPOINTMENT
211133	Corrections-Sheriff	LOPEZ, MICHAEL	FTBE	103 ENTRY LEVEL	7/30/2012		12D1	$32 377	1,245 30 B	APPOINTMENT
211133	Corrections-Sheriff	LOVE JOSHUA D	FTBE	106 ENTRY LEVEL	7/30/2012		12D1	$32,377	1,245 30 B	APPOINTMENT
211133	Corrections-Sheriff	MILLER, MICHAEL F	FTBE	149 ENTRY LEVEL	7/23/2012		12D1	$32,377	1,245 30 B	APPOINTMENT
211133	Corrections-Sheriff	ORNELAS, JEREMY N	FTBE	116 CORRECTIONS-ENTRY	7/30/2012		12D1	$32 377	1,245 30 B	APPOINTMENT
211133	Corrections-Sheriff	PATINA JR CARLOS	FTBE	61 ENTRY LEVEL	7/30/2012		12D1	$32 377	1,245 30 B	APPOINTMENT
211133	Corrections-Sheriff	PATINA, ANDY	FTBE	60 ENTRY LEVEL	7/30/2012		12D1	$32,377	1,245 30 B	APPOINTMENT
211133	Corrections-Sheriff	PRIDE JACQUELINE F	FTBE	81 ENTRY LEVEL	7/30/2012		12D1	$32,377	1,245 30 B	APPOINTMENT
211133	Corrections-Sheriff	RYAN, PATRICK A	FTBE	144 ENTRY LEVEL	7/30/2012		12D1	$32 377	1 245 30 B	APPOINTMENT

* Rate Type H = Hourly B = Biweekly Salary

Galv Cnty Production

Employee Pay Assignment Changes for Payroll Period 7/19/2012 thru 8/1/2012

Division	Division Name	Employee Name	Type	Position Number and Description	Begin	End	GrSt	Annual	Rate *	Reason
211133	Corrections-Sheriff	VILLARREAL, JOSEPH A	FTBE	85 ENTRY LEVEL	7/30/2012		12D1	$32,377	1 245 30 B	APPOINTMENT
211133	Corrections-Sheriff	WOOD, JAN R	FTBE	49 ENTRY LEVEL	7/30/2012		12D1	$32,377	1 245 30 B	APPOINTMENT
211143	Patrol Division	TROCHESSET, LOUIS W	FTBE	108 SGT-MARINE OPERATIONS	7/23/2012		18M1	$54,381	2,091 58 B	PROMOTION
255100	Adult Probation	BAUM, JESSE	FTBE	32 PROBATION OFFICER	7/24/2012		0000	$33 499	1,288 46 B	APPOINTMENT
255100	Adult Probation	DICKSON, HAYLEY K	FTBE	17 PROBATION OFFICER	7/31/2012		0000	$33,499	1,288 46 B	TRANSFER
255100	Adult Probation	HURT, STEPHEN C	FTBE	23 PROBATION OFFICER	7/24/2012		0000	$33,499	1,288 46 B	APPOINTMENT
256110	State Aid Grant A	DENEFIELD, WARREN J	FTBE	466 JUVENILE SUPERVISION OFCR	7/19/2012		1200	$31 299	1,203 82 B	REASSIGNMENT
256110	State Aid Grant A	GREEN, KEITH	FTBE	465 JUVENILE SUPERVISION OFCR	7/19/2012		1200	$31,299	1 203 82 B	REASSIGNMENT
256118	Detention	BROWN, ROBERT T	FTBE	45 JUVENILE SUPERVISION OFCR	7/19/2012		1200	$31,299	1 203 82 B	REASSIGNMENT
256118	Detention	GUIDRY JR AVERY G	FTBE	24 JUVENILE PROBATION OFCR	7/19/2012		1600	$39,100	1,503 86 B	APPOINTMENT
256118	Detention	PRESLEY, TRAVIS P	FTBE	44 JUVENILE SUPERVISION OFCR		7/26/2012	1200	$31 299	1 203 82 B	TERMINATION
256119	Post Program	COLLINS DERRICK	FTBE	36 JUVENILE SUPERVISION OFCR	7/23/2012		1200	$31,299	1,203 82 B	APPOINTMENT
256119	Post Program	GALVAN, ALAN M	FTBE	40 JUVENILE SUPERVISION OFCR	7/23/2012		1200	$31,299	1,203 82 B	APPOINTMENT
291010	Emergency Management	WILLIAMSON JR,	FTBE	4 DEP EMC/OPERATIONS SECTION	7/30/2012		22E1	$60,026	2 308 71 B	APPOINTMENT
296100	Flood Control	JOHNSON SR, RONNIE L	FTBE	15 HEAVY EQUIPMENT OPER III		7/20/2012	12C1	$31,587	1,214 92 B	TERMINATION
312120	F M Lateral Road	BENAVIDEZ, VITO	FTBE	47 MECHANIC I		7/20/2012	12A1	$30,065	1,156 38 B	TERMINATION
312120	F M Lateral Road	DELGADO, LORENZO A	FTBE	66 HEAVY EQUIPMENT OPERATOR		7/20/2012	10A1	$27,238	1,047 62 B	TERMINATION
312120	F M Lateral Road	SALAZAR, JUAN	FTBE	7 MECHANIC I		7/26/2012	12A1	$30 065	1,156 38 B	TERMINATION
440100	Community Service	LEBOEUF, JOANNIE M	FTBE	4 SOCIAL SERVICES/INDIG	7/24/2012		20G1	$51,760	1,990 79 B	REORGANIZATION
440100	Community Service	NICHOLSON CONNIE A	FTBE	1 COMMUNITY SERVICES	7/24/2012		26A1	$80,728	3,104 96 B	REORGANIZATION
443100	Indigent Care and Med	EDWARDS, TASHONDA R	FTBE	13 INDIGENT BURIAL	7/24/2012		14E1	$36,632	1 408 94 B	REORGANIZATION
522020	Parks Division	AGRUSO JR, MICHAEL R	FTBE	18 MECHANIC II		7/20/2012	14A1	$33,187	1,276 43 B	TERMINATION
522020	Parks Division	REYES SR, SIMON E	FTBE	30 PARKS MAINTENANCE WORKER		7/23/2012	08A1	$24,676	949 10 B	TERMINATION
522020	Parks Division	PRANGE, JEFFREY M	PTNH	504 PARK AIDE SEASONAL	7/30/2012		02C1	$9 640	9 27 H	APPOINTMENT

* Rate Type H = Hourly, B = Biweekly Salary

Galv Cnty Production

Employee Pay Assignment Changes for Payroll Period 7/19/2012 thru 8/1/2012

Division	Division Name	Employee Name	Type	Position Number and Description	Begin	End	Grst	Annual	Rate *	Reason
522020	Parks Division	STONUM, WILLIAM A	PTNH	503 PARK AIDE SEASONAL	7/30/2012		02C1	$9 640	9 27 H	APPOINTMENT

* Rate Type H = Hourly, B = Biweekly Salary

AGENDA ITEM #3

STACY WHITEHURST
VICE PRESIDENT OF REGULATORY AFFAIRS

577 N Garden Ridge Blvd
Lewisville, TX 75067-2691

RECEIVED
AUG 06 2012
GALVESTON COUNTY JUDGE

July 30, 2012

Honorable Judge Mark Henry
722 Moody
Galveston, Texas 77550
Galveston County

Honorable Judge Henry

As required in House Bill 3059, Section 366 005, Texas-New Mexico Power Company is providing new utility service connections for counties you represent

Any questions please contact Sara Walters at 469-484-8587

Sincerely,

Stacy R Whitehurst

SRW/sw
Enclosure

cc Sara Walters

Texas New Mexico Power Company
New Premise Turn-Ons
577 N Garden Ridge Blvd
Lewisville, Texas 75067
Phone 972-420-4189

County GALVESTON

Service Address	City/State/Zip	Established Date	Prem Code
1811 STERLING CREEK DR	FRIENDSWOOD TX 77546	26-JUL-2012	564223
1821 STERLING CREEK DR	FRIENDSWOOD TX 77546	26-JUL-2012	564219
1807 STERLING CREEK DR	FRIENDSWOOD TX 77546	26-JUL-2012	564225
1805 STERLING CREEK DR	FRIENDSWOOD TX 77546	26-JUL-2012	564226
1803 STERLING CREEK DR	FRIENDSWOOD TX 77546	26-JUL-2012	564227
1804 STERLING CREEK DR	FRIENDSWOOD TX 77546	26-JUL-2012	564228
1806 STERLING CREEK DR	FRIENDSWOOD TX 77546	26-JUL-2012	564229
1808 STERLING CREEK DR	FRIENDSWOOD TX 77546	26-JUL-2012	564230
1810 STERLING CREEK DR	FRIENDSWOOD TX 77546	26-JUL-2012	564231
1812 STERLING CREEK DR	FRIENDSWOOD TX 77546	26-JUL-2012	564232
1814 STERLING CREEK DR	FRIENDSWOOD TX 77546	26-JUL-2012	564233
1816 STERLING CREEK DR	FRIENDSWOOD TX 77546	26-JUL-2012	564234
1818 STERLING CREEK DR	FRIENDSWOOD TX 77546	26-JUL-2012	564235
1820 STERLING CREEK DR	FRIENDSWOOD TX 77546	26-JUL-2012	564236
1708 WATERS EDGE DR	FRIENDSWOOD TX 77546	26-JUL-2012	564237
1706 WATERS EDGE DR	FRIENDSWOOD TX 77546	26-JUL-2012	564238
1704 WATERS EDGE DR	FRIENDSWOOD TX 77546	26-JUL-2012	564239
1702 WATERS EDGE DR	FRIENDSWOOD TX 77546	26-JUL-2012	564240
1700 WATERS EDGE DR	FRIENDSWOOD TX 77546	26-JUL-2012	564241
1701 BENDING STREAM DR	FRIENDSWOOD TX 77546	26-JUL-2012	564242
1703 BENDING STREAM DR	FRIENDSWOOD TX 77546	26-JUL-2012	564243
1705 BENDING STREAM DR	FRIENDSWOOD TX 77546	26-JUL-2012	564244
1707 BENDING STREAM DR	FRIENDSWOOD TX 77546	26-JUL-2012	564245
1800 EAGLE CREEK DR	FRIENDSWOOD TX 77546	26-JUL-2012	564246
1802 EAGLE CREEK DR	FRIENDSWOOD TX 77546	26-JUL-2012	564247
1804 EAGLE CREEK DR	FRIENDSWOOD TX 77546	26-JUL-2012	564248
1806 EAGLE CREEK DR	FRIENDSWOOD TX 77546	26-JUL-2012	564249
1808 EAGLE CREEK DR	FRIENDSWOOD TX 77546	26-JUL-2012	564250

Texas New Mexico Power Company
New Premise Turn-Ons
577 N Garden Ridge Blvd
Lewisville, Texas 75067
Phone 972-420-4189

County GALVESTON

Service Address	City/State/Zip	Established Date	Prem Code
1810 EAGLE CREEK DR	FRIENDSWOOD TX 77546	26-JUL-2012	564251
1812 EAGLE CREEK DR	FRIENDSWOOD TX 77546	26-JUL-2012	564252
1814 EAGLE CREEK DR	FRIENDSWOOD TX 77546	26-JUL-2012	564253
1816 EAGLE CREEK DR	FRIENDSWOOD TX 77546	26-JUL-2012	564254
1818 EAGLE CREEK DR	FRIENDSWOOD TX 77546	26-JUL-2012	564255
1820 EAGLE CREEK DR	FRIENDSWOOD TX 77546	26-JUL-2012	564256
1819 EAGLE CREEK DR	FRIENDSWOOD TX 77546	26-JUL-2012	564257
1817 EAGLE CREEK DR	FRIENDSWOOD TX 77546	26-JUL-2012	564258
1815 EAGLE CREEK DR	FRIENDSWOOD TX 77546	26-JUL-2012	564259
1813 EAGLE CREEK DR	FRIENDSWOOD TX 77546	26-JUL-2012	564260
1811 EAGLE CREEK DR	FRIENDSWOOD TX 77546	26-JUL-2012	564261
1809 EAGLE CREEK DR	FRIENDSWOOD TX 77546	26-JUL-2012	564262
1807 EAGLE CREEK DR	FRIENDSWOOD TX 77546	26-JUL-2012	564263
1805 EAGLE CREEK DR	FRIENDSWOOD TX 77546	26-JUL-2012	564264
1813 STERLING CREEK DR	FRIENDSWOOD TX 77546	26-JUL-2012	564222
1817 STERLING CREEK DR	FRIENDSWOOD TX 77546	26-JUL-2012	564221
1819 STERLING CREEK DR	FRIENDSWOOD TX 77546	26-JUL-2012	564220
1809 STERLING CREEK DR	FRIENDSWOOD TX 77546	26-JUL-2012	564224
1803 EAGLE CREEK DR	FRIENDSWOOD TX 77546	26-JUL-2012	564265

AGENDA ITEM #4

THE COUNTY OF GALVESTON

RUFUS G. CROWDER, CPPO, CPPB
PURCHASING AGENT

COUNTY COURTHOUSE
722 Moody (21st Street)
Fifth (5th) Floor
GALVESTON, TEXAS 77550
(409) 770-5371

GWEN MCLAREN, CPPB
ASST PURCHASING AGENT

August 13, 2012

Honorable County Judge
And Commissioners' Court
County Courthouse
Galveston, Texas

Re: Disposal of Salvage or Surplus Property

Gentlemen,

It is requested that authorization be granted to dispose of the salvage and/or surplus property items represented as shown below and on the attached Fixed Asset Awaiting Disposal Listing The request is per the instructions outlined in the Texas Local Government code, section 263 152, Disposition

- Law Books
- Pallet of Miscellaneous Small Engine Parts
- 60 inch John Deer Broom Attachment
- JCB Cleanout Bucket
- Pallet of Skid Steer Tracks
- Lift Gate for Pick-up Truck

Your consideration in this matter will be greatly appreciated

Respectfully submitted,

Rufus G Crowder, CPPO, CPPB
Purchasing Agent
County of Galveston County

GALVESTON COUNTY TEXAS

FIXED ASSET AWAITING DISPOSAL LISTING

FAID	Dept	Description	Year	Make	Model	VIN/Serial
903	172111	VAN	1998	FORD	WINDSTAR	2FMZA51U1WBE19321
26956	172111	PICKUP TRUCK	2003	DODGE	QUAD 1500	1D7HA18D13S240556
29233	172111	SUV	2006	FORD	EXPEDITION 4WD	1FMPU16536LA64130
29267	172111	4 DOOR SEDAN	2006	FORD	CROWN VIC	2FAFP71W16X144139
31634	211127	4 DOOR SEDAN	2000	TOYOTA	CAMRY	JT2BG22K7Y0419899

Record Count 5

AGENDA ITEM #5

THE COUNTY OF GALVESTON

RUFUS CROWDER, CPPO CPPB
PURCHASING AGENT

COUNTY COURTHOUSE
722 Moody (21st Street)
Fifth (5th) Floor
GALVESTON, TEXAS 77550
(409) 770-5371

GWEN MCLAREN, CPPB
ASST PURCHASING AGENT

August 14, 2012

Honorable County Judge
And Commissioners' Court
County Courthouse
Galveston, Texas

Re: Purchasing Department Certification Recognition

Gentlemen,

Galveston County has aligned itself with the National Institute of Governmental Purchasing (NIGP) to provide the educational and technical tools its members need to consistently perform as professionals and individual's ongoing commitment and adherence to best practices, ethical values, and public service In addition, the Universal Public Procurement Certification Council (UPPCC) is utilized in an effort to measure professional competence and the understanding of the body of knowledge surrounding public procurement through testing and certification

The Universal Public Procurement Certification Council (UPPCC) provides examinations to measure professional competence and the understanding of the body of knowledge surrounding public procurement

Certified individuals are issued a certificate attesting that they have met the standards of the credentialing organization and are entitled to make the public aware of their credentialed status, through the use of the certification initials after their name and in all forms of address The UPPCC offers the Certified Professional Public Buyer (CPPB) and Certified Public Procurement Officer (CPPO) designations

Obtaining a Certified Professional Public Buyer (CPPB) and/or Certified Public Procurement Officer (CPPO) designation demonstrates a standard of competency in the public procurement profession A CPPB and CPPO designation indicates to the public that, having mastered a body of knowledge, those that achieve certification can make sound decisions that reflect maximum value for the taxpayer's dollar

Denise Guess, Contract Administrator, was notified by the UPPCC that she has earned recognition from the UPPCC by receiving the Certified Professional Public Buyer (CPPB) credential Denise was among 150 professionals who successfully completed the CPPB examination held May 2-14, 2011

Rufus Crowder Purchasing Agent, was notified by the UPPCC that he has earned recognition from the UPPCC by receiving the Certified Public Procurement Officer (CPPO) credential and was among 57 professionals who successfully completed the CPPO examination held May 7-19, 2012

In closing, I would like to thank the Galveston County Commissioners' Court for support in providing education in the public procurement profession

Respectfully submitted,

Rufus G Crowder, CPPO, CPPB
Purchasing Agent
County of Galveston

Attachments

cc Galveston County Purchasing Board

AGENDA ITEM #5a

UPPCC

Universal Public Procurement Certification Council

July 3, 2012

Mr Rufus G. Crowder, CPPO, CPPB
3219 Coral Ridge Dr
League City TX 77573

Dear Mr Crowder

Based on your fulfillment of the necessary application requirements and your performance on the May 2012 examination, the Universal Public Procurement Certification Council (UPPCC) has conferred upon you the designation of CPPO Congratulations!

This letter is official notification that you may now use the designation on letterhead, business cards and all forms of correspondence. As a standard rule, capitalized letters must be used and periods are never used to abbreviate the certification

Enclosed is a sample press release for your distribution The UPPCC will publish a press release announcing the new May 2012 class and your name will appear in the listing of "Current Certificants" on the UPPCC website The "Current Certificants" listing is a public searchable directory of all current CPPOs and CPPBs The UPPCC website and database will not be updated with your certified status until the public announcement is made

To further highlight your achievement, the UPPCC will send a letter to your immediate supervisor or to the individual you indicated when you took your exam. If you did not provide a name and address of an individual on exam day and would like to request a letter of announcement, please notify the UPPCC staff by email at certification@uppcc.org.

In the coming weeks, you will receive a certificate and lapel pin commemorating your accomplishment Your name will be printed as follows Rufus G Crowder If you prefer to have your name appear differently, please advise the UPPCC staff by email at certification@uppcc org

Your designation is effective for the five (5) year period of May 7, 2012 through May 7, 2017 Prior to the end of the certification period, certificants are required to recertify in order to maintain the certification For full details on the recertification process and current requirements please see http //www uppcc org/current-certificants/recertification aspx

Again, congratulations on becoming a CPPO! If you have any questions, please feel free to contact the UPPCC Certification Coordinator at 800-367-6447 ext 236 or by email at certification@uppcc org

Sincerely,

Ann Peshoff, CAE, CMP
Director, UPPCC

Norma J. Hall, FNIGP, CPPO, CPPB
Norma J Hall, FNIGP, CPPO, CPPB, CPM
Chair, UPPCC Governing Board

Enclosure

151 Spring Street • Herndon, VA 20170-5223 • T 703 736.8900 • F 703 796 9611 • certification@uppcc org • www uppcc org

AGENDA ITEM #5b

UPPCC

Universal Public Procurement Certification Council

June 24, 2011

Ms Denise Guess, CPPB
2114 Irene Street
LaMarque TX 77568

Dear Ms Guess

Based on your fulfillment of the necessary application requirements and your performance on the May 2011 examination the Universal Public Procurement Certification Council (UPPCC) has conferred upon you the designation of Certified Professional Public Buyer (CPPB). Congratulations!

This letter is official notification that you may now use the designation on letterhead, business cards and all forms of correspondence. As a standard rule, capitalized letters must be used and periods are never used to abbreviate the certification

Enclosed is a sample press release for your distribution The UPPCC will publish a press release announcing the new May 2011 class and your name will appear in the listing of "Current Certificants" on the UPPCC web site The "Current Certificants" listing is a public searchable directory of all current CPPOs and CPPBs. The UPPCC web site and database will not be updated with your certified status until the public announcement is made

To further highlight your achievement, the UPPCC will send a letter to your immediate supervisor or to the individual you provided when you took your exam. If you did not indicate anyone's name on exam day and would like to request a letter of announcement, please notify the UPPCC staff by email at certification@uppcc org.

In the coming weeks, you will receive a certificate and lapel pin commemorating your accomplishment. Your name will be printed as follows. Denise Guess If you prefer to have your name appear differently, please advise the UPPCC staff by email at certification@uppcc org.

Your CPPB designation is effective for the five (5) year period of May 2, 2011 through May 2, 2016 Prior to the end of the certification period, certificants are required to recertify in order to maintain the certification. For full details on the recertification process and current requirements please see http //www uppcc org/current-certificants/recertification aspx.

Again, congratulations on becoming a CPPB! If you have any questions, please feel free to contact the UPPCC Certification Coordinator at 800-367-6447 ext 236 or by email at certification@uppcc org

Sincerely,

Ann Peshoff, CAE, CMP
Director, UPPCC

Norma J. Hall, FNIGP, CPPO, CPPB
Chair, UPPCC Governing Board

Enclosure

151 Spring Street • Herndon, VA 20170-5223 • T 703-736-8900 • F 703-736-9611

AGENDA ITEM #6a

Bayview Municipal Utility District

309 Miles
Bacliff, TX 77518
Phone - 281-339-1959
FAX - 281-339-3083

Leonard Loukanis, President
Billy Woolsey, Vice-President

Troy Bradfield, Secretary
Linda Elliott, Director
Janifer Heinze, Director

August 2, 2012

Dwight Sullivan, County Clerk
Attn: William Sargent, Chief Deputy Clerk
for Elections
Galveston County Judice Center
600 59th Street, Suite 2001
Galveston, TX 77551-4180

Re Contract for Election Services
Copy of Order Calling Election

Mr. Sargent.

Enclosed please find the contract for Election Services between Galveston County and Bayview Municipal Utility District. Please return a signed copy of the contract to me as soon as it is executed.

Also, included is a copy of the Order Calling Supervisors Election and Secretary's Certificate for your records

Please let me know if there is anything else that is needed.

Sincerely,

Elaine Potter

Elaine Potter
Office Manager
Bayview MUD

encl

Contract for Election Services

[Joint Elections - November Even Numbered Years]

This Contract is made and entered into this 26th day of July, 2012 by and between Hon Dwight D. Sullivan, County Clerk and County Election Officer for Galveston County("Contracting Officer") and Leonard Loukanis on behalf of Bayview M U D ("Contracting Authority").

This Contract is being entered into pursuant to Texas Election Code, Chapter 31, Subchapter D for the purpose of ensuring that the Contracting Officer and the Contracting Authority understand the tasks each is to perform in connection with the following election and any subsequent runoff election, to-wit:
Purpose of Election. Board of Directors Election

NOVEMBER 6, 2012
Election Date

DECEMBER 15, 2012
Runoff Election Date

1. Duties and Services of the Contracting Officer.
The Contracting Officer shall be responsible for performing the following duties and furnishing the following services and equipment in connection with the election and any subsequent runoff election

1 1 Program, or arrange to have programmed, the ballot
[Cost Based upon the number of contests on the ballot See attached Fee Schedule]

1.2 Arrange to have published the legal notices of the testing of the electronic tabulating equipment as provided in Texas Election Code §127.096 and conduct all required tests of the electronic tabulating equipment under Texas Election Code §§127 096-127 098 and §§ 129 021-129.023 The first test shall be conducted at least five days prior to the election In addition, it will be performed during normal business hours and be open to the public. The Contracting Officer proposes conducting the first text no later than **Thursday, September 20, 2012**
[Cost The cost for publishing the notice will be split equally between all the parties involved with said joint election See attached Fee Schedule]

1 3 Provide technical and equipment support for the voting machines and equipment being provided to the Contracting Authority In the event there is a failure of a voting machine the Contracting Officer shall try to remedy the problem over the phone If he is unable so to do he will dispatch to locations within Galveston County the appropriate technical support personnel and equipment to correct the failure
[Cost Included in the 10% election fee]

1 4 On behalf of the Contracting Authority, obtain voter registration lists from the Voter Registrar to be used during Early Voting and on Election Day Since this is a joint countywide vote center election with the county of Galveston all partners to this agreement shall use electronic poll books
[See Section 2 3 below]

For additional Duties of the Contacting Officer see the table below

2. Duties and Services of the Contracting Authority.
The Contracting Authority will be responsible for performing the duties and services set forth in this section.

2 1 Prepare and submit all required submissions to the U S Department of Justice under the Federal Voting Rights Act of 1965 for its election and runoff election

2 2 Publish notices of the election in accordance with Section 4.003(a) of the Texas Election Code.

2 3 Provide the Contracting Officer with the Contracting Authority's requirements for voter registration lists and poll books for Early Voting and Election Day [See section 1 4 above]

2 4 In accordance with Texas Election Code §85 005 establish uniform voting days and hours that conform to the dates and times the County of Galveston is conducting its general election. The Texas Election Code §85.005 (d) requires cities to have at least two days of early voting at the main early voting location for 12 hours each day The Contracting Authority will work with the Contracting Officer and other jurisdictions holding a joint election with the County in order to ensure uniform election hours county-wide.

2.5 In accordance with Texas Election Code §4.008 as amended, deliver written notice of the election to the Contracting Officer no later than 71 days prior to the Election Day **[August 27, 2012]**.

2 6 If the Contracting Authority desires to have an additional polling location(s) to those selected by the Contracting Officer for the General Election, the Contracting Authority will submit a list of said locations to the Contracting Officer no later than **August 1, 2012** Upon notification by the Contracting Authority, the Contracting Officer shall conduct a site inspection of the location to ensure that they comply with Americans with Disabilities Act (ADA) accessibility requirements and that they also have adequate Verizon MiFi Internet access By **September 4, 2012**, the Contracting Officer will share with the Contracting Authority the results of the site inspection and inform same of any adjustments that may be required in order to utilize the location(s) selected by the Contracting Authority [See section 2 16 below]

In the event that polling locations within the Contracting Authority's jurisdiction are moved, it will be the responsibility of the Contracting Authority to comply with §43 062 of the Texas Election Code that requires voters be notified of the new location by placing a notice at the old polling location telling the voters of the nearest new polling location.

2 7 Provide to the Contracting Officer the language for any ballot propositions, the names of election contests, the names of candidates as they are to appear on the ballot, a copy of a sample ballot, ballot draw information and a completed "Requirements to Program the Ballot" form These materials will be provided in an electronic form to the Contracting Officer by **no later than August 27, 2012.** All language on the ballot must be provided in both English and Spanish

2 8 Return to the Contracting Officer, by **5 p.m. on SEPTEMBER 18, 2012**, confirmation that the sample ballots the Contracting Officer has prepared and provided to the Contracting Authority are satisfactory or provide changes that need to be made

2 9 The Contracting Officer will be conducting elections for numerous Contracting Authorities on the same day. This will be a joint countywide vote center election which allows a prospective voter the ability to vote at any of the County's election day polling places The parties understand that each election has its own challenges and requirement and that failure to provide the information in paragraphs 2 5, 2 6, 2.7 and 2 8 by the above dates will place an undue burden on the Contracting Officer that may prevent him from being able to provide his services to the Contracting Authority in a timely and accurate manner **Should the Contracting Authority miss said deadlines, and should the Contracting Officer be unable to provide his services in a timely and accurate manner the Contracting Authority shall hold the Contracting Officer and his employees harmless from any election errors and corresponding liability and/or damages that may result, including but not limited to the costs incurred related to an election contest and/or the need to conduct a subsequent election.**

2.10 As required by § 67.017 (b) and the Secretary of State's Office, make an electronic precinct-by-precinct report to the Secretary of State's Office by no later than the 30th day after Election Day

2.11 Unless otherwise stipulated, transport, or have its Presiding Election Judges transport on its behalf, the voting machines and equipment to the Contracting Authority's Early Voting and Election Day voting locations

2 12 Supervise, with the assistance of the Contracting Officer, the overall conduct of its election in Contracting Authority's jurisdiction including the supervision tabulation of results.

2 13 Since this will be a countywide vote center election in which numerous entities will be involved, the Contracting Authority may appoint one person to serve on the Signature Verification Committee/Early Voting Ballot Board The same person, or another representative, may also be appointed to serve on the Ballot Resolution Board If the Contracting Authority makes such an appointment(s) they shall provide the Contracting Officer with contact information for each of these individuals in writing by no later than Friday, **October 12, 2012**. [See http //www galvestonvotes org/Resources/WhatHappensElectionDay html for a summary of the duties of the various boards]

2 14 Pay a $100 fee per Early Voting and Election Day polling location within its jurisdiction to cover a portion of the Contracting Officer's costs for hiring two election judges to provide the Contracting Authority and its Judges election support services throughout the term of this Contract

In addition, the contracting Authority will split equally with the Contracting Officer all the other costs for each Early Voting and Election Day polling place located within its jurisdiction If the Contracting Authority desires to have an additional polling location located within its jurisdiction, they will be charged the $100 fee noted above and 100% of the costs associated with the additional polling location(s) (e.g , equipment, election kit, poll worker costs, etc)

2 15 Pursuant to the provisions of the Help America Vote Act of 2002 [HAVA], provide the appropriate number of bilingual poll workers as determined by guidance provided by the U S Department of Justice If the Contracting Authority is appointing personnel to staff a polling location, the Contracting Authority may not impose this duty on

Contracting Officer. But, the Contracting Officer will attempt to assist Contracting Authority in finding bilingual poll workers

2 16 All polling locations used during this election cycle shall comply with the Americans with Disabilities (ADA) accessibility requirements If there is a shortage of ADA compliant voting locations, remedies shall be found to allow handicapped/disabled persons to cast their vote In addition, since it is critical to record in real time those people who have cast their ballots, Internet access for the electronic poll books is required All the polling locations must be accessible to the Internet through our Verizon MiFi units ADA compliance and Internet connectivity shall be verified by the Contracting Officer prior to any new voting location being added to the list of polling places

Special Provision: Bilingual Poll Worker Requirements. Galveston County was a party in Civil Action No. 3 07 CV 377 styled "The United States of America, Plaintiff, v. Galveston County, Texas, Defendant in the United States District Court for the Southern District of Texas, Galveston Division" It entered into a Consent Decree that acknowledged it is covered under both Section 4(f)(4) of the Voting Rights Act as amended and 42 U S C. §1973(b)(4)(Section 4(f)(4) to provide Spanish language written materials and assistance to voters. Galveston also has an obligation to ensure that its polling places and poll workers comply with the Help America Vote Act of 2002 ("HAVA"), 42 U.S C §§15301 et seq Although this Consent Decree expired December 31, 2010, Galveston County agreed that it is permanently enjoined from·

a) Failing to provide in Spanish "any registration or voting notices, forms, instructions, assistance, or other materials or information relating to the electoral process, including ballots", that they provide in English as required by Section 4(f)(4) of the Voting Rights Act, 43U.S C.S1973b(f)(4), and

b) Failing to ensure that poll workers provide and receive adequate training regarding (1) the use of providing provisional ballots under Section 302(a) of HAVA, and (2) the display of all HAVA-required signs under Section 302(b) of HAVA

Contracting Authority understands that regardless of whether it desires to engage the Contracting Officer's services, it likewise has an obligation to comply fully with the same terms and provisions of the Voting Rights Act and the Help America Vote Act.

Cancellation of Contract: Contracting Authority may cancel this Contract without incurring any expenses by notifying Contracting Officer by email or other written form of its intention to so cancel by no later than forty-eight (48) hours after its candidates filing deadline Should Contracting Authority desire to cancel this Contract after that time it may do so upon twenty-four (24) hours written notice to Contracting Officer but the Contracting Authority will be obligated to pay Contracting Officer the greater of a fee of $500 or the cost of services and equipment rendered up through the date of cancellation

Selection of Services:

The Contracting Authority hereby selects the following services that it wants the Contracting Officer to provide and those services for which the Contracting Authority shall be responsible. The Contracting Officer will affirm his willingness to perform the services requested by the Contracting Authority by signing this agreement
[Some of the choices have been preselected because they are required in this Joint Countywide Vote Center Election]

Contracting Authority to Perform	**Contracting Officer to perform**	**Service**
☐	☒	Procure and distribute to the Election Judges all necessary election supplies, including but not limited to sample ballots, election kits, and office supplies such as paperclips, and pens Each kit and unused election supplies are to be returned by the Contracting Authority to the Contracting Officer after the voting polls close on Election Night [**Cost:** $50 per kit - *To be split 50/50 for those polling locations the Contracting Officer selected within an entity's jurisdiction]*
☐	☒	Arrange for receiving and checking in the supplies and equipment being returned by the Election Judges after the voting polls close on Election Night [**Cost:** Overtime for staff and part time workers hired to provide this service will be evenly split between ALL the entities participating in this joint election]
☐	☒	Procure all necessary voting machines and equipment for use at early voting and election day locations and prepare them for use [**Cost:** $250 per eSlate or JBC and $300 per DAU eSlate - *To be split 50/50 for those polling locations the Contracting Officer selected within an entity's jurisdiction]*]
☐	☐	Transport, or arrange to have transported, the voting machines and equipment to and from the early voting locations [**Cost:** $100 delivery per location].
☐	☒	Arrange for programming of the ballot and the Logic and Accuracy Testing of the counting equipment [**Cost:** Determined by the number of contests on the entity's ballot *[not the entire combined ballot]* $550 for up to ten contests, $1,100 for up to 20, $1,650 for up to 30, $2,450 for up to 40 and $3,000 for 41 or more contests]

Contracting Authority to Perform	Contracting Officer to perform	Service
☐	☒	Arrange for the use of a central counting station and for the tabulating and supervisory personnel and equipment needed at the counting station Prepare the testing materials for the tabulation of the ballots to be used with electronic tallying equipment Prepare the unofficial tabulation of precinct results on Election Night [**Cost:** $350 for use of the equipment plus overtime for county employees doing the tabulation (est max $350) These costs are to be shared evenly between all the parties that participate in this joint countywide vote center election]
☐	☒	Assist the Contracting Authority in the general overall supervision of the election and any subsequent runoff election and provide advisory services in connection with the decisions to be made and the actions taken by the Contracting Authority who is the convening authority for the election/runoff election [**Cost:** Included in the 10% election fee]
☐	☒	Conduct Early Voting, Election Day Voting, and bilingual training with at least two Election Day training sessions being offered during the evening hours beginning at 5 30 p m [**Cost:** $25 per trainee attending the four hour sessions *For trainees working at locations added by the Contracting Authority the cost will be $50 each*]
In order to serve as a Judge or Alternate Judge, the person who desires to perform such services is required to attend training Clerks shall be required to attend training unless they have attended similar county-provided election training within 90 days prior to the election The failure of a clerk to attend training will not necessarily preclude them from serving, but they will be paid at a reduced rate of pay *($8 per hours verses $10 per hour)* because they have not participated in said training		
☒ **Waive Evening Training**	☒ **Choose Evening Training**	*Waiver of evening training* The County employee overtime costs associated with conducting training after normal business hours will be shared equally among those entities who have election workers attend these sessions By checking the Waive Evening Training box the Contracting Authority is restricting its workers to training conducted during normal business hours
☒ **Use ePollBooks**	☐ **Use Paper Poll Books**	*ePollBooks* For countywide vote center elections the county will be using electronic poll books at each location At high volume polling places two may be used (at the Contracting Officer's Option] [**Cost:** $50 each at locations selected by the Contracting Officer and $100 each at polling places added by the Contracting Authority]
☐ **Add Additional Polling Locations**	☒ **Decline adding more polling locations**	The Contracting Authority may add additional polling locations within its jurisdiction, if the Contracting Officer and Commissioners' Court approve In doing so, the Contracting Authority understands that it will be responsible for 100% of the costs for said location and the location must conform to ADA standards and have Internet connectivity

Contracting Authority to Perform	Contracting Officer to perform	Service
☐ **Contracting Authority to Hire Judges, Alternate Judges and Clerks**	☒ **Contracting Officer to Hire Judges, Alternate Judges and Clerks**	Hire judges, alternate judges, and clerks that, in the opinion of the Contracting Officer, are sufficiently trained for the Contracting Authority's election or as are specified by the Contracting Authority In order to comply with the Texas Election Code, workers must be registered voters from within the jurisdiction holding the election [**Cost:** Base cost of $10 per hour per worker If the person is serving more than 40 hours during a normal county work week (from Thursday through Wednesday) they will be paid $15 per hour for every hour over 40 hours during said week This normally only happens if the person is serving during Early Voting The cost for paying workers will be split 50/50 for polling locations designated by the Contracting Officer 100% of the cost will be charged for locations added by the Contracting Authority] **NOTE:** If the Contracting Authority is hiring the judges, alternate Judges and clerks the Judges and Alternate Judges shall be required to attend training They will also need to be selected based upon §§ 32 002 (c) TEC
If the Contracting Officer is to hire judges, alternate judges and clerks he will notify the Election Judges of the dates of the election and any subsequent runoff election as required by Texas Election Code §4 007 Otherwise the Contracting Authority shall perform this service [No additional cost]		
The cost for all printed ballots (including ballots by mail, sample ballots for polling locations, and test ballots for use in the Logic and Accuracy testing) is $ 25 per ballot For this election cycle, the Contracting Officer will handle ballot by mail requests Our cost for each ballot by mail is $1 60 per mail ballot (not including printing) The Contacting Authority will be charged for each ballot by mail as follows # of ballots by mail sent to precincts within their jurisdiction divided by two		
☐ **Accept**	☒ **Decline**	The Contracting Authority may have an observer present during the tabulation of the votes If Contracting Authority desires an observer it will, prior to Election Day, provide the Contracting Officer with the name and contact information of the person who will represent them at the Central Counting Station
☐	☒	Arrange to have published legal notices regarding the first Logic and Accuracy test of the tabulating equipment The actual cost associated with publishing said notice divided by the number of jurisdictions included in the notice [e g , In the May 2011 election the cost was $1026 74 / 13 = $78 98]

Contracting Authority to Perform	Contracting Officer to perform	Service
Applicable only if the election is cancelled more than 48 hours after the candidate filing deadline		Cancellation Fee If the Contracting Authority cancels its election and notifies the Contracting Officer in writing within forty-eight hours after its candidates filing deadline there will be no cancellation charge If the Contracting Authority cancels its election after the forty-eight hour grace period, it will pay the greater of a $500 cancellation fee or the cost of services and equipment rendered up through the date of cancellation
☒	Reimbursable Fee to be paid to the Contracting Officer	Fees charged by the facilities used will be passed on to the entity No additional fees will be charged
☒	Reimbursable Cost to be paid to the Contracting Officer	*After normal business hours use of County employees during the election cycle will be billed to the entities* Regular pay plus overtime for each employee Said expense, if not directly attributable to a specific entity, will be divided by the number of entities contracting with Galveston County for election services
☒		Contracting Authority agrees to be responsible for any actual damages for repairs of voting equipment caused by its Election Workers during the time the voting equipment was in their possession

3. Compensation, Billing, and Payment.

Pursuant to Texas Election Code §31 100 the fees noted above and throughout this contract are the actual expenses incurred by Contracting Officer in providing the various services contained herein.

During this election cycle the Contracting Officer will be hiring two part time election judges to assist in preparation of the election, answering inquiries from polling locations, and post election duties As noted in paragraph 2.14, the Contracting Authority shall pay $100 per Early Voting and Election Day polling location within its jurisdiction to help defray the $7,400 cost of hiring this part time help.

If the Contracting Officer is hiring the election workers for the Contracting Authority the following is agreed·

(1) The base rate of pay for each worker who has attended training is $10 per hour and the base pay for any clerk who has been unable to attend training is $8 per hour

(2) If any election worker serves more than 40 hours during a normal pay week *(Thursday through Wednesday)* they will be paid time-and-a-half for each hour served over 40 during that pay week

In signing this agreement the Contracting Authority agrees to reimburse the Contracting Officer for the payment of election workers as outlined in this paragraph

In addition to the fees noted in this contract, the Contracting Authority will pay Contracting Officer the greater of Seventy-Five ($75.00) Dollars or an additional ten percent (10%) for general supervision of the election.

Pursuant to Texas Election Code §31 098, Contracting Officer may contract with third persons for election services and supplies agreed to herein and, upon reimbursement by Contracting Authority, which the Contracting Authority hereby agrees to pay when invoiced, will pay the claims for those election expenses on Contracting Authority's behalf

Contracting Officer will invoice Contracting Authority for services rendered under this Contract. Contracting Authority will make payment to Contracting Officer in accordance with the terms and provisions of what is commonly referred to as the Texas Prompt Payment Act

4. Voting System.

The Hart Intercivic 6 1 E-Slate System owned by Galveston County will be the voting system used by Contracting Officer in providing services under this Contract

5.Authorized Representatives.

Contracting Officer's Authorized Representative for all purposes of this Contract is its' Chief Deputy Clerk for Elections.

The parties recognize that Contracting Authority may be contracting with Contracting Officer solely for services to be provided for its own election Alternatively, the parties recognize that Contracting Authority may have contracted with other political subdivisions for the conducting of joint elections and that Contracting Authority is contracting with Contracting Officer for services to be provided for its own election as well as for the elections of other political subdivisions as a result of these separate joint election agreements. Regardless of whether the Contracting Authority is acting solely on behalf of its own election or on behalf of itself and other political subdivisions as a result of separate joint election agreements, the Contracting Authority's Authorized Representative for all purposes of this Contract is

ELAINE POTTER

In the case of a Joint election involving multiple local entities, the Contracting Authority makes known that ELAINE POTTER will serve as the party making decisions relating to said Joint election and the Contracting Authority will be bound by decisions made by this person on its behalf

6. General Provisions.

As specified in Texas Election Code §31 096 this Contract may not change

(1) the authority with whom applications of candidates for a place on a ballot are filed,

(2) the authority with whom documents are filed under Texas Election Code S251 001 et seq , or

(3)the authority to serve as custodian of voted ballots or other election records

As set forth in Texas Election Code §31 099 not later than the 10th day after the date this Contract is executed the Contracting Officer shall file a copy of this Contract with the County Treasurer and the County Auditor

7. WAIVER OF DAMAGES. The parties acknowledge that the Hart Intercivic 6.1 ESlate System and the programming of paper ballots is highly technical and that it is conceivable that despite the efforts of the Contracting Officer it might fail during an election or might contain errors The Contracting Authority agrees that should the electronic voting system fail, it will not make any claim against the Contracting Officer, the County of Galveston, or any of their full or part-time employees, independent contractors or agents for damages of any kind, including but not limited to any and all costs relating to an election contest and/or costs and damages incurred for having to conduct a second election caused as a result of such failure or error

The Contracting Authority acknowledges that holding multiple simultaneous elections presents logistical problems and other problems over and above a single election The Contracting Officer and his employees and agents will attempt to help ensure that these simultaneous elections are conducted without error or mishap, but on occasion, errors or mishaps do occur Accordingly, the Contracting Authority agrees that should an error or mishap occur that it will not make any claim against the Contracting Officer, the County of Galveston, or their full or part-time employees, independent contractors or agents for damages of any kind including but not limited to any and all costs relating to an election contest and/or costs and damages incurred by the Contracting Authority for having to conduct a second election, as a result of such error or mishap

If legal action is filed against the Contracting Authority involving its election and if, the County and/or the Contracting Officer is named as a party to this legal action and the complaint is based solely on allegations made against the Contracting Authority, the Contracting Authority shall be solely responsible for all costs and defense of that suit In addition, Contracting Authority shall be required to provide adequate legal counsel for the County and/or the Contracting Officer and, upon notice to the Contracting Authority and/or County shall be entitled to settle such claim or legal action upon terms it deems most advantageous to itself.

For purposes of implementing this Contract, the Contracting Officer and the Contracting Authority designate the following individuals, and whenever the Contract requires submissions of information or notice to the Contracting Officer or the Contracting Authority, submissions or notices shall be made to these individuals

Contracting Officer:
Dwight Sullivan, County Clerk
Attention William Sargent, Chief Deputy Clerk for Elections
Galveston County Judice Center
600 59 th Street, Suite 2001
Galveston, TX 77551-4180
409-770-6005
Email: William Sargent@co galveston.tx us

Contracting Authority:
Bayview Municipal Utility District
309 Miles Road
Bacliff, TX 77518

Phone· 281-339-1959

Email. bayviewmud@verizon net

Although the parties recognize that pursuant to §31 092 of the Texas Election Code this Contract needs not be submitted to the Galveston County Commissioners' Court to be placed on the Consent Agenda as a Receive and File Item, they find it prudent so to do

The Rest of This Page has Intentionally Been Left Blank.

Executed this 21st day of August, 20 12

Contracting Officer

Dwight D Sullivan

By: Brandy Chapman **Deputy**

Brandy Chapman

Contracting Authority:

Bayview Municipal Utility District

Name: Leonard Loukanis

( ) City Manager ( ) Mayor

( ) Superintendent (X) President

( ) Chair County Executive Committee

( ) City Secretary ( ) Other

Received and Filed:

Galveston County

Hon. Mark Henry

County Judge

Attest:

Dwight D. Sullivan

County Clerk

By: Brandy Chapman **Deputy**

Brandy Chapman

Date: 8/21/12

Date Copy of Agreement Furnished to County Treasurer: _____

Date Copy of Agreement Furnished to County Auditor: _____

SECRETARY'S CERTIFICATE

THE STATE OF TEXAS §
COUNTY OF GALVESTON
BAYVIEW MUNICIPAL UTILITY DISTRICT §

The undersigned Secretary of the Board of Supervisors (the "Board") of Bayview Municipal Utility District (the "District"), hereby certifies as follows.

1. The Board convened in regular session, open to the public, on July 26, 2012, at the District Office at 309 Miles Road, Bacliff, Texas 77518, Texas, and the roll was called of the members of the Board, to-wit·

Leonard Loukanis, President
Billy Woosley, Jr., Vice President
Troy Bradfield, Secretary
Linda Elliott, Supervisor
Janifer Heinze, Supervisor

All members of the Board were present, except the following. _____, thus constituting a quorum. Whereupon among other business, the following was transacted at such Meeting. A written

ORDER CALLING SUPERVISORS ELECTION

was duly introduced for the consideration of the Board and read in full. It was then duly moved and seconded that such Order be adopted, and, after due discussion, such motion, carrying with it the adoption of such Order, prevailed and carried by the following votes

AYES. 5 NOES: ____

2 A true, full, and correct copy of the aforesaid Order adopted at the Meeting described in the above and foregoing paragraph is attached to and follows this Certificate, such Order has been duly recorded in the Board's minutes of such Meeting, the above and foregoing paragraph is a true, full, and correct excerpt from the Board's minutes of such Meeting pertaining to the adoption of such Order; the persons named in the above and foregoing paragraph are the duly chosen qualified, and acting officers and members of the Board as indicated therein; each of the officers and members of the Board was duly and sufficiently notified officially and personally, in advance, of the time, place, and purpose of such Meeting, and that such Order would be introduced and considered for adoption at such Meeting and each of such officers and members consented, in advance, to the holding of such Meeting for such purpose; and such Meeting was open to the public, and public notice of the time, place, and purpose of such Meeting was given, all as required by Chapter 551, Texas Government Code, and Section 49 063, Texas Water Code, both as amended.

SIGNED this 26th of July, 2012.

BAYVIEW MUNICIPAL UTILITY DISTRICT OF GALVESTON COUNTY

Secretary, Board of Supervisors

ORDER CALLING SUPERVISORS ELECTION

WHEREAS, Bayview Municipal Utility District of Galveston County, Texas (the "*District*") is required to hold a Supervisors Election on the first Tuesday in November of even-numbered years unless each candidate in the election is unopposed,

WHEREAS, the Board of Supervisors (the "*Board*") of the District, pursuant to Chapter 31, Texas Election Code, is entering into an agreement for election services with the Elections Administrator (the "*Administrator*") for Galveston County, Texas (the "Election Services Agreement") for purposes of providing election administration services on behalf of the District,

WHEREAS, the Board, pursuant to Chapter 271, Texas Election Code, has entered into an agreement to conduct a joint election with Galveston County and other political subdivisions within Galveston County (the "Joint Election Agreement"), and

WHEREAS, the Board deems it necessary and appropriate to establish the procedures whereby such election may be held;

IT IS, THEREFORE, ORDERED BY THE BOARD THAT:

1 Pursuant to Section 49 103 of the Texas Water Code and Section 41 001 of the Election Code, an election shall be held for and within the District on November 6, 2012, for the election of two Supervisors for the District, each of whom shall serve a four-year term, unless the Secretary of the Board certifies that each candidate is unopposed for election

2 In the event the Secretary of the Board certifies that each candidate is unopposed for election, the Board hereby determines that, pursuant to Sections 2 051 through 2 054 of the Election Code, it will declare such unopposed candidates elected to the office of supervisor without an election The Board adopts the practice of canceling elections when permitted pursuant to Sections 2 052 through 2 053 of the Election Code as part of its election practices for this election and subsequent elections, until and unless such procedure is changed by formal action of the Board

3 Except as otherwise provided herein, the presently existing boundaries and territory of the Galveston County Election Precincts that are wholly or partially within the boundaries of the District are hereby designated and established as the voting precincts for the District for the Election The polls shall be open for voting on Election Day from 7 00 a.m to 7·00 p m at

<u>District Precinct No. 1</u>	_____
Galveston County Election	_____
Precinct No. ___	194 and 468

After duly considering the requirements of the Texas Election Code, the Board hereby finds the location to be a suitable public building and proper place for conducting said election. The officers of the Election shall be those qualified individuals recommended and appointed by the Administrator as provided in the Joint Election Agreement

4 Early voting in such election by personal appearance shall be conducted at any locations designated for early voting by Galveston County, being the designated early voting polling places as provided in the Joint Election Agreement The polls shall be open at each early voting location on October 22, 2012 through November 2, 2012, as designated by Galveston County for each location

The Board hereby appoints the regular early voting clerk and the Administrator as the joint clerk for early voting, as provided in the Joint Election Agreement Early voting ballots in the election by mail may be obtained from and mailed to the Early Voting Clerk at Dwight D Sullivan, County Clerk Attn Ballots P O Box 17253, Galveston, TX 77552-7253, which is the Early Voting Clerk's official mailing address

5 In accordance with Section 61 012(b), voting shall be conducted by an electronic voting system adopted by resolution of the Commissioners Court of Galveston County, Texas, which has been certified by the Texas Secretary of State as complying with the requirement for an accessible voting system. Such voting system is described on **Exhibit A** attached hereto and by this reference made a part hereof The Board hereby adopts the use of the accessible voting system described above as part of its election practices for this election and subsequent elections, until and unless such procedure is changed by formal action of the Board

6 The ballots for such election shall be prepared in sufficient number and in conformity with the Texas Election Code, as it may be amended from time to time, and shall be substantially as follows

---

BAYVIEW MUNICIPAL UTILITY DISTRICT OF GALVESTON COUNTY, TEXAS

SUPERVISORS ELECTION
November 6, 2012

OFFICIAL BALLOT

Vote for no more than two candidates of your choice by placing an "X" in the squares beside the candidates' names

Supervisor
Vote for none, one or two

[ ] _____
[ ] _____
[ ] _____
[ ] _____
[ ] _____

7 The personnel for the central counting station shall be those qualified individuals recommended and appointed by the Administrator as provided in the Election Services Agreement and the Joint Election Agreement Notice of the election will be given by posting notice of the election on the bulletin board within the District used for posting notices of the meetings of the Board and in a public place in each election precinct in the District at least 21 days before the election

8 All qualified resident voters of the District shall be allowed to vote at such election The election shall be held and conducted in all respects as provided by applicable law The election shall also be conducted pursuant to the terms and conditions of the Election Services Agreement and the Joint Election Agreement As provided in the Election Services Agreement, the Administrator shall serve as the joint custodian of record for all election returns and provide for the storage of election records as provided for in the Election Services Agreement The Secretary of the Board hereby appoints and the Board approved the appointment of Elaine Potter as the Secretary's agent to perform the duties provided by Section 31 123 of the Election Code

9 Pursuant to the applicable provisions of the Texas Election Code, including but not limited to Chapter 31, Texas Election Code, the Board hereby authorizes and approves the Election Services Agreement presented by the Administrator, and authorizes the Board's president to execute and the Board's Secretary to attest to such Election Services Agreement

10 The Board's President and Secretary and the attorney for the District are hereby authorized and directed to make any filings required by the Federal Voting Rights Act The Board's President and Secretary and the attorney for the District are further authorized and directed to take any action necessary to comply with the provisions of the Texas Elections Code, the Texas Water Code and the Federal Voting Rights Act and the terms and provisions of the Election Services Agreement and the Joint Election Agreement in carrying out the provisions of this Order, whether or not expressly authorized herein

11 The officers of the Board are each authorized to evidence adoption of this Order and directed to do any and all things legal and necessary to hold such election and otherwise to carry out the intent hereof

12 In case any provision in this Order shall be invalid, illegal or unenforceable, the validity, legality and enforceability of the remaining provisions shall not in any way be affected or impaired thereby

* * *

AGENDA ITEM #6b

Contract for Election Services

[Joint Elections - November Even Numbered Years]

This Contract is made and entered into this 15th day of August, 2012 by and between Hon. Dwight D. Sullivan, County Clerk and County Election Officer for Galveston County("Contracting Officer") and Arnold Cross, Jr. on behalf of Flamingo Isles MUD of Galveston County, Texas ("Contracting Authority").

This Contract is being entered into pursuant to Texas Election Code, Chapter 31, Subchapter D for the purpose of ensuring that the Contracting Officer and the Contracting Authority understand the tasks each is to perform in connection with the following election and any subsequent runoff election, to-wit:

Purpose of Election: Directors Election

NOVEMBER 6, 2012
Election Date

DECEMBER 15, 2012
Runoff Election Date

1. Duties and Services of the Contracting Officer.

The Contracting Officer shall be responsible for performing the following duties and furnishing the following services and equipment in connection with the election and any subsequent runoff election.

1.1 Program, or arrange to have programmed, the ballot.
[Cost: Based upon the number of contests on the ballot. See attached Fee Schedule]

1.2 Arrange to have published the legal notices of the testing of the electronic tabulating equipment as provided in Texas Election Code §127.096 and conduct all required tests of the electronic tabulating equipment under Texas Election Code §§127.096-127.098 and §§ 129.021-129.023. The first test shall be conducted at least five days prior to the election. In addition, it will be performed during normal business hours and be open to the public. The Contracting Officer proposes conducting the first text no later than **Thursday, September 20, 2012**.
[Cost: The cost for publishing the notice will be split equally between all the parties involved with said joint election. See attached Fee Schedule]

1.3 Provide technical and equipment support for the voting machines and equipment being provided to the Contracting Authority. In the event there is a failure of a voting machine the Contracting Officer shall try to remedy the problem over the phone. If he is unable so to do he will dispatch to locations within Galveston County the appropriate technical support personnel and equipment to correct the failure.
[Cost: Included in the 10% election fee]

1.4 On behalf of the Contracting Authority, obtain voter registration lists from the Voter Registrar to be used during Early Voting and on Election Day. Since this is a joint countywide vote center election with the county of Galveston all partners to this agreement shall use electronic poll books.
[See Section 2.3 below]

For additional Duties of the Contacting Officer see the table below.

2. Duties and Services of the Contracting Authority.
The Contracting Authority will be responsible for performing the duties and services set forth in this section.

2.1 Prepare and submit all required submissions to the U.S. Department of Justice under the Federal Voting Rights Act of 1965 for its election and runoff election.

2.2 Publish notices of the election in accordance with Section 4.003(a) of the Texas Election Code.

2.3 Provide the Contracting Officer with the Contracting Authority's requirements for voter registration lists and poll books for Early Voting and Election Day. [See section 1.4 above]

2.4 In accordance with Texas Election Code §85.005 establish uniform voting days and hours that conform to the dates and times the County of Galveston is conducting its general election. The Texas Election Code §85.005 (d) requires cities to have at least two days of early voting at the main early voting location for 12 hours each day. The Contracting Authority will work with the Contracting Officer and other jurisdictions holding a joint election with the County in order to ensure uniform election hours county-wide.

2.5 In accordance with Texas Election Code §4.008 as amended, deliver written notice of the election to the Contracting Officer no later than 71 days prior to the Election Day **[August 27, 2012]**.

2.6 If the Contracting Authority desires to have an additional polling location(s) to those selected by the Contracting Officer for the General Election, the Contracting Authority will submit a list of said locations to the Contracting Officer no later than **August 1, 2012**. Upon notification by the Contracting Authority, the Contracting Officer shall conduct a site inspection of the location to ensure that they comply with Americans with Disabilities Act (ADA) accessibility requirements and that they also have adequate Verizon MiFi Internet access. By **September 4, 2012**, the Contracting Officer will share with the Contracting Authority the results of the site inspection and inform same of any adjustments that may be required in order to utilize the location(s) selected by the Contracting Authority. [See section 2.16 below]

In the event that polling locations within the Contracting Authority's jurisdiction are moved, it will be the responsibility of the Contracting Authority to comply with §43.062 of the Texas Election Code that requires voters be notified of the new location by placing a notice at the old polling location telling the voters of the nearest new polling location.

2.7 Provide to the Contracting Officer the language for any ballot propositions, the names of election contests, the names of candidates as they are to appear on the ballot, a copy of a sample ballot, ballot draw information and a completed "Requirements to Program the Ballot" form. These materials will be provided in an electronic form to the Contracting Officer by **no later than August 27, 2012**. All language on the ballot must be provided in both English and Spanish.

2.8 Return to the Contracting Officer, by **5 p.m. on SEPTEMBER 18, 2012**, confirmation that the sample ballots the Contracting Officer has prepared and provided to the Contracting Authority are satisfactory or provide changes that need to be made.

2.9 The Contracting Officer will be conducting elections for numerous Contracting Authorities on the same day. This will be a joint countywide vote center election which allows a prospective voter the ability to vote at any of the County's election day polling places. The parties understand that each election has its own challenges and requirement and that failure to provide the information in paragraphs 2.5, 2.6, 2.7 and 2.8 by the above dates will place an undue burden on the Contracting Officer that may prevent him from being able to provide his services to the Contracting Authority in a timely and accurate manner. **Should the Contracting Authority miss said deadlines, and should the Contracting Officer be unable to provide his services in a timely and accurate manner the Contracting Authority shall hold the Contracting Officer and his employees harmless from any election errors and corresponding liability and/or damages that may result, including but not limited to the costs incurred related to an election contest and/or the need to conduct a subsequent election.**

2.10 As required by § 67.017 (b) and the Secretary of State's Office, make an electronic precinct-by-precinct report to the Secretary of State's Office by no later than the 30th day after Election Day.

2.11 Unless otherwise stipulated, transport, or have its Presiding Election Judges transport on its behalf, the voting machines and equipment to the Contracting Authority's Early Voting and Election Day voting locations.

2.12 Supervise, with the assistance of the Contracting Officer, the overall conduct of its election in Contracting Authority's jurisdiction including the supervision tabulation of results.

2.13 Since this will be a countywide vote center election in which numerous entities will be involved, the Contracting Authority may appoint one person to serve on the Signature Verification Committee/Early Voting Ballot Board. The same person, or another representative, may also be appointed to serve on the Ballot Resolution Board. If the Contracting Authority makes such an appointment(s) they shall provide the Contracting Officer with contact information for each of these individuals in writing by no later than Friday, **October 12, 2012**. [See http://www.galvestonvotes.org/Resources/WhatHappensElectionDay.html for a summary of the duties of the various boards]

2.14 Pay a $100 fee per Early Voting and Election Day polling location within its jurisdiction to cover a portion of the Contracting Officer's costs for hiring two election judges to provide the Contracting Authority and its Judges election support services throughout the term of this Contract.

In addition, the contracting Authority will split equally with the Contracting Officer all the other costs for each Early Voting and Election Day polling place located within its jurisdiction. If the Contracting Authority desires to have an additional polling location located within its jurisdiction, they will be charged the $100 fee noted above and 100% of the costs associated with the additional polling location(s) (e.g., equipment, election kit, poll worker costs, etc.).

2.15 Pursuant to the provisions of the Help America Vote Act of 2002 [HAVA], provide the appropriate number of bilingual poll workers as determined by guidance provided by the U.S. Department of Justice. If the Contracting Authority is appointing personnel to staff a polling location, the Contracting Authority may not impose this duty on

Contracting Officer. But, the Contracting Officer will attempt to assist Contracting Authority in finding bilingual poll workers.

2.16 All polling locations used during this election cycle shall comply with the Americans with Disabilities (ADA) accessibility requirements. If there is a shortage of ADA compliant voting locations, remedies shall be found to allow handicapped/disabled persons to cast their vote. In addition, since it is critical to record in real time those people who have cast their ballots, Internet access for the electronic poll books is required. All the polling locations must be accessible to the Internet through our Verizon MiFi units. ADA compliance and Internet connectivity shall be verified by the Contracting Officer prior to any new voting location being added to the list of polling places.

Special Provision: Bilingual Poll Worker Requirements. Galveston County was a party in Civil Action No. 3:07 CV 377 styled "The United States of America, Plaintiff, v. Galveston County, Texas, Defendant in the United States District Court for the Southern District of Texas, Galveston Division". It entered into a Consent Decree that acknowledged it is covered under both Section 4(f)(4) of the Voting Rights Act as amended and 42 U.S.C. §1973(b)(4)(Section 4(f)(4) to provide Spanish language written materials and assistance to voters. Galveston also has an obligation to ensure that its polling places and poll workers comply with the Help America Vote Act of 2002 ("HAVA"), 42 U.S.C. §§15301 et. seq. Although this Consent Decree expired December 31, 2010, Galveston County agreed that it is permanently enjoined from:

a) Failing to provide in Spanish "any registration or voting notices, forms, instructions, assistance, or other materials or information relating to the electoral process, including ballots", that they provide in English as required by Section 4(f)(4) of the Voting Rights Act, 43U.S.C.S1973b(f)(4); and

b) Failing to ensure that poll workers provide and receive adequate training regarding (1) the use of providing provisional ballots under Section 302(a) of HAVA; and (2) the display of all HAVA-required signs under Section 302(b) of HAVA.

Contracting Authority understands that regardless of whether it desires to engage the Contracting Officer's services, it likewise has an obligation to comply fully with the same terms and provisions of the Voting Rights Act and the Help America Vote Act.

Cancellation of Contract: Contracting Authority may cancel this Contract without incurring any expenses by notifying Contracting Officer by email or other written form of its intention to so cancel by no later than forty-eight (48) hours after its candidates filing deadline. Should Contracting Authority desire to cancel this Contract after that time it may do so upon twenty-four (24) hours written notice to Contracting Officer but the Contracting Authority will be obligated to pay Contracting Officer the greater of a fee of $500 or the cost of services and equipment rendered up through the date of cancellation.

Selection of Services:

The Contracting Authority hereby selects the following services that it wants the Contracting Officer to provide and those services for which the Contracting Authority shall be responsible. The Contracting Officer will affirm his willingness to perform the services requested by the Contracting Authority by signing this agreement.
[Some of the choices have been preselected because they are required in this Joint Countywide Vote Center Election]

Contracting Authority to Perform	Contracting Officer to perform	Service
☐	☒	Procure and distribute to the Election Judges all necessary election supplies, including but not limited to sample ballots, election kits, and office supplies such as paperclips, and pens. Each kit and unused election supplies are to be returned by the Contracting Authority to the Contracting Officer after the voting polls close on Election Night. [**Cost:** $50 per kit - *To be split 50/50 for those polling locations the Contracting Officer selected within an entity's jurisdiction]*
☐	☒	Arrange for receiving and checking in the supplies and equipment being returned by the Election Judges after the voting polls close on Election Night. [**Cost:** Overtime for staff and part time workers hired to provide this service will be evenly split between ALL the entities participating in this joint election.]
☐	☒	Procure all necessary voting machines and equipment for use at early voting and election day locations and prepare them for use. [**Cost:** $250 per eSlate or JBC and $300 per DAU eSlate - *To be split 50/50 for those polling locations the Contracting Officer selected within an entity's jurisdiction]*]
☐	☒	Transport, or arrange to have transported, the voting machines and equipment to and from the early voting locations. [**Cost:** $100 delivery per location].
☐	☒	Arrange for programming of the ballot and the Logic and Accuracy Testing of the counting equipment. [**Cost:** Determined by the number of contests on the entity's ballot *[not the entire combined ballot]*: $550 for up to ten contests, $1,100 for up to 20, $1,650 for up to 30, $2,450 for up to 40 and $3,000 for 41 or more contests.]

Contracting Authority to Perform	Contracting Officer to perform	Service
☐	☒	Arrange for the use of a central counting station and for the tabulating and supervisory personnel and equipment needed at the counting station. Prepare the testing materials for the tabulation of the ballots to be used with electronic tallying equipment. Prepare the unofficial tabulation of precinct results on Election Night. [**Cost:** $350 for use of the equipment plus overtime for county employees doing the tabulation (est. max. $350) These costs are to be shared evenly between all the parties that participate in this joint countywide vote center election.]
☐	☒	Assist the Contracting Authority in the general overall supervision of the election and any subsequent runoff election and provide advisory services in connection with the decisions to be made and the actions taken by the Contracting Authority who is the convening authority for the election/runoff election. [**Cost:** Included in the 10% election fee]
☐	☒	Conduct Early Voting, Election Day Voting, and bilingual training with at least two Election Day training sessions being offered during the evening hours beginning at 5:30 p.m. [**Cost:** $25 per trainee attending the four hour sessions. *For trainees working at locations added by the Contracting Authority the cost will be $50 each*]
In order to serve as a Judge or Alternate Judge, the person who desires to perform such services is required to attend training. Clerks shall be required to attend training unless they have attended similar county-provided election training within 90 days prior to the election. The failure of a clerk to attend training will not necessarily preclude them from serving, but they will be paid at a reduced rate of pay *($8 per hours verses $10 per hour)* because they have not participated in said training.		
☐ **Waive Evening Training**	☒ **Choose Evening Training**	*Waiver of evening training:* The County employee overtime costs associated with conducting training after normal business hours will be shared equally among those entities who have election workers attend these sessions. By checking the Waive Evening Training box the Contracting Authority is restricting its workers to training conducted during normal business hours.
☒ **Use ePollBooks**	☐ **Use Paper Poll Books**	*ePollBooks:* For countywide vote center elections the county will be using electronic poll books at each location. At high volume polling places two may be used (at the Contracting Officer's Option] [**Cost:** $50 each at locations selected by the Contracting Officer and $100 each at polling places added by the Contracting Authority.]
☐ **Add Additional Polling Locations**	☒ **Decline adding more polling locations**	The Contracting Authority may add additional polling locations within its jurisdiction, if the Contracting Officer and Commissioners' Court approve. In doing so, the Contracting Authority understands that it will be responsible for 100% of the costs for said location and the location must conform to ADA standards and have Internet connectivity.

Contracting Authority to Perform	Contracting Officer to perform	Service
☐ **Contracting Authority to Hire Judges, Alternate Judges and Clerks**	☒ **Contracting Officer to Hire Judges, Alternate Judges and Clerks**	Hire judges, alternate judges, and clerks that, in the opinion of the Contracting Officer, are sufficiently trained for the Contracting Authority's election or as are specified by the Contracting Authority. In order to comply with the Texas Election Code, workers must be registered voters from within the jurisdiction holding the election. [**Cost:** Base cost of $10 per hour per worker. If the person is serving more than 40 hours during a normal county work week (from Thursday through Wednesday) they will be paid $15 per hour for every hour over 40 hours during said week. This normally only happens if the person is serving during Early Voting. The cost for paying workers will be split 50/50 for polling locations designated by the Contracting Officer. 100% of the cost will be charged for locations added by the Contracting Authority.] **NOTE:** If the Contracting Authority is hiring the judges, alternate Judges and clerks the Judges and Alternate Judges shall be required to attend training. They will also need to be selected based upon §§ 32.002 (c) TEC.
If the Contracting Officer is to hire judges, alternate judges and clerks he will notify the Election Judges of the dates of the election and any subsequent runoff election as required by Texas Election Code §4.007. Otherwise the Contracting Authority shall perform this service. [No additional cost]		
The cost for all printed ballots (including ballots by mail, sample ballots for polling locations, and test ballots for use in the Logic and Accuracy testing) is $.25 per ballot. For this election cycle, the Contracting Officer will handle ballot by mail requests. Our cost for each ballot by mail is $1.60 per mail ballot (not including printing). The Contacting Authority will be charged for each ballot by mail as follows: # of ballots by mail sent to precincts within their jurisdiction divided by two.		
☐ **Accept**	☒ **Decline**	The Contracting Authority may have an observer present during the tabulation of the votes. If Contracting Authority desires an observer it will, prior to Election Day, provide the Contracting Officer with the name and contact information of the person who will represent them at the Central Counting Station.
☐	☒	Arrange to have published legal notices regarding the first Logic and Accuracy test of the tabulating equipment The actual cost associated with publishing said notice divided by the number of jurisdictions included in the notice. [e g., In the May 2011 election the cost was $1026 74 / 13 = $78 98]

Contracting Authority to Perform	Contracting Officer to perform	Service
Applicable only if the election is cancelled more than 48 hours after the candidate filing deadline		Cancellation Fee: If the Contracting Authority cancels its election and notifies the Contracting Officer in writing within forty-eight hours after its candidates filing deadline there will be no cancellation charge. If the Contracting Authority cancels its election after the forty-eight hour grace period, it will pay the greater of a $500 cancellation fee or the cost of services and equipment rendered up through the date of cancellation.
☒	Reimbursable Fee to be paid to the Contracting Officer	Fees charged by the facilities used will be passed on to the entity. No additional fees will be charged.
☒	Reimbursable Cost to be paid to the Contracting Officer	*After normal business hours use of County employees during the election cycle will be billed to the entities.* Regular pay plus overtime for each employee. Said expense, if not directly attributable to a specific entity, will be divided by the number of entities contracting with Galveston County for election services
☒		Contracting Authority agrees to be responsible for any actual damages for repairs of voting equipment caused by its Election Workers during the time the voting equipment was in their possession.

3. Compensation, Billing, and Payment.

Pursuant to Texas Election Code §31.100 the fees noted above and throughout this contract are the actual expenses incurred by Contracting Officer in providing the various services contained herein.

During this election cycle the Contracting Officer will be hiring two part time election judges to assist in preparation of the election, answering inquiries from polling locations, and post election duties. As noted in paragraph 2.14, the Contracting Authority shall pay $100 per Early Voting and Election Day polling location within its jurisdiction to help defray the $7,400 cost of hiring this part time help.

If the Contracting Officer is hiring the election workers for the Contracting Authority the following is agreed.

(1) The base rate of pay for each worker who has attended training is $10 per hour and the base pay for any clerk who has been unable to attend training is $8 per hour.

(2) If any election worker serves more than 40 hours during a normal pay week *(Thursday through Wednesday)* they will be paid time-and-a-half for each hour served over 40 during that pay week.

In signing this agreement the Contracting Authority agrees to reimburse the Contracting Officer for the payment of election workers as outlined in this paragraph.

In addition to the fees noted in this contract, the Contracting Authority will pay Contracting Officer the greater of Seventy-Five ($75.00) Dollars or an additional ten percent (10%) for general supervision of the election.

Pursuant to Texas Election Code §31.098, Contracting Officer may contract with third persons for election services and supplies agreed to herein and, upon reimbursement by Contracting Authority, which the Contracting Authority hereby agrees to pay when invoiced, will pay the claims for those election expenses on Contracting Authority's behalf.

Contracting Officer will invoice Contracting Authority for services rendered under this Contract Contracting Authority will make payment to Contracting Officer in accordance with the terms and provisions of what is commonly referred to as the Texas Prompt Payment Act

4. Voting System.

The Hart Intercivic 6.1 E-Slate System owned by Galveston County will be the voting system used by Contracting Officer in providing services under this Contract

5.Authorized Representatives.

Contracting Officer's Authorized Representative for all purposes of this Contract is its' Chief Deputy Clerk for Elections.

The parties recognize that Contracting Authority may be contracting with Contracting Officer solely for services to be provided for its own election. Alternatively, the parties recognize that Contracting Authority may have contracted with other political subdivisions for the conducting of joint elections and that Contracting Authority is contracting with Contracting Officer for services to be provided for its own election as well as for the elections of other political subdivisions as a result of these separate joint election agreements. Regardless of whether the Contracting Authority is acting solely on behalf of its own election or on behalf of itself and other political subdivisions as a result of separate joint election agreements, the Contracting Authority's Authorized Representative for all purposes of this Contract is

Kathleen Ellison.

In the case of a Joint election involving multiple local entities, the Contracting Authority makes known that Kathleen Ellison will serve as the party making decisions relating to said Joint election and the Contracting Authority will be bound by decisions made by this person on its behalf

6. General Provisions.

As specified in Texas Election Code §31 096 this Contract may not change.

(1) the authority with whom applications of candidates for a place on a ballot are filed;

(2) the authority with whom documents are filed under Texas Election Code S251 001 et. seq., or

(3)the authority to serve as custodian of voted ballots or other election records.

As set forth in Texas Election Code §31.099 not later than the 10th day after the date this Contract is executed the Contracting Officer shall file a copy of this Contract with the County Treasurer and the County Auditor

7. WAIVER OF DAMAGES. The parties acknowledge that the Hart Intercivic 6.1 ESlate System and the programming of paper ballots is highly technical and that it is conceivable that despite the efforts of the Contracting Officer it might fail during an election or might contain errors. The Contracting Authority agrees that should the electronic voting system fail, it will not make any claim against the Contracting Officer, the County of Galveston, or any of their full or part-time employees, independent contractors or agents for damages of any kind, including but not limited to any and all costs relating to an election contest and/or costs and damages incurred for having to conduct a second election caused as a result of such failure or error

The Contracting Authority acknowledges that holding multiple simultaneous elections presents logistical problems and other problems over and above a single election The Contracting Officer and his employees and agents will attempt to help ensure that these simultaneous elections are conducted without error or mishap, but on occasion, errors or mishaps do occur Accordingly, the Contracting Authority agrees that should an error or mishap occur that it will not make any claim against the Contracting Officer, the County of Galveston, or their full or part-time employees, independent contractors or agents for damages of any kind including but not limited to any and all costs relating to an election contest and/or costs and damages incurred by the Contracting Authority for having to conduct a second election, as a result of such error or mishap.

If legal action is filed against the Contracting Authority involving its election and if, the County and/or the Contracting Officer is named as a party to this legal action and the complaint is based solely on allegations made against the Contracting Authority, the Contracting Authority shall be solely responsible for all costs and defense of that suit. In addition, Contracting Authority shall be required to provide adequate legal counsel for the County and/or the Contracting Officer and, upon notice to the Contracting Authority and/or County shall be entitled to settle such claim or legal action upon terms it deems most advantageous to itself

For purposes of implementing this Contract, the Contracting Officer and the Contracting Authority designate the following individuals, and whenever the Contract requires submissions of information or notice to the Contracting Officer or the Contracting Authority, submissions or notices shall be made to these individuals·

Contracting Officer:
Dwight Sullivan, County Clerk
Attention: William Sargent, Chief Deputy Clerk for Elections
Galveston County Judice Center
600 59 th Street, Suite 2001
Galveston, TX 77551-4180
409-770-6005
Email William.Sargent@co.galveston tx us

Contracting Authority:
Flamingo Isles MUD of Galveston County, TX
c/o Fulbright & Jaworski
1301 McKinney St. 5100
Houston TX 77010
Phone: 713-651-3612 (Kathleen Ellison)

Email: Kellison@fulbright.com

Although the parties recognize that pursuant to §31.092 of the Texas Election Code this Contract needs not be submitted to the Galveston County Commissioners' Court to be placed on the Consent Agenda as a Receive and File Item, they find it prudent so to do.

The Rest of This Page has Intentionally Been Left Blank.

Executed this 21st day of August, 2012

Contracting Officer:

Dwight D. Sullivan

By: Brandy Chapman **Deputy**

Brandy Chapman

Contracting Authority:

Name: Arnold V. Cross, JR

( ) City Manager ( ) Mayor

( ) Superintendent (X) President

( ) Chair County Executive Committee

( ) City Secretary ( ) Other

Received and Filed:

Galveston County

Hon. Mark Henry

County Judge

Attest:

Dwight D. Sullivan

County Clerk

By: Brandy Chapman **Deputy**

Brandy Chapman

Date: 8/21/12

Date Copy of Agreement Furnished to County Treasurer. _____

Date Copy of Agreement Furnished to County Auditor: _____

AGENDA ITEM #7

ORDER OF GENERAL ELECTION

An election is hereby ordered to be held on NOVEMBER 6, 2012 in GALVESTON County, Texas for the purpose of electing various county and precinct officers, including a District Clerk, County Commissioners, County Sheriff, and Justices of the Peace and Constables as required by Article XVI, Section 65 of the Texas Constitution

Early Voting by Personal appearance will be conducted at the Main polling place, located in the Second Floor Conference Room of the County Justice Center, located at 600 59th Street, Galveston, TX 77551. Additional branch locations will also be open for Early Voting once Commissioners Court approves said polling places.

These polling locations will be open as follows:

Monday, October 22 - Friday, October 26: 8 a.m. - 5 p.m.
Saturday, October 23: 7 a m. - 7 p.m.
Sunday, October 24: 1 p.m. - 6 p.m.
Monday, October 25 - Friday, November 2: 7 a.m. - 7 p.m.

Applications for Ballot by Mail should be mailed to:

Dwight D Sullivan
County Clerk
Attention: Ballots by Mail
Post Box 17253
Galveston, TX 77552-7253

Issued this the August 16, 2012

Mark Henry, County Judge

AGENDA ITEM #8

PROPOSED NOVEMBER 6, 2012 EARLY VOTING LOCATIONS & ANALYSIS

Image of Location	Facility and Location	ADA	MiFi	Comments	Number	District	
	Joe Faggard Community Center, 1700 Highway 87, Crystal Beach 77650	Yes	Yes	ADA COMPLIANT AND MIFI CONNECTION IS GOOD	1	**1**	1
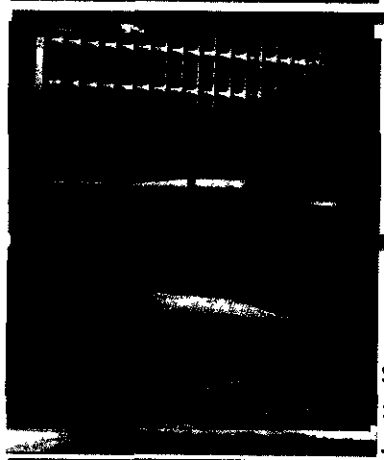	**Galveston County Court House, 722 Moody, 2nd Floor, Galveston 77550**	Yes See Note	**Hard Wired**	Requires some remedies to make it ADA compliant and has poor MiFi Connectivity	3	**3**	1
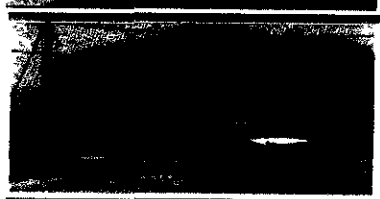	**Seaside Baptist Church, 16534 Termini-San Luis Pass Rd, Jamaica Beach 77554**	Yes	Yes	WE HAVE USED THIS LOCATION A NUMBER OF TIMES WITH GOOD SUCCESS	10	**2**	1
	Bayou Vista Community Center, 783 C. Marlin Street, Bayou Vista 77563	Yes	Yes	WE HAVE USED THIS LOCATION A NUMBER OF TIMES WITH GOOD SUCCESS	11	**2**	2
	Greater St. Matthews Baptist Church, Foyer, 6333 Highway 6, Hitchcock 77563	Yes	Yes	NEED TO USE THE FOYER OF THE MAIN CHURCH AND TO SET UP TEMPORARY DISABLED PARKING UNDER THE COVERED FOYER ENTRANCE	12	**3**	2

	West County Building, Court Room, 11730 Highway 6, Santa Fe 77510	Yes	**Hard Wired**	WE HAVE USED THIS LOCATION A NUMBER OF TIMES WITH GOOD SUCCESS	14	**2**	3
	Runge Park Community Center, 4605 Peck Avenue, Santa Fe 77517	Yes	Yes	WE HAVE USED THIS LOCATION A NUMBER OF TIMES WITH GOOD SUCCESS	16	**2**	4
	Nessler Center 2010 Fifth Avenue North, Texas City 77590	Yes	Yes	WE HAVE USED THIS LOCATION A NUMBER OF TIMES WITH GOOD SUCCESS	18	**3**	3
	Carver Park Center "Carter Room" 6415 Park Avenue, Texas City 77591	Yes	Yes	WE HAVE USED THIS LOCATION NUMEROUS TIMES BEFORE REQUIRES THE MIFI TO BE PLACED NEAR THE WINDOW FOR GOO RECEPTION BUT OTHERWISE IT IS GOOD	23	**3**	4
	La Marque City Hall Community Room 1109 Bayou Road La Marque 77568	Yes	Yes	WE HAVE USED THIS LOCATION NUMEROUS TIMES BEFORE PLACE-MENT OF MIFI UNIT NEAR THE DOOR IS CRITICAL FOR GOOD RECEPTION	24	**3**	13

	Dickinson Community Center, 2714 Highway 3, Dickinson 77539	Yes	**Hard Wired**	WE HAVE USED THIS LOCATION NUMEROUS TIMES NEED TO RESERVE ONE OF THE DISABLED PARKING SPACES FOR VOTERS	28	**3**	5
	Bacliff Community Center, 4503 11th Steet, Bacliff 77518	Yes	**Hard Wired**	WE HAVE USED THIS LOCATION NUMEROUS TIMES NEED TO DO SOME SPECIAL THINGS FOR ADA COMPLIANCE BUT NOT A MAJOR ISSUE	31	**1**	2
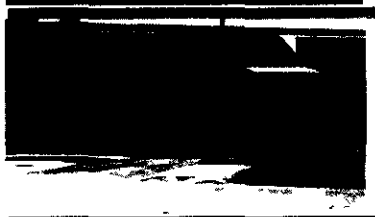	**Kemah Civic Center, 800 Harris Avenue @ Highway 146, Kemah 77575**	Yes	Yes	WE HAVE USED THIS SITE SEVERAL TIMES AND HAVE FOUND IT TO BE GOOD WITH EASY ACCESS FOR VOTERS	33	**1**	3
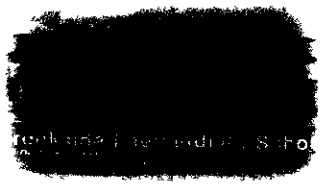	**Creekside Intermediate School Gym (North), 4320 West Main, League City 77573**	Yes	Yes	WE HAVE USED THIS FACILITY NUMEROUS TIMES BEFORE WITHOUT ANY ISSUES	41	**4**	1
	Friendswood City Hall 910 S Friendswood Drive, Friendswood 77546	Yes	Yes	WE HAVE USED THIS FACILITY NUMEROUS TIMES IT IS A CENTRAL LOCATION AND IS OFTEN CROWDED BECAUSE OF HEAVY TURNOUTS	43	**4**	2

[redacted]	**Calder Road Annex** **174 Calder Road** **League City**	Yes	**Hard** **Wired**	USED NUMEROUS TIMES WITH NO ISSUES	3
[redacted]	**Justice Center (2nd Floor)** **600 59th Street** **Galveston 77551**	Yes	**Hard** **Wired**	REQUIRED MAIN VOTING LOCATION	

PROPOSED NOVEMBER 6, 2012 ELECTION DAY VOTE CENTER LOCATIONS & ANALYSIS

Image of Location	Facility and Location	ADA	MiFi	Comments	Number	District	
	Joe Faggard Community Center, 1700 Highway 87, Crystal Beach 77650	Yes REP	Yes	ADA COMPLIANT AND MIFI CONNECTION IS GOOD	1	**1**	1
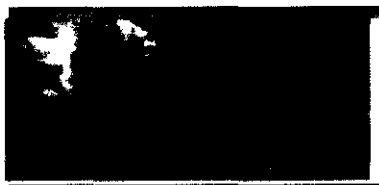	**Transitional Learning Center, 1502 Post Office Street, Galveston 77550**	Yes DEM	Yes	ADA COMPLIANT WITH RAMP ON SIDE OF BUILDING MIFI IS OK BY WINDOW	2	**3**	1
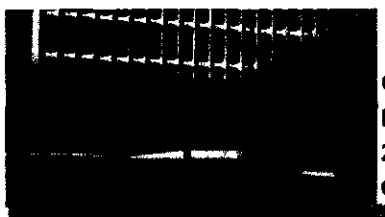	**Galveston County Court House, 722 Moody, 2nd Floor, Galveston 77550**	Yes DEM See Note	**Hard Wired**	Requires some remedies to make it ADA compliant and has poor MiFi Connectivity	3	**3**	2
	Gulf Breeze Apts, 1211 Moody, Galveston 77550	Yes DEM See Note	Yes	Compliant only if the facility will allow the back entrance to remain open	4	**3**	3
	Island Community Center, 4700 Broadway, Galveston 77551	Yes DEM	Yes	WE HAVE USED THIS LOCATION A NUMBER OF TIMES WITH GOOD SUCCESS	5	**3**	4

Image of Location	Facility and Location	ADA	MiFi	Comments	Number	District	
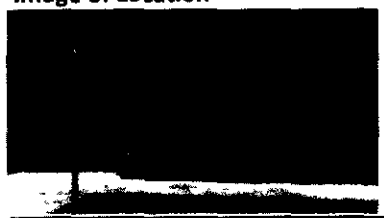	**Old Central Cultural Center, 1310 27th Street, Galveston 77550**	Yes DEM	Yes	NEED TO MAKE SURE THE BACK DOOR WHERE THE RAMP IS, REMAINS UNLOCKED WHILE THE POLLS ARE OP,EN	6	**3**	5
	L A Morgan Elementary, 1410 37th Street, Galveston 77550	Yes DEM	Yes	SHOULD RESERVE PARKING FOR VOTERS OTHERWISE PARKING MAY BE AN ISSUE FOR THE VOTERS	7	**3**	6
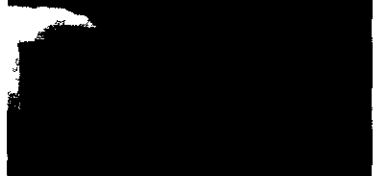	**Moody Methodist Church, Fellowship Hall, 2803 53rd Street, Galveston 77551**	Yes DEM	Yes	GOOD ACCESS AND PLENTY OF PARKING IS AVAILABLE HAS PUSH BUTTON HANDICAPPED DOOR AT END OF RAMP	8	**2**	1
	Weis Middle School, 7100 Steward Road, Galveston 77551	Yes DEM	Yes	ONE HANDICAPPED SPACE WILL BE RESERVED FOR DIABELED VOTERS AT SIDE OF THE BUILDING, POLLING LOCATION TO BE AT FRONT OF SCHOOL	9	**2**	2
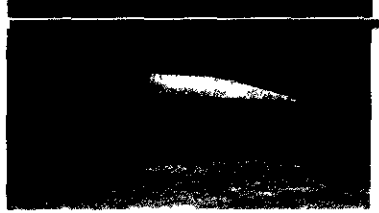	**Seaside Baptist Church, 16534 Termini-San Luis Pass Rd, Jamaica Beach 77554**	Yes REP	Yes	WE HAVE USED THIS LOCATION A NUMBER OF TIMES WITH GOOD SUCCESS	10	**2**	3

Image of Location	Facility and Location	ADA	MiFi	Comments	Number	District	
	Bayou Vista Community Center, 783 C Marlin Street, Bayou Vista 77563	Yes REP	Yes	WE HAVE USED THIS LOCATION A NUMBER OF TIMES WITH GOOD SUCCESS	11	**2**	4
	Greater St. Matthews Baptist Church, Foyer, 6333 Highway 6, Hitchcock 77563	Yes DEM	Yes	NEED TO USE THE FOYER OF THE MAIN CHURCH AND TO SET UP TEMPORARY DISABLED PARKING UNDER THE COVERED FOYER ENTRANCE	12	**3**	7
	Camp Good News, 6205 Delaney Road, Hitchcock 77563	Yes REP	Yes	WE HAVE USED THIS LOCATION A NUMBER OF TIMES WITH GOOD SUCCESS	13	**2**	5
	West County Building, Court Room, 11730 Highway 6, Santa Fe 77510	Yes REP	**Hard Wired**	WE HAVE USED THIS LOCATION A NUMBER OF TIMES WITH GOOD SUCCESS	14	**2**	6
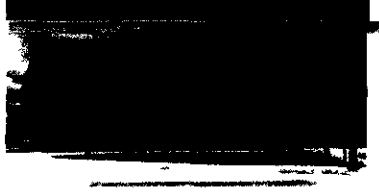	**Santa Fe High School Auditorium Foyer, 16000 Highway 6, Santa Fe 77517**	Yes REP	Yes	NEW BUILDING AT A LOCATION WE USED IN NOVEMBER 2011 PROMISED RESERVED PARKING	15	**2**	7

Image of Location	Facility and Location	ADA	MiFi	Comments	Number	District	
	Runge Park Community Center, 4605 Peck Avenue, Santa Fe 77517	Yes REP	Yes	WE HAVE USED THIS LOCATION A NUMBER OF TIMES WITH GOOD SUCCESS	16	**2**	8
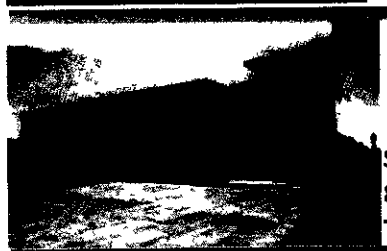	**Sanders Center, 801 Third Avenue South, Texas City 77590**	Yes DEM	Yes	SIMILAR TO CARVER PARK WHICH WE HAVE USED BEFORE	17	**3**	8
	Nessler Center 2010 Fifth Avenue North, Texas City 77590	Yes DEM	Yes	WE HAVE USED THIS LOCATION A NUMBER OF TIMES WITH GOOD SUCCESS	18	**3**	9
	Calvary Baptist Church, 517 18th Avenue North, Texas City 77590	Yes REP	Yes	PARKING PLACE TO BE SET UP AND SIGNS DESIGNATING THE ROUTE FOR DISABLED VOTERS TO ACCESS THE POLLING	19	**1**	2
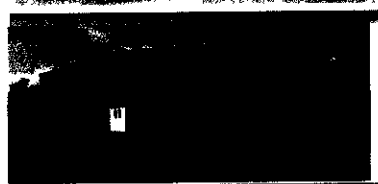	**Northside Baptist Church, 2801 Logan, Texas City 77590**	Yes DEM	Yes	REQUIRES SPECIAL SIGNS DIRECTING DISABLED VOTERS INTO THE GARAGE AND THEN INTO THE POLLING LOCATION	20	**1**	3
	Galveston County Building 2516 Texas Ave, Texas City 77590	Yes DEM	**Hard Wired**	THE SINGLE HANDICAPPED PARKING SPOT OUT FRONT NEEDS TO BE RESERVED FOR DISABLED VOTERS	21	**3**	10

Image of Location	Facility and Location	ADA	MiFi	Comments	Number	District	
	College of the Mainland, ***Fine Arts/Music Building Foyer*** **1200 Amburn Road, Texas City 77591**	Yes DEM	Yes	*WE USED THIS LOCATION* AND BUILDING IN NOV 2011 IT IS SMALL BUT ACCESSIBLE WITH PARKING CLOSE AT HAND	22	**3**	11
	Carver Park Center "Carter Room" 6415 Park Avenue, Texas City 77591	Yes DEM	Yes	WE HAVE USED THIS LOCATION NUMEROUS TIMES BEFORE REQUIRES THE MIFI TO BE PLACED NEAR THE WINDOW FOR GOO RECEPTION BUT *OTHERWISE IT IS GOOD*	23	**3**	12
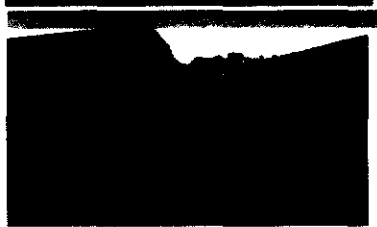	**La Marque City Hall Community Room 1109 Bayou Road La Marque 77568**	Yes DEM	Yes	WE HAVE USED THIS LOCATION NUMEROUS TIMES BEFORE PLACE-MENT OF MIFI UNIT NEAR THE DOOR IS CRITICAL FOR GOOD RECEPTION	24	**3**	13
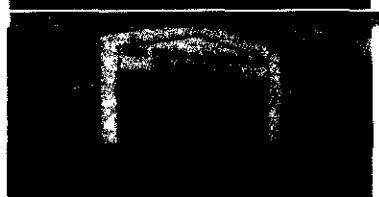	**Greater Barbours Chapel Baptist Church** ***7420 Vauthier Road,*** **La Marque 77568**	Yes DEM	Yes	SUGGESTED BY NAACP PRESIDENT DOTTIE JONES, LARGE ROOM, OUTSIDE *ENTRANCE, NEED TO SET UP* DISABLED PARKING	25	**3**	14
	Dickinson High School Auditorium Entrance, 3800 Baker Drive, Dickinson 77539	Yes REP	Yes	WE HAVE USED THIS LOCATION NUMEROUS TIMES BEFORE NEED TO RESERVE PARKING FOR VOTERS	26	**1**	4

Image of Location	Facility and Location	ADA	MiFi	Comments	Number	District	
	Dickinson City Hall, Council Chambers, 4403 Highway 3, Dickinson 77539	Yes REP	Yes	NEW LOCATION HAS GOOD RECEPTION, IS ADA ACCESSIBLE, AND HAS A LARGE ROOM AMPLE PARKING AVAILABLE	27	**3**	15
	Dickinson Community Center, 2714 Highway 3, Dickinson 77539	Yes DEM	**Hard Wired**	WE HAVE USED THIS LOCATION NUMEROUS TIMES NEED TO RESERVE ONE OF THE DISABLED PARKING SPACES FOR VOTERS	28	**3**	16
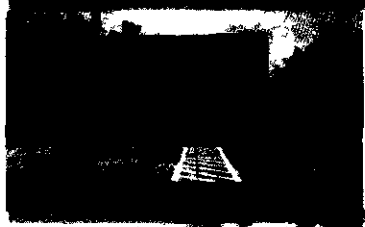	**Bay Colony Elementary School 101 Bay Colony Elementary @ Highway 646, League City 77539**	Yes REP	Yes	THIS LOCATION USED FOR THE MAY PRIMARY AND JUNE RUNOFF ELECTION	29	**2**	9
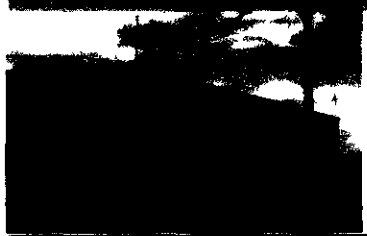	**San Leon Volunteer Fire Department, 12th Street & Avenue D, San Leon 77539**	Yes REP	Using VFD DSL to connect	MIFI CONNECTION IS POOR SO WE HAVE TESTED THE FVD's DSL LINE WILL REQUIRE A SPLITTER AND ETHERNET CABLES TO SERVE TWO E-POLL BOOKS	30	**1**	5
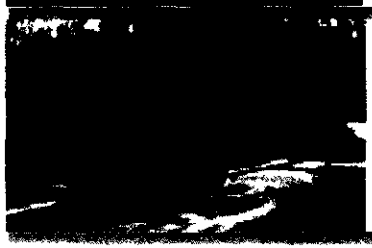	**Bacliff Community Center, 4503 11th Steet, Bacliff 77518**	Yes REP	**Hard Wired**	WE HAVE USED THIS LOCATION NUMEROUS TIMES NEED TO DO SOME SPECIAL THINGS FOR ADA COMPLIANCE BUT NOT A MAJOR ISSUE	31	**1**	6

Image of Location	Facility and Location	ADA	MiFi	Comments	Number	District	
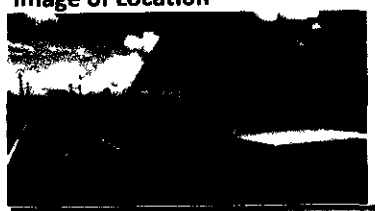	**New Hope Baptist Church 3610 FM 646 E (4904 Live Oak Drive) Dickinson 77539**	Yes REP	Yes	SUGGESTED BY DEMOCRATS TO REPLACE VFW HALL HAS PLENTY OF PARKING	32	?	
	Kemah Civic Center, 800 Harris Avenue @ Highway 146, Kemah 77575	Yes REP	Yes	WE HAVE USED THIS SITE SEVERAL TIMES AND HAVE FOUND IT TO BE GOOD WITH EASY ACCESS FOR VOTERS	33	1	7
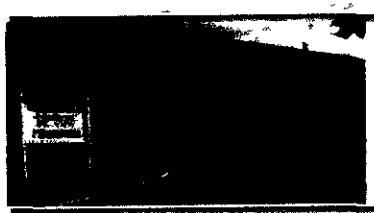	**Harborview Care Center, 300 Enterprise Avenue, League City 77573**	Yes REP	Fair	WE HAVE USED THIS LOCATION BEFORE MAY NEED TO RESERVE PARKING FOR VOTERS	34	1	8
	League City Civic Center, Rooms 1 & 2, 400 West Walker, League City 77573	Yes REP	Yes	THIS SITE HAS BEEN USED NUMEROUS TIMES AND HAS NOT PRESENTED ANY ISSUES	35	4	1
	League City Intermediate, Cafeteria 2588 Webster Street, League City 77573	Yes REP	Yes	USED IN THE PRIMARY ELECTION 2010 AND 2012	36	4	2
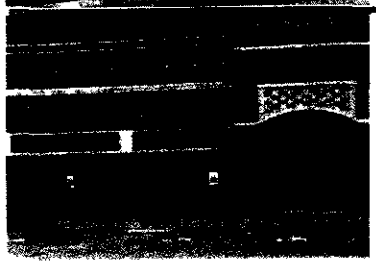	**Victory Lakes Intermediate School, Practice Gym, 2880 West Walker, League City 77573**	Yes REP	Yes	THIS LOCATION HAS BEEN CHECKED AND MEETS OUR REQUIREMENTS IT SERVES THE SOUTHERN PART OF LEAGUE CITY	37	4	3

Image of Location	Facility and Location	ADA	MiFi	Comments	Number	District	
	Clear Creek Intermediate School, Hallway Entrance, 2305 East Main Street, League City 77573	Yes REP	Yes	WE HAVE USED THIS FACILITY NUMEROUS TIMES PREVIOUSLY	38	**1**	9
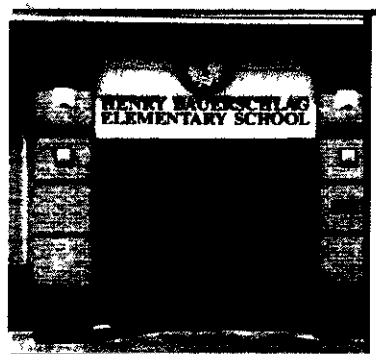	**Bauerschlag Elementary School,** ***(Back of the Library),*** **2051 Brittany Bay Blvd. League City 77573**	Yes REP	Yes	WE HAVE USED THIS FACILITY NUMEROUS TIMES BEFORE THE MIFI UNIT MAY NEED TO BE PLACED NEAR THE DOOR TO IMPROVE CONNECTIVITY	39	**4**	4
	Dominion Church 401 Landing Blvd. League City 77573	Yes REP	Yes	WE HAVE USED THIS FACILITY NUMEROUS TIMES BEFORE SOME SPECIAL INSTRUCTIONS WILL BE PROVIDED FOR SAFETY AND ACCESSIBILITY	40	**4**	5
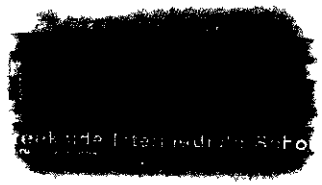	**Creekside Intermediate School Gym (North), 4320 West Main, League City 77573**	Yes REP	Yes	WE HAVE USED THIS FACILITY NUMEROUS TIMES BEFORE WITHOUT ANY ISSUES	41	**4**	6

Image of Location	Facility and Location	ADA	MiFi	Comments	Number	District	
	AMOCO Federal Credit Union, Community Room, 235 East Parkwood Ave, Friendswood 77546	Yes REP	Yes	WE HAVE USED THIS FACILITY NUMEROUS TIMES IT RELEIVES SOME OF THE CROWDING AT CITY HALL AND HAS AN OUSIDE ENTRANCE SEPARATE FROM THAT USED BY BANK CUSTOMERS	42	**4**	7
	Friendswood City Hall 910 S. Friendswood Drive, Friendswood 77546	Yes REP	Yes	WE HAVE USED THIS FACILITY NUMEROUS TIMES IT IS A CENTRAL LOCATION AND IS OFTEN CROWDED BECAUSE OF HEAVY TURNOUTS	43	**4**	8
	Friendswood Church of Christ Rooms 15 & 16, 2051 Parkwood Avenue, Friendswood 77546	Yes REP	Yes	WE HAVE USED THIS LOCATION NUMEROUS TIMES IT COVERS THE WEST SIDE OF FRIENDSWOOD	44	**4**	9
	Old Friendswood Junior High School, 402 Laurel, Friendswood 77546	Yes REP	Yes	NEW LOCATION SUGGESTED BY FRIENDSWOOD ISD WILL PROVIDE SOME RELIEF FOR THE CITY HALL LOCATION	45	**4**	10
COMMISSIONER'S PRECINCTS	**DOYLE 10** **O'BRIEN: 9** **HOLMES: 16** **CLARK : 10**	**27** **18**	**REP** **DEM**	**ELECTION DAY JUDGES**			

AGENDA ITEM #9

GALVESTON COUNTY

ELIGIBLE 457 PROTOTYPE PLAN

GALVESTON
COUNTY

ELIGIBLE 457 PROTOTYPE PLAN
AND
TRUST AGREEMENT

2	SALARY REDUCTION CONTRIBUTIONS/EMPLOYER CONTRIBUTIONS ADOPTION AGREEMENT
3	AMENDMENT FOR PENSION PROTECTION ACT OF 2006 AND OTHER LAW CHANGES (457 (b) Plan)
4	
5	
6	
7	
8	

GALVESTON COUNTY
ELIGIBLE 457 PROTOTYPE PLAN
AND
TRUST AGREEMENT

ELIGIBLE 457 PROTOTYPE PLAN AND TRUST AGREEMENT

The County of Galveston, Texas (the "Employer") hereby adopts this Eligible 457 Prototype Plan, which McAfee & Taft, in its capacity as Eligible 457 Prototype Plan Sponsor, established and intended to be an "eligible deferred compensation plan" as defined in Code §457(b) of the Internal Revenue Code of 1986, as amended The Employer has established a Plan and if applicable, a Trust under this Eligible 457 Prototype Plan by executing an Adoption Agreement The Employer adopts this Plan as a restated Plan in substitution for, and in amendment of, an existing plan, and therefore, the provisions of this Plan, as a restated Plan, apply solely to an Employee on or after the restated Effective Date of the Employer's Plan If an Employee incurs a Severance from Employment prior to the restated Effective Date, that Employee is entitled to benefits under the Plan as the Plan existed on the date of the Employee's Severance from Employment

ARTICLE I
DEFINITIONS

1 01 **"Account"** means the separate Account(s) which the Plan Administrator or the Trustee maintains under the Plan for a Participant's Deferred Compensation The Plan Administrator or Trustee may establish separate Accounts for multiple Beneficiaries of a Participant to facilitate required minimum distributions under Section 4 03 based on each Beneficiary's life expectancy

1 02 **"Accounting Date"** means the last day of the Plan Year The Plan Administrator will allocate Employer contributions and forfeitures for a particular Plan Year as of the Accounting Date of that Plan Year, and on such other dates, if any, as the Plan Administrator determines, consistent with the Plan's allocation conditions and other provisions

1 03 **"Beneficiary"** means a person who the Plan or a Participant designates and who is or may become entitled to a Participant's Account upon the Participant's death A Beneficiary who becomes entitled to a benefit under the Plan remains a Beneficiary under the Plan until the Plan Administrator or Trustee has fully distributed to the Beneficiary his/her Plan benefit A Beneficiary's right to (and the Plan Administrator's or a Trustee's duty to provide to the Beneficiary) information or data concerning the Plan does not arise until the Beneficiary first becomes entitled to receive a benefit under the Plan

1 04 **"Code"** means the Internal Revenue Code of 1986, as amended

1 05 **"Compensation"** for purposes of allocating Deferral Contributions means W-2 wages plus Elective Contributions Any reference in this Plan to Compensation is a reference to the definition in this Section 1 05 unless the Plan reference specifies a modification to this definition or the Employer in the Adoption Agreement elects a modification The Plan Administrator will take into account only Compensation actually paid for the relevant period A Compensation payment includes Compensation paid by the Employer through another person under the common paymaster provisions in Code §§3121 and 3306 See Section 1 15 as to Compensation for an Independent Contractor Compensation also includes any amount that the Internal Revenue Service in published guidance declares to constitute compensation for purposes of a 457 Plan

(A) "W-2 Wages" W-2 wages means wages for federal income tax withholding purposes, as defined under Code §3401(a), plus all other payments to an Employee in the course of the Employer's trade or business, for which the Employer must furnish the Employee a written statement under Code §§6041, 6051 and 6052, but determined without regard to any rules that limit the remuneration included in wages based on the nature or location of the employment or services performed (such as the exception for agricultural labor in Code §3401(a)(2))

(B) Modification to Compensation. The Employer must specify in its Adoption Agreement the Compensation the Plan Administrator is to take into account in allocating Deferral Contributions to a Participant's Account For all Plan Years other than the Plan Year in which the Employee first becomes a Participant, the Plan Administrator will take into account only the Compensation determined for the portion of the Plan Year in which the Employee actually is a Participant

(C) Elective Contributions Compensation under Section 1 05 includes Elective Contributions unless the Employer in its Adoption Agreement elects to exclude Elective Contributions "Elective Contributions" are amounts excludible from the Employee's gross income under Code §§125, 132(f)(4), 402(e)(3), 402(h)(1)(B), 403(b), 408(p) or 457, and contributed by the Employer, at the Employee's election, to a cafeteria plan, a qualified transportation fringe benefit plan, a 401(k) arrangement, a SARSEP, a tax-sheltered annuity, a SIMPLE plan or a Code §457 plan

1 06 **"Deferral Contributions"** means as the Employer elects in Adoption Agreement Section 3 01, Salary Reduction Contributions, Nonelective Contributions and Matching Contributions The Plan

© Copyright 2005 SunGard

Administrator in applying the Code §457(b) limit will take into account Deferral Contributions in the Taxable Year in which deferred, or if later, in the Taxable Year in which the Deferral Contributions are no longer subject to a Substantial Risk of Forfeiture The Plan Administrator in determining the amount of a Participant's Deferral Contributions disregards the net income, gain and loss attributable to Deferral Contributions unless the Deferral Contributions are subject to a Substantial Risk of Forfeiture If a Deferral Contribution is subject to a Substantial Risk of Forfeiture, the Plan Administrator takes into the Deferral Contribution as adjusted for allocable net income, gain or loss in the Taxable Year in which the Substantial Risk of Forfeiture lapses

1 07 **"Deferred Compensation"** means as to a Participant the amount of Deferral Contributions, Rollover Contributions and Transfers adjusted for allocable net income, gain or loss, in the Participant's Account

1 08 **"Effective Date"** of this Plan is the date the Employer specifies in the Adoption Agreement The Employer in the Adoption Agreement may elect special effective dates for Plan provisions the Employer specifies provided any such date(s) are permitted by the Code, by Treasury regulations, or by other applicable guidance

1 09 **"Employee"** means an individual who provides services for the Employer, as a common law employee of the Employer The Employer in its Adoption Agreement must elect or specify any Employee, or class of Employees, not eligible to participate in the Plan (an "Excluded Employee") See Section 1 15 regarding potential treatment of an Independent Contractor as an Employee

1 10 **"Employer"** means the County of Galveston, Texas

1 11 **"Employer Contribution"** means Nonelective Contributions or Matching Contributions

1 12 **"ERISA"** means the Employee Retirement Income Security Act of 1974, as amended

1 13 **"Excess Deferrals"** means Deferral Contributions to a Governmental Eligible 457 Plan or to a Tax-Exempt Organization Eligible 457 Plan for a Participant that exceed the Taxable Year maximum limitation of Code §§457(b) and (e)(18)

1 14 **"Includible Compensation"** means, for the Employee's Taxable Year, the Employee's total Compensation within the meaning of Code §415(c)(3) paid to an Employee for services rendered to the Employer Includible Compensation includes Deferral Contributions under the Plan, compensation deferred under any other plan described in Code §457, and any amount excludible from the Employee's gross income under Code §§401(k), 403(b), 125 or 132(f)(4) or any other amount excludible from the Employee s gross income for Federal income tax purposes The Employer will determine Includible Compensation without regard to community property laws

1 15 **"Independent Contractor"** means any individual who performs service for the Employer and who the Employer does not treat as an Employee or a Leased Employee The Employer in the Adoption Agreement may elect to permit Independent Contractors to participate in the Plan To the extent that the Employer permits Independent Contractor participation, references to Employee in the Plan include Independent Contractors and Compensation means the amounts the Employer pays to the Independent Contractor for services, except as the Employer otherwise specifies in its Adoption Agreement

1 16 **"Leased Employee"** means an Employee within the meaning of Code §414(n)

1 17 **"Matching Contribution"** means an Employer fixed or discretionary contribution made or forfeiture allocated on account of Salary Reduction Contributions

1 18 **"Nonelective Contribution"** means an Employer fixed or discretionary contribution not made as a result of a Salary Reduction Agreement and which is not a Matching Contribution

1 19 **"Normal Retirement Age"** means the age the Employer specifies in the Adoption Agreement consistent with Section 3 05(B)

1 20 **"Participant"** is an Employee other than an Excluded Employee who becomes a Participant in accordance with the provisions of Section 2 01

1 21 **"Plan"** means the 457 plan established or continued by the Employer in the form of this basic Plan and (if applicable) Trust Agreement, including the Adoption Agreement under which the Employer has elected to participate in this Eligible 457 Prototype Plan The Employer in the Adoption Agreement must designate the name of the Plan The Plan maintained by each adopting Employer is a separate Plan, independent from the plan of any other Employer adopting this Eligible 457 Prototype Plan All section references within the Plan are Plan section references unless the context clearly indicates otherwise

1 22 **"Plan Administrator"** is the Employer unless the Employer designates another person to hold the position of Plan Administrator The Plan Administrator may be a Participant

1 23 **"Plan Entry Date"** means the dates the Employer elects in Adoption Agreement Section 2 01

1 24 **"Plan Year"** means the consecutive 12-month period the Employer elects in the Adoption Agreement

1 25 **"Rollover Contribution"** means the amount of cash or property which an eligible retirement plan described in Code §402(c)(8)(B) distributes to an eligible Employee or to a Participant in an eligible rollover distribution under Code §402(c)(4) and which the eligible Employee or Participant transfers directly or indirectly to a Governmental Eligible 457 Plan A Rollover Contribution includes net income, gain or loss attributable to the Rollover Contribution A Rollover Contribution excludes after-tax Employee contributions, as adjusted for net income, gain or loss

1 26 **"Salary Reduction Agreement"** means a written agreement between a Participant and the Employer, by which the Employer reduces the Participant's Compensation for Compensation not available as of the date of the election and contributes the amount as a Salary Reduction Contribution to the Participant's Account

1 27 **"Salary Reduction Contribution"** means a contribution the Employer makes to the Plan pursuant to a Participant's Salary Reduction Agreement

1 28 **"Service"** means any period of time the Employee is in the employ of the Employer In the case of an Independent Contractor, Service means any period of time the Independent Contractor performs services for the Employer on an independent contractor basis An Employee or Independent Contractor terminates Service upon incurring a Severance from Employment

(A) Qualified Military Service. Service includes any qualified military service the Plan must credit for contributions and benefits in order to satisfy the crediting of Service requirements of Code §414(u) A Participant whose employment is interrupted by qualified military service under Code §414(u) or who is on a leave of absence for qualified military service under Code §414(u) may elect to make additional Salary Reduction Contributions upon resumption of employment with the Employer equal to the maximum Deferral Contributions that the Participant could have elected during that period if the Participant's employment with the Employer had continued (at the same level of Compensation) without the interruption of leave, reduced by the Deferral Contributions, if any, actually made for the Participant during the period of the interruption or leave This right applies for five years following the resumption of employment (or, if sooner, for a period equal to three times the period of the interruption or leave) The Employer shall make appropriate make-up Nonelective Contributions and Matching Contributions for such a Participant as required under Code §414(u) The Plan shall apply limitations of Article III to all Deferral Contributions under this paragraph with respect to the year to which the Deferral Contribution relates

(B) "Continuous Service" as the Adoption Agreement describes means Service with the Employer during which the Employee does not incur a Severance from Employment

(C) "Severance from Employment."

(1) **Employee.** An Employee has a Severance from Employment when the Employee ceases to be an Employee of the Employer A Participant does not incur a Severance from Employment if, in connection with a change in employment, the Participant's new employer continues or assumes sponsorship of the Plan or accepts a Transfer of Plan assets as to the Participant

(2) **Independent Contractor.** An Independent Contractor has a Severance from Employment when the contract(s) under which the Independent Contractor performs services for the Employer expires (or otherwise terminates), unless the Employer anticipates a renewal of the contractual relationship or the Independent Contractor becoming an Employee The Employer anticipates renewal if it intends to contract for the services provided under the expired contract and neither the Employer nor the Independent Contractor has eliminated the Independent Contractor as a potential provider of such services under the new contract Further, the Employer intends to contract for services conditioned only upon the Employer's need for the services provided under the expired contract or the Employer's availability of funds Notwithstanding the preceding provisions of this Section 1 30, the Plan Administrator will consider an Independent Contractor to have incurred a Severance from Employment (a) if the Plan Administrator or Trustee will not pay any Deferred Compensation to an Independent Contractor who is a Participant before a date which is at least twelve months after the expiration of the Independent Contractor's contract (or the last to expire of such contracts) to render Services to the Employer, and (b) if before the applicable twelve-month payment date, the Independent Contractor performs Service as an Independent Contractor or as an Employee, the Plan Administrator or Trustee will not pay to the Independent Contractor his/her Deferred Compensation on the applicable date

© Copyright 2005 SunGard

1 29 **"State"** means (a) one of the 50 states of the United States or the District of Columbia, or (b) a political subdivision of a State, or any agency or instrumentality of a State or its political subdivision A State does not include the federal government or any agency or instrumentality thereof

1 30 A **"Substantial Risk of Forfeiture"** exists if the Plan expressly conditions a Participant's right to Deferred Compensation upon the Participant's future performance of substantial Service for the Employer

1 31 **"Tax-Exempt Organization"** means any tax-exempt organization other than a governmental unit or a church or qualified church-controlled organization within the meaning of Code §3121(w)(3)

1 32 **"Taxable Year"** means the calendar year or other taxable year of a Participant

1 33 **"Transfer"** means a transfer of Eligible 457 Plan assets to another Eligible 457 Plan which is not a Rollover Contribution and which is made in accordance with Section 9 03

1 34 **"Trust"** means the Trust created under the adopting Employer's Plan The Trust created and established under the adopting Employer's Plan is a separate Trust, independent of the trust of any other Employer adopting this Eligible 457 Prototype Plan A Trust required under a Governmental Eligible 457 Plan is subject to Article VIII Any Trust under a Tax-Exempt Organization Eligible 457 Plan is subject to Section 5 09

1 35 **"Trustee"** means the person or persons who as Trustee execute the Employer's Adoption Agreement, or any successor in office who in writing accepts the position of Trustee

1 36 **Type of 457 Plan.** The Employer in the Adoption Agreement must specify both the sponsor type and plan type from the following

(A) "Governmental Eligible 457 Plan" means an Eligible 457 Plan established by a State

(B) "Tax-Exempt Organization Eligible 457 Plan" means an Eligible 457 Plan established by a Tax-Exempt Organization

(C) "Eligible 457 Plan" means a plan which satisfies the requirements of Code §457(b) and Treas Reg §§1 457-3 through -10

1 37 **"Vested"** means a Participant's Deferral Contributions that are not subject to a Substantial Risk of Forfeiture, including a vesting schedule

ARTICLE II
PARTICIPATION IN PLAN

2 01 ELIGIBILITY Each Employee who is not an Excluded Employee becomes a Participant in the Plan in accordance with the eligibility conditions and as of the Plan Entry Date the Employer elects in its Adoption Agreement If this Plan is a restated Plan, each Employee who was a Participant in the Plan on the day before the Effective Date continues as a Participant in the Plan, irrespective of whether he/she satisfies the eligibility conditions in the restated Plan, unless the Employer indicates otherwise in the Adoption Agreement

2 02 PARTICIPATION UPON RE-EMPLOYMENT A Participant who incurs a Severance from Employment will re-enter the Plan as a Participant on the date of his/her re-employment An Employee who satisfies the Plan's eligibility conditions but who incurs a Severance from Employment prior to becoming a Participant will become a Participant on the later of the Plan Entry Date on which he/she would have entered the Plan had he/she not incurred a Severance from Employment or the date of his/her re-employment Any Employee who incurs a Severance from Employment prior to satisfying the Plan's eligibility conditions becomes a Participant in accordance with Adoption Agreement Section 2 01

2 03 CHANGE IN EMPLOYEE STATUS If a Participant has not incurred a Severance from Employment but ceases to be eligible to participate in the Plan, by reason of becoming an Excluded Employee, the Plan Administrator must treat the Participant as an Excluded Employee during the period such a Participant is subject to the Adoption Agreement exclusion The Plan Administrator determines a Participant's sharing in the allocation of Employer Contributions by disregarding his/her Compensation paid by the Employer for services rendered in his/her capacity as an Excluded Employee However, during such period of exclusion, the Participant, without regard to employment classification, continues to share fully in Plan income allocations under Section 5 07 and to accrue vesting service if applicable

ARTICLE III
DEFERRAL CONTRIBUTIONS/LIMITATIONS

3 01 AMOUNT

(A) Contribution Formula For each Plan Year, or other period the Employer specifies in the Adoption Agreement, the Employer will contribute to the Plan

the type and amount of Deferral Contributions the Employer elects in its Adoption Agreement

(B) Return of Contributions. The Employer contributes to this Plan on the condition its contribution is not due to a mistake of fact If the Plan has a Trust, the Trustee, upon written request from the Employer, must return to the Employer the amount of the Employer's contribution (adjusted for net income, gain or loss) made by the Employer on account of a mistake of fact The Trustee will not return any portion of the Employer's contribution under the provisions of this paragraph more than one year after the Employer made the contribution on account of a mistake of fact In addition, if any Participant Salary Reduction Contribution is due to a mistake of fact, the Employer or the Trustee upon written request from the Employer shall return the Participant's contribution (adjusted for net income, gain or loss), within one year after payment of the contribution

The Trustee will not increase the amount of the Employer contribution returnable under this Section 3 01 for any earnings attributable to the contribution, but the Trustee will decrease the Employer contribution returnable for any losses attributable to it The Trustee may require the Employer to furnish it whatever evidence the Trustee deems necessary to enable the Trustee to confirm the amount the Employer has requested be returned is properly returnable

(C) Time of Payment of Contribution. If the Plan has a Trust, the Employer may pay its contributions for each Plan Year to the Trust in one or more installments and at such time(s) as the Employer determines, without interest A Governmental Employer shall deposit Salary Reduction Contributions to the Trust within a period that is not longer than is reasonable for the administration of Participant Accounts

3 02 SALARY REDUCTION CONTRIBUTIONS The Employer in the Adoption Agreement must elect whether the Plan permits Salary Reduction Contributions, and also the Plan limitations, if any, which apply to Salary Reduction Contributions Unless the Employer elects otherwise in the Adoption Agreement, all such limitations apply on a payroll basis

(A) Deferral from Sick, Vacation and Back Pay The Employer in the Adoption Agreement must elect whether to permit Participants to make Salary Reduction Contributions from accumulated sick pay, from accumulated vacation pay or from back pay

(B) Automatic Enrollment. The Employer in the Adoption Agreement may provide for automatic Salary Reduction Contributions of a specified amount, subject to giving notice to affected Participants of the automatic election and of their right to make a contrary election

(C) Application to Leave of Absence and Disability. Unless a Participant in his/her Salary Reduction Agreement elects otherwise, the Participant's Salary Reduction Agreement shall continue to apply during the Participant's leave of absence or the Participant's disability (as the Plan Administrator shall establish), if the Participant has Compensation other than imputed compensation or disability benefits

3 03 MATCHING CONTRIBUTIONS The Employer in the Adoption Agreement must elect whether the Plan permits Matching Contributions and, if so, the type(s) of Matching Contributions, the time period applicable to any Matching Contribution formula, and as applicable, the amount of Matching Contributions and the Plan limitations, if any, which apply to Matching Contributions Any Matching Contributions apply to Normal Retirement Age catch-up contributions and to age 50 catch-up contributions, if any, unless the Employer elects otherwise in the Adoption Agreement

3 04 NORMAL LIMITATION Except as provided in Sections 3 05 and 3 06, a Participant's maximum Deferral Contributions (excluding Rollover Contributions and Transfers) under this Plan for a Taxable Year may not exceed the lesser of

(a) The applicable dollar amount as specified under Code §457(e)(15) (or, beginning January 1, 2006) such larger amount as the Commissioner of the Internal Revenue may prescribe), or

(b) 100% of the Participant's Includible Compensation for the Taxable Year

3 05 NORMAL RETIREMENT AGE CATCH-UP CONTRIBUTION For one or more of the Participant's last three Taxable Years ending before the Taxable Year in which the Participant attains Normal Retirement Age, the Participant's maximum Deferral Contributions may not exceed the lesser of

(a) Twice the dollar amount under Section 3 04(a) normal limitation, or (b) the underutilized limitation

(A) Underutilized Limitation. A Participant's underutilized limitation is equal to the sum of (i) the normal limitation for the Taxable Year, and (ii) the normal limitation for each of the prior Taxable Years of the Participant commencing after 1978 during which the Participant was eligible to participate in the Plan and the Participant's Deferral Contributions were subject to the normal limitation or any other Code §457(b) limit, *less* the amount of Deferral

© Copyright 2005 SunGard

Contributions for each such prior Taxable Year, excluding age 50 catch-up contributions

(B) Normal Retirement Age. Normal Retirement Age is the age the Employer specifies in the Adoption Agreement provided that the age may not be (i) earlier than the earliest of age 65 or the age at which Participants have the right to retire and receive under the Employer's defined benefit plan (or money purchase plan if the Participant is not eligible to participate in a defined benefit plan) immediate retirement benefits without actuarial or other reduction because of retirement before a later specified age, or (ii) later than age 70½

(1) **Participant Designation.** The Employer in the Adoption Agreement may permit a Participant to designate his/her Normal Retirement Age as any age including or between the foregoing ages

(2) **Multiple 457 Plans.** If the Employer maintains more than one Eligible 457 Plan, the Plans may not permit any Participant to have more than one Normal Retirement Age under the Plans

(3) **Police and Firefighters.** In a Governmental Eligible 457 Plan with qualified police or firefighter Participants within the meaning of Code §415(b)(2)(H)(ii)(I), the Employer in the Adoption Agreement may elect (or permit the qualified Participants to elect) a Normal Retirement Age as early as age 40 and as late as age 70½

(C) Pre-2002 Coordination. In determining a Participant's underutilized limitation, the Plan Administrator, in accordance with Treas Reg §1 457-4(c)(3)(iv), must apply the coordination rule in effect under now repealed Code §457(c)(2) The Plan Administrator also must determine the normal limitation for pre-2002 Taxable Years in accordance with Code §457(b)(2) as then in effect

3 06 AGE 50 CATCH-UP CONTRIBUTION An Employer sponsoring a Governmental Eligible 457 Plan must specify in the Adoption Agreement whether the Participants are eligible to make age 50 catch-up contributions

If an Employer elects to permit age 50 catch-up contributions, all Employees who are eligible to make Salary Reduction Contributions under this Plan and who have attained age 50 before the close of the Taxable Year are eligible to make age 50 catch-up contributions for that Taxable Year in accordance with, and subject to the limitations of, Code §414(v) Such catch-up contributions are not taken into account for purposes of the provisions of the plan implementing the required limitations of Code §457 If, for a Taxable Year, an Employee makes a catch-up contribution under Section 3 05, the Employee is not eligible to make age 50 catch-up contributions under this Section 3 06 A catch-up eligible Participant in each Taxable Year is entitled to the greater of the amount determined under Section 3 05 or Section 3 06 catch-up amount plus the Section 3 04 normal limitation

3 07 CONTRIBUTION ALLOCATION The Plan Administrator will allocate to each Participant's Account his/her Deferral Contributions The Employer will allocate Employer Nonelective and Matching Contributions to the Account of each Participant who satisfies the allocation conditions in Adoption Agreement Section 3 08 in the following manner

(a) **Fixed match** To the extent the Employer makes Matching Contributions under a fixed Adoption Agreement formula, the Plan Administrator will allocate the Matching Contribution to the Account of the Participant on whose behalf the Employer makes that contribution A fixed Matching Contribution formula is a formula under which the Employer contributes a specified percentage or dollar amount on behalf of a Participant based on that Participant's Salary Reduction Contributions

(b) **Discretionary match.** To the extent the Employer makes Matching Contributions under a discretionary Adoption Agreement formula, the Plan Administrator will allocate the Matching Contributions to a Participant's Account in the same proportion that each Participant's Salary Reduction Contributions taken into account under the formula bear to the total Salary Reduction Contributions of all Participants

(c) **Tiered match.** If the Matching Contribution formula is a tiered formula, the Plan Administrator will allocate separately the Matching Contributions with respect to each tier of Salary Reduction Contributions, in accordance with the tiered formula

(d) **Discretionary nonelective.** The Plan Administrator will allocate discretionary Nonelective Contributions for a Plan Year in the same ratio that each Participant's Compensation for the Plan Year bears to the total Compensation of all Participants for the Plan Year, unless the Employer elects otherwise in the Adoption Agreement

(e) **Fixed nonelective.** The Plan Administrator will allocate fixed Nonelective Contributions for a Plan Year in the same ratio that each Participant's Compensation for the Plan Year bears to the total Compensation of all Participants for the Plan Year, unless the Employer elects otherwise in the Adoption Agreement

3 08 ALLOCATION CONDITIONS The Plan Administrator will determine the allocation conditions applicable to Nonelective Contributions or to Matching Contributions (or to both) in accordance with the Employer's elections in its Adoption

Agreement The Plan Administrator will not allocate to a Participant any portion of an Employer Contribution (or forfeiture if applicable) for a Plan Year or applicable portion thereof in which the Participant does not satisfy the applicable allocation condition(s)

3 09 ROLLOVER CONTRIBUTIONS For taxable years beginning after December 31, 2001, an Employer sponsoring a Governmental Eligible 457 Plan may permit Rollover Contributions

(A) Operational Administration. The Employer, operationally and on a nondiscriminatory basis, may elect to permit or not to permit Rollover Contributions to this Plan or may elect to limit an eligible Employee's right or a Participant's right to make a Rollover Contribution If the Employer permits Rollover Contributions, any Participant (or as applicable, any eligible Employee), with the Employer's written consent and after filing with the Trustee the form prescribed by the Plan Administrator, may make a Rollover Contribution to the Trust Before accepting a Rollover Contribution, the Trustee may require a Participant (or eligible Employee) to furnish satisfactory evidence the proposed transfer is in fact a "Rollover Contribution" which the Code permits an employee to make to a eligible retirement plan The Trustee, in its sole discretion, may decline to accept a Rollover Contribution of property which could (1) generate unrelated business taxable income, (2) create difficulty or undue expense in storage, safekeeping or valuation, or (3) create other practical problems for the Trust

(B) Pre-Participation Rollover. If an eligible Employee makes a Rollover Contribution to the Trust prior to satisfying the Plan's eligibility conditions, the Plan Administrator and Trustee must treat the Employee as a limited Participant (as described in Rev Rul 96-48 or in any successor ruling) A limited Participant does not share in the Plan's allocation of any Employer Contributions and may not make Salary Reduction Contributions until he/she actually becomes a Participant in the Plan If a limited Participant has a Severance from Employment prior to becoming a Participant in the Plan, the Trustee will distribute his/her Rollover Contributions Account to the limited Participant in accordance with Article IV

(C) Separate Accounting. If an Employer permits Rollover Contributions, the Plan Administrator must account separately for (1) amounts rolled into this Plan from an eligible retirement plan (other than from another Governmental Eligible 457 plan), and (2) amounts rolled into this Plan from another Governmental Eligible 457 Plan The Plan Administrator for purposes of ordering any subsequent distribution from this Plan, may designate a distribution from a Participant's Rollover Contributions as coming first from either of (1) or (2) above if the Participant has both types of Rollover Contribution Accounts

3 10 DISTRIBUTION OF EXCESS DEFERRALS In the event that a Participant has Excess Deferrals, the Plan will distribute to the Participant the Excess Deferrals and allocable net income, gain or loss, in accordance with this Section 3 10

(A) Governmental Eligible 457 Plan. The Plan Administrator will distribute Excess Deferrals from a Governmental Eligible 457 Plan as soon as is reasonably practicable following the Plan Administrator's determination of the amount of the Excess Deferral

(B) Tax-Exempt Organization Eligible 457 Plan. The Plan Administrator will distribute Excess Deferrals from a Tax-Exempt Organization Eligible 457 Plan no later than April 15 following the Taxable Year in which the Excess Deferral occurs

(C) Plan Aggregation. If the Employer maintains more than one Eligible 457 Plan, the Employer must aggregate all such Plans in determining whether any Participant has Excess Deferrals

(D) Individual Limitation. If a Participant participates in another Eligible 457 Plan maintained by a different employer, and the Participant has Excess Deferrals, the Plan Administrator may, but is not required, to correct the Excess Deferrals by making a corrective distribution from this Plan

3 11 DEEMED IRA CONTRIBUTIONS A Governmental Employer under an Eligible 457 Plan may elect to permit Participants to make IRA contributions to this Plan in accordance with the Code §408(q) deemed IRA rules, commencing for Plan Years beginning after December 31, 2002 If the Employer elects to permit deemed IRA contributions to the Plan, the Employer will amend the Plan to add necessary IRA language and either the Rev Proc 2003-13 sample deemed IRA language or an appropriate substitute

3 12 DOLLAR LIMITS The table below shows the applicable dollar amounts described in paragraph 3 04(a) and limitations on age 50 catch-up contributions described in Section 3 06 These amounts are adjusted after 2006 for changes in the cost-of-living to the extent permitted in Code §415(d)

Year	Applicable Dollar Amount	Catch-up Contribution Limitation
2002	$11,000	$1,000
2003	$12,000	$2,000
2004	$13,000	$3,000
2005	$14,000	$4,000

© Copyright 2005 SunGard

2006	$15,000	$5,000

ARTICLE IV
TIME AND METHOD OF PAYMENT OF BENEFITS

4 01 DISTRIBUTION RESTRICTIONS Except as the Plan provides otherwise, the Plan Administrator or Trustee may not distribute to a Participant his/her Account prior to one of the following events

(a) The Participant's attaining age 70½,
(b) The Participant's Severance from Employment, or
(c) The Participant's death

4 02 TIME AND METHOD OF PAYMENT OF ACCOUNT The Plan Administrator, or Trustee at the direction of the Plan Administrator, will distribute to a Participant who has incurred a Severance from Employment the Participant's Vested Account under one or any combination of payment methods and at the time(s) the Adoption Agreement specifies If the Adoption Agreement permits more than one time or method, the Plan Administrator, in the absence of a Participant election described below, will determine the time and method applicable to a particular Participant In no event will the Plan Administrator direct (or direct the Trustee to commence) distribution, nor will the Participant elect to have distribution commence, later than the Participant's required beginning date, or under a method that does not satisfy Section 4 03

(A) Participant Election of Time and Method. The Employer in the Adoption Agreement must elect whether to permit Participants to elect the timing and method of distribution of their Account in accordance with this Section 4 02 The Plan Administrator must consent to the specific terms of any such Participant election and the Plan Administrator in its sole discretion may withhold consent Subject to the foregoing conditions, a Participant (1) may elect to postpone/accelerate distribution of his/her Account beyond or prior to the time the Employer has elected in its Adoption Agreement, to any fixed or determinable date including, but not beyond, the Participant's required beginning date, and (2) may elect the method of payment A Participant may elect the timing and method of payment of his/her Account The Plan Administrator must furnish to the Participant a form for the Participant to elect the time and a method of payment

(B) Number of Initial Elections/Subsequent Elections. A Participant may make any number of elections or revoke any prior election under Section 4 02(A)

(C) No Election/Default. If the Participant does not make a timely election regarding the time and method of payment, the Plan Administrator will pay or direct the Trustee to pay the Participant's Account in accordance with the Adoption Agreement

4 03 REQUIRED MINIMUM DISTRIBUTIONS The Plan Administrator may not distribute nor direct the Trustee to distribute the Participant's Account, nor may the Participant elect any distribution his/her Account, under a method of payment which, as of the required beginning date, does not satisfy the minimum distribution requirements of Code §401(a)(9) or which is not consistent with applicable Treasury regulations

(A) General Rules.

(1) **Effective Date.** Unless the Employer specifies a later effective date in the Adoption Agreement, the provisions of this Section 4 03 will apply for purposes of determining required minimum distributions for calendar years beginning with the 2002 calendar year

(2) **Coordination with Minimum Distribution Requirements Previously in Effect** If the effective date of this Section 4 03 is earlier than the 2003 calendar year, required minimum distributions for 2002 under the Plan will be determined as follows If the total amount of 2002 required minimum distributions under the Plan made to the distributee prior to the effective date of this Section 4 03 equals or exceeds the required minimum distributions determined under this Section 4 03, then no additional distributions will be required to be made for 2002 on or after such date to the distributee If the total amount of 2002 required minimum distributions under the Plan made to the distributee prior to the effective date of this Section 4 03 is less than the amount determined under this Section 4 03, the required minimum distributions for 2002 on and after such date will be determined so that the total amount of required minimum distributions for 2002 made to the distributee will be the amount determined under this Section 4 03

(3) **Precedence** The requirements of this Section 4 03 will take precedence over any inconsistent provisions of the Plan

(4) **Requirements of Treasury Regulations Incorporated** All distributions required under this Section 4 03 will be determined and made in accordance with the Treasury regulations under Code §401(a)(9)

(B) Time and Manner of Distribution

(1) **Required Beginning Date.** The Participant's entire interest will be distributed, or

begin to be distributed, to the Participant no later than the Participant's required beginning date

(2) **Death of Participant Before Distribution Begins.** If the Participant dies before distributions begin, the Participant's entire interest will be distributed, or begin to be distributed, no later than as follows

(a) Spouse Designated Beneficiary If the Participant's surviving spouse is the Participant's sole designated Beneficiary, then, except as the Employer may elect in the Adoption Agreement, distributions to the surviving spouse will begin by December 31 of the calendar year immediately following the calendar year in which the Participant dies, or by December 31 of the calendar year in which the Participant would have attained age 70½, if later

(b) Non-Spouse Designated Beneficiary If the Participant's surviving spouse is not the Participant's sole designated Beneficiary, then, except as the Employer may elect in the Adoption Agreement, distributions to the designated Beneficiary will begin by December 31 of the calendar year immediately following the calendar year in which the Participant died

(c) No Designated Beneficiary If there is no designated Beneficiary as of September 30 of the year following the year of the Participant's death, the Participant's entire interest will be distributed by December 31 of the calendar year containing the fifth anniversary of the Participant's death

(d) Death of Spouse If the Participant's surviving spouse is the Participant's sole designated Beneficiary and the surviving spouse dies after the Participant but before distributions to the surviving spouse begin, this Section 4 03(B)(2) other than Section 4 03(B)(2)(a), will apply as if the surviving spouse were the Participant

For purposes of this Section 4 03(B) and Section 4 03(D), unless Section 4 03(B)(2)(d) applies, distributions are considered to begin on the Participant's required beginning date If Section 4 03(B)(2)(d) applies, distributions are considered to begin on the date distributions are required to begin to the surviving spouse under Section 4 03(B)(2)(a) If distributions under an annuity purchased from an insurance company irrevocably commence to the Participant before the Participant's required beginning date (or to the Participant's surviving spouse before the date distributions are required to begin to the surviving spouse under Section 4 03(B)(2)(a), the date distributions are considered to begin is the date distributions actually commence

(3) **Forms of Distribution.** Unless the Participant's interest is distributed in the form of an annuity purchased from an insurance company or in a single sum on or before the required beginning date, as of the first distribution calendar year distributions will be made in accordance with Sections 4 03(C) and 4 03(D) If the Participant's interest is distributed in the form of an annuity purchased from an insurance company, distributions thereunder will be made in accordance with the requirements of Section 4 01(a)(9) of the Code and the Treasury regulations

(C) Required Minimum Distributions during Participant's Lifetime.

(1) **Amount of Required Minimum Distribution for Each Distribution Calendar Year.** During the Participant's lifetime, the minimum amount that will be distributed for each distribution calendar year is the lesser of

(a) ULT The quotient obtained by dividing the Participant's account balance by the number in the Uniform Life Table set forth in Treas Reg §1 401(a)(9)-9, using the Participant's attained age as of the Participant's birthday in the distribution calendar year, or

(b) Younger Spouse If the Participant's sole designated Beneficiary for the distribution calendar year is the Participant's spouse, the quotient obtained by dividing the Participant's account balance by the number in the Joint and Last Survivor Table set forth in Treas Reg §1 401(a)(9)-9, using the Participant's and spouse's attained ages as of the Participant's and spouse's birthdays in the distribution calendar year

(2) **Lifetime Required Minimum Distributions Continue Through Year of Participant's Death.** Required minimum distributions will be determined under this Section 4 03(C) beginning with the first distribution calendar year and up to and including the distribution calendar year that includes the Participant's date of death

(D) Required Minimum Distributions after Participant's Death.

(1) **Death On or After Distributions Begin.**

(a) Participant Survived by Designated Beneficiary If the Participant dies on or after the date distributions begin and there is a designated Beneficiary, the minimum amount that will be distributed for each distribution calendar year after the year of the Participant's death is the quotient obtained by dividing the Participant's account balance by the longer of the remaining life expectancy of the Participant or the remaining life expectancy of the Participant's designated Beneficiary, determined as follows

© Copyright 2005 SunGard

(i) Participant's Life Expectancy The Participant's remaining life expectancy is calculated using the attained age of the Participant as of the Participant's birthday in the calendar year of death, reduced by one for each subsequent calendar year

(ii) Spouse's Life Expectancy If the Participant's surviving spouse is the Participant's sole designated Beneficiary, the remaining life expectancy of the surviving spouse is calculated for each distribution calendar year after the year of the Participant's death using the surviving spouse's age as of the spouse's birthday in that year For distribution calendar years after the year of the surviving spouse's death, the remaining life expectancy of the surviving spouse is calculated using the attained age of the surviving spouse as of the spouse's birthday in the calendar year of the spouse's death, reduced by one for each subsequent calendar year

(iii) Non-Spouse's Life Expectancy If the Participant's surviving spouse is not the Participant's sole designated Beneficiary, the designated Beneficiary's remaining life expectancy is calculated using the attained age of the Beneficiary as of the Beneficiary's birthday in the calendar year following the calendar year of the Participant's death, reduced by one for each subsequent calendar year

(b) No Designated Beneficiary If the Participant dies on or after the date distributions begin and there is no designated Beneficiary as of September 30 of the calendar year after the calendar year of the Participant's death, the minimum amount that will be distributed for each distribution calendar year after the calendar year of the Participant's death is the quotient obtained by dividing the Participant's account balance by the Participant's remaining life expectancy calculated using the attained age of the Participant as of the Participant's birthday in the calendar year of death, reduced by one for each subsequent calendar year

(2) **Death before Date Distributions Begin.**

(a) Participant Survived by Designated Beneficiary Except as the Employer may elect in the Adoption Agreement, if the Participant dies before the date distributions begin and there is a designated Beneficiary, the minimum amount that will be distributed for each distribution calendar year after the year of the Participant's death is the quotient obtained by dividing the Participant's account balance by the remaining life expectancy of the Participant's designated Beneficiary, determined as provided in Section 4 03(D)(1)

(b) No Designated Beneficiary If the Participant dies before the date distributions begin and there is no designated Beneficiary as of September 30 of the year following the year of the Participant's death, distribution of the Participant's entire interest will be completed by December 31 of the calendar year containing the fifth anniversary of the Participant's death

(c) Death of Surviving Spouse Before Distributions to Surviving Spouse Are Required to Begin If the Participant dies before the date distributions begin, the Participant's surviving spouse is the Participant's sole designated Beneficiary, and the surviving spouse dies before distributions are required to begin to the surviving spouse under Section 4 03(B)(2)(a), this Section 4 03(D)(2) will apply as if the surviving spouse were the Participant

(E) Definitions

(1) **Designated Beneficiary.** The individual who is designated as the Beneficiary under the Plan and is the designated beneficiary under Code §401(a)(9) and Treas Reg §1 401(a)(9)-1, Q&A-4

(2) **Distribution calendar year.** A calendar year for which a minimum distribution is required For distributions beginning before the Participant's death, the first distribution calendar year is the calendar year immediately preceding the calendar year which contains the Participant's required beginning date For distributions beginning after the Participant's death, the first distribution calendar year is the calendar year in which the distributions are required to begin under Section 4 03(B)(2) The required minimum distribution for the Participant's first distribution calendar year will be made on or before the Participant's required beginning date The required minimum distribution for other distribution calendar years, including the required minimum distribution for the distribution calendar year in which the Participant's required beginning date occurs, will be made on or before December 31 of that distribution calendar year

(3) **Life expectancy.** Life expectancy as computed by use of the Single Life Table in Treas Reg §1 401(a)(9)-9

(4) **Participant's account balance.** The account balance as of the last valuation date in the calendar year immediately preceding the distribution calendar year (valuation calendar year) increased by the amount of any contributions made and allocated or forfeitures allocated to the account balance as of dates in the valuation calendar year after the valuation date and decreased by distributions made in the valuation calendar year after the valuation date The account balance for the valuation calendar year includes any Rollover Contributions or Transfers to the Plan either in the valuation calendar year or in the distribution calendar year if distributed or transferred in the valuation calendar year

(5) **Required beginning date.** A Participant's required beginning date is the April 1 of the calendar year following the later of (1) the calendar year in which the Participant attains age 70½, or (2) the calendar year in which the Participant retires or such other date under Code §401(a)(9) by which required minimum distributions must commence

4 04 DEATH BENEFITS Upon the death of the Participant, the Plan Administrator must pay or direct the Trustee to pay the Participant's Account in accordance with Section 4 03 Subject to Section 4 03, a Beneficiary may elect the timing and method of payment in the same manner as a Participant may elect under Section 4 02, if such elections apply

4 05 DISTRIBUTIONS PRIOR TO SEVERANCE FROM EMPLOYMENT The Employer must elect in the Adoption Agreement whether to permit in-service distributions of a Participant's Vested Account under this Section 4 05, notwithstanding the Section 4 01 distribution restrictions

(A) Unforeseeable Emergency. In the event of a Participant's unforeseeable emergency, the Plan Administrator may make a distribution to a Participant who has not incurred a Severance from Employment (or who has incurred a Severance but will not begin to receive payments until some future date) In the event of an unforeseeable emergency, the Plan Administrator also may accelerate payments to a Participant or to a Beneficiary The Plan Administrator will establish a policy for determining whether an unforeseeable emergency exists An unforeseeable emergency is a severe financial hardship of a Participant or Beneficiary resulting from (1) illness or accident of the Participant, the Beneficiary, or the Participant's or Beneficiary's spouse or dependent (as defined in Code §152(a)), (2) loss of the Participant's or Beneficiary's property due to casualty, (3) the need to pay for the funeral expenses of the Participant's or Beneficiary's spouse or dependent (as defined in Code §152(a), or (4) other similar extraordinary and unforeseeable circumstances arising from events beyond the Participant's or Beneficiary's control The Plan Administrator will not pay the Participant or the Beneficiary more than the amount reasonably necessary to satisfy the emergency need, which may include amounts necessary to pay taxes or penalties on the distribution The Plan Administrator will not make payment to the extent the Participant or Beneficiary may relieve the financial hardship by cessation of deferrals under the Plan, through insurance or other reimbursement, or by liquidation of the individual's assets to the extent such liquidation would not cause severe financial hardship

(B) De minimis distribution. In accordance with the Employer's Adoption Agreement elections, the Plan Administrator may allow a Participant to elect to receive a distribution or the Plan Administrator will distribute (without a Participant election) any amount of the Participant's Account where (1) the Participant's Account (disregarding Rollover Contributions) does not exceed $5,000 (or such other amount as does not exceed the Code §411(a)(11)(A) dollar amount), (2) the Participant has not made or received an allocation of any Deferral Contributions under the Plan during the two-year period ending on the date of distribution, and (3) the Participant has not received a prior distribution under this Section 4 05(B)

(C) Distribution of Rollover Contributions. The Employer in its Adoption Agreement may elect to permit a Participant to request and to receive distribution of the Participant's Account attributable to Rollover Contributions (but not to Transfers) before the Participant has a distributable event under Section 4 01

4 06 DISTRIBUTIONS UNDER QUALIFIED DOMESTIC RELATIONS ORDERS (QDROs) Notwithstanding any other provision of this Plan, the Employer in its Adoption Agreement may elect to apply the QDRO provisions of this Section 4 06 If Section 4 06 applies, the Plan Administrator (and any Trustee) must comply with the terms of a QDRO, as defined in Code §414(p), which is issued with respect to the Plan

(A) Time and Method of Payment. This Plan specifically permits distribution to an alternate payee under a QDRO at any time, notwithstanding any contrary Plan provision and irrespective of whether the Participant has attained his/her earliest retirement age (as defined under Code §414(p)) under the Plan A distribution to an alternate payee prior to the Participant's attainment of earliest retirement age is available only if the QDRO specifies distribution at that time or permits an agreement between the Plan and the alternate payee to authorize an earlier distribution Nothing in this Section 4 06 gives a Participant a right to receive distribution at a time the Plan otherwise does not permit nor authorizes the alternate payee to receive a form of payment the Plan does not permit

(B) QDRO Procedures. The Plan Administrator must establish reasonable procedures to determine the qualified status of a domestic relations order Upon receiving a domestic relations order, the Plan Administrator promptly will notify the Participant and any alternate payee named in the order, in writing, of the receipt of the order and the Plan's procedures for determining the qualified status of the order Within a reasonable period of time after receiving the domestic relations order, the Plan Administrator must determine the qualified status of the order and must notify the Participant and each alternate payee, in writing, of the Plan Administrator's determination The Plan Administrator must provide notice under this

© Copyright 2005 SunGard

paragraph by mailing to the individual's address specified in the domestic relations order

(C) Accounting. If any portion of the Participant's Account Balance is payable under the domestic relations order during the period the Plan Administrator is making its determination of the qualified status of the domestic relations order, the Plan Administrator must maintain a separate accounting of the amounts payable If the Plan Administrator determines the order is a QDRO within 18 months of the date amounts first are payable following receipt of the domestic relations order, the Plan Administrator will distribute or will direct the Trustee to distribute the payable amounts in accordance with the QDRO If the Plan Administrator does not make its determination of the qualified status of the order within the 18-month determination period, the Plan Administrator will distribute or will direct the Trustee to distribute the payable amounts in the manner the Plan would distribute if the order did not exist and will apply the order prospectively if the Plan Administrator later determines the order is a QDRO

To the extent it is not inconsistent with the provisions of the QDRO, the Plan Administrator may segregate or may direct the Trustee to segregate the QDRO amount in a segregated investment account The Plan Administrator or Trustee will make any payments or distributions required under this Section 4 06 by separate benefit checks or other separate distribution to the alternate payee(s)

4 07 DIRECT ROLLOVER OF ELIGIBLE ROLLOVER DISTRIBUTIONS – GOVERNMENTAL PLAN

(A) Participant Election. A Participant (including for this purpose, a former Employee) in a Governmental Eligible 457 Plan may elect, at the time and in the manner the manner the Plan Administrator prescribes, to have any portion of his/her eligible rollover distribution from the Plan paid directly to an eligible retirement plan specified by the Participant in a direct rollover election For purposes of this election, a "Participant" includes as to their respective interests, a Participant's surviving spouse and the Participant's spouse or former spouse who is an alternate payee under a QDRO

(B) Rollover and Withholding Notice. At least 30 days and not more than 90 days prior to the Trustee's distribution of an eligible rollover distribution, the Plan Administrator must provide a written notice (including a summary notice as permitted under applicable Treasury regulations) explaining to the distributee the rollover option, the applicability of mandatory 20% federal withholding to any amount not directly rolled over, and the recipient's right to roll over within 60 days after the date of receipt of the distribution ("rollover notice")

(C) Default distribution or rollover. Except as provided in Paragraph (D), in the case of a Participant who does not elect timely to roll over or to receive distribution of his/her Account, the Plan Administrator or the Trustee, at the Plan Administrator's direction, may distribute to the Participant or may directly roll over the Participant's Account in accordance with the Plan's rollover notice

(D) Mandatory default rollover If (1) the Plan is a Governmental Eligible 457 Plan, (2) the Plan makes a mandatory distribution after the 401(a)(31)(B) Effective Date, greater than $1,000, and (3) the participant does not elect to have such distribution paid directly to an eligible retirement plan specified by the participant in a direct rollover or to receive the distribution directly, then the plan administrator will pay the distribution in a direct rollover to an individual retirement plan designated by the plan administrator

(E) Definitions. The following definitions apply to this Section

(1) **Eligible rollover distribution.** An eligible rollover distribution is any distribution of all or any portion of a Participant's Account, except an eligible rollover distribution does not include (a) any distribution which is one of a series of substantially equal periodic payments (not less frequently than annually) made for the life (or life expectancy) of the Participant or the joint lives (or joint life expectancies) of the Participant and the Participant's designated Beneficiary, or for a specified period of ten years or more, (b) any Code §401(a)(9) required minimum distribution, (c) any unforeseeable emergency distribution, and (d) any distribution which otherwise would be an eligible rollover distribution, but where the total distributions to the Participant during that calendar year are reasonably expected to be less than $200

(2) **Eligible retirement plan.** An eligible retirement plan is an individual retirement account described in Code §408(a), an individual retirement annuity described in Code §408(b), an annuity plan described in Code §403(a), a qualified plan described in Code §401(a), an annuity contract (or custodial agreement) described in Code §403(b), or an eligible deferred compensation plan described in Code §457(b) and maintained by an Employer described in Code §457(e)(1)(A), which accepts the Participant's, the Participant's spouse or alternate payee's eligible rollover distribution

(3) **Direct rollover.** A direct rollover is a payment by the Plan to the eligible retirement plan specified by the distributee

(4) **Mandatory distribution.** A mandatory distribution is an eligible rollover distribution without the Participant's consent before the Participant attains the later of age 62 or Normal Retirement Age (see paragraph 3 05 (B)) A distribution to a beneficiary is not a mandatory distribution

(5) **401(a)(31)(B) Effective Date.** The 401(a)(31)(B) Effective Date is the date of the close of the first regular legislative session of the legislative body with the authority to amend the Plan that begins on or after January 1, 2006

ARTICLE V
PLAN ADMINISTRATOR - DUTIES WITH RESPECT TO PARTICIPANTS' ACCOUNTS

5 01 TERM / VACANCY The Plan Administrator will serve until his/her successor is appointed In case of a vacancy in the position of the Plan Administrator, the Employer will exercise any and all of the powers, authority, duties and discretion conferred upon the Plan Administrator pending the filling of the vacancy

5 02 POWERS AND DUTIES The Plan Administrator will have the following powers and duties

(a) To select a Committee to assist the Plan Administrator,

(b) To select a Secretary for the Committee, who need not be a member of the Committee,

(c) To determine the rights of eligibility of an Employee to participate in the Plan and the value of a Participant's Account,

(d) To adopt rules and procedures and to create administrative forms necessary for the proper and efficient administration of the Plan provided the rules, procedures and forms are not inconsistent with the terms of the Plan,

(e) To construe and enforce the terms of the Plan and the rules and regulations the Plan Administrator adopts, including interpretation of the Plan documents and documents related to the Plan's operation,

(f) To direct the distribution of a Participant's Account,

(g) To review and render decisions respecting a claim for (or denial of a claim for) a benefit under the Plan,

(h) To furnish the Employer with information which the Employer may require for tax or other purposes,

(i) To establish a policy in making distributions for unforeseeable emergencies,

(j) To establish under a Governmental Eligible 457 Plan, policies regarding the receipt of Rollover Contributions and default rollover distributions,

(k) To establish a policy regarding the making and the receipt of Transfers,

(l) To establish a policy regarding Participant or Beneficiary direction of investment,

(m) To engage the services of any person to invest any Account under this Plan and to direct such person to make payment to a Participant of his/her Vested Account,

(n) To comply with the reporting and disclosure rules of ERISA if applicable to the Plan,

(o) To establish under a Governmental Eligible 457 Plan, a policy (see Section 5 02(A)) which the Trustee must observe in making loans, if any, to Participants and Beneficiaries,

(p) To undertake correction of any Plan failures as necessary to preserve Eligible Plan status, and

(q) To undertake any other action the Plan Administrator deems reasonable or necessary to administer the Plan

The Plan Administrator shall have total and complete discretion to interpret and construe the Plan and to determine all questions arising in the administration, interpretation and application of the Plan Any determination the Plan Administrator makes under the Plan is final and binding upon any affected person

(A) Loan Policy. In a Governmental Eligible 457 Plan, the Plan Administrator, in its sole discretion, may establish, amend or terminate from time to time, a nondiscriminatory policy which the Trustee must observe in making Plan loans, if any, to Participants and to Beneficiaries If the Plan Administrator adopts a loan policy, the loan policy must be a written document and must include (1) the identity of the person or positions authorized to administer the participant loan program, (2) the procedure for applying for a loan, (3) the criteria for approving or denying a loan, (4) the limitations, if any, on the types and amounts of loans available, (5) the procedure for determining a reasonable rate of interest, (6) the types of collateral which may secure the loan, and (7) the events constituting default and the steps the Plan will take to preserve Plan assets in

© Copyright 2005 SunGard

the event of default A loan policy the Plan Administrator adopts under this Section 5 02(A) is part of the Plan, except that the Plan Administrator may amend or terminate the policy without regard to Section 9 01

(B) QDRO Policy. If the QDRO provisions of Section 4 06 apply, the Plan Administrator will establish QDRO procedures

5 03 COMPENSATION The Plan Administrator and the members of the Committee will serve without compensation for services, but the Employer will pay all expenses of the Plan Administrator and Committee

5 04 AUTHORIZED REPRESENTATIVE The Plan Administrator may authorize any one of the members of the Committee, if any, or the Committee's Secretary, to sign on the Plan Administrator's behalf any Plan notices, directions, applications, certificates, consents, approvals, waivers, letters or other documents

5 05 INDIVIDUAL ACCOUNTS / RECORDS The Plan Administrator will maintain a separate Account in the name of each Participant to reflect the value of the Participant's Deferred Compensation under the Plan The Plan Administrator will maintain records of its activities

5 06 VALUE OF PARTICIPANT'S ACCOUNT The value of each Participant's Account consists of his/her accumulated Deferred Compensation, as of the most recent Accounting Date or any later date as the Plan Administrator may determine

5 07 ALLOCATION OF NET INCOME, GAIN OR LOSS As of each Accounting Date (and each other valuation date determined under Section 5 06), the Plan Administrator will adjust Accounts to reflect net income, gain or loss, if any, since the last Accounting Date or Account valuation The Employer in the Adoption Agreement will elect whether the adjustment for net income gain or loss reflects actual Account earnings or an interest credit The Plan Administrator will continue to allocate net income, gain and loss to a Participant's Account subject to an installment distribution, until the Account is fully distributed

5 08 ACCOUNT CHARGED The Plan Administrator will charge all distributions made to a Participant or to his/her Beneficiary, or transferred under Section 9 03 from his/her Account, against the Account of the Participant when made

5 09 OWNERSHIP OF FUND/TAX-EXEMPT ORGANIZATION If the Employer is a Tax-Exempt Organization, the Plan is an unfunded plan and all Deferred Compensation, property and rights to property purchased by Deferred Compensation and all income attributable thereto remain, until paid or made available under the Plan, the sole property and rights of the Employer, subject only to the claims of the Employer's general creditors No Participant or Beneficiary will have any vested interest or secured or preferred position with respect to an Account or have any claim against the Employer except as a general creditor No Participant or Beneficiary shall have any right to sell, assign, transfer or otherwise convey his or her Account or any interest in his or her Deferred Compensation The Employer or the Plan Administrator, acting as the Employer's agent, may enter into a trust agreement solely for the purpose of investing all or part of the Accounts, which will be subject to the claims of the Employer's general creditors, and in which the Participants or Beneficiaries will not have a vested interest nor a secured or preferred position or have any claim except as the Employer's general creditor The Employer may not purchase life insurance contracts under this Plan unless the Employer retains all incidents of ownership in such contracts, the Employer is the sole beneficiary of such contracts and the Employer is not under any obligation to transfer the contracts or pass through the proceeds to any Participant or to his/her Beneficiary The Employer may adopt and attach to the Plan as "Appendix A," the Internal Revenue Service Model Rabbi Trust under Rev Proc 92-64 (as amended) to hold the assets of a Tax-Exempt Organization Eligible 457 Plan If the Employer adopts the Model Rabbi Trust, the Plan incorporates by reference the provisions of the Model Rabbi Trust as if fully set forth herein

5 10 PARTICIPANT DIRECTION OF INVESTMENT Subject to the terms of the Plan Administrator's adopted policy, if any, and also to written consent of the Trustee, if the Plan has a Trust, a Participant will have the right to direct the investment or re-investment of the assets comprising the Participant's Account The Plan Administrator will account separately for the Participant-directed Accounts The Participant's right to direct investment does not give the Participant any vested interest or secured or preferred position with respect to assets over which he/she has investment responsibility

5 11 VESTING / SUBSTANTIAL RISK OF FORFEITURE The Employer in the Adoption Agreement may elect to apply a vesting schedule or to specify any other Substantial Risk of Forfeiture applicable to any or all Deferral Contributions

(A) Forfeiture Allocation The Employer in its Adoption Agreement must elect the method the Plan Administrator will use to allocate any Participant forfeitures, including those related to lost Participants under Section 5 14 The Plan Administrator will allocate a forfeiture in the Plan Year in which the forfeiture occurs or in the next following Plan Year

5 12 PRESERVATION OF ELIGIBLE PLAN STATUS The Plan Administrator may elect to sever from this Plan and to treat as a separate 457 plan, the Accounts of any Participants who have Excess Deferrals that the Plan Administrator has not corrected in accordance with Section 3 10 or in the case of any other Code §457(b) failure that the Employer may not otherwise correct, and which failure would result in the Plan ceasing to be an Eligible 457 Plan In such event, the Plan Administrator will take any necessary or appropriate action consistent with the Employer's maintenance of separate 457 plans and with preservation of Eligible 457 Plan status of this Plan

5 13 LIMITED LIABILITY The Employer will not be liable to pay plan benefits to a Participant in excess of the value of the Participant's Account as the Plan Administrator determines in accordance with the Plan terms Neither the Employer nor the Plan Administrator will be liable for losses arising from depreciation or shrinkage in the value of any investments acquired under this Plan

5 14 LOST PARTICIPANTS If the Plan Administrator is unable to locate any Participant or Beneficiary whose Account becomes distributable (a "lost Participant"), the Plan Administrator will apply the provisions of this Section 5 14

(A) Attempt to Locate. The Plan Administrator will attempt to locate a lost Participant and may use one or more of the following methods (1) provide a distribution notice to the lost Participant at his/her last known address by certified or registered mail, (2) use the IRS letter forwarding program under Rev Proc 94-22, (3) use a commercial locator service, the internet or other general search method, (4) use the Social Security Administration or PBGC search program, or (5) use such other methods as the Plan Administrator believes prudent

(B) Failure to Locate. If a lost Participant remains unlocated for 6 months following the date the Plan Administrator first attempts to locate the lost Participant using one or more of the methods described in Section 5 14(A), the Plan Administrator may forfeit the lost Participant's Account If the Plan Administrator forfeits the lost Participant's Account, the forfeiture occurs at the end of the above-described 6-month period and the Plan Administrator will allocate the forfeiture in accordance with Section 5 11 The Plan Administrator under this Section 5 14(B) will forfeit the entire Account of the lost Participant, including Salary Reduction Contributions

If a lost Participant whose Account was forfeited thereafter at any time but before the Plan has been terminated makes a claim for his/her forfeited Account, the Plan Administrator will restore the forfeited Account to the same dollar amount as the amount forfeited, unadjusted for net income, gains or losses occurring subsequent to the forfeiture The Plan Administrator will make the restoration in the Plan Year in which the lost Participant makes the claim, first from the amount, if any, of Participant forfeitures the Plan Administrator otherwise would allocate for the Plan Year, then from the amount, if any, of Trust net income or gain for the Plan Year and last from the amount or additional amount the Employer contributes to the Plan for the Plan Year The Plan Administrator will distribute the restored Account to the lost Participant not later than 60 days after the close of the Plan Year in which the Plan Administrator restores the forfeited Account

(C) Nonexclusivity and Uniformity. The provisions of this Section 5 14 are intended to provide permissible but not exclusive means for the Plan Administrator to administer the Accounts of lost Participants The Plan Administrator may utilize any other reasonable method to locate lost Participants and to administer the Accounts of lost Participants, including the default rollover under Section 4 07(C) and such other methods as the Revenue Service or the U S Department of Labor ("DOL") may in the future specify The Plan Administrator will apply Section 5 14 in a reasonable manner, but may in determining a specific course of action as to a particular Account, reasonably take into account differing circumstances such as the amount of a lost Participant's Account, the expense in attempting to locate a lost Participant, the Plan Administrator's ability to establish and the expense of establishing a rollover IRA, and other factors The Plan Administrator may charge to the Account of a lost Participant the reasonable expenses incurred under this Section 5 14 and which are associated with the lost Participant's Account

5 15 PLAN CORRECTION The Plan Administrator, in conjunction with the Employer and Trustee as appropriate, may undertake such correction of Plan errors as the Plan Administrator deems necessary, including but not limited to correction to maintain the Plan's status as an Eligible 457 Plan The Plan Administrator under this Section 5 15 also may undertake Plan correction in accordance with any correction program that the Internal Revenue Service makes applicable to 457 plans

ARTICLE VI
PARTICIPANT ADMINISTRATIVE PROVISIONS

6 01 BENEFICIARY DESIGNATION A Participant from time to time may designate, in writing, any person(s) (including a trust or other entity), contingently or successively, to whom the Plan Administrator or Trustee will pay the Participant's Account (including any life insurance proceeds payable to the Participant's Account) in the

© Copyright 2005 SunGard

event of death A Participant also may designate the method of payment of his/her Account The Plan Administrator will prescribe the form for the Participant s written designation of Beneficiary and, upon the Participant's filing the form with the Plan Administrator, the form revokes all designations filed prior to that date by the same Participant A divorce decree, or a decree of legal separation, revokes the Participant's designation, if any, of his/her spouse as his/her Beneficiary under the Plan unless (a) the decree or a QDRO provides otherwise, or (b) the Employer provides otherwise in an Addendum to its Adoption Agreement The foregoing revocation provision (if applicable) applies only with respect to a Participant whose divorce or legal separation becomes effective on or following the date the Employer executes the Adoption Agreement, unless the Employer in its Adoption Agreement specifies a different effective date

6 02 NO BENEFICIARY DESIGNATION If a Participant fails to name a Beneficiary in accordance with Section 6 01, or if the Beneficiary named by a Participant predeceases the Participant, then the Plan Administrator will pay the Participant's remaining Account in accordance with Article IV in the following order of priority, to

(a) The Participant's surviving spouse, or

(b) The Participant's children (including adopted children), in equal shares by right of representation (one share for each surviving child and one share for each child who predeceases the Participant with living descendents), and if none to

(c) The Participant's estate

If the Beneficiary survives the Participant, but dies prior to distribution of the Participant's entire Account, the Trustee will pay the remaining Account to the Beneficiary's estate unless (1) the Participant's Beneficiary designation provides otherwise, or (2) the Beneficiary has properly designated a beneficiary A Beneficiary only may designate a beneficiary for the Participant's Account Balance remaining at the Beneficiary's death, if the Participant has not previously designated a successive contingent beneficiary and the Beneficiary's designation otherwise complies with the Plan terms The Plan Administrator will direct a Trustee if applicable as to the method and to whom the Trustee will make payment under this Section 6 02

6 03 SALARY REDUCTION AGREEMENT

(A) General. A Participant must elect to make Salary Reduction Contributions on a Salary Reduction Agreement form the Plan Administrator provides for this purpose The Salary Reduction Agreement must be consistent with the Employer's Adoption Agreement elections and the Plan Administrator in a Salary Reduction Agreement may impose such other terms and limitations as the Plan Administrator may determine

(B) Election Timing. A Participant's Salary Reduction Agreement may not take effect earlier than the first day of the calendar month following the date the Participant executes the Salary Reduction Agreement and as to Compensation paid or made available in such calendar month However, if an Employee is eligible to become a Participant during the Employee's calendar month of hire, the Employee may execute a Salary Reduction Agreement on or before the date he/she becomes an Employee, effective for the month in which he/she becomes an Employee

(C) Sick, Vacation and Back Pay. If the Employer under Adoption Agreement Section 3 02 permits Participants to make Salary Reduction Contributions from accumulated sick pay, from accumulated vacation pay or from back pay, a Participant who will incur a Severance from Employment may execute a Salary Reduction Agreement before such amounts are paid or made available provided (i) such amounts are paid or made available before the Participant incurs the Severance, and (ii) the Participant is an Employee in that month

(D) Modification of Salary Reduction Agreement A Participant's Salary Reduction Agreement remains in effect until a Participant modifies it or ceases to be eligible to participate in the Plan A Participant may modify his/her Salary Reduction Agreement by executing a new Salary Reduction Agreement Any modification will become effective no earlier than the beginning of the calendar month commencing after the date the Participant executes the new Salary Reduction Agreement Filing a new Salary Reduction Agreement will revoke all Salary Reduction Agreements filed prior to that date The Employer or Plan Administrator may restrict the Participant's right to modify his/her Salary Reduction Agreement in any Taxable Year

6 04 PERSONAL DATA TO PLAN ADMINISTRATOR Each Participant and each Beneficiary of a deceased Participant must furnish to the Plan Administrator such evidence, data or information as the Plan Administrator considers necessary or desirable for the purpose of administering the Plan The provisions of this Plan are effective for the benefit of each Participant upon the condition precedent that each Participant will furnish promptly full, true and complete evidence, data and information when requested by the Plan Administrator, provided the Plan Administrator advises each Participant of the effect of his failure to comply with its request

6 05 ADDRESS FOR NOTIFICATION Each Participant and each Beneficiary of a deceased Participant must file with the Plan Administrator from time to time, in writing, his/her address and any change of address Any communication, statement or notice addressed to a Participant, or Beneficiary, at his/her last address filed with the Plan Administrator, or as shown on the records of the Employer, binds the Participant, or Beneficiary, for all purposes of this Plan

6 06 PARTICIPANT OR BENEFICIARY INCAPACITATED If, in the opinion of the Plan Administrator or of the Trustee, a Participant or Beneficiary entitled to a Plan distribution is not able to care for his/her affairs because of a mental condition, a physical condition, or by reason of age, the Plan Administrator or at the direction of the Plan Administrator, the Trustee, may make the distribution to the Participant's or Beneficiary's guardian, conservator, trustee, custodian (including under a Uniform Transfers or Gifts to Minors Act) or to his/her attorney-in-fact or to other legal representative upon furnishing evidence of such status satisfactory to the Plan Administrator and to the Trustee The Plan Administrator and the Trustee do not have any liability with respect to payments so made and neither the Plan Administrator nor the Trustee has any duty to make inquiry as to the competence of any person entitled to receive payments under the Plan

ARTICLE VII
MISCELLANEOUS

7 01 NO ASSIGNMENT OR ALIENATION A Participant or Beneficiary does not have the right to commute, sell, assign, pledge, transfer or otherwise convey or encumber the right to receive any payments under the Plan or Trust and the Plan Administrator and the Trustee will not recognize any such anticipation, assignment, or alienation The payments and the rights under this Plan are nonassignable and nontransferable Furthermore, a Participant's or Beneficiary's interest in the Trust is not subject to attachment, garnishment, levy, execution or other legal or equitable process

7 02 EFFECT ON OTHER PLANS This Plan does not affect benefits under any other retirement, pension, or benefit plan or system established for the benefit of the Employer's Employees, and participation under this Plan does not affect benefits receivable under any such plan or system, except to the extent provided in such plan or system

7 03 WORD USAGE Words used in the masculine will apply to the feminine where applicable, and wherever the context of the Plan dictates, the plural will be read as the singular and the singular as the plural

7 04 STATE LAW The laws of the state of the Employer's principal place of business will determine all questions arising with respect to the provisions of this Prototype Plan except to the extent Federal law supersedes State law

7 05 EMPLOYMENT NOT GUARANTEED Nothing contained in this Plan, or any modification or amendment to the Plan, or in the creation of any Account, or the payment of any benefit, gives any Employee, Participant or Beneficiary any right to continue employment, any legal or equitable right against the Employer, the Plan Administrator, the Trustee, any other Employee of the Employer, or any agents thereof except as expressly provided by the Plan

7 06 NOTICE, DESIGNATION, ELECTION, CONSENT AND WAIVER All notices under the Plan and all Participant or Beneficiary designations, elections, consents or waivers must be in writing and made in a form the Plan Administrator specifies or otherwise approves To the extent permitted by Treasury regulations or other applicable guidance, any Plan notice, election, consent or waiver may be transmitted electronically Any person entitled to notice under the Plan may waive the notice or shorten the notice period except as otherwise required by the Code or ERISA

ARTICLE VIII
TRUST PROVISIONS—GOVERNMENTAL ELIGIBLE 457 PLAN

8 01 GOVERNMENTAL ELIGIBLE 457 PLAN The provisions of this Article VIII apply to a Governmental Eligible 457 Plan and do not apply to a Tax-Exempt Organization Eligible 457 Plan The Employer in the Adoption Agreement may elect to substitute another trust (attached to this Plan as "Appendix A") or to modify any provision of Article VIII, consistent with Code §457(g) and applicable Treasury regulations

8 02 ACCEPTANCE / HOLDING The Trustee accepts the Trust created under the Plan and agrees to perform the duties and obligations imposed The Trustee must hold in trust under this Article VIII, all Deferred Compensation until paid in accordance with the Plan terms

8 03 RECEIPT OF CONTRIBUTIONS The Trustee is accountable to the Employer for the funds contributed to it by the Employer or the Plan Administrator, but the Trustee does not have any duty to see that the contributions received comply with the provisions of the Plan

8 04 FULL INVESTMENT POWERS The Trustee has full discretion and authority with regard to the investment of the Trust, except with respect to a Trust asset under Participant direction of

© Copyright 2005 SunGard

investment, in accordance with Section 8 12 The Trustee is authorized and empowered, but not by way of limitation, to exercise and perform the following powers, rights and duties

(a) To invest any part or all of the Trust in any common or preferred stocks, open-end or closed-end mutual funds, put and call options traded on a national exchange, United States retirement plan bonds, corporate bonds, debentures, convertible debentures, commercial paper, U S Treasury bills, U S Treasury notes and other direct or indirect obligations of the United States Government or its agencies, improved or unimproved real estate situated in the United States, limited partnerships, insurance contracts of any type, mortgages, notes or other property of any kind, real or personal, and to buy or sell options on common stock on a nationally recognized options exchange with or without holding the underlying common stock, as a prudent person would do under like circumstances Any investment made or retained by the Trustee in good faith will be proper but must be of a kind constituting a diversification considered by law suitable for trust investments,

(b) To retain in cash so much of the Trust as it may deem advisable to satisfy liquidity needs of the Plan and to deposit any cash held in the Trust in a bank account at reasonable interest,

(c) To invest, if the Trustee is a bank or similar financial institution supervised by the United States or by a State, in any type of deposit of the Trustee (or a bank related to the Trustee within the meaning of Code §414(b)) at a reasonable rate of interest or in a common trust fund as described in Code §584, or in a collective investment fund, the provisions of which the Trust incorporates by this reference, which the Trustee (or its affiliate, as defined in Code §1504) maintains exclusively for the collective investment of money contributed by the bank (or its affiliate) in its capacity as Trustee and which conforms to the rules of the Comptroller of the Currency,

(d) To manage, sell, contract to sell, grant options to purchase, convey, exchange, transfer, abandon, improve, repair, insure, lease for any term even though commencing in the future or extending beyond the term of the Trust, and otherwise deal with all property, real or personal, in such manner, for such considerations and on such terms and conditions as the Trustee decides,

(e) To credit and distribute the Trust as directed by the Plan Administrator of the Plan The Trustee will not be obliged to inquire as to whether any payee or distributee is entitled to any payment or whether the distribution is proper or within the terms of the Plan, or as to the manner of making any payment or distribution The Trustee will be accountable only to the Plan Administrator for any payment or distribution made by it in good faith on the order or direction of the Plan Administrator,

(f) To borrow money, to assume indebtedness, extend mortgages and encumber by mortgage or pledge,

(g) To compromise, contest, arbitrate or abandon claims and demands, in the Trustee's discretion,

(h) To have with respect to the Trust all of the rights of an individual owner, including the power to exercise any and all voting rights associated with Trust assets, to give proxies, to participate in any voting trusts, mergers, consolidations or liquidations, to tender shares and to exercise or sell stock subscriptions or conversion rights,

(i) To lease for oil, gas and other mineral purposes and to create mineral severances by grant or reservation, to pool or unitize interest in oil, gas and other minerals, and to enter into operating agreements and to execute division and transfer orders,

(j) To hold any securities or other property in the name of the Trustee or its nominee, with depositories or agent depositories or in another form as it may deem best, with or without disclosing the trust relationship,

(k) To perform any and all other acts in its judgment necessary or appropriate for the proper and advantageous management, investment and distribution of the Trust,

(l) To retain any funds or property subject to any dispute without liability for the payment of interest, and to decline to make payment or delivery of the funds or property until a court of competent jurisdiction makes a final adjudication,

(m) To file all tax returns required of the Trustee,

(n) To furnish to the Employer and the Plan Administrator an annual statement of account showing the condition of the Trust and all investments, receipts, disbursements and other transactions effected by the Trustee during the Plan Year covered by the statement and also stating the assets of the Trust held at the end of the Plan Year, which accounts will be conclusive on all persons, including the Employer and the Plan Administrator, except as to any act or transaction concerning which the Employer or the Plan Administrator files with the Trustee written exceptions or objections within 90 days after the receipt of the accounts, and

(o) To begin, maintain or defend any litigation necessary in connection with the administration of the Trust, except that the Trustee will not be obliged or required to do so unless indemnified to its satisfaction

(A) Nondiscretionary Trustee The Employer in the Adoption Agreement may elect to appoint a Nondiscretionary Trustee, subject to this Section 8 04(A) The Nondiscretionary Trustee does not have any discretion or authority with regard to the investment of the Trust, but must act solely as a directed Trustee hereunder The Nondiscretionary Trustee is authorized and empowered to exercise and perform the above Section 8 04 powers, rights and duties provided that the Trustee shall act solely as a directed Trustee and only in accordance with the written direction of the Employer, the Plan Administrator or of a Participant as applicable The Nondiscretionary Trustee is not liable for making, retaining or disposing of any investment or for taking or failing to take any other action, in accordance with proper Employer, Plan Administrator or Participant direction

8 05 RECORDS AND STATEMENTS The records of the Trustee pertaining to the Trust will be open to the inspection of the Plan Administrator and the Employer at all reasonable times and may be audited from time to time by any person or persons as the Employer or Plan Administrator may specify in writing The Trustee will furnish the Plan Administrator whatever information relating to the Trust the Plan Administrator considers necessary

8 06 FEES AND EXPENSES FROM FUND The Trustee will receive reasonable annual compensation in accordance with its fee schedule as published from time to time The Trustee will pay from the Trust all fees and expenses the Trustee reasonably incurs in its administration of the Trust, unless the Employer pays the fees and expenses

8 07 PROFESSIONAL AGENTS The Trustee may employ and pay from the Trust reasonable compensation to agents, attorneys, accountants and other persons to advise the Trustee as in its opinion may be necessary The Trustee may delegate to any agent, attorney, accountant or other person selected by it any non-Trustee power or duty vested in it by the Trust, and the Trustee may act or refrain from acting on the advice or opinion of any agent, attorney, accountant or other person so selected

8 08 DISTRIBUTION OF CASH OR PROPERTY The Trustee may make distribution under the Plan in cash or property, or partly in each, at its fair market value as determined by the Trustee

8 09 RESIGNATION AND REMOVAL The Trustee or the Custodian may resign its position by giving written notice to the Employer and to the Plan Administrator The Trustee's notice must specify the effective date of the Trustee's resignation, which date must be at least 30 days following the date of the Trustee's notice, unless the Employer consents in writing to shorter notice

The Employer may remove a Trustee or a Custodian by giving written notice to the affected party The Employer's notice must specify the effective date of removal which date must be at least 30 days following the date of the Employer's notice, except where the Employer reasonably determines a shorter notice period or immediate removal is necessary to protect Plan assets

8 10 SUCCESSOR TRUSTEE

(A) Appointment. In the event of the resignation or the removal of a Trustee, where no other Trustee continues to service, the Employer must appoint a successor Trustee if it intends to continue the Plan If two or more persons hold the position of Trustee, in the event of the removal of one such person, during any period the selection of a replacement is pending, or during any period such person is unable to serve for any reason, the remaining person or persons will act as the Trustee If the Employer fails to appoint a successor Trustee as of the effective date of the Trustee resignation or removal and no other Trustee remains, the Trustee will treat the Employer as having appointed itself as Trustee and as having filed the Employer's acceptance of appointment as successor Trustee with the former Trustee

(B) Automatic Successor. Any corporation which succeeds to the trust business of the Trustee, or results from any merger or consolidation to which the Trustee is a party, or is the transferee of substantially all the Trustee's assets, will be the successor to the Trustee under this Trust The successor Trustee will possess all rights, duties and powers under this Trust as if the successor Trustee were the original Trustee Neither the Trustee nor the successor Trustee need provide notice to any interested person of any transaction resulting in a successor Trustee The successor Trustee need not file or execute any additional instrument or perform any additional act to become successor Trustee

8 11 VALUATION OF TRUST The Trustee will value the Trust as of each Accounting Date to determine the fair market value of the Trust assets The Trustee will value the Trust on such other date(s) the Plan Administrator may direct

8 12 PARTICIPANT DIRECTION OF INVESTMENT Consistent with the Plan Administrator's policy adopted under Section 5 02(l), the Trustee may consent in writing to permit Participants in the Plan to direct the investment to the Trust assets The Plan Administrator will advise the Trustee of the portion of the Trust credited to each

© Copyright 2005 SunGard

Participant's Account under the Plan, and subject to such Participant direction As a condition of Participant direction, the Trustee may impose such conditions, limitations and other provisions as the Trustee may deem appropriate and as are consistent with the Plan Administrator's policy The Trustee will report to the Plan Administrator the net income, gain or losses incurred by each Participant directed Account separately from the net income, gain or losses incurred by the general Trust during the Trust Year

8 13 THIRD PARTY RELIANCE No person dealing with the Trustee will be obliged to see to the proper application of any money paid or property delivered to the Trustee, or to inquire whether the Trustee has acted pursuant to any of the terms of the Trust Each person dealing with the Trustee may act upon any notice, request or representation in writing by the Trustee, or by the Trustee's duly authorized agent, and will not be liable to any person whomsoever in so doing The certificate of the Trustee that it is acting in accordance with the Trust will be conclusive in favor of any person relying on the certificate

8 14 INVALIDITY OF ANY TRUST PROVISION If any clause or provision of this Article VIII proves to be or is adjudged to be invalid or void for any reason, such void or invalid clause or provision will not affect any of the other provisions of this Article VIII and the balance of the Trust provisions will remain operative

8 15 EXCLUSIVE BENEFIT The Trustee will hold all the assets of the Trust for the exclusive benefit of the Participants and their Beneficiaries and neither the Employer nor the Trustee will use or divert any part of the corpus or income of the Trust for purposes other than the exclusive benefit of the Participants and Beneficiaries of the Plan The Employer will not have any right to the assets held by the Trustee and the Trust assets will not be subject to the claims of the Employer's creditors or, except as provided in Section 4 06, of the creditors of any Participant or Beneficiary No Participant or Beneficiary shall have any right to sell, assign, transfer or otherwise convey his or her Account or any interest in his or her Deferred Compensation Notwithstanding the foregoing, the Plan Administrator may pay from a Participant's or Beneficiary's Account the amount the Plan Administrator finds is lawfully demanded under a levy issued by the Internal Revenue Service with respect to that Participant or Beneficiary or is sought to be collected by the United States Government under a judgment resulting from an unpaid tax assessment against the Participant or Beneficiary The Trust created under the Employer's Plan is irrevocable and its assets will not inure to the benefit of the Employer

8 16 SUBSTITUTION OF CUSTODIAL ACCOUNT OR ANNUITY CONTRACT The Employer in the Adoption Agreement may elect to use one or more custodial accounts or annuity contracts in lieu of or in addition to the Trust established in this Article VIII Any such custodial account or annuity contract must satisfy the requirements of Code §457(g)(3) and applicable Treasury regulations

8 17 GROUP TRUST AUTHORITY "Notwithstanding any contrary provision in this Plan, the Trustee may, unless restricted in writing by the Plan Administrator, transfer assets of the plan to a group trust that is operated or maintained exclusively for the commingling and collective investment of monies provided that the funds in the group trust consist exclusively of trust assets held under plans qualified under Code section 401(a), individual retirement accounts that are exempt under Code section 408(e), and eligible governmental plans that meets the requirements of Code section 457(b) For this purpose, a trust includes a custodial account that is treated as a trust under Code section 401(f) or under Code section 457(g)(3) For purposes of valuation, the value of the interest maintained by the Plan in such group trust shall be the fair market value of the portion of the group trust held for Plan, determined in accordance with generally recognized valuation procedures

ARTICLE IX
AMENDMENT, TERMINATION, TRANSFERS

9 01 AMENDMENT BY EMPLOYER / SPONSOR The Employer has the right at any time and from time to time

(a) To amend this Plan and Trust Agreement and its Adoption Agreement in any manner it deems necessary or advisable in order to continue the status of this Plan as an Eligible 457 Plan, and

(b) To amend this Plan and Trust Agreement and its Adoption Agreement in any other manner, including deletion, substitution or modification of any Plan , Trust or Adoption Agreement provision

The Employer must make all amendments in writing The Employer may amend the Plan by an Adoption Agreement election, by addenda, by separate amendment, or by restatement of the Adoption Agreement or Plan Each amendment must state the date to which it is either retroactively or prospectively effective The Employer also may not make any amendment that affects the rights, duties or responsibilities of the Trustee or the Plan Administrator without the written consent of the affected Trustee or the Plan Administrator

The Prototype Plan Sponsor also may amend the Plan and Trust in writing (including adoption of a

substitute Plan and Trust) without any adopting Employer being required to re-execute its Adoption Agreement, provided that the Sponsor considers the amendment necessary or advisable to continue the Plan as an Eligible 457 Plan and the amendment does not modify or affect any Employer's Adoption Agreement elections

9 02 TERMINATION / FREEZING OF PLAN The Employer has the right, at any time, to terminate this Plan or to cease (freeze) further Deferral Contributions to the Plan Upon termination or freezing of the Plan, the provisions of the Plan (other than provisions permitting continued Deferral Contributions) remain operative until distribution of all Accounts Upon Plan termination, the Plan Administrator or Trustee shall distribute to Participants and Beneficiaries all Deferred Compensation as soon as is reasonably practicable following termination

9 03 TRANSFERS The Employer may enter into a Transfer agreement with another employer under which this Plan (a) may accept a Transfer of a Participant's Account in the other employer's Eligible 457 Plan, or (b) may Transfer a Participant's (or Beneficiary's) Account in this Plan to the other employer's Eligible 457 Plan The plan sponsors of the plans involved in the Transfer both must be States or both must be Tax-Exempt Organizations and the plans must provide for Transfers The Participant or Beneficiary, after the Transfer will have Deferred Compensation in the recipient plan at least equal to his or her Deferred Compensation in the transferring plan immediately before the Transfer Any Transfer also must comply with applicable Treasury regulations, and in particular Treas Reg §§1 457-10(b)(2) as to post-severance transfers between Governmental Eligible 457 Plans, 1 457-10(b)(3) as to transfers of all assets between Governmental Eligible 457 Plans, 1 457-10(b)(4) as to transfers between Governmental Eligible 457 Plans of the same Employer, and 1 457-10(b)(5) as to post-severance transfers between Tax-Exempt Organization Eligible 457 Plans The Plan Administrator will credit any Transfer accepted under this Section 9 03 to the Participant's Account and will treat the transferred amount as a Deferral Contribution for all purposes of this Plan except the Plan Administrator, will not treat such Transfer as a Deferral Contribution subject to the limitations of Article III In addition, in the case of a Transfer between Tax-Exempt Organization Eligible Plans, the recipient plans shall apply a Participant's distribution elections made under the transferor plan in accordance with Treas Reg §1 457-10(b)(6)(ii) The Plan's Transfer of any Participant's or Beneficiary's Account under this Section 9 03 completely discharges the Employer, the Plan Administrator, the Trustee and the Plan from any liability to the Participant or Beneficiary for any Plan benefits

9 04 PURCHASE OF PERMISSIVE SERVICE CREDIT A Participant in a Governmental Eligible 457 Plan, prior to otherwise incurring a distributable event under Article IV, may direct the Trustee to transfer (as of January 1, 2002, or later) all or a portion of his/her Account to a governmental defined benefit plan (under Code §414(d)) for (a) the purchase of permissive service credit (under Code §415(n)(3)(A)) under such plan, or (b) the repayment of contributions and earnings previously refunded with respect to a forfeiture of service credited under the plan (or under another governmental plan within the same State) to which Code §415 does not apply by reason of Code §415(k)(3)

* * * * * * * * * * * * * * * * *

© Copyright 2005 SunGard

GALVESTON COUNTY
ELIGIBLE 457 PROTOTYPE PLAN
SALARY REDUCTION CONTRIBUTIONS/EMPLOYER CONTRIBUTIONS

ADOPTION AGREEMENT

ELIGIBLE 457 PROTOTYPE PLAN

SALARY REDUCTION CONTRIBUTIONS/EMPLOYER CONTRIBUTIONS ADOPTION AGREEMENT

The undersigned, County of Galveston, Texas ("Employer"), by executing this Adoption Agreement, elects to become a participating Employer in the McAfee & Taft _____ *(Sponsor's Name)* Eligible 457 Prototype Plan ("Plan") which is a part of the Alternate Plan of Galveston County The Plan consists of this Adoption Agreement and the accompanying basic plan document The Employer makes the following elections granted under the provisions of the Plan

ARTICLE I
DEFINITIONS

PLAN **(1.21).** The name of the Plan as adopted by the Employer is Galveston County Deferred Compensation Plan _____

TYPE OF 457 PLAN **(1.36).** The Type of 457 Plan is a *(Choose one of (a) or (b))*

[X] (a) **Governmental Eligible 457 Plan.** [Plan Section 1 36(A)]

[ ] (b) **Tax-Exempt Organization Eligible 457 Plan.** [Plan Section 1 36(B)] *[Note A Tax-Exempt Organization must restrict participation in the Plan to a select group of management or highly compensated employees]*

EMPLOYEE **(1.09).** The following are Excluded Employees and are not eligible to participate in the Plan *(Choose (a) or choose one or more of (b) through (f) as applicable)*

[X] (a) **No exclusions.** All Employees are eligible to participate

[ ] (b) **Part-time Employees.** The Plan defines part-time Employees as Employees who normally work less than _____ hours per week.

[ ] (c) **Hourly-paid Employees.**

[ ] (d) **All Employees except top-hat group.** All Employees are Excluded Employees except those Employees who the Employer determines are in a select group of management or highly compensated employees as would constitute a "top-hat" group within the meaning of Title I of ERISA

[ ] (e) **Leased Employees.** The Plan excludes Leased Employees

[ ] (f) *(Specify)* _____

[Note. A Tax-Exempt Organization must elect (d) or in (f) must specify top-hat group Participants by name, title or otherwise]

INDEPENDENT CONTRACTOR **(1.15).** The Plan *(Choose one of (a), (b) or (c))*

[ ] (a) **Participate.** Permits Independent Contractors to participate in the Plan

[X] (b) **Not participate.** Does not permit Independent Contractors to participate in the Plan

[ ] (c) **Specified Independent Contractors.** Permits the following specified Independent Contractors to participate _____

_____

[Note· If the Employer elects to permit any or all Independent Contractors to participate in the Plan, the term Employee as used in the Plan includes such participating Independent Contractors.]

COMPENSATION **(1.05).** Subject to the following elections, Compensation for purposes of allocation of Deferral Contributions means W-2 wages (including Elective Contributions) Compensation for an Independent Contractor means the amounts the Employer pays to the Independent Contractor for services, except as the Employer otherwise specifies below

Modifications to Compensation definition. The Employer elects to modify the Compensation definition as follows *(Choose (a) or choose one or more of (b) through (f) as applicable)*

[ ] (a) **No modifications.** The Plan makes no modifications to the definition

[X] (b) **Fringe benefits.** The Plan excludes all reimbursements or other expense allowances, fringe benefits (cash and noncash), moving expenses, deferred compensation and welfare benefits

[ ] (c) **Elective Contributions.** [Plan Section 1 05(C)] The Plan excludes a Participant's Elective Contributions

[ ] (d) **Bonuses.** The Plan excludes bonuses

[ ] (e) **Overtime.** The Plan excludes overtime

[ ] (f) *(Specify)* _____

_____

_____

Compensation taken into account. For the Plan Year in which an Employee first becomes a Participant, the Plan Administrator, except as to Salary Reduction Contributions, will determine the allocation by taking into account *(Choose one of (g) or (h))*

[X] (g) **Plan Year.** The Employee's Compensation for the entire Plan Year

[ ] (h) **Compensation while a Participant.** The Employee's Compensation only for the portion of the Plan Year in which the Employee actually is a Participant

PLAN YEAR **(1.24).** Plan Year means the 12-consecutive month period (except for a short Plan Year) ending every *(Choose one of (a) or (b) Choose (c) as applicable)*

[X] (a) **December 31.**

[ ] (b) **Other:** _____

_____

[ ] (c) **Short Plan Year:** commencing on _____ and ending on _____

_____

EFFECTIVE DATE **(1.08).** *(Choose one of (a) or (b) Choose (c) as applicable)*

[ ] (a) **New Plan.** The Effective Date of the Plan is _____

_____

[X] (b) **Restated Plan.** The restated Effective Date is July 1, 2012 This Plan is a substitution and amendment of an existing 457 plan originally established effective as of January 1, 1981

[ ] (c) **Special Effective Dates.** The following special Effective Dates apply _____

_____

NORMAL RETIREMENT AGE **(1.19).** A Participant attains Normal Retirement Age under the Plan *(Choose one of (a) or (b) Choose (c) as applicable)*

[ ] (a) **Plan designation.** [Plan Section 3 05(B)] When the Participant attains age _____

[X] (b) **Participant designation.** [Plan Section 3 05(B)and (B)(1)] When the Participant attains the age the Participant designates, which may not be earlier than age at which the Participant has the right to retire under the Employer's basic retirement plan (TCDRS) without the Employer's consent and to receive immediate retirement benefits without actuarial or similar reduction because of early retirement _____

[ ] (c) **Police/firefighters.** [Plan Section 3 05(B)(3)] *(Choose one of (1) or (2))*

[ ] (1) **Plan designation.** When the Participant attains age ____

[ ] (2) **Participant designation.** When the Participant attains the age the Participant designates, which may not be earlier than age _____ and may not be later than age _____ (no later than 70½)

ARTICLE II
EMPLOYEE PARTICIPANTS

2.01 ELIGIBILITY

Eligibility Conditions. To become a Participant in the Plan, an Employee must satisfy the following eligibility condition(s) *(Choose (a) or choose one or more of (b) through (d) as applicable)*

[X] (a) **No eligibility conditions.** The Employee is eligible to participate in the Plan as of his/her first day of employment with the Employer

[ ] (b) **Age.** Attainment of age _____

[ ] (c) **Service.** Service requirement *(Choose one of (1) or (2))*

[ ] (1) **Year of Service.** One year of Continuous Service

[ ] (2) **Months(s) of Service.** _____ month(s) of Continuous Service

[ ] (d) *(Specify)* _____

_____

_____

Plan Entry Date. "Plan Entry Date" means the Effective Date and *(Choose one of (e) through (h))*

[ ] (e) **Monthly.** The first day of the month coinciding with or next following the Employee's satisfaction of the Plan's eligibility conditions

[ ] (f) **Annual.** The first day of the Plan Year coinciding with or next following the Employee's satisfaction of the Plan's eligibility conditions

[X] (g) **Date of hire.** The Employee's employment commencement date with the Employer

[ ] (h) *(Specify)* _____

ARTICLE III
SALARY REDUCTION CONTRIBUTIONS, MATCHING CONTRIBUTIONS AND NONELECTIVE CONTRIBUTIONS

3 01 TYPE AND AMOUNT The amount and type(s) of Deferral Contributions to the Plan for a Plan Year or other specified period will equal *(Choose one or more of (a) through (c) as applicable)*

[X] (a) **Salary Reduction Contributions.** The dollar or percentage amount by which each Participant has elected to reduce his/her Compensation, as provided in the Participant's Salary Reduction Agreement

[ ] (b) **Matching Contributions.** The Matching Contributions made in accordance with Section 3 03

[X] (c) **Nonelective Contributions.** The following Nonelective Contribution *(Choose one or more of (1), (2) or (3) as applicable)*

[X] (1) **Discretionary contribution.** A percentage, determined by the Employer in its sole discretion, of each Employee's Compensation, less the cost of such Employee's life and disability insurance premiums, will be allocated to the Employee's account as a fixed non-elective employer contribution each payroll period While the Employer may change the percentage to be allocated, this nonelection employer contribution is mandatory

[ ] (2) **Fixed contribution.** The following amount _____

[ ] (3) **Non-pro rata allocation.** The Plan Administrator will allocate the fixed or discretionary Nonelective Contributions as follows _____

3 02 SALARY REDUCTION CONTRIBUTIONS A Participant's Salary Reduction Contributions are subject to the following limitation(s) in addition to those imposed by the Code (Choose (a) or choose one or more of (b) through (d) as applicable)

[ ] (a) **No limitations**

[ ] (b) **Maximum deferral amount** _____

[X] (c) **Minimum deferral amount** Each Employee hired after January 1, 1987 is required as a condition of employment to defer 6 13% of Compensation These amounts are referred to herein as "Mandatory Salary Deferrals" Amounts deferred in excess of this percentage of Compensation are referred to as "Voluntary Salary Deferrals" herein Employees hired prior to January 1, 1987 are not required to make participate in the Plan, however, if such an Employee elects to participate in the Plan at any time, such Employee must remain a Participant in the Plan and make Mandatory Salary Deferrals until such time that they are no longer employed by the County of Galveston

[ ] (d) *(Specify)* _____

_____

[Note Any limitation the Employer elects in (b) through (d) will apply on a payroll basis unless the Employer otherwise specifies]

Age 50 Catch-up Contributions. [Plan Section 3 06] The Plan *(Choose one of (e) or (f))*

[X] (e) **Permits.** Permits Participants to make age 50 catch-up contributions

[ ] (f) **Does not permit.** Does not permit Participants to make age 50 catch-up contributions

[Note Only a Governmental Eligible 457 Plan may permit age 50 catch-up contributions]

Sick, Vacation and Back Pay. [Plan Section 3 02(A)] The Plan *(Choose one of (g) or (h))*

[X] (g) **Permits.** Permits Participants to make Salary Reduction Contributions from accumulated sick pay, from accumulated vacation pay or from back pay

[ ] (h) **Does not permit.** Does not permit Participants to make Salary Reduction Contributions from accumulated sick pay, from accumulated vacation pay or from back pay

Automatic Enrollment. [Plan Section 3 02(B)] The Plan *(Choose one of (i) or (j))*

[X] (i) **Does not apply.** Does not apply the Plan's automatic enrollment provisions

[ ] (j) **Applies.** Applies the Plan's automatic enrollment provisions The Employer as a Salary Reduction Contribution will withhold _____% from each Participant's Compensation unless the Participant elects a lesser percentage (including zero) under his/her Salary Reduction Agreement The automatic election will apply to *(Choose one of (1) or (2))*

[ ] (1) **All Participants.** All Participants who as of _____ are not making Salary Reduction Contributions at least equal to the automatic amount

[ ] (2) **New Participants.** Each Employee whose Plan Entry Date is on or following _____

3 03 MATCHING CONTRIBUTIONS The Employer's Matching Contribution is *(If the Employer elects Section 3 01(b), the Employer must elect one or more of (a), (b) or (c))*

[ ] (a) **Fixed formula.** An amount equal to _____% of each Participant's Salary Reduction Contributions

[ ] (b) **Discretionary formula.** An amount (or additional amount) equal to a matching percentage the Employer from time to time may deem advisable of each Participant's Salary Reduction Contributions

[ ] (c) *(Specify)* _____

_____

Time period for Matching Contributions. The Employer will determine its Matching Contribution based on Salary Reduction Contributions made during each *(Choose one of (d) through (g))*

[ ] (d) **Plan Year**

[ ] (e) **Plan Year quarter**

[ ] (f) **Payroll period**

[ ] (g) *(Specify)* _____

_____

Salary Reduction Contributions Taken into Account. In determining a Participant's Salary Reduction Contributions taken into account for the above-specified time period under the Matching Contribution formula, the following limitations apply *(Choose one of (h), (i), (j) or (k))*

[ ] (h) **All Salary Reduction Contributions.** The Plan Administrator will take into account all Salary Reduction Contributions

[ ] (i) **Specific limitation.** The Plan Administrator will disregard Salary Reduction Contributions exceeding _____% of the Participant's Compensation

[ ] (j) **Discretionary.** The Plan Administrator will take into account the Salary Reduction Contributions as a percentage of the Participant's Compensation as the Employer determines

[ ] (k) *(Specify)* _____

_____

_____

3 08 ALLOCATION CONDITIONS The Plan does not apply any allocation conditions to Salary Reduction Contributions To receive an allocation of a Matching Contribution or Nonelective Contribution, a Participant must satisfy the following condition(s) *(Choose (a) or choose one or more of (b) through (f))*

[X] (a) **No allocation conditions.**

[ ] (b) **Service condition.** The Participant must complete the following number of months of Continuous Service during the Plan Year _____

_____

[ ] (c) **Employment condition.** The Participant must be employed by the Employer on the last day of the Plan Year

[ ] (d) **Limited Severance Exception.** Any condition specified in (b) or (c) does not apply if the Participant incurs a Severance from Employment during the Plan Year on account of death, disability or attainment of Normal Retirement Age in the current Plan Year or in a prior Plan Year

[ ] (e) **Limited allocation conditions.** The Plan does not impose an allocation condition for the following types of contributions _____

[ ] (f) *(Specify)* _____

ARTICLE IV
TIME AND METHOD OF PAYMENT OF BENEFITS

4 02 TIME/METHOD OF PAYMENT OF ACCOUNT The Plan will distribute to a Participant who incurs a Severance from Employment his/her Vested Account as follows

Timing. The Plan, in the absence of a permissible Participant election to commence payment earlier, will pay the Participant's Account (*Choose one of (a) through (e)*)

[ ] (a) **Specified Date.** _____ days after the Participant's Severance from Employment *[Note· In a Tax-Exempt Organization 457 Plan, the Employer may wish to designate a specific payment date This date will be the date upon which a Participant's Deferred Compensation is "made available" and therefore becomes taxable to the Participant, absent a proper Participant election to defer payment]*

[ ] (b) **Immediate.** As soon as administratively practicable following the Participant's Severance from Employment

[ ] (c) **Designated Plan Year.** As soon as administratively practicable in the _____ Plan Year beginning after the Participant's Severance from Employment

[ ] (d) **Normal Retirement Age.** As soon as administratively practicable after the close of the Plan Year in which the Participant attains Normal Retirement Age

[X] (e) *(Specify)* ____ in accordance with the minimum distribution requirements of Section 401(a)(9) of the Code _____

Method. The Plan, in the absence of a permissible Participant election of an alternative method, will distribute the Participant's Account under one of the following method(s) of distribution *(Choose one or more of (f) through (j) as applicable)*

[ ] (f) **Lump sum.** A single payment

[ ] (g) **Installments** Multiple payments made as follows _____

[X] (h) **Installments for required minimum distributions only.** Annual payments, as necessary under Plan Section 4 03

[ ] (i) **Annuity distribution option(s):** _____

_____

[ ] (j) *(Specify)* _____

Participant Election. [Plan Sections 4 02(A) and (B)] The Plan *(Choose one of (k), (l) or (m))*

[X] (k) **Permits.** Permits a Participant, with Plan Administrator approval of the election, to elect to postpone or accelerate distribution upon the occurrence of an event described in Section 4 01 of the basic plan document and also to elect the method of distribution (including a method not described in (f) through (j) above)

[ ] (l) **Does not permit.** Does not permit a Participant to elect the timing and method of Account distribution

[ ] (m) *(Specify)* _____

_____

4 03 REQUIRED MINIMUM DISTRIBUTIONS The following elections apply to required minimum distributions under the Plan *(Choose one of (a) or (b) as applicable Choose (c) and (d) as applicable)*

[ ] (a) **Five-year rule.** If a Participant with a designated Beneficiary dies before the required beginning date, the Plan will distribute the Participant's Account by December 31 of the calendar year containing the fifth anniversary of the Participant's death

[X] (b) **Participant election.** A Participant or designated Beneficiary, on an individual basis in accordance with applicable Treasury regulations, may elect whether to apply the five-year rule or the life expectancy rule to the distribution of a deceased Participant's Account

[X] (c) **Effective date.** The required minimum distribution provisions of Section 4 03 apply commencing in 2003 ,or if later, on the Plan's Effective Date

[ ] (d) **Special designated Beneficiary election.** A designated Beneficiary who is receiving payments under the five-year rule on or before December 31, 2002, may elect the life expectancy rule, in accordance with applicable Treasury regulations

[Note. An Employer need not elect any of (a) through (d) above These elections override certain "default" Plan provisions.]

4 05 DISTRIBUTIONS PRIOR TO SEVERANCE FROM EMPLOYMENT A Participant prior to Severance from Employment may elect to receive a distribution of his/her Vested Account under the following distribution options *(Choose (a) or choose one or more of (b) through (e) as applicable)*

[ ] (a) **None.** A Participant may not receive a distribution prior to Severance from Employment

[X] (b) **Unforeseeable emergency** A Participant may elect a distribution from his/her Voluntary Salary Deferrals in his/her Account in accordance with Plan Section 4 05(A) A Participant may not elect a distribution upon an unforeseeable emergency from his/her Mandatory Salary Deferrals or Nonelective Contributions in his/her Account

[X] (c) **De minimis exception** [Plan Section 4.05(B)] If the Participant (i) has an Account that does not exceed $5,000, (ii) has not made or received an allocation of any Deferral Contributions under the Plan during the two-year period ending on the date of distribution, and (iii) has not received a prior Plan distribution under this de minimis exception, then *(Choose one of (1), (2) or (3))*

[X] (1) **Participant election.** The Participant may elect to receive all or any portion of his/her Account

[ ] (2) **Mandatory distribution.** The Plan Administrator will distribute the Participant's entire Account

[ ] (3) **Hybrid.** The Plan Administrator will distribute a Participant's Account that does not exceed $_____ and the Participant may elect to receive all or any portion of his/her Account that exceeds $_____but that does not exceed $5,000

[X] (d) **Age 70½.**

[X] (e) **Distribution of Rollover Contributions.** A Participant *(Choose one of (1) or (2))*

[X] (1) **Distribution without restrictions.** May elect distribution of his/her Rollover Contributions Account in accordance with Plan Section4 05(C) at any time

[ ] (2) **No distribution.** May not elect to receive distribution of his/her Rollover Contributions Account until the Plan has a distributable event under Plan Section 4 01

[ ] (3) *(Specify)* _____
_____

[ ] (f) *(Specify)* _____
_____
_____

[Note. An Employer in an Eligible 457 Plan need not permit any in-service distributions. In an Eligible 457 Plan, any election must comply with the distribution restrictions of Code §457(d).]

4.06 QDRO The QDRO provisions of Plan Section 4.06 *(Choose one of (a), (b) or (c))*

[X] (a) **Apply.**

[ ] (b) **Do not apply.**

[ ] (c) *(Specify)* _____
_____

ARTICLE V
PLAN ADMINISTRATOR - DUTIES WITH RESPECT TO PARTICIPANTS' ACCOUNTS

5.07 ALLOCATION OF NET INCOME, GAIN OR LOSS The Plan Administrator will allocate net income, gain or loss using the following method *(Choose one of (a), (b) or (c))*

[X] (a) **Account Earnings.** The Plan credits to each Account the Account's actual earnings, including Trust earnings if applicable

[ ] (b) **Interest.** The Plan credits to each Account interest at the rate of _____% per annum compounded _____

[ ] (c) *(Specify)* _____

5 11 VESTING/SUBSTANTIAL RISK OF FORFEITURE. A Participant's Deferral Contributions are [Note: If a Participant incurs a Severance from Employment before the specified events or conditions, the Plan will forfeit the Participant's Account.] (Choose one of (a), (b), (c) or (d) Choose (e) as applicable)

[X] (a) **100% Vested.** Immediately Vested without regard to additional Service

[ ] (b) **Forfeiture under Vesting Schedule.** Vested according to the following vesting schedule

Years of Service	Vested Percentage
_____	_____
_____	_____
_____	_____
_____	_____

For this purpose, a "Year of Service" means _____

[ ] (c) **Substantial Risk of Forfeiture.** Vested only when no longer subject to the following Substantial Risk of Forfeiture as follows *(Choose (1) or (2))*

[ ] (1) The Participant must remain employed by the Employer until _____, unless earlier Severance from Employment occurs on account of death or disability, as the Plan Administrator shall establish

[ ] (2) *(Specify)* _____

[ ] (d) *(Specify)* _____

[ ] (e) **Contributions affected.** The following contributions are subject to the vesting schedule under (b), Substantial Risk of Forfeiture under (c) or vesting as described in (d) (Choose one or more of (1), (2) or (3))

[ ] (1) **Salary Reduction Contributions.**

[ ] (2) **Nonelective Contributions.**

[ ] (3) **Matching Contributions.**

[ ] (4) (Specify) _____

_____

[Note. Any contribution type the Employer does not elect under (e) is immediately 100% Vested If the Employer elects (a), it need not elect (e) or one of (f) through (i) below]

Forfeiture Allocation. [Plan Sections 5 11(A) and 5 14] The Plan Administrator will allocate any Plan forfeitures *(Choose one of (f), (g), (h) or (i))*

[ ] (f) **Reversion.** As a reversion to the Employer *[Note Do not elect (f) in a Governmental Eligible 457 Plan]*

[ ] (g) **Additional Contributions.** As the following contribution type *(Choose one or (1) or (2))*:

[ ] (1) **Nonelective.** As an additional Nonelective Contribution

[ ] (2) **Matching.** As an additional Matching Contribution

[ ] (h) **Reduce Fixed Contributions.** To reduce the following fixed contribution *(Choose one of (1) or (2))*:

[ ] (1) **Nonelective.** The reduce the Employer's fixed Nonelective Contribution

[ ] (2) **Matching.** To reduce the Employer's fixed Matching Contribution

[ ] (i) *(Specify)* _____

_____

_____

ARTICLE VIII
TRUST PROVISIONS – GOVERNMENTAL ELIGIBLE 457 PLAN

8 01 MODIFICATION OR SUBSTITUTION OF TRUST The following provisions apply to Article VIII of the Plan *(Choose one of (a) or (b) as applicable)*:

[X] (a) **Modifications.** The Employer modifies the Article VIII Trust provisions as follows _____ _____ The remaining Article VIII provisions apply

[ ] (b) **Substitution.** The Employer replaces the Trust with the Trust Agreement attached to the Plan as "Appendix A "

8 04 DISCRETIONARY/NONDISCRETIONARY TRUSTEE. *(Choose one of (a) or (b))*:

[ ] (a) **Discretionary trustee.** [Plan Section 8 04] The Trustee is a discretionary Trustee

[X] (b) **Nondiscretionary trustee.** [Plan Section 8 04(A)] The Trustee is a nondiscretionary Trustee

8 16 CUSTODIAL ACCOUNT/ANNUITY CONTRACT The Employer will hold all or part of the Deferred Compensation in one or more custodial accounts or annuity contracts which satisfy the requirements of Code §457(g) *(Choose one or more of (a), (b) or (c) as applicable)*

[ ] (a) **Custodial account(s).**

[X] (b) **Annuity contract(s).**

[ ] (c) *(Specify)* _____

[Note The Employer under (c) may wish to identify the custodial accounts or annuity contracts or to designate a portion of the Deferred Compensation to be held in such vehicles versus held in the Trust.]

PLAN EXECUTION

The Employer hereby agrees to the provisions of the Eligible 457 Prototype Plan, as modified by the elections the Employer has made in this Adoption Agreement, and in witness of its agreement, the Employer, by its duly authorized officer or official, has executed this Adoption Agreement, on this 21st day of August, 2012

Name of Employer County of Galveston

Employer's EIN 74-6000908

Signed [signature]

Mark Henry, County Judge
[Name/Title]

The Trustee, by executing this Adoption Agreement, accepts its position as Trustee and agrees to all of the obligations, responsibilities and duties imposed upon the Trustee under the Prototype Plan and Trust Agreement The Trustee has signified its acceptance, on this 5th day of September, 2012

Name of Trustee. MARK HENRY

Signed [signature]

MARK HENRY / COUNTY JUDGE
[Name/Title]

AMENDMENT FOR PENSION PROTECTION ACT OF 2006 AND OTHER LAW CHANGES (457(b) Plan)

Instructions

Adoption of this Amendment (Articles I through X) enables an employer to comply in form with PPA and other law changes that are effective since the effective date of the 457 final regulations This Amendment reflects guidance issued through May 2008 This Amendment assumes that the employer already has amended the plan for the final 457 regulations issued in 2003 (reflecting EGTRRA) and for automatic rollovers as applicable to governmental plans

Timing of amendment. *An employer may adopt this Amendment currently for an ongoing plan (with appropriate modifications as described in these instructions and in the notes within the Amendment) However, PPA specifically provides that amendments for PPA are not required prior to the last day of the 2009 plan year (the last day of the 2011 plan year for governmental plans) The IRS has not issued any guidance regarding the amendment of a 457(b) plan for non-PPA law changes since the issuance of the final 457 regulations However, we recommend that a governmental employer amend for these provisions by the PPA amendment deadline The IRS has not issued any guidance regarding the timing of amendments (PPA or otherwise) for an eligible 457 plan of a tax-exempt entity Nonetheless, we recommend a tax-exempt employer adopt the Amendment as soon as possible to avoid a 457 plan failure because of non-compliant plan provisions* ***This Amendment is not an IRS model amendment and has not been reviewed by the IRS.***

Governmental vs. tax-exempt 457(b) plan. *All of the Articles of this Amendment may apply to an eligible governmental 457 plan (referred to as a "governmental 457(b) plan") Only the unforeseeable emergency provisions (Article II), the post-severance compensation provisions (Article III) and the QDRO provisions (Article IV) may apply to an eligible 457 plan of a tax-exempt entity The other Articles of this Amendment do not apply to an eligible 457 plan of a tax-exempt entity*

Execution. *We have not designed this Amendment for adoption by a 457 plan sponsor for all adopting employers Instead, each adopting employer must execute the Amendment Also, the employer may need to make modifications to the Amendment to reflect the operation of the employer's plan However, since this Amendment is not a pre-approved document, the employer's mere modification of the Amendment does not have any adverse impact on the validity of the Amendment For example, the employer may modify this Amendment by simply deleting any "deselected" Articles, and then renumbering the remaining Articles that the employer actually adopts*

Election to adopt Amendment provisions. *None of the provisions of this Amendment are mandatory for 457(b) plans except Article III (to the extent the employer permits any deferrals from Post-Severance Compensation) and Article X (as to governmental 457(b) plans), although proposed legislation would make mandatory the non-spouse beneficiary rollover provisions (Article VII)*

> *Article III states the regulatory rule (adopted in the April 2007 final Post-Severance Compensation regulations) that a participant may defer from an amount received following severance from employment only if the amount satisfies the definition of Post-Severance Compensation This provision is mandatory unless the plan currently does not permit deferrals from* ***any*** *compensation following severance from employment (including a participant's paycheck received after the date of severance) Such a provision would be unusual Under Article III, the employer either may elect not to permit* ***any*** *deferrals from Post-Severance Compensation, or may elect the types of Post-Severance Compensation from which a participant may defer*

Article X reflects a participant's ability to roll over directly an eligible rollover distribution after December 31, 2007, to a Roth IRA This provision is mandatory for a governmental 457(b) plan

Check-boxes at the end of each Article (except Article X) allow the employer to "deselect" any Article that is not applicable to the employer's plan This Amendment recites the earliest effective date for each provision If the employer operationally adopted a discretionary provision ***later than*** *the earliest effective date, the employer should modify the effective date of that provision For example, if an employer, as of January 1, 2007, did not permit rollover of non-spouse beneficiary distributions, but decided, beginning July 1, 2007, to permit such rollovers, the employer should modify the language of Article VII to state "for distributions after June 30, 2007," rather than "for distributions after December 31, 2006 " Except for Article III (Post-Severance Compensation) and Article VI (EACA provisions), an employer could adopt this Amendment without modification if the employer operationally has adopted each provision as of the stated effective date* ***However, adoption of Article VI requires the employer to make specific elections, as explained in the notes to Article VI.*** *In addition, the employer must make specific elections if it wishes to change the defaults in Article III, as explained in the notes to Article III*

Specific Articles of this Amendment. *The rest of these Instructions provide a brief explanation of each of the Articles of the Amendment after Article I, the Preamble*

Definition of unforeseeable emergency (Article II). *Article II incorporates 2007 regulatory changes to the definition of unforeseeable emergency for purposes of a 457(b) plan distribution (either governmental or tax-exempt) These changes modify (and expand) the definition of "dependent" in the same manner as the 401(k) final regulations modified the definition of "dependent" for purposes of a 401(k) plan safe harbor hardship distribution While PPA mandated that the IRS modify the rules defining unforeseen emergency to permit a distribution to the participant on account of a need of the participant's beneficiary under the plan that would constitute an unforeseeable emergency if it occurred with respect to the participant's spouse or dependent (see PPA §826), the 2003 final 457 regulations already included references to an unforeseeable emergency of the beneficiary While it is not clear whether the 2003 final regulations referenced a participant's designated beneficiary (during the participant's lifetime) rather than the participant's death beneficiary (following the participant's death), the IRS did not modify the regulatory provisions defining an unforeseeable emergency when it updated the regulations in April 2007 (following the PPA mandate), except for the definition of "dependent" as reflected in this Amendment Therefore, assuming the April 2007 regulations comply with the PPA mandate, the 2003 regulations already permitted the beneficiary unforeseeable emergency mandated by PPA*

Post-Severance Compensation (Article III). *A 457(b) plan (either governmental or tax-exempt) can permit deferrals (elected either by a participant or by the employer) from Post-Severance Compensation only as defined in the regulations See Treas Reg §1 457-4(d) The definition of Post-Severance Compensation for this purpose mirrors the definition of Post-Severance Compensation for purposes of the 415 limitations adopted in the 2007 final 415 regulations An employer may elect under Article III not to permit deferrals from Post-Severance Compensation or to permit deferrals from* ***any or all*** *of the Post-Severance Compensation categories, but Article III provides a default that adopts some, but not all, of the permitted categories However, Article III permits the employer to "deselect" any category of Post-Severance Compensation in the default, and to elect any category not in the default The introductory note to Article III explains the default provisions of that Article*

EACA provisions (Article VI). *A governmental 457(b) plan may include automatic enrollment provisions that satisfy the requirements for an eligible automatic contribution arrangement ("EACA") A EACA normally offers two statutory benefits (1) the plan has an extended period, without the imposition of an employer excise tax, to make corrective distributions in case of an ADP or ACP test failure, and (2)*

the plan may provide for a 90-day permissible withdrawal period for a participant who initially is subject to the automatic enrollment provisions, but who does not wish to defer the automatic enrollment amounts Since a governmental 457(b) plan is not subject to the ADP or ACP test, the 90-day permissible withdrawal period is the only benefit to a governmental 457(b) plan of satisfying the EACA rules Since a governmental 457(b) plan is not subject to Title I of ERISA, the plan with a EACA feature does not have to invest the automatic deferrals in a qualified default investment alternative ("QDIA"), as does a plan subject to Title I See Prop Treas Reg §1 414(w)-1(b)(4) Of course, the employer should not adopt this Article unless the employer has operated or intends to operate the Plan as a EACA

Hurricane relief (Article VIII). *Article VIII of this Amendment incorporates the hurricane relief granted to Hurricane Katrina victims by KETRA, and extended to Hurricanes Rita and Wilma victims by GOZone Qualified hurricane distributions and the increased loan limit available to qualified individuals under the statutory hurricane relief provisions were not available after December 31, 2006 This Amendment does not incorporate the guidance of Announcement 2005-70, which permitted retirement plans to make certain hardship or emergency distributions, and loans, to individuals affected by Hurricane Katrina, and applied liberalized rules to hardship or emergency distributions and loans While the relief under Announcement 2005-70 applied to governmental 457(b) plans, a governmental employer permitting the relief under Announcement 2005-70 had to amend its plan to permit the relief by the last day of the 2006 plan year In contrast, a governmental employer may adopt an amendment to incorporate the statutory hurricane relief by the last day of the first plan year beginning on or after January 1, 2009 (i e , the end of the 2009 plan year) See Code §1400Q(d)(2)(A), flush language If the employer adopted some, but not all, of the available statutory hurricane relief provisions, the employer will need to modify the Amendment accordingly The employer should "deselect" Article VIII if the plan operationally did* ***not*** *apply the hurricane relief provisions*

Health and long-term care distributions (Article IX). *PPA provided for an election to exclude from gross income, for taxable years beginning after December 31, 2006, certain distributions from a governmental 457(b) plan used to pay qualified health insurance premiums of an Eligible Retired Public Safety Officer This election is inapplicable where the plan does not cover Eligible Retired Public Safety Officers While the IRS may not require plan language to implement the provisions of this income exclusion, we include "enabling" provisions in the Amendment*

Other PPA provisions (Articles IV, V, VII and X). *Article IV is a minor clarification regarding the scope of a qualified domestic relations order ("QDRO"), which any 457(b) plan (either governmental or tax-exempt) which applies the QDRO provisions typically would adopt Article V extends the notice period prior to an eligible rollover distribution from 90 days to 180 days Most plans have taken advantage of this provision Article VII adopts the PPA non-spouse beneficiary rollover provisions The employer should "deselect" Article VII if the plan operationally has not permitted non-spouse beneficiary rollovers As stated above, Article X recognizes a participant's ability to roll over directly an eligible rollover distribution after December 31, 2007, to a Roth IRA, and is mandatory*

AMENDMENT FOR 457(b) PLAN

County of Galveston, Texas, as Employer sponsor ("Employer"), adopts this Amendment to the Galveston County Deferred Compensation Plan ("Plan")

RECITALS

Recent law changes, including the Pension Protection Act of 2006 ("PPA"), affect the Plan, and

The Plan gives the Employer the authority to make amendments to the Plan, and the Employer wishes to update the Plan for law changes currently in effect

The Employer therefore amends the Plan by adding the following provisions to the Plan

ARTICLE I
PREAMBLE

1 1 **Adoption and effective date of Amendment** The Employer adopts this Amendment to the Plan to reflect recent law changes This Amendment is effective as indicated below for the respective provisions

1 2 **Superseding of inconsistent provisions** This Amendment supersedes the provisions of the Plan to the extent those provisions are inconsistent with the provisions of this Amendment

1 3 **Employer's election.** The Employer adopts all Articles of this Amendment, except those Articles which the Employer specifically elects not to adopt

1 4 **Construction.** Any "Section" reference in this Amendment refers only to this Amendment, and is not a reference to the Plan The Article and Section numbering in this Amendment is solely for purposes of this Amendment, and does not relate to the Plan article, section or other numbering designations

ARTICLE II
DEFINITION OF UNFORESEEABLE EMERGENCY

2 1 **Application.** Effective for taxable years beginning after December 31, 2001, this Article II applies only if the Plan permits a distribution to a Participant on account of an unforeseeable emergency

2 2 **Definition of unforeseeable emergency.** An unforeseeable emergency is a severe financial hardship of a Participant or Beneficiary resulting from (1) illness or accident of the Participant, the Participant's Beneficiary, or the Participant's or Beneficiary's spouse or dependent (as defined in Code §152, and, for taxable years beginning on or after January 1, 2005, without regard to Code §152(b)(1), (b)(2), and (d)(1)(B)), (2) loss of the Participant's or Beneficiary's property due to casualty, (3) the need to pay for the funeral expenses of the Participant's or Beneficiary's spouse or dependent (as defined in Code §152, and, for taxable years beginning on or after January 1, 2005, without regard to Code §152(b)(1), (b)(2), and (d)(1)(B)), or (4) other similar extraordinary and unforeseeable circumstances arising from events beyond the Participant's or Beneficiary's control

2 3 **Definition of Beneficiary.** The Participant's Beneficiary is a person who a Participant designates and who is or may become entitled to a Participant's Plan account upon the Participant's death

[Note If the Plan does not permit distributions on account of unforeseeable emergency, the Employer should check "Article II is not adopted" below]

[ ] Article II is not adopted.

ARTICLE III
DEFERRALS FROM POST-SEVERANCE COMPENSATION

[Default This Article III provides that in the absence of an alternative election by the Employer (1) a Participant may defer (or the Employer may make Employer contributions to the Plan) from regular pay (as described in Section 3 2(a)) and from leave cashouts and deferred compensation (as described in Section 3 2(b)), but not from salary continuation payments for military service Participants (as described in Section 3 2(c)) or from salary continuation payments for disabled Participants (as described in Section 3 2(d)) The Employer may reverse any of these default elections, by checking the appropriate box If the Employer elects in Section 3 2(d) to include salary continuation payments for disabled Participants, the Employer ***also*** *must elect whether to apply the provision only to non-highly compensated Participants, or to apply the provision to all Participants for the fixed or determinable period specified in the election in Section 3 2(d)(1), and may apply Section 3 2(d) only if the Employer's disability plan actually provides disability compensation to all Participants If the Plan currently does not permit (and the Employer does not wish to permit) deferrals from* ***any*** *compensation following Severance from Employment (including a Participant's last paycheck received after the date of severance), the Employer should check "Article III is not adopted" below]*

3 1 **Post-severance deferrals limited to Post-Severance Compensation.** For taxable years beginning after December 31, 2001, deferrals are permitted from an amount received following Severance from Employment only if the amount is Post-Severance Compensation as defined in Section 3 2

3 2 **Post-Severance Compensation defined.** Post-Severance Compensation for purposes of this Article III includes the amounts described in (a) and (b) below, paid after a Participant's Severance from Employment with the Employer, but only to the extent such amounts are paid by the later of 2½ months after Severance from Employment or the end of the calendar year that includes the date of such Severance from Employment The Employer, by its election in this Amendment, may elect to *exclude* from the definition of Post-Severance Compensation the amounts described in (a) or (b) below. The Employer, by its election in this Amendment, also may elect to *include* in the definition of Post-Severance Compensation the amounts described in (c) or (d) below, or both

(a) Regular pay. Post-Severance Compensation *includes* (unless the Employer elects either in (a)(1) or in (a)(2) below not to include some or all of the amounts described in this (a)) regular pay after Severance of Employment if (i) the payment is regular compensation for services during the Participant's regular working hours, or compensation for services outside the Participant's regular working hours (such as overtime or shift differential), commissions, bonuses, or other similar payments, and (ii) the payment would have been paid to the Participant prior to a Severance from Employment if the Participant had continued in employment with the Employer *(Choose only one of (1) or (2), if applicable)*

[ ] (1) Election *not* to include regular pay. The Employer elects not to include any of the amounts described in this Section 3 2(a) as Post-Severance Compensation

[ ] (2) Election to *include last paycheck ONLY*. Of the amounts described in this Section 3 2(a), the Employer elects to include only such amounts that are included in the final paycheck paid to the Participant at the end of the pay period that includes the Participant's date of severance from employment

Note The Employer may modify the provisions of this election to conform to the Employer's particular pay practices (for example, to include a separate bonus check paid to the employee on the same day as the final paycheck)

(b) **Leave cashouts and deferred compensation.** Post-Severance Compensation *includes* (unless the Employer elects in (b)(1) below not to include all of the amounts described in this (b)) leave cashouts if those amounts would have been included in the definition of Compensation if they were paid prior to the Participant's Severance from Employment, and the amounts are payment for unused accrued bona fide sick, vacation, or other leave, but only if the Participant would have been able to use the leave if employment had continued In addition, Post-Severance Compensation includes payments of deferred compensation if the compensation would have been included in the definition of Compensation if it had been paid prior to the Participant's Severance from Employment, and the compensation is received pursuant to a nonqualified unfunded deferred compensation plan, but only if the payment would have been paid at the same time if the Participant had continued in employment with the Employer and only to the extent that the payment is includible in the Participant's gross income

[ ] **(1) Election *not* to include leave cashouts and deferred compensation.** The Employer elects not to include any of the amounts described in this (b) as Post-Severance Compensation

(c) **Salary continuation payments for military service Participants.** Post-Severance Compensation does *not* include (unless the Employer elects (c)(1) below to include all of the amounts described in this (c)) payments to an individual who does not currently perform services for the Employer by reason of Qualified Military Service (as described in Code §414(u)(1)) to the extent those payments do not exceed the amounts the individual would have received if the individual had continued to perform services for the Employer rather than entering Qualified Military Service

[ ] **(1) Election to *include* salary continuation payments for military service Participants.** The Employer elects to *include* all of the amounts described in this (c) as Post-Severance Compensation

(d) **Salary continuation payments for disabled Participants.** Post-Severance does *not* include Compensation paid to a Participant who is permanently and totally disabled (as defined in Code §22(e)(3)) (unless the Employer elects (d)(1) below to include all of the amounts described in this (d)) If elected, this provision will apply either only to non-highly compensated Participants or to all Participants for the fixed or determinable period specified in Section 3 2(d)(1)(ii) below

[ ] **(1) Election to *include* salary continuation payments for disabled Participants.** The Employer elects to *include* all of the amounts described in this (d) as Post-Severance Compensation. In addition, this provision will apply as follows *(Choose only one of (i) or (ii))*

[ ] **(i) Non-highly compensated only.** This provision applies only to disabled employees who are non-highly compensated employees immediately before becoming disabled

[ ] **(ii) Fixed or determinable period.** This provision applies to all employees who are permanently and totally disabled, for the following period _____ *(e g , for a period of two years from the date of the disability) [Note The election in this Section 3 2(d)(1)(ii) applies only if the Employer's disability plan actually provides disability payments to all permanently and totally disabled Participants]*

3 3 **Limitation on Post-Severance Compensation.** Any payment of Compensation paid after Severance of Employment that is not described in Section 3 2(a), (b), (c) or (d) above is not Post-

Severance Compensation, even if payment is made by the later of 2½ months after Severance from Employment or by the end of the calendar year that includes the date of such Severance of Employment

[Note If the Employer operationally has not permitted deferrals from any Post-Severance Compensation, the Employer should check "Article III is not adopted" below]

[ ] **Article III is not adopted.** The Plan does not permit any deferral contributions from any amount a Participant receives following Severance from Employment

ARTICLE IV
QUALIFIED DOMESTIC RELATIONS ORDERS

4 1 **Permissible QDROs** Effective April 6, 2007, a domestic relations order that otherwise satisfies the requirements for a qualified domestic relations order ("QDRO") will not fail to be a QDRO (i) solely because the order is issued after, or revises, another domestic relations order or QDRO, or (ii) solely because of the time at which the order is issued, including issuance after the annuity starting date or after the Participant's death

4 2 **Other QDRO requirements apply** A domestic relations order described in Section 4 1 is subject to the same requirements and protections that apply to QDROs

[Note This Article IV reflects a PPA provision which mandated DOL clarification of the QDRO statute The DOL issued interim final regulations on March 7, 2007 If the plan does not provide for distributions pursuant to a QDRO, the Employer should check "Article IV is not adopted" below]

[ ] **Article IV is not adopted.**

THE REMAINING ARTICLES OF THIS AMENDMENT DO NOT APPLY TO A NON-GOVERNMENTAL TAX-EXEMPT ENTITY. IF THE EMPLOYER IS A TAX-EXEMPT ENTITY, THE EMPLOYER SHOULD CHECK "The subsequent provisions of this Amendment are not adopted." ALTERNATIVELY, THE EMPLOYER MAY DELETE THE TEXT OF ARTICLES V THROUGH X.

[ ] **The subsequent provisions of this Amendment are not adopted.**

ARTICLE V
PARTICIPANT DISTRIBUTION NOTIFICATION

5 1 **180-day notification period** For any distribution notice issued in plan years beginning after December 31, 2006, any reference to the 90-day maximum notice period prior to distribution in applying the notice requirements of Code §402(f) (the rollover notice relating to an eligible rollover distribution), means180 days

[Note Although a plan need not extend to 180 days the 90-day earliest notice date provided under prior law, there is no reason for an employer not to take advantage of the extended notice period This Amendment provides enabling language]

[ ] **Article III is not adopted.**

ARTICLE VI
ELIGIBLE AUTOMATIC CONTRIBUTION ARRANGEMENT

[Default This Article VI provides that in the absence of an alternative election by the Employer (1) the Automatic Deferral applies to all Participants, except those who have in effect a Salary Reduction Agreement on the Automatic Deferral effective date (regardless of amount), and (2) the permissible withdrawal right applies to all Participants who have automatic deferrals under the EACA. If the Employer accepts these default provisions, the Employer need not make an election in this Section, but ***still must complete the Automatic Deferral Percentage in Section 6.1(a).*** *If the Employer wishes to deviate from either or both of the defaults, the Employer must make either or both alternative elections, as applicable, in Section 6 1(c) and/or Section 6 4(d) of this Article VI Note also that Section 6 1 specifies a EACA effective date commencing with the 2008 plan year If this is not correct, the Employer will need to modify Section 6 1 If the Employer does not wish to have Automatic Deferrals, the Employer should check "Article VI is not adopted" below]*

6 1 **Eligible Automatic Contribution Arrangement ("EACA").** Effective for plan years beginning after December 31, 2007, the Employer maintains a Plan with automatic enrollment provisions as an Eligible Automatic Contribution Arrangement ("EACA"), and the Employer elects to apply the permissible withdrawal provisions as described in Section 6 4 A Plan is a EACA as defined in Code §414(w) if the Plan satisfies (1) the uniformity requirements under Section 6 2, and (2) the notice requirements under Section 6 3

(a) **Automatic Deferral Percentage.** The Employer will withhold _____% from a Participant's Compensation each payroll period

[Note The Employer may modify this provision if it wishes to provide for a graduated automatic deferral percentage based on years of participation in the EACA, rather than a fixed percentage that applies to all Participants

(b) **Participants subject to Automatic Deferral: disregard all current deferral elections.** Unless the Employer elects in Section 6 1(c) immediately below to apply the Automatic Deferral to a different group of Participants, the Automatic Deferral applies to all Participants, except those who have in effect a salary reduction agreement on the Automatic Deferral effective date, regardless of the elective deferral amount (including zero) under the Agreement

(c) [ ] **Alternative election regarding Participants subject to Automatic Deferral: disregard Participants deferring at least Automatic Deferral Percentage.** In lieu of Section 6 1(b) the Employer elects to apply the Automatic Deferral to all Participants, except those who, on the Automatic Deferral effective date, are deferring an amount which is at least equal to the Automatic Deferral Percentage

[Note The Employer may modify this provision if it applies or has applied the Automatic Deferral to a different group of Participants, such as all Participants on the Automatic Deferral effective date (regardless of any prior deferral election)]

6 2 **Uniformity.** The Plan satisfies the uniformity requirement if the Plan provides an Automatic Deferral Percentage that is a uniform percentage of Compensation However, the Plan does not violate the uniform Automatic Deferral Percentage merely because

(a) **Years of participation.** The Automatic Deferral Percentage varies based on the number of plan years the Participant has participated in the Plan while the Plan has applied Automatic Deferral provisions, or

(b) **No reduction from prior default percentage.** The Plan does not reduce an Automatic Deferral Percentage that, immediately prior to the effective date of the EACA provisions was higher (for any Participant) than the Automatic Deferral Percentage

6 3 **EACA notice.** The plan satisfies the notice requirement if the Plan Administrator annually provides a EACA notice to each Participant a reasonable period prior to each plan year the Employer maintains the Plan as a EACA ("EACA Plan Year")

(a) **Deemed reasonable notice/new Participant.** The Plan Administrator is deemed to provide timely notice if the Plan Administrator provides the EACA notice at least 30 days and not more than 90 days prior to the beginning of the EACA Plan Year

(b) **Mid-year notice/new Participant or Plan.** If (a) an Employee becomes eligible to make elective deferrals in the Plan during a EACA Plan Year but after the Plan Administrator has provided the annual EACA notice for that plan year, or (b) the Employer adopts mid-year a new Plan as a EACA, the Plan Administrator must provide the EACA notice no later than the date the Employee becomes eligible to make elective deferrals

(c) **Content.** The EACA notice must provide comprehensive information regarding the Participants' rights and obligations under the Plan and must be written in a manner calculated to be understood by the average Participant

6 4 **EACA permissible withdrawal.** A Participant who has Automatic Deferrals under the EACA may elect to withdraw all the Automatic Deferrals (and allocable earnings) under the provisions of this Section 6 4, unless the Employer elects in Section 6 4(d) below to limit the group of Participants who are eligible for the permissible withdrawal If the Employer elects to limit the group of Participants who are eligible for the permissible withdrawal, only a Participant who is a member of that eligible group may make the election to withdraw

(a) **Amount.** If a Participant elects a permissible distribution under this Section 6 4 the Plan must make a distribution equal to the amount (and only the amount) of the Automatic Deferrals made under the EACA (adjusted for allocable gains and losses to the date of the distribution)

(b) **Timing.** The Participant may make an election to withdraw the Automatic Deferrals under the EACA no later than 90 days after the date of the first Automatic Deferral under the EACA For this purpose, the date of the first Automatic Deferral is the date that the Compensation subject to the Automatic Deferral otherwise would have been includible in the Participant's gross income. The effective date of the election must not be later than the last day of the payroll period that begins after the date the Participant makes the election to withdraw the Automatic Deferrals

(c) **Fees.** The Plan Administrator may reduce the permissive distribution amount by any generally applicable fees However, the Plan may not charge a different fee for distribution under this Section 6 4 than applies to other distributions

(d) [ ] **Alternative election to limit Permissible withdrawals.** The Employer elects to limit permissible withdrawal of EACA Automatic Deferrals as follows (*Choose (1) or choose and complete (2))*

[ ] **(1) Participant with EACA Automatic Deferrals only.** Only Participants who do not have Deferral Contributions in the Plan prior to the EACA's effective date may elect a permissible withdrawal

[ ] **(2) Describe:**_____

6 5 **Definitions.**

(a) **Definition of Automatic Deferral.** An Automatic Deferral is an elective deferral that results from the operation of the Plan's automatic enrollment provisions Under the Automatic Deferral, the Employer automatically will reduce by the Automatic Deferral Percentage elected in this Amendment the Compensation of each Participant subject to the Automatic Deferral, as specified in Section 6 1 of this Amendment The Plan Administrator will cease to apply the Automatic Deferral to a Participant who makes a Contrary Election as defined in this Section 6 5

(b) **Definition of Automatic Deferral Percentage/ Increases.** The Automatic Deferral Percentage is the amount of Automatic Deferral which the Employer elects in this Amendment (including any scheduled increase to the Automatic Deferral Percentage the Employer may elect by a modification of this Amendment) If a Participant has elected to defer an amount which is less than the Automatic Deferral Percentage the Employer has elected in this Amendment, and the Employer elects to apply the Automatic deferral to all Participants except those who, on the effective date of the Automatic Deferral, are deferring an amount which is at least equal to the Automatic Deferral Percentage, the Automatic Deferral Percentage includes only the incremental amount necessary to increase the Participant's Elective Deferral to equal the Automatic Deferral Percentage (including any scheduled increases thereto)

(c) **Definition of Contrary Election.** A Contrary Election is a Participant's election made after the effective date of the Automatic Deferral not to defer any Compensation or to defer an amount which is more or less than the Automatic Deferral percentage

(d) **Effective Date of Contrary Election.** A Participant's Contrary Election generally is effective as of the first payroll period which follows the Participant's Contrary Election. However, a Participant may make a Contrary Election which is effective (a) for the first payroll period in which he/she becomes a Participant if the Participant makes a Contrary Election within a reasonable period following the Participant's Entry Date and before the Compensation to which the Election applies becomes currently available, or (b) for the first payroll period following the effective date of the Automatic Deferral, if the Participant makes a Contrary Election not later than the effective date of the Automatic Deferral A Participant who makes a Contrary Election is not thereafter subject to the Automatic Deferral or to any scheduled increases thereto, even if the Participant later revokes or modifies the Contrary Election A Participant's Contrary Election continues in effect until the Participant subsequently changes his/her salary reduction agreement

[Note If the Employer operationally has not applied the EACA provisions, the Employer should check "Article VI is not adopted" below]

[X] Article VI is not adopted.

ARTICLE VII
DIRECT ROLLOVER OF NON-SPOUSE BENEFICIARY DISTRIBUTION

7 1 **Non-spouse beneficiary rollover right** For distributions after December 31, 2006, a non-spouse beneficiary who is a "designated beneficiary" under Code §401(a)(9)(E) and the regulations thereunder, by a direct trustee-to-trustee transfer ("direct rollover"), may roll over all or any portion of his/her distribution to an individual retirement account (including a Roth IRA) the beneficiary establishes for purposes of receiving the distribution In order to be able to roll over the distribution, the distribution otherwise must satisfy the definition of an eligible rollover distribution

7 2 **Certain requirements not applicable.** Although a non-spouse beneficiary may roll over directly a distribution as provided in Section 7 1, the distribution is not subject to the direct rollover requirements of Code §401(a)(31), the notice requirements of Code §402(f) or the mandatory withholding requirements of Code §3405(c) If a non-spouse beneficiary receives a distribution from the Plan, the distribution is not eligible for a "60-day" rollover

7 3 **Trust beneficiary** If the Participant's named beneficiary is a trust, the Plan may make a direct rollover to an individual retirement account on behalf of the trust, provided the trust satisfies the requirements to be a designated beneficiary within the meaning of Code §401(a)(9)(E)

7 4 **Required minimum distributions not eligible for rollover.** A non-spouse beneficiary may not roll over an amount which is a required minimum distribution, as determined under applicable Treasury regulations and other IRS guidance

7 5 **Mandatory default rollover not applicable.** The mandatory default rollover provisions of the Plan under Code §401(a)(31)(B), relating to mandatory distributions (of an eligible rollover distribution) greater than $1,000, do not apply to distributions to a non-spouse beneficiary

[Note The rollover option described in this Article VII is not mandatory If the Employer has elected not to provide the rollover for non-spouse beneficiaries, the Employer should check 'Article VII is not adopted" below

[ ] Article VII is not adopted.

ARTICLE VIII
STATUTORY HURRICANE RELIEF

8 1 **Qualified Hurricane Distribution** A Participant may take a Qualified Hurricane Distribution, provided that the aggregate amount of Qualified Hurricane Distributions received by a Participant for any taxable year (from all plans maintained by the Employer, including any member of any controlled group that includes the Employer) may not exceed $100,000

(a) Repayment of distribution If the Plan permits rollover contributions, a Participant who receives a Qualified Hurricane Distribution, at any time during the 3-year period beginning on the day after receipt of the distribution, may make one or more contributions to the Plan, as rollover contributions, in an aggregate amount not to exceed the amount of such distribution *[Note The Plan must permit rollover contributions for a Participant to repay the distribution, since the repayment is a rollover contribution]*

(b) Definition of Qualified Hurricane Distribution A "Qualified Hurricane Distribution" means a distribution defined in Code §1400Q(a)(4)(A), which does not exceed the amount limitation described in this Section 8 1

8 2 **Recontribution of home purchase withdrawal** If the Plan permits rollover contributions, a Participant who received a Qualified Distribution (relating to a hardship distribution to purchase or construct a principal residence in an applicable hurricane disaster area), but who, on account of the hurricane, did not use the funds to purchase or construct a principal residence, may make one or more contributions to the Plan, as rollover contributions, during the Applicable Period, in an aggregate amount not to exceed the amount of such Qualified Distribution *[Note The Plan must permit rollover contributions for a Participant to recontribute the distribution, since the recontribution is a rollover contribution]*

(a) Definition of Qualified Distribution A "Qualified Distribution" for purposes of this Section 8 2 means any qualified Katrina distribution, any qualified Rita distribution, and any qualified Wilma distribution, as defined in Code §1400Q(b)(2)

(b) Definition of Applicable Period The "Applicable Period" for purposes of this Section 8 2 means the applicable period as defined in Code §1400Q(b)(3)

8 3 **Increased loan limit and repayment extension** Notwithstanding the loan limitation that otherwise would apply, the Plan will determine the loan limit under Code §72(p)(2)(A) for a loan

to a Qualified Individual made during the Applicable Period by substituting "$100,000" for "$50,000," and by substituting "the present value of the nonforfeitable accrued benefit of the employee under the Plan" for "one-half of the present value of the nonforfeitable accrued benefit of the employee under the Plan " *[Note This provision assumes the Plan Administrator applied the maximum hurricane relief provisions available under Code §1400Q The Employer should modify this Section 8 3 if the Plan Administrator applied a different provision For example, if the Plan Administrator applied an increased loan limit but retained the 50% of vested account balance limit, the Employer should delete the remainder of Section 8 3 after "$50,000," and end the sentence with "$50,000 "]*

(a) **Extension of certain repayments** If a Qualified Individual has an outstanding loan from the Plan on or after the Qualified Beginning Date, then (i) if the date for any repayment of such loan occurs during the period beginning on the Qualified Beginning Date and ending on December 31, 2006, the due date is extended for one year, (ii) the Plan will adjust any subsequent repayments to reflect the extension of the due date under (i) and any interest accrued during the extension, and (iii) the Plan will disregard the period of extension described in (i) in determining the 5-year period and the loan term under Code §72(p)(2)(B) or (C)

(b) **Definition of Qualified Individual.** A "Qualified Individual" for purposes of this Section 8 3 means any qualified individual as defined in Code §1400Q(c)(3)

(c) **Definition of Applicable Period.** The "Applicable Period" for purposes of this Section 8 3 means the applicable period as defined in Code §1400Q(c)(4)

(d) **Definition of Qualified Beginning Date.** The "Qualified Beginning Date" for purposes of this Section 8 3 means the qualified beginning date as defined in Code §1400Q(c)(4)

[Note The hurricane relief provided for in this Article VIII is not mandatory If the Employer operationally did not apply any statutory hurricane relief provisions, the Employer should check "Article VIII is not adopted" below]

[X] Article VIII is not adopted.

ARTICLE IX
HEALTH AND LONG-TERM CARE INSURANCE DISTRIBUTIONS

9 1 **Election to deduct from distribution** For distributions in taxable years beginning after December 31, 2006, an Eligible Retired Public Safety Officer may elect annually for that taxable year to have the Plan deduct an amount from a distribution which the Eligible Retired Public Safety Officer otherwise would receive and include in income The plan will pay such deducted amounts directly to the provider as described in Section 9 2, to pay qualified health insurance premiums

9 2 **Direct payment.** The Plan will pay directly to the provider of the accident or health insurance plan or qualified long-term care insurance contract the amounts the Eligible Retired Public Safety Officer has elected to have deducted from the distribution Such amounts may not exceed the lesser of $3,000 or the amount the Participant paid for such taxable year for qualified health insurance premiums, and which otherwise complies with Code §402(l)

9 3 **Definitions.**

(a) **Eligible retired public safety officer** An "Eligible Retired Public Safety Officer" is an individual who, by reason of disability or attainment of normal retirement age, is separated from service as a Public Safety Officer with the Employer

(b) Public safety officer A "Public Safety Officer" has the same meaning as in Section 1204(9)(A) of the Omnibus Crime Control and Safe Streets Act of 1968 (42 U S C 3796b(9)(A))

(c) Qualified health insurance premiums The term "qualified health insurance premiums" means premiums for coverage for the Eligible Retired Public Safety Officer, his/her spouse, and dependents, by an accident or health insurance plan or qualified long-term care insurance contract (as defined in Code §7702B(b)).

[Note If the Employer does not employ any employees who are or may be Eligible Retired Public Safety Officers, the Employer may check "Article IX is not adopted" below]

[X] Article IX is not adopted.

ARTICLE X
DIRECT ROLLOVER TO ROTH

10 1 **Roth IRA rollover.** For distributions made after December 31, 2007, a Participant may elect to roll over directly an eligible rollover distribution to a Roth IRA described in Code §408A(b)

Except as provided in this Amendment, the Plan remains unchanged and in full force and effect

IN WITNESS WHEREOF, the Employer has executed this Amendment on this 21st day of August 2012

COUNTY OF GALVESTON, TEXAS
Employer

By Mark Henry
Mark Henry, County Judge
[Print Name, Title]

AGENDA ITEM #10

GALVESTON COUNTY
RURAL RAIL TRANSPORTATION DISTRICT BOARD

Established under section 41 1 Railroads – Rural rail transportation districts were Created by statute, in 1981

Composition: 5 members
(5) Commissioners Court

Term 2 years
Expires July 31

Commissioners Court Appointees

James "Ossie" Matthews 531 Texas Ave Texas City, TX 77590	First Appointed Reappointed Term Expires Appointed By.	August, 2012 July 31, 2014 Commissioner Pct 1
Ronnie Moore (Business Address) 916 East Highway 6 Alvin, TX 77511 281-331-8726	First Appointed: Reappointed Term Expires. Appointed By	August, 2012 July 31, 2014 Commissioner Pct 2
Richard Batie 1514 Avenue M Galveston, TX 77550 409-750-8688	First Appointed Reappointed Term Expires Appointed By	August, 2012 July 31, 2014 Commissioner Pct 3
Simon Urbanic 505 Acacia N League City, TX 77573	First Appointed Reappointed Term Expires Appointed By	August, 2012 July 31, 2014 Commissioner Pct 4
John Ford 5110 Avenue U Galveston, TX 77551	First Appointed. Reappointed· Term Expires Appointed By	August, 2012 July 31, 2014 County Judge

2012045741

1 PG

THE STATE OF TEXAS §
§
COUNTY OF GALVESTON §

STATEMENT OF DIRECTOR OF THE GALVESTON COUNTY RURAL RAIL TRANSPORTATION DISTRICT CREATED UNDER ARTICLE, 6550c, V.A.T.S.

I, **Richard Batie**, a legal resident of Galveston County, do solemnly swear (or affirm) that I have not directly or indirectly paid, offered, promised to pay, contributed, or promised to contribute, any money or thing of value, or promised any public officer or employment in exchange for the opportunity to serve on the board of directors of the Galveston County Rural Rail Transportation District, created under Article 6550c, V A T S

District Board Member

SUBSCRIBED AND SWORN TO before me, the undersigned authority, on this the 21st day of August, 2012, by Roxana Lewis to certify which witness my hand and seal of office

ROXANA GAIL LEWIS
Notary Public, State of Texas
My Commission Expires
February 14, 2015

NOTARY PUBLIC IN AND FOR THE STATE OF TEXAS

Roxana Lewis
Notary's Printed Name

FILED AND RECORDED

OFFICIAL PUBLIC RECORDS

2012045741

August 23, 2012 01 16 31 PM
FEE $0 00
Dwight D Sullivan, County Clerk
Galveston County, TEXAS

2012045742

1 PG

THE STATE OF TEXAS §
§
COUNTY OF GALVESTON §

STATEMENT OF DIRECTOR OF THE GALVESTON COUNTY RURAL RAIL TRANSPORTATION DISTRICT CREATED UNDER ARTICLE, 6550c, V.A.T.S.

I, **Simon Urbanic**, a legal resident of Galveston County, do solemnly swear (or affirm) that I have not directly or indirectly paid, offered, promised to pay, contributed, or promised to contribute, any money or thing of value, or promised any public officer or employment in exchange for the opportunity to serve on the board of directors of the Galveston County Rural Rail Transportation District, created under Article 6550c, V A T S

District Board Member

SUBSCRIBED AND SWORN TO before me, the undersigned authority, on this the 21st day of August, 2012, by Roxana Lewis to certify which witness my hand and seal of office

ROXANA GAIL LEWIS
Notary Public, State of Texas
My Commission Expires
February 14, 2015

NOTARY PUBLIC IN AND FOR THE STATE OF TEXAS

Roxana Lewis
Notary's Printed Name

FILED AND RECORDED

OFFICIAL PUBLIC RECORDS

2012045742

August 23, 2012 01 16 31 PM
FEE $0 00
Dwight D Sullivan, County Clerk
Galveston County, TEXAS

2012045743

1 PG

THE STATE OF TEXAS §
§
COUNTY OF GALVESTON §

STATEMENT OF DIRECTOR OF THE GALVESTON COUNTY RURAL RAIL TRANSPORTATION DISTRICT CREATED UNDER ARTICLE, 6550c, V.A.T.S.

I, **John Ford**, a legal resident of Galveston County, do solemnly swear (or affirm) that I have not directly or indirectly paid, offered, promised to pay, contributed, or promised to contribute, any money or thing of value, or promised any public officer or employment in exchange for the opportunity to serve on the board of directors of the Galveston County Rural Rail Transportation District, created under Article 6550c, V A T S

District Board Member

SUBSCRIBED AND SWORN TO before me, the undersigned authority, on this the 21st day of August, 2012, by Roxana Lewis to certify which witness my hand and seal of office

ROXANA GAIL LEWIS
Notary Public, State of Texas
My Commission Expires
February 14, 2015

NOTARY PUBLIC IN AND FOR THE STATE OF TEXAS

Roxana Lewis
Notary's Printed Name

FILED AND RECORDED

OFFICIAL PUBLIC RECORDS

2012045743

August 23, 2012 01 16 31 PM
FEE $0 00
Dwight D Sullivan, County Clerk
Galveston County, TEXAS

AGENDA ITEM #11

GALVESTON COUNTY HEALTH DISTRICT

4C's Clinics, Public Health Programs, Galveston E.M.S.

John A Zendt Chair
United Board of Health

Milton Howard DDS Chair
4C's Governing Board

Harlan "Mark" Guidry, MD MPH
Chief Executive Officer

www gchd org

May 1, 2012 (Updated)

The Honorable Mark Henry
County Judge
722 Moody
Galveston, Texas 77550

Dear Judge Henry

On April 30, 2012, the terms of service for six members of the United Board of Health will expire, which call for Commissioner's Court and member city action Four members are able to continue to serve if re-appointed Two members are unable to continue to serve. All members will continue to serve pending County and City actions New expiration date for members, if re-appointed or new member appointed will be April 30, 2014

Name	Represents	Able to Continue to Serve
Rob Heifner	Mainland Medical Center	NO (Updated) – Mainland will send us name
John Konikowski, MD	Medical Society	YES
Steven Leach, CRNA, DNP	Municipality	YES
Bernard Milstein, MD	Citizen at Large	YES
Dr Bob Baylor	Veterinarians	NO
Walter Treybig III	Engineer	NO
Andy Mann	Municipality	NO (ADDED 6/15/12)

In accordance with United Board of Health By Laws, should a vacancy occur on the Board, new members shall be nominated by the Commissioners' Court of Galveston County with subsequent approval by a majority of the member governments If you have any questions or need additional information, please feel free to contact me at (409) 938-2273

Sincerely,

Harlan "Mark" Guidry, MD, MPH
Chief Executive Officer
Galveston County Health District

I'm following up on our meeting from July 5th when we discussed vacancies on the United Board of Health that will need the Commissioners Court action Please see attached memo with all names/position that cannot serve and those willing to continue to serve Added to the memo as of 6/15 is Andy Mann, Municipality. Below, are suggested names for Engineers from Ronnie Schultz and a Veterinarian that is willing to serve if appointed Also, Mainland Medical Center has their new CEO appointed ~ Mr Michael Ehrat

Mr Ehrat and all members appointed/re-appointed can start when the Commissioners Court nominate them and at least 7 member cities ratify the CC nominations Do you know when the Judge will be able to place these vacancies on the agenda? Please let me know if you have any questions or need additional information Thanks, Pisa

Engineers

- BP- Keith Casey
- Marathon- Connie Bradley
- Valero- Sal Viscontini

Veterinarian

Scott Veterinary Clinic
1810 Loop 197 N
Texas City, TX 77590
Phone: (409) 945-9608
Fax (409) 945-6958
Personal email refereevet@yahoo com

Pisa L. Lewis
Executive Chief of Staff
Galveston County Health District
P O. Box 939
La Marque, TX 77568
(409) 938-2273
(409) 938-2243 Fax

AGENDA ITEM #12

NO

BACK – UP

PROVIDED

AGENDA ITEM #13

Galveston County, #183

Authorization to maintain TCDRS plan provisions

Plan Year 2013

With respect to the participation of Galveston County in the Texas County & District Retirement System (TCDRS) for the 2013 plan year, the following order was adopted

1 Galveston County makes no change in the plan provisions for non-retirees

* 2 With respect to benefit payments being paid to retirees or their beneficiaries, Galveston County **(check one box):**

- [X] does not adopt a cost-of-living adjustment (COLA)
- [ ] adopts a ____% CPI-based COLA
- [ ] adopts a ____% flat-rate COLA

* 3 The required employer contribution rate for Plan Year 2013 will be the following

(a) Required rate without COLA		10 49%	
(b) COLA rate	+	_____	(enter 0 if not adopting a COLA)
(c) **Total required rate** (a + b)	=	10.49%	

* 4 Employers may elect to pay a rate greater than the **total required rate** listed above Galveston County adopts for Plan Year 2013 **(check one box)**

- [X] the **total required rate** listed above
- [ ] add a new elected rate of _____%

5 In the event the 2013 total required rate as set out above exceeds 11%, and if a current waiver of that limit is not on file with TCDRS, the Commissioners Court of Galveston County hereby waives the 11% limit on the rate of employer contributions and such waiver will remain effective with respect to future plan years until properly revoked by official action

Certification

I certify that the foregoing authorization concerning the participation of Galveston County in TCDRS for Plan Year 2013 truly and accurately reflects the official action taken during a properly posted and noticed meeting on August 21, , 2012, by the Commissioners Court of Galveston County as such action is recorded in the official minutes

Mark A. Henry

Authorized Signature, County Judge of Galveston County

Mark A. Henry

Printed Name

Dated August 21, 2012

** Please fill in the required information for items 2, 3 and 4 before signing and sending this document to TCDRS*

AGENDA ITEM #14

U.S. Department of Justice

Civil Rights Division

TCH:RSB:MSR:BJW:par
DJ 166-012-3
2012-3591
2012-3592

Voting Section - NWB
950 Pennsylvania Avenue, NW
Washington, DC 20530

August 8, 2012

Harvey Bazaman, Esq
County Legal Department
722 Moody, 5th Floor
Galveston, Texas 77550-2317

Dear Mr Bazaman:

This refers to the deletion of four early voting locations for the July 31, 2012, primary runoff election for the Democratic and Republican Parties in Galveston County, Texas, submitted to the Attorney General pursuant to Section 5 of the Voting Rights Act of 1965, 42 U S C. 1973c We received your submissions on June 18, 2012

The Attorney General does not interpose any objection to the specified changes However, we note that Section 5 expressly provides that the failure of the Attorney General to object does not bar subsequent litigation to enjoin the enforcement of the changes Procedures for the Administration of Section 5 of the Voting Rights Act of 1965, 28 C.F.R. 51 41

Sincerely,

Maureen S Riordan
for T Christian Herren, Jr
Chief, Voting Section

AGENDA ITEM #15

CITY OF TEXAS CITY, TEXAS

ENGINEERING & PLANNING DEPARTMENT • OFFICE (409) 643-5936 • FAX (409) 949-3001

Mayor
Matthew T Doyle

Commissioners
Mike Land
Dee Ann Haney
Dedrick D. Johnson, Sr
J W "Scooter" Wilson, Jr.
Rick Wilkenfeld
Thelma Bowie

July 30, 2012

RECEIVED
AUG 0 2 2012
GALVESTON COUNTY JUDGE

The Honorable Mark Henry, Galveston County Judge
& Commissioners Court
Galveston County Courthouse
722 Moody Ave
Galveston, Texas 77550

RE Gulf Coast Water Authority
Board of Directors Nomination

Gentlemen

The Gulf Coast Water Authority's Mainland Municipal Advisory Committee is charged with nominating an appointee to the GCWA Board of Directors The Mainland Municipal Advisory Committee unanimously nominates William R Pedersen, P E to continue serving on the Board of Directors for the term September 1, 2012 through August 31, 2014

Respectfully,

Douglas K Kneupper, P E
Mainland Municipal Advisory Committee

Copy: Advisory Committee Members (via e-mail)
Ivan Langford, GCWA

AGENDA ITEM #16

Gaspard, Amanda

From: Foster, Nicholas
Sent. Tuesday, August 14, 2012 4 13 PM
To: agenda
Subject: Santa Fe back up documentation

The Backup documentation for the Santa Fe Generator project is located in the CDBG coordinator's office on the 3rd floor Also another copy of the contract and the construction drawings are located in the Purchasing Agent's office

Thanks,

Nick

Nicholas Foster
CDBG Project Coordinator
722 Moody, 3rd Floor
Galveston, TX 77550
Direct Line 409-770-5358

COUNTY OF GALVESTON

SPECIFICATIONS AND CONTRACT DOCUMENTS

SANTA FE HIGH SCHOOL GENERATOR

LJA PROJECT NO 0384-9003E

COPYRIGHT BY
LJA ENGINEERING, INC
EAST HOUSTON OFFICE
11821 EAST FREEWAY SUITE 400
HOUSTON TEXAS 77029
FRN-F-1386

ACORD®

CERTIFICATE OF LIABILITY INSURANCE

DATE (MM/DD/YYYY) 7/1/2011

THIS CERTIFICATE IS ISSUED AS A MATTER OF INFORMATION ONLY AND CONFERS NO RIGHTS UPON THE CERTIFICATE HOLDER THIS CERTIFICATE DOES NOT AFFIRMATIVELY OR NEGATIVELY AMEND, EXTEND OR ALTER THE COVERAGE AFFORDED BY THE POLICIES BELOW THIS CERTIFICATE OF INSURANCE DOES NOT CONSTITUTE A CONTRACT BETWEEN THE ISSUING INSURER(S), AUTHORIZED REPRESENTATIVE OR PRODUCER, AND THE CERTIFICATE HOLDER

IMPORTANT If the certificate holder is an ADDITIONAL INSURED, the policy(ies) must be endorsed If SUBROGATION IS WAIVED, subject to the terms and conditions of the policy, certain policies may require an endorsement A statement on this certificate does not confer rights to the certificate holder in lieu of such endorsement(s)

PRODUCER
Highpoint Insurance Group LLC
1150 Clear Lake City Blvd
Suite 201
Houston TX 77062

CONTACT NAME Judy Kersh
PHONE (A/C, No, Ext) (281)204-8770 FAX (A/C, No) (281)204 8810
E-MAIL ADDRESS judy@hpigrp com
PRODUCER CUSTOMER ID # 00006645

INSURED
CBJ Group, Inc ; Crescent Engineering, Inc ,
d/b/a: Crescent Electric; Industrial
Instrumentation & Electrical Inc.
d/b/a Industrial I & E
P. O Box 36 La Marque TX 77568

INSURER(S) AFFORDING COVERAGE	NAIC #
INSURER A Catlin Specialty Insurance	
INSURER B Peerless Indemnity	
INSURER C Texas Mutual Insurance Company	22945
INSURER D America First Insurance Company	12696
INSURER E	
INSURER F	

COVERAGES CERTIFICATE NUMBER 11/12 ALL LINES REVISION NUMBER

THIS IS TO CERTIFY THAT THE POLICIES OF INSURANCE LISTED BELOW HAVE BEEN ISSUED TO THE INSURED NAMED ABOVE FOR THE POLICY PERIOD INDICATED NOTWITHSTANDING ANY REQUIREMENT TERM OR CONDITION OF ANY CONTRACT OR OTHER DOCUMENT WITH RESPECT TO WHICH THIS CERTIFICATE MAY BE ISSUED OR MAY PERTAIN, THE INSURANCE AFFORDED BY THE POLICIES DESCRIBED HEREIN IS SUBJECT TO ALL THE TERMS, EXCLUSIONS AND CONDITIONS OF SUCH POLICIES LIMITS SHOWN MAY HAVE BEEN REDUCED BY PAID CLAIMS

INSR LTR	TYPE OF INSURANCE	ADDL INSR	SUBR WVD	POLICY NUMBER	POLICY EFF (MM/DD/YYYY)	POLICY EXP (MM/DD/YYYY)	LIMITS	
A	GENERAL LIABILITY X COMMERCIAL GENERAL LIABILITY CLAIMS MADE X OCCUR X Contractors Pollution GEN'L AGGREGATE LIMIT APPLIES PER X POLICY PRO-JECT LOC	X	X	RENEWAL OF PKG1965110711	7/3/2011	6/3/2012	EACH OCCURRENCE DAMAGE TO RENTED PREMISES (Ea occurrence) MED EXP (Any one person) PERSONAL & ADV INJURY GENERAL AGGREGATE PRODUCTS COMP/OP AGG	$ 1,000,000 $ 50,000 $ 5,000 $ 1,000,000 $ 2,000,000 $ 2,000,000 $
B	AUTOMOBILE LIABILITY X ANY AUTO ALL OWNED AUTOS SCHEDULED AUTOS X HIRED AUTOS X NON OWNED AUTOS	X	X	BA3511908	6/3/2011	6/3/2012	COMBINED SINGLE LIMIT (Ea accident) BODILY INJURY (Per person) BODILY INJURY (Per accident) PROPERTY DAMAGE (Per accident) Uninsured motorist combined PIP Basic	$ 1,000,000 $ $ $ $ 1,000,000 $ 2,500
A	X UMBRELLA LIAB X OCCUR EXCESS LIAB CLAIMS MADE DEDUCTIBLE X RETENTION $ 10,000			RENEWAL OF XSG1965180711	7/3/2011	6/3/2012	EACH OCCURRENCE AGGREGATE	$ 10,000,000 $ 10,000,000 $ $
C	WORKERS COMPENSATION AND EMPLOYERS' LIABILITY ANY PROPRIETOR/PARTNER/EXECUTIVE OFFICER/MEMBER EXCLUDED? (Mandatory in NH) Y/N N If yes, describe under DESCRIPTION OF OPERATIONS below	N/A	X	TSF0001212843	6/3/2011	6/3/2012	X WC STATU-TORY LIMITS OTH-ER E L EACH ACCIDENT E L DISEASE EA EMPLOYEE E L DISEASE POLICY LIMIT	 $ 1,000,000 $ 1,000,000 $ 1,000,000
D	Installation Floater			IM8772978	6/3/2011	6/3/2012	job site transit	$500,000 $250,000

DESCRIPTION OF OPERATIONS / LOCATIONS / VEHICLES (Attach ACORD 101, Additional Remarks Schedule if more space is required)
Blanket Additional Insured is provided on the General Liability and Auto Liability policies if a requirement of a written contract Blanket Waiver of Subrogation is provided on the General Liability, Auto Liability, and Workers Compensation if a requirement of a written contract All subject to policy terms and conditions.

CERTIFICATE HOLDER
409)770-5557

Galveston County
722 Moody
Galveston, TX 77550

CANCELLATION
SHOULD ANY OF THE ABOVE DESCRIBED POLICIES BE CANCELLED BEFORE THE EXPIRATION DATE THEREOF, NOTICE WILL BE DELIVERED IN ACCORDANCE WITH THE POLICY PROVISIONS

AUTHORIZED REPRESENTATIVE
H Smyrl, CPCU, CIC/JU Heather Smyrl

© 1988-2009 ACORD CORPORATION All rights reserved
The ACORD name and logo are registered marks of ACORD

ADDENDUM NO 1
FOR
COUNTY OF GALVESTON

SANTA FE HIGH SCHOOL GENERATOR

LJA PROJECT NO 0384-9003E

October 6, 2011

Addenda – Change in Invitation to Bid

The bid Opening is changed from Tuesday, October 11th to Tuesday October 18 2011 The time remains the same 2 00 P M in the Purchasing Agent s office located in the Galveston County Courthouse 722 Moody Avenue (21st Street), Fifth Floor, Galveston, Texas 77550

END OF ADDENDUM NO 1

THE COUNTY OF GALVESTON

RUFUS G. CROWDER, CPPB
PURCHASING AGENT

GWEN MCLAREN, CPPB
ASST. PURCHASING AGENT

COUNTY COURTHOUSE
722 Moody (21st Street)
Fifth (5th) Floor
GALVESTON, TEXAS 77550
(409) 770-5371

October 11, 2011

RE: ADDENDUM #2
Bid #B111056 – CDBG Round 1 Santa Fe High School Generator
LJA Project No. 0384-9003E

To All Prospective Bidders

The following information is being provided to aid in preparation of your bid submittal(s).

As a reminder, all questions regarding this bid must be addressed to Rufus G. Crowder, CPPB, Purchasing Agent via e-mail at rufus.crowder@co.galveston.tx.us or contact the Purchasing Department at (409) 770-5371.

Please excuse us for any inconvenience that this may have caused.

Sincerely,

Gwen McLaren, CPPB

Gwen McLaren, CPPB
Assistant Purchasing Agent
Galveston County

ADDENDUM NO 2
FOR
COUNTY OF GALVESTON
TO
SANTA FE HIGH SCHOOL GENERATOR

LJA PROJECT NO E0384-9003E

October 11 2011

GREGG B HAAN
90159
LICENSED
PROFESSIONAL ENGINEER
10/11/11

Addenda – Changes in specifications

1 Bid Proposal – Replace existing Bid Proposal with Addendum 2 Bid Proposal (attached)

Addenda – Changes in Plans

CLARIFICATION – Sheet E2 Note 2 Generator shall be purchased and installed by contractor

CLARIFICATION – Sheet ESP 1 0 Sheet - Scale noted on sheet is correct

CLARIFICATION – Sheet ESP 1 0 Note 2 Contractor is to include money to pay CenterPoint Energy's fee (see attached CenterPoint Energy Terms & Conditions Package)

Additional Questions

1 What is the dB rating of the sound attenuated enclosure?

Response Enclosure shall be a level 2 sound attenuated, weather protective enclosure – 70 dB(A) at 7 meters

2 What are the fuel tank sizes and number required?

Response Fuel Tanks shall be two (2) – ten thousand (10,000) gallons tanks

3 Is Kohler an acceptable manufacturer?

Response Yes, Kohler is an acceptable manufacture,

4 Drawings indicate a Supervault tank and specs call for Convault fuel tanks As long as the specified ~~UL 142~~ is met, will other manufacturers be acceptable?

Response Other Manufactures will be acceptable if the UL 2085 is met

5 Is more information regarding the Fuel Pumping System as called out on Sheet E2 going to be provided?

Response Yes, See Sheet E5

6 Is the Fuel Tank Riser Vent to be 2' inch galvanized pipe or Stainless?

Response Galvanized

END OF ADDENDUM NO 2

BID PROPOSAL

Date _____

Bid of _____
(Legal Name of Bidder – Company)

[ ] an individual proprietorship

[ ] a corporation organized and existing under the laws of _____

[ ] a partnership consisting of _____

_____

[ ] a joint venture

[ ] other _____

FOR

CONSTRUCTION OF THE
PERMANENT EMERGENCY GENERATOR
TO SERVE
SANTA FE HIGH SCHOOL

IN
GALVESTON COUNTY, TEXAS
LJA JOB NO 0384-9003E

TO:

SANTA FE HIGH SCHOOL GENERATOR
c/o LJA Engineering, Inc
East Houston Office
11821 East Freeway, Suite 400
Houston, Texas 77029

PROPOSAL BIDDING SHEET

CONSTRUCTION OF THE PERMANENT EMERGENCY GENERATOR TO SERVE SANTA FE HIGH SCHOOL

IN GALVESTON COUNTY, TEXAS LJA JOB NO. 0384-9003E

Gentlemen

Pursuant to the foregoing Invitation and Instructions to Bidders, the undersigned bidder hereby proposes to do all the work for the unit prices bid to furnish all necessary superintendence, labor machine, equipment, tools, materials insurance and miscellaneous items, to complete all work according to the bids, as provided in the construction plan and contract documents for the construction of the Permanent Emergency Generator to serve Santa Fe High School, and clean up the site to the satisfaction of the Owner/Engineer, and bind himself on acceptance of this proposal to execute a contract and bonds for completing said project within the time stated for the following prices, to wit

BASE BID ITEMS

ITEM NO	QTY	UNIT	ITEM DESCRIPTION AND TOTAL WRITTEN UNIT PRICE	UNIT PRICE	AMOUNT
1	1	LS	Site work Including Concrete Pad, Concrete Paving, Chain Link Fence with Gate, Fine Grading, bollards, and Seeding Complete in place for _____ dollars and _____ cents per unit		
2	1	LS	Standby Diesel Generator as Specified in the Plans and Specifications, Including Generator, Fuel Tanks, Sound Attenuating Enclosure Complete in place for _____ dollars and _____ cents per unit	$_____	$_____
3	1	LS	Electrical System Installation for Standby Diesel Generator, Including Generator Feeders, Automatic Transfer Switch, Centerpoint Energy T&C fee & Requirements, and All Other Appurtenances as Shown on Plans and as Described in Specifications for a Complete Operating System Complete in place for _____ dollars and _____ cents per unit	$_____	$_____

SUBTOTAL BASE BID ITEMS $_____

PROPOSAL BIDDING SHEET

CONSTRUCTION OF THE
PERMANENT EMERGENCY GENERATOR
TO SERVE
SANTA FE HIGH SCHOOL

IN
GALVESTON COUNTY, TEXAS
LJA JOB NO 0384-9003E

SUBTOTAL BASE BID ITEMS $_____

TOTAL AMOUNT BID $_____

It is understood that in the event the successful bidder fails to enter into the Contract and to furnish a Performance Bond and Payment Bond in the amount of 100 percent of the Contract and for all parts of the work, as specified in the Instructions to Bidders, the Bidder will forfeit the Cashier's Check OR Bid Bond, as provided in the Contract Documents

The undersigned proposes, if awarded the Contract, to begin work as stipulated in the written Notice to Proceed issued by the Engineer, and to substantially complete the work within 170 calendar days after the date the work commences and to complete the project within 180 calendar days after the date of work commences

This bid proposal shall be considered part of the contract

_____ (Signature)

_____ (Type Name)

_____ (Title)

_____ (Attest)

(Seal, If Bidder is a Corporation)

_____ (Company Name – Bidder)

_____ (Address)

_____ (City) (County) (Zip)

_____ (Phone No)

_____ (Fax No)

_____ (E-mail Address)

PROPOSAL BIDDING SHEET

CONSTRUCTION OF THE
PERMANENT EMERGENCY GENERATOR
TO SERVE
SANTA FE HIGH SCHOOL

IN
GALVESTON COUNTY, TEXAS
LJA JOB NO 0384-9003E

ACKNOWLEDGMENT OF RECEIPT OF ADDENDUM

ADDENDUM NO 1 _____ _____
Signature Date

ADDENDUM NO 2 _____ _____
Signature Date

ADDENDUM NO 3 _____ _____
Signature Date

ADDENDUM NO 4 _____ _____
Signature Date

ADDENDUM NO 5 _____ _____
Signature Date

ADDENDUM NO 6 _____ _____
Signature Date

CenterPoint Energy

June 20, 2011

Re Santa Fe I S D
Santa Fe High School
16000 State Highway 6
Santa Fe, Texas

Project #56646012

Please find attached the Terms and Conditions (T&C) package, applicable for the requested relocation of CenterPoint Energy's (CNP) existing pad mount service facilities, in conjunction with CNP providing increased underground service CNP plans to replace the existing 2000 kVA, 12 47 kV – 480Y/277 V, three phase, four wire, pad mounted transformer (PMT) with (1) 2500 kVA, 12 47 kV – 480Y/277 V, three phase, four wire, PMT

The estimate of cost to provide the relocated service facilities is $7,300 The cost is based on using CNP's standard installation equipment and does not include any overtime premiums Santa Fe I S D is responsible for installation of the transformer pad foundation and the required duct bank CNP will for break out the concrete from around the existing primary duct bank so that Santa Fe I S D can complete the required rerouting of the duct bank

CNP anticipates that an outage lasting approximately eight (8) hours will be required to transfer service to the new service location The total length of the outage will be contingent on Santa Fe I S D completing the rerouting of the duct bank to the new pad location If Santa Fe I S D requests that the outage be scheduled outside of CNP's normal work hours, a separate contractual agreement for the overtime labor expense will be required

The attached T&C package is effective for 365 days from the date of this memorandum, provided the field conditions existing as of this date and shown on the attached sketches remain the same After that time, the T&C package must be reviewed by the Major Underground Department (MUD) before a final commitment is made to the Santa Fe I.S D

Please review the attached T&C package, addendum and the Facilities Extension Agreement (FEA) Return signed originals of the T&C package cover sheet, of the addendum, and of the FEA In addition, please remit with these documents, the amount of $7,300 to the MUD's Major Underground Service Center office Note that the information contained in the T&C package is applicable for the life of the service

If any additional information is required, contact me at 713-207-4941

Thank you

Frank de Leon
CenterPoint Energy
Major Underground Department
Major Underground Service Center
3000 #A Harrisburg Blvd , Houston, Texas 77003

TERMS & CONDITIONS
UNDERGROUND ELECTRIC SERVICE

FOR

SANTA FE I.S.D.
SANTA FE HIGH SCHOOL
16000 STATE HWY. 6

Job #56646012

CenterPoint Energy (CNP)
Major Underground Department
P. O. Box 1700; Houston, Texas 77251-1700

REFERENCE SANTA FE I.S.D DRAWINGS:

Site Plan	Drawing #	E1 00	Dated	November 10, 2010
Utility Plan	Drawing #	E1 02	Date Received	April 4, 2011
Electrical One-Line	Drawing #.	N/A	Dated.	N/A
Load Analysis	Drawing #	N/A	Date Received	December 10, 2010

REFERENCE CENTERPOINT ENERGY SPECIFICATIONS:

Service Standards	March 24, 2011
Emergency Generators	007-231-82
Ready-Mix Concrete	007-221-01
Harmonic Distortion	007-231-83

Reviewed And Agreed To By _____ _____ _____
Signature Title Date

_____
Print Name

If this Terms & Conditions package is signed by anyone other than an official from SANTA FE I.S.D., it will not be considered valid. A valid signature will be considered an acceptance of all information contained within this Terms & Conditions package.

NO	DATE	ITEMS REVISED	BY	CH	APP

CenterPoint Energy Houston, Texas		
WRITTEN	FD	6-20-11
CHECKED	RJG	6-20-11
APPROVED	MEM	6-20-11
	SHEET 1 OF 12 SHEETS	

GENERAL

A These Terms and Conditions are for a modified underground service arrangement for Santa Fe I S D. Santa Fe I S D. and/or its contractors/representatives are herein referred to as the Customer

B CenterPoint Energy (CNP) to provide increased service by removing (1) 2000 kVA, 12 47 kV – 480Y/277 V, three phase, four wire, pad mounted transformer and installing (1) 2500 kVA, 12 47 kV – 480Y/277 V, three phase, four wire, pad mounted transformer at the requested transformer pad location

C. The CNP Major Underground Department (MUD) Engineering representative is Frank de Leon at 713-207-4941 or frank deleon@CenterPointEnergy com

The CNP Service Area Consultant is Ryan Dugan at 409-765-4012

D The Customer must comply with all CNP Service Standards, the National Electrical Code, the National Electrical Safety Code, all Occupational Safety and Health Administration (OSHA) requirements, the International Building Code and all local governing body codes

E During the removal and installation of CNP equipment, CNP will utilize the existing drives The Customer shall be solely responsible for any expenses associated with replacements or repairs to its facilities

F Requests for changes in the location or routing of CNP's existing service facilities must be submitted to CNP for approval and shall require preparation of a revised Terms and Conditions package

G Contact the MUD Engineering representative concerning Customer drawing revisions, information submission, questions, Terms and Conditions revision requests, etc

H Hard copy submittals may be mailed to the MUD Engineering representative (address – 3000A Harrisburg Blvd – Houston, Texas 77003) Electronic submittals may be e-mailed to the MUD Engineering representative The MUD Engineering representative will, "approve the submittals", "approve the submittals as noted" or "not approve the submittals" The Customer shall not install any item that requires CNP approval before receiving an official approval from the MUD CNP shall not be responsible for any installed item that has not received MUD approval

OUTAGE

CNP will require an outage of approximately eight (8) hours to transfer service to the new service location CNP will also replace the fused disconnects mounted at the terminal pole during the outage

Since the customer must also complete the rerouting of the ductbank to the new transformer pad location during the outage, the total length of the outage will be contingent on the completion of this work.

If the Customer requests that the outage be scheduled outside of CNP's normal work hours, a separate contractual agreement to cover CNP's overtime labor expenses will be required

SERVICE CONNECTION

A The Customer's maximum number of secondary cables that can be terminated in CNP's pad mount transformer is 14-750 MCM cables per phase The Customer shall advise the MUD Engineering representative, about any changes in the type, size and number of secondary conductors

B The initial available short circuit current is 56,523 amperes symmetrical, with an X/R ratio of 9 6.

C The ultimate available short circuit current is 57,828 amperes symmetrical, with an X/R ratio of 10.5

D Customers receiving electrical service from multiple sources will be required to install a permanent plaque or directory at each source in accordance with Article 230 2 of the National Electrical Code (NEC) These plaques are to signify that there is more than one electrical service to the building The Customer shall keep the power from each source separate throughout its entire electrical system This requirement is for the life of the service

E. A protective device coordination study for the Customer's service relative to CNP's protective devices may be requested by contacting the MUD Engineering representative

ACCESS

The Customer must provide a twelve foot (12') minimum width, fourteen foot (14') minimum vertical clearance, all weather, vehicle access road designed for HS-20-44 loading as recognized by the American Association of State Highway Officials (AASHO), for CNP personnel and equipment to the proposed pad mounted equipment location

The Customer must provide a thirty two foot (32') minimum vertical clearance over the equipment pad for CNP trucks and equipment

The Customer must maintain these requirements for the life of the service

CNP will utilize the Customer's parking and driveway facilities for the required access

EMERGENCY GENERATION AND SECONDARY LOAD TRANSFER

The customer's Emergency Generators and/or Secondary Load Transfer schemes shall meet the requirements of the CNP Specification on Customer Emergency Generation and Secondary Load Transfer, Specification 007-231-82, latest revision (attached) This requirement is for the life of the service

Generator exhaust must be located and/or directed away from CNP's equipment

HARMONIC DISTORTION

The Customer shall meet the requirements of the CNP Specification on Limitation of Harmonic Distortion on the Distribution System, Specification 007-231-83, latest revision (attached) This requirement is for the life of the service

METERING

The metering current and potential transformers (CT's and PT's) in the transformer will be installed in the secondary compartment of the transformer If a separately metered service is required, the Customer shall inform the MUD Engineering representative, so that alternate metering provisions can be arranged (separate CT and PT cans as required for each service)

FACILITIES INSTALLED BY THE CUSTOMER

All facilities are to be installed per the attached construction specifications The Customer or its contractor is to request a preconstruction meeting prior to starting the required underground construction by calling the number listed below.

All facilities shall be inspected by CNP after the conduit is installed, pads are formed, reinforcing rods installed, etc but prior to the pouring of concrete CNP recommends that the Customer complete the pouring of concrete on the day the facilities are inspected and approved The Customer will insure that all inspected and approved facilities remain in the approved condition until the concrete pour has been completed If there is damage to the inspected and approved facilities prior to the pouring of concrete, the facilities must be re-inspected by CNP before the Customer begins the pouring of concrete CNP reserves the right to require the Customer to break out any unapproved concrete pours at its expense

CNP will make a reasonable attempt to complete all inspection requests To insure that inspection requests can be fulfilled, they should be made twenty-four (24) hours in advance (Mon - Fri, between 9.00 a m and 3:00 p.m, holidays excluded) to the Major Underground Department at (713) 207-6229 Job #56646012 must be provided as the inspection identification number

DUCTBANK INSTALLATION

All proposed conduit for CNP's use is to be installed as indicated on CNP drawings Conduit turn ups into the equipment pad must have a minimum five foot (5') radius Any deviations from these requirements shall have written approval from the MUD Engineering representative prior to installation

During installation, the minimum depth for a conduit run must be referenced to the final grade

The Customer shall expose approximately 10 feet of the existing ductbank and shall shore the excavation in accordance with OSHA requirements. CNP will break out the concrete from around the conduits The Customer is to delay making the conduit connection until CNP removes the primary cables at the time of the outage (see Outage section, page 3)

The Customer must provide a jet line in each conduit. This jet line shall extend a minimum of seven feet (7') beyond the end of each conduit

For installations not utilizing a blanket easement document (see Easement Instrument section, page 6), the Customer shall also install a #14 American Wire Gage (AWG) or larger aluminum or copper 600 volt insulated conductor in one of the conduits The conductor must be electrically continuous This conductor is to facilitate surveying of the ductbank by CNP The ductbank cannot be surveyed until this conductor is installed as prescribed The Customer must take adequate measures to assure the conductor will be in place until all necessary surveying is completed After surveying of the ductbank is completed, but prior to CNP installing any primary cable, the Customer may retrieve its conductor at its option

DUCTBANK INSTALLATION (continued)

Conduit ends shall be plugged with a duct cap or other type capping device The use of rags to plug conduits is not acceptable If the conduit is installed in stages, the Customer must keep each section of conduit capped until the new section is installed If, prior to CNP using any conduit, the conduit is found to be blocked, the Customer will be responsible, at its expense, for removing the obstruction

CLEARANCES

Final approval for the location of the pad mount equipment and the other electrical CNP facilities that will be maintained is contingent upon proper clearance, as determined by CNP, from cooling towers, vents, buildings, structures, etc , and other underground utilities It is in the Customer's and CNP's best interest to have all service equipment in a contamination-free environment to avoid unscheduled outages and/or premature equipment failures Prior to construction, the Customer shall inform the MUD Engineering representative of any existing or future contamination or pollutants which may affect the equipment so that necessary clearances can be secured

The MUD Engineering representative shall be notified promptly if the Customer intends to install any obstructions such as walls, hedges, bushes, trees, etc , around the transformer and/or any associated equipment so that additional clearances and access can be secured Any proposed enclosure surrounding CNP's equipment must be louvered, and both a profile and a cross-sectional view of the proposed louvered enclosure shall be submitted for approval prior to installation

If, in the future, there is a problem with contamination of CNP's equipment, or proper clearances are not maintained, CNP reserves the right to relocate the equipment at the Customer's expense

CNP will not allow other facilities to pass beneath its equipment pads A one foot (1') minimum horizontal clearance shall be maintained between CNP pads and all other facilities

A one foot (1') minimum vertical clearance must be maintained between CNP ductbanks and all non-CNP facilities crossing the ductbank

A five foot (5') minimum horizontal clearance must be maintained between CNP ductbanks and other facilities running parallel to the ductbank CNP will not allow joint trenching between CNP ductbanks and other facilities

FINAL INSPECTION

Prior to scheduling the outage to transfer service to the new location all "Customer installed" facilities pertaining to this service arrangement must be completed and inspected A final on-site inspection must be made by a MUD representative to verify that all Customer installed facilities are in accordance with these Terms and Conditions The Customer (or its contractor) and the Service Area Consultant will be advised of any needed corrections and/or changes

EASEMENT INSTRUMENT

CNP will prepare an instrument for additional easements to be granted by the property owner after the installation of the transformer pad foundation for CNP's use has been completed according to these Terms and Conditions The service cannot be energized until CNP has accepted the signed instrument for all easements

The Customer also has the option of signing a blanket easement document Use of the blanket easement allows the service to be energized before the final signed instrument for all easements has been completed. The Customer may request use of the blanket easement document by contacting the MUD Engineering representative

CNP will need access to and from the proposed easements CNP will use these easements, as shown on the attached sketches, for the purposes of erecting, installing, operating, maintaining, replacing, inspecting and removing electrical distribution facilities The Customer shall keep these easements free and clear of any obstructions (trees, shrubs, other structures, etc) that may endanger or interfere with the efficiency, safety, and proper operation of the proposed facilities for the life of the service

INDEMNIFICATION AND LIABILITY LIMITS

See attached Addendum

CenterPoint Energy

DETAIL SKETCH

LAMBERT	SECTION	KEY MAP	FUNCTIONAL LOCATION	SCALE	CIRCUIT	ORDER NO
5942	82	734A	UDG-001616	N.T.S.	AL06	

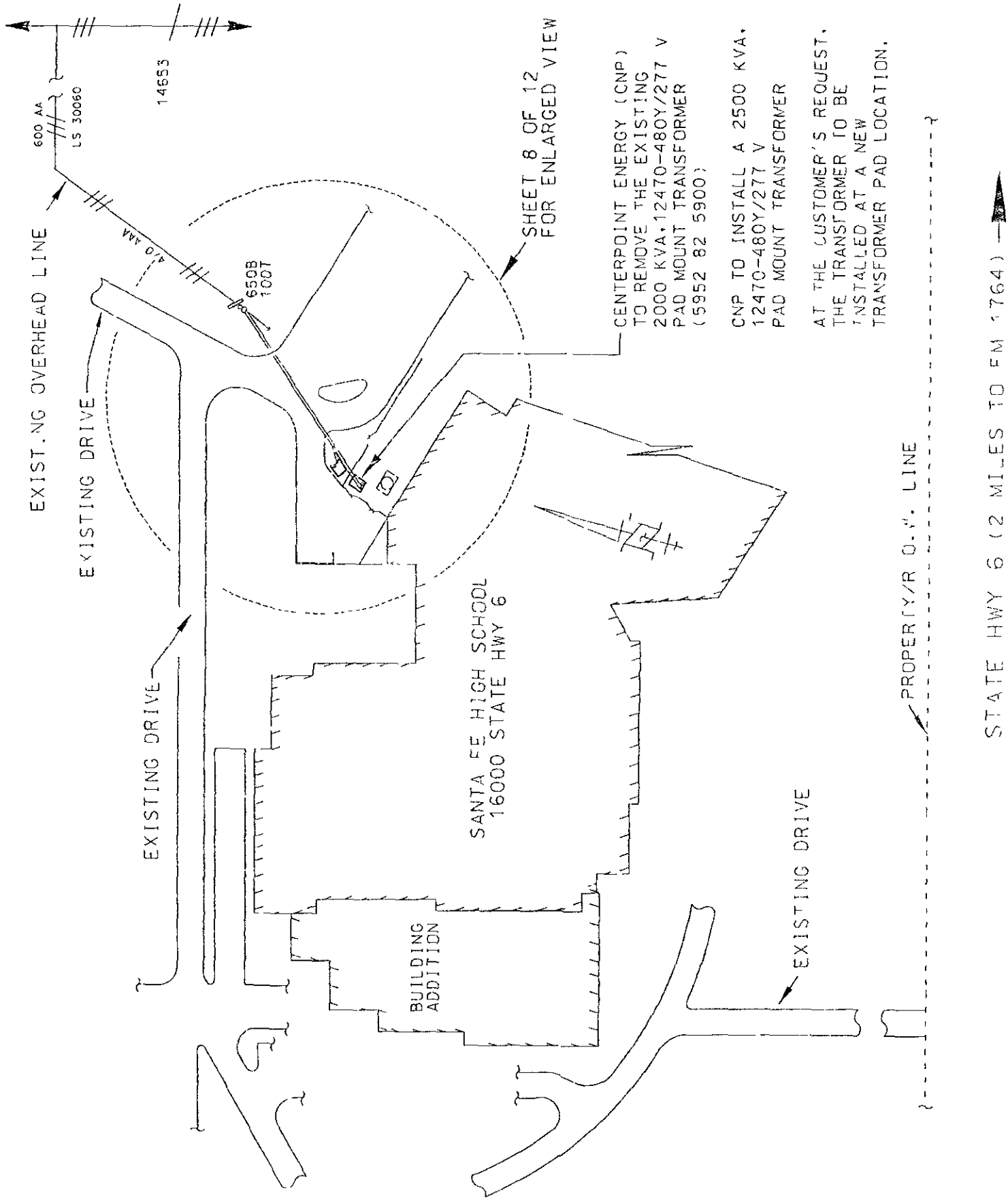

CenterPoint Energy

DETAIL SKETCH

LAMBERT	SECTION	KEY MAP	FUNCTIONAL LOCATION	SCALE	CIRCUIT	ORDER NO
5942	82	/34A	UDG-001616	N.T.S.	AL06	

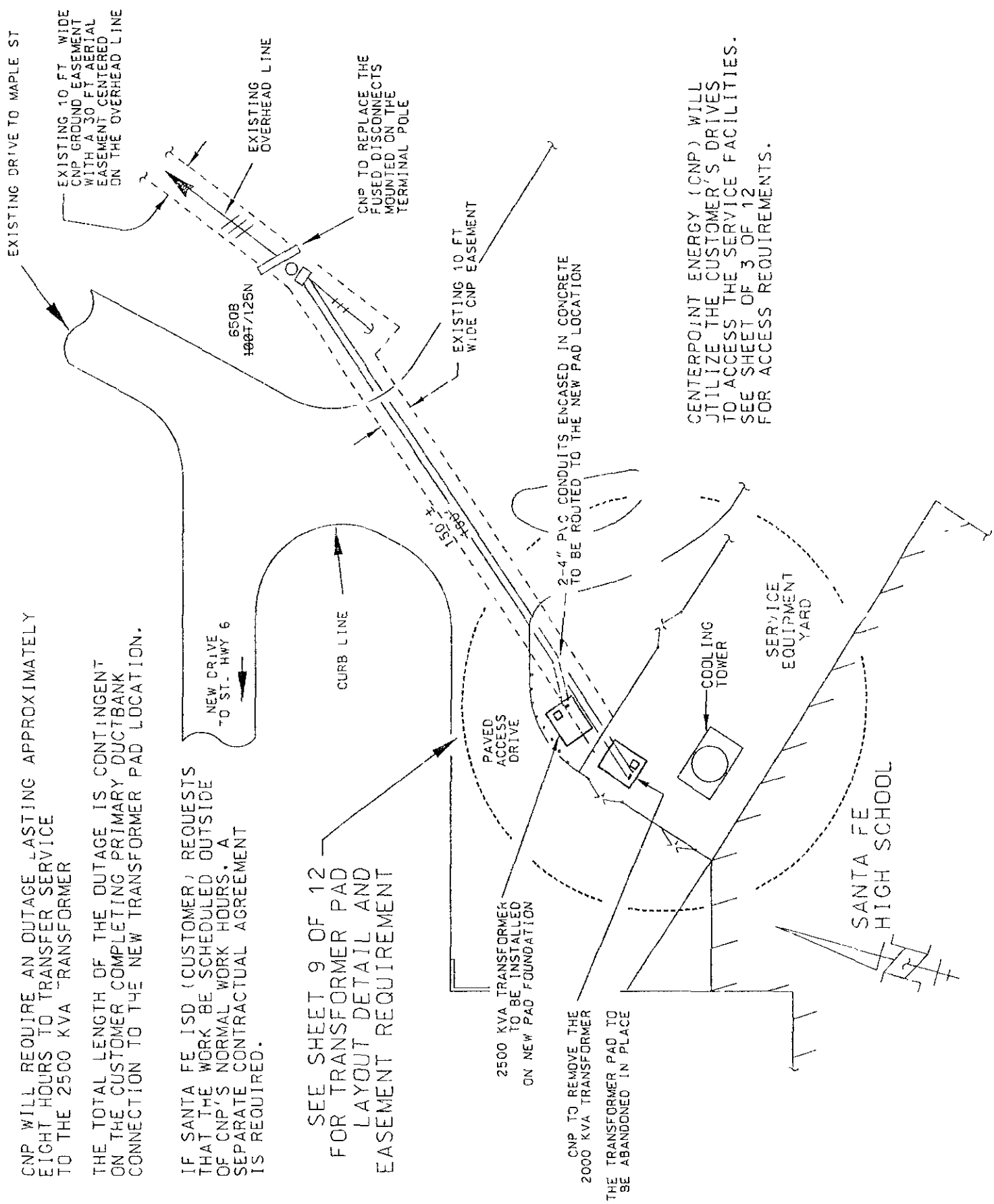

CenterPoint Energy

DETAIL SKETCH

LAMBERT	SECTION	KEY MAP	FUNCTIONAL LOCATION	SCALE	CIRCUIT	ORDER NO
5942	82	734A	UDG-001616	N.T.S.	AL06	

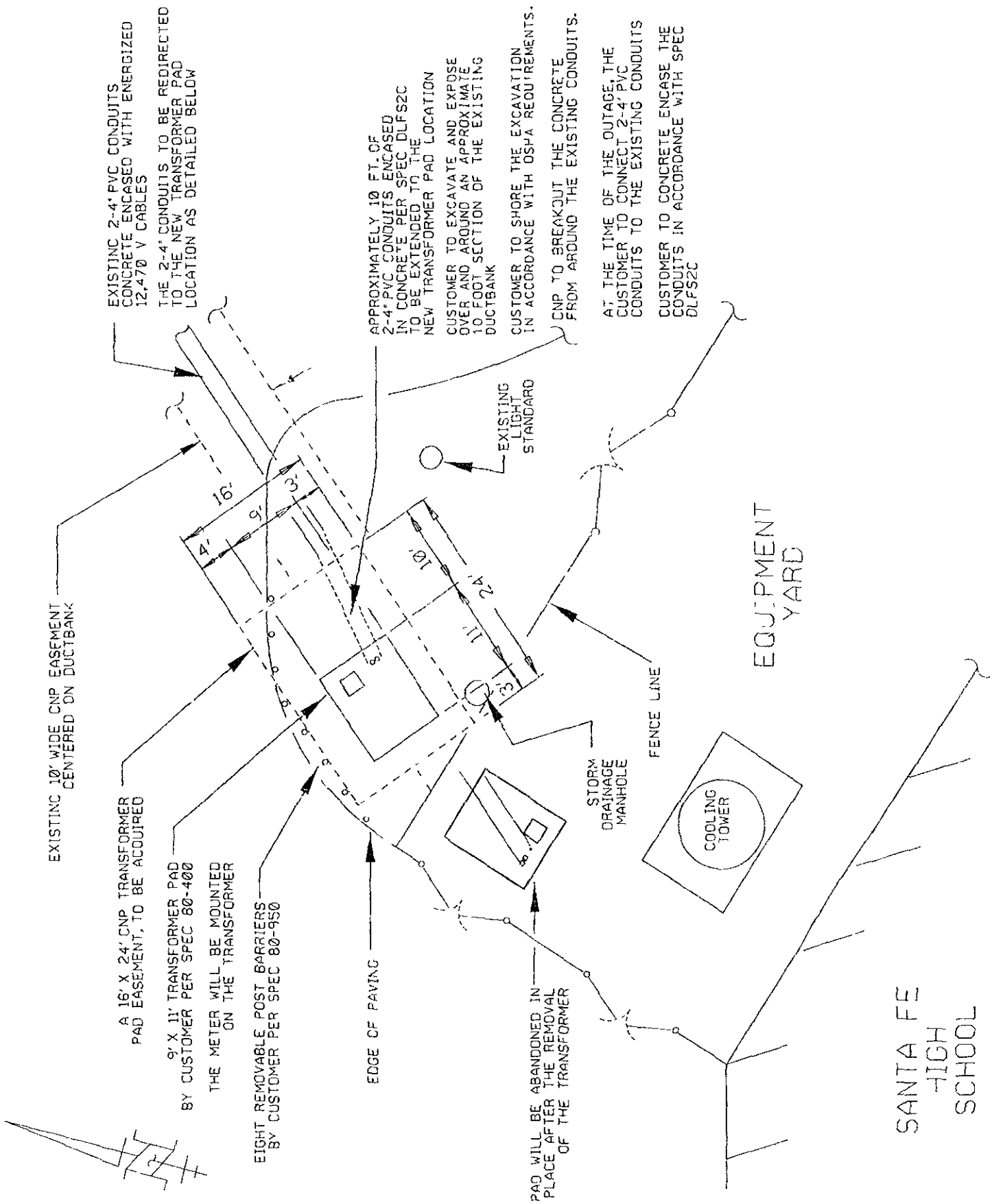

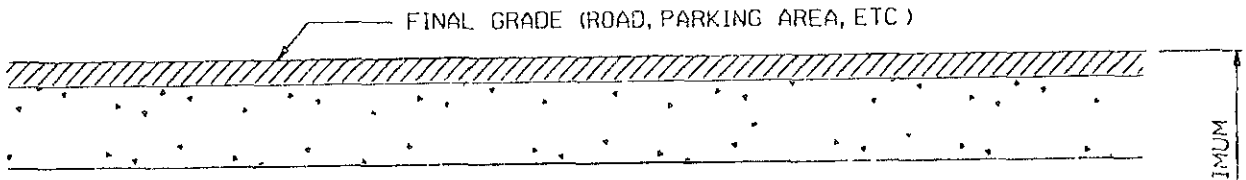

NOTE:
THE CUSTOMER AND/OR ITS CONTRACTOR IS TO REQUEST A PRECONSTRUCTION MEETING PRIOR TO STARTING CONSTRUCTION BY CALLING (713) 207-6229.

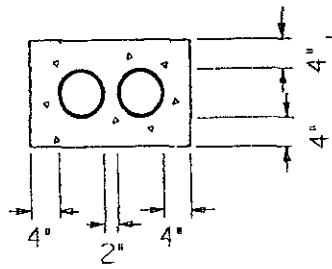

2 - 4"

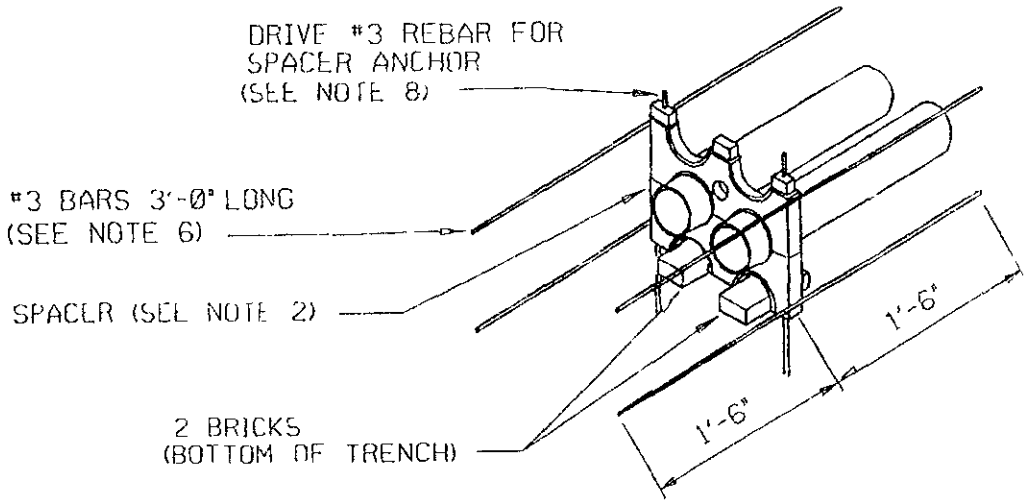

NOTES:
1. CONDUIT TO BE PVC, MINIMUM GRADE TYPE EB.
2. SPACERS SHOULD BE INSTALLED NOT MORE THAN 10'-0" APART
3. CONDUITS TERMINATING AT MANHOLES SHOULD BE SLOPED 0.5/ DOWN TOWARD MANHOLE.
4. ALL EXTERIOR CONCRETE COVER DIMENSIONS ARE MINIMUM
5. CONCRETE SHALL BE IN ACCORDANCE WITH CNP SPECIFICATION 007-221-01, LATEST REVISION.
6. PLACE REINFORCING BARS IN 4 CORNERS OF THE CONCRETE WHERE SPACERS ARE USED.
7. ON COLD JOINT CONCRETE POUR USE #5 REBAR (3'-0" IN LENGTH, EXPOSED 1'-6").
8. LENGTH OF REBAR FOR SPACER ANCHOR WILL VARY PER DUCT BANK HEIGHT.
9. CONDUITS ENDS SHALL BE PLUGGED WITH A DUCT CAP OR OTHER TYPE OF CAPPING DEVICE.
10. A TWELVE INCH (12") VERTICAL CLEARANCE MUST BE MAINTAINED BETWEEN CNP'S DUCTBANK AND ALL NON-CNP FACILITIES CROSSING THE DUCTBANK
11. A FIVE FOOT (5') HORIZONTAL CLEARANCE MUST BE MAINTAINED BETWEEN CNP'S DUCTBANK AND ALL NON-CNP FACILITIES RUNNING PARALLEL TO THE DUCTBANK (JOINT TRENCHING NOT PERMITTED).

THREE PHASE DUCTBANK
FEEDER

BASED ON DISTRIBUTION STANDARD DLFS2C

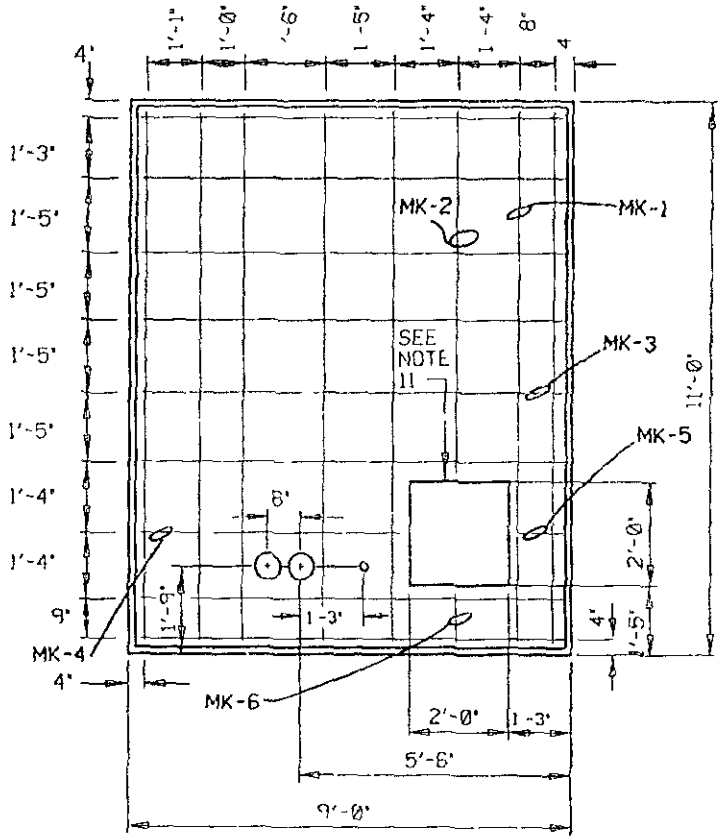

PLAN

REINFORCING SCHEDULE PER FOUNDATION				
MARK	QTY.	SIZE	LENGTH	REMARKS
MK-1	14	#7	10'-6"	STRAIGHT
MK-2	2	#7	7'-0"	STRAIGHT
MK-3	16	#7	8'-6"	STRAIGHT
MK-4	2	#7	5'-3"	STRAIGHT
MK 5	2	#7	0'-9"	STRAIGHT
MK-6	2	#7	1'-0"	STRAIGHT

MATERIAL ESTIMATE PER FOUNDATION	
DESCRIPTION	QUANTITY
REINFORCING STEEL #7	636 LBS
CONCRETE (5 SACK)	5 1/2 CU YDS
TYPE EB OR BETTER PVC CONDUIT, 90 DEG, 60" R	2
2" PVC CONDUIT	5 FT

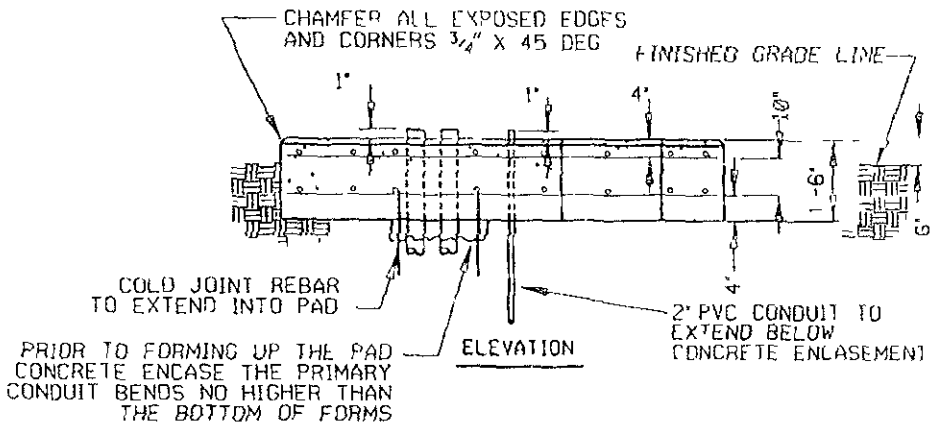

ELEVATION

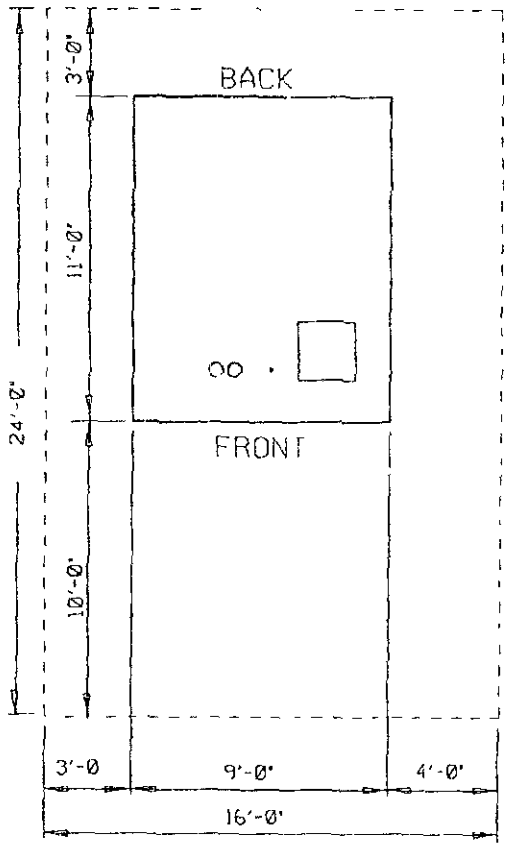

MINIMUM EASEMENT REQUIREMENTS

EQUIPMENT WEIGHT 43,000 LBS MAXIMUM

NOTES

1. CONCRETE SHALL BE IN ACCORDANCE WITH CNP SPECIFICATION 007-221-01, LATEST REVISION (MINIMUM COMPRESSION IN 28 DAYS, 3000 PSI).
2. REINFORCING STEEL SHALL BE INTERMEDIATE GRADE DEFORMED BARS IN ACCORDANCE WITH A.S.T.M. SPECIFICATION A-615, GRADE 60, OR BETTER. ALL SPLICES IN REINFORCING SHALL LAP A LENGTH EQUAL TO 24 BAR DIAMETERS
3. ALL DIMENSIONS ON REINFORCING ARE TO THE CENTER OF BARS
5. CONCRETE SHALL BE THOROUGHLY WORKED AROUND REINFORCING, ANY EMBEDDED FIXTURES AND INTO ALL CORNERS OF FORMS. IF REQUIRED, GROUT SHALL BE A MIXTURE OF 1 PART CEMENT TO 2 PARTS SAND WITH ENOUGH WATER TO PRODUCE A WORKABLE MIXTURE.
7. CONCRETE IS TO BE POURED ONLY WHEN THE ATMOSPHERIC TEMPERATURE IS A MINIMUM 40°F (5°C.) AND RISING. STRIP BACK ALL VEGETATION AND APPROXIMATELY 12" OF TOP SOIL. REMOVE ALL LOOSE CLODS AND STONES. BACKFILL AND THOROUGHLY COMPACT ALL CONDUIT TRENCHES AND HOLES BEFORE CONCRETE IS PLACED
9. REINFORCING SHALL HAVE A MINIMUM OF 2.5" CONCRETE COVER
10. SLOPE PAD 1" FRONT TO BACK. THE SQUARE OPENING IS FOR THE CUSTOMER'S SECONDARY CONDUITS
11. CNP WILL NOT ALLOW OTHER FACILITIES TO PASS BENEATH ITS EQUIPMENT PADS. A ONE FOOT MINIMUM HORIZONTAL CLEARANCE SHALL BE MAINTAINED BETWEEN CNP PADS AND ALL OTHER FACILITIES.
12. THE METER WILL BE MOUNTED ON THE TRANSFORMER.
13. THE SECONDARY OPENING IS TO BE BACKFILLED WITH SAND WITHIN 4 INCHES OF THE TOP OF THE PAD

500-5000 KVA PMT
FOUNDATION, 12KV & 35KV
BASED ON DISTRIBUTION STANDARD 80-400

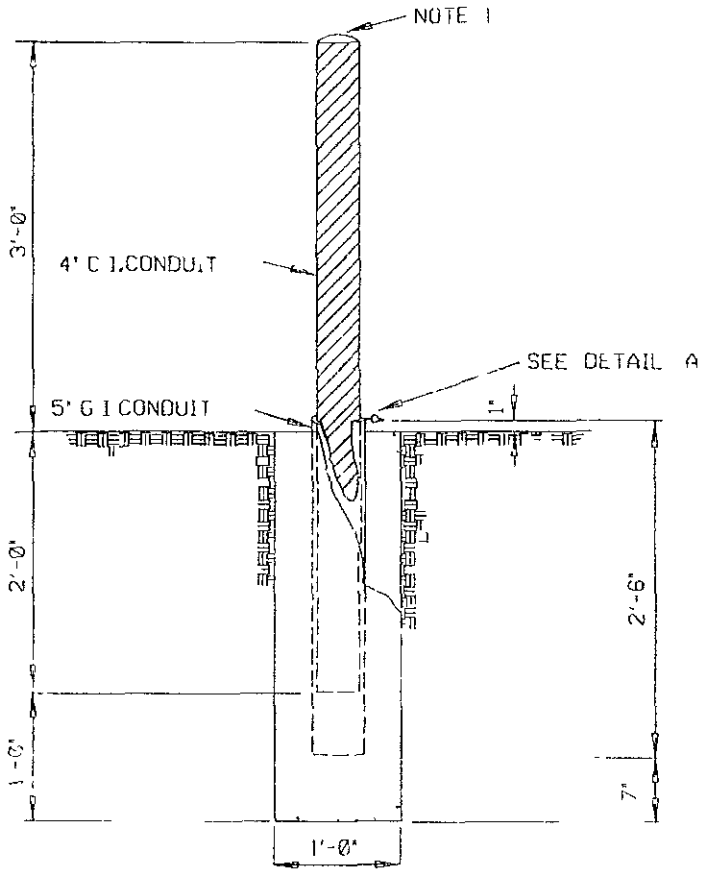

PROTECTIVE BARRIER
(REMOVABLE)

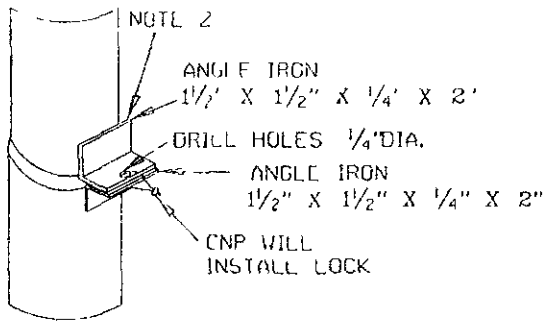

DETAIL "A"

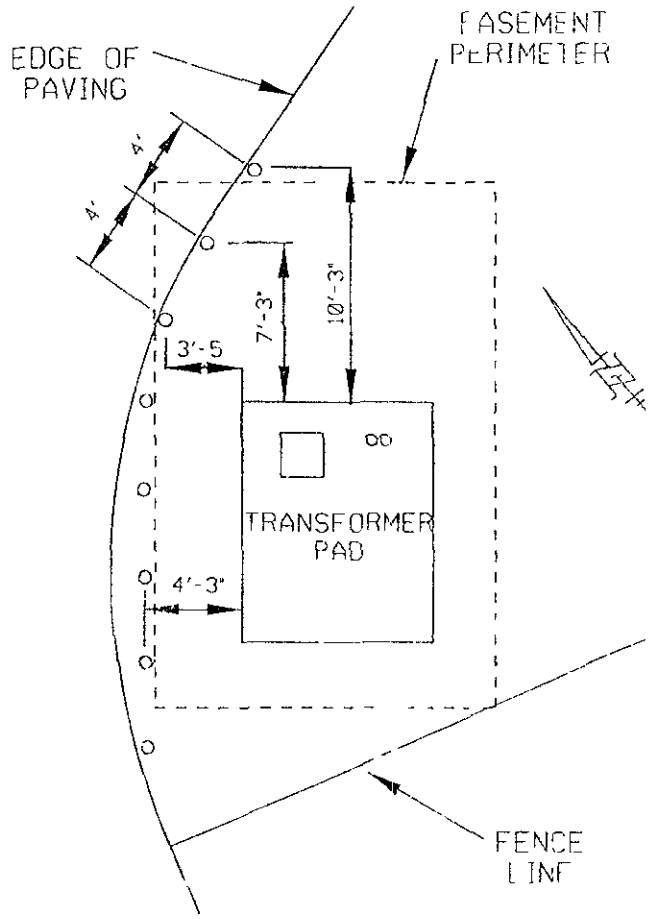

INSTALL EIGHT (8) REMOVABLE POST BARRIERS ON APPROXIMATELY 4 FT. CENTERS

NOTES:

1. 4" G.I. CONDUIT TO BE FILLED WITH CONCRETE
2. ANGLE TO BE WELDED TO G.I. CONDUIT ALL EXPOSED METAL TO BE PAINTED WITH GALVANOX PAINT
3. SEAL GAP BETWEEN CONDUITS WITH DUCT SEAL FOR WATER TIGHT FIT
4. USE 5" PLUG TO PREVENT CONCRETE FROM COMING UP 5" G.I. CONDUIT

PROTECTIVE BARRIER
(REMOVABLE)
BASED ON DISTRIBUTION STANDARD 80-950

ADDENDUM TO "*TERMS AND CONDITIONS TO UNDERGROUND ELECTRIC SERVICE*"

This Addendum is dated as of the Effective Date (as defined below) and is between CENTERPOINT HOUSTON ELECTRIC, LLC (the "Company") and SANTA FE I S.D. ("Customer"). The Company and Customer are referred to in this Addendum individually as a "Party" and collectively as the "Parties "

Customer is the owner and operator of Santa Fe High School, 16000 State Hwy. 6 ("Property"). ("Facilities") shall mean any facilities, equipment, cable, or other material referred to in the Agreement installed and owned by the customer or his contractor at 16000 State Hwy 6, Santa Fe, Texas.

Contemporaneously with the execution of this Addendum, Customer and the Company are entering into THE TERMS AND CONDITIONS TO UNDERGROUND ELECTRIC SERVICE (the "Agreement") under which underground electric service will be provided to the Facility "Effective Date" means the date that the Agreement is signed, as indicated by the date next to the customer signature on the cover sheet of the Agreement

Because of certain laws and regulations applicable to Customer, the Parties desire to set forth their understanding regarding those laws and regulations and the related allocation of certain risks and liabilities between them

The Parties therefore agree as follows.

1. Applicability This Addendum is being executed in connection with and will be deemed to be a part of the Agreement No provision of the Agreement stating that the Agreement contains the entire understanding of the Parties with respect to its subject matter or other provision in the Agreement of the type typically referred to as a "merger clause" will apply to this Addendum To the extent that the terms and provisions of this Addendum conflict with the terms and provisions of the Agreement, the terms and provisions of this Addendum control Notwithstanding the execution of this Addendum, the Agreement remains in full force and effect, except as otherwise provided in this Addendum

2 Customer as Governmental Entity.

(a) Customer represents and warrants that it is a governmental entity, and that as a governmental entity it is subject to constitutional and statutory limitations on its ability to be bound by certain terms and conditions of the Agreement, which may include terms and conditions relating to liens on government property; disclaimers and limitations of warranties; disclaimers and limitations of liability for damages; waivers, disclaimers, and limitations on legal rights, remedies, requirements, commitment of future funding, and processes, limitations of time in which to bring legal action, control of litigation or dispute resolution; indemnities, and confidentiality of information, and to the extent that any provisions of the Agreement, including this Addendum, would violate any such restrictions, the Customer will not be bound by such provisions. Any terms or provisions of this Addendum that are less restrictive than those in the Agreement with respect to Customer's obligations will be null and void and will have no force or

effect if the representation and warranty that Customer is a governmental entity is not true or to the extent that the more restrictive term in the Agreement would be enforceable against Customer under Applicable Laws (as defined below).

(b) Terms and conditions in the Agreement relating to limitations of the type described in Section 2(a) will only be binding on Customer to the extent they are valid and enforceable under all applicable laws, including all state and federal laws, rules and regulations, the constitutions of the United States and the State of Texas and the laws of the United States and the State of Texas ("Applicable Laws")

3. Maintenance. Except to the extent expressly set forth in a written agreement between the Parties, the Company will not be required to maintain equipment, cable, or other material that is owned by Customer. Customer acknowledges that it is Customer's sole responsibility to follow the proper administrative or internal procedures to cause its Facilities and any related equipment to be properly maintained Customer also acknowledges that Company reserves the right, in accordance with Company Tariff, to discontinue service if Customer has failed, or the Company has determined, in its sole discretion, that Customer has failed, to maintain the Property and facilities or any related equipment, cable or other material in a manner that causes or could cause a safety hazard to person or property

4 Installation Customer understands that all facilities, equipment, cable and other material referred to in the Agreement must comply with all specifications set forth in said Agreement and the Permanent Easement and/or Right to Pull before the Company installs any equipment or provides electrical service. During the installation of any equipment to be installed by the Company under the Agreement, the Company will use every effort to preserve Customer's landscaping, parking areas, or other facilities. However, any cost that has been quoted to Customer does not include any special replacements or repairs to these items The Company shall not be responsible for any expenses associated with replacements or repairs to Customer's property, and Customer hereby waives any claims for such expenses that it has or may have against the Company

5 THIRD PARTY INDEMNIFICATION

SANTA FE I S D. SHALL ENSURE (WHETHER THROUGH CONTRACT, CONTRACT AMENDMENT, OR OTHERWISE) THAT ITS CONTRACTORS, SUPPLIERS AND SUBCONTRACTORS (OF ANY TIER) AGREE TO PROTECT, DEFEND, INDEMNIFY AND HOLD CENTERPOINT ENERGY, ITS CORPORATE AFFILIATES AND THEIR RESPECTIVE OFFICERS, DIRECTORS, EMPLOYEES AND AGENTS, FREE AND HARMLESS FROM AND AGAINST ANY AND ALL CLAIMS, DEMANDS, CAUSES OF ACTION, SUITS OR OTHER LITIGATION (INCLUDING ALL COSTS THEREOF AND ATTORNEY'S FEES) OF EVERY KIND AND CHARACTER ARISING IN FAVOR OF SANTA FE I.S D OR ANY THIRD PARTY (INCLUDING, BUT NOT LIMITED TO, PERSONNEL FURNISHED BY CONTRACTOR OR ITS SUPPLIERS AND SUBCONTRACTORS OF ANY TIER) ON ACCOUNT OF BODILY INJURY, DEATH OR DAMAGE TO OR LOSS OF PROPERTY, IN ANY WAY OCCURRING, INCIDENT TO, ARISING OUT OF OR IN CONNECTION WITH THE WORK PERFORMED OR TO BE PERFORMED HEREUNDER OR OCCURRING, INCIDENT TO, ARISING OUT OF OR IN

CONNECTION WITH THE PRESENCE OF SANTA FE I.S.D. PERSONNEL, AGENTS, SUPPLIERS AND SUBCONTRACTORS (AND THEIR RESPECTIVE PERSONNEL) ON THE PREMISES, ALL REGARDLESS OF WHETHER SUCH INJURY, DEATH OR DAMAGE IS CAUSED BY THE JOINT, CONCURRENT, CONTRIBUTING OR COMPARATIVE NEGLIGENCE OR FAULT, BUT NOT THE SOLE NEGLIGENCE OR FAULT, OF CENTERPOINT ENERGY. ITS CORPORATE AFFILIATES, OR THEIR RESPECTIVE OFFICERS, DIRECTORS, EMPLOYEES OR AGENTS.

6 Further Assurances. If at any time after the date of this Addendum any further action is necessary or appropriate to carry out the purposes of this Addendum, Customer shall use all commercially reasonable efforts to take, or cause to be taken, that action.

7 Assignment Customer shall not assign any part of its rights or delegate any performance under this Addendum, voluntarily or involuntarily, whether by merger, consolidation, dissolution, operation of law, or any other manner, without the Company's prior written consent Any purported assignment of rights or delegation of performance in violation of this Section 6 is void and of no effect

8 Modification, Waiver No amendment of this Addendum will be effective unless it is in writing and signed by the Parties. No waiver of satisfaction of a condition or nonperformance of an obligation under this Addendum will be effective unless it is in writing and signed by the Party granting the waiver, and no such waiver will constitute a waiver of satisfaction of any other condition or nonperformance of any other obligation To be valid, any document signed by a Party in accordance with this Section 7 must be signed by an officer or other representative of that Party authorized to do so

In addition, nothing in this Addendum or the Agreement shall be construed as a waiver or relinquishment by the Company of any right that it has or may have hereafter to discontinue service for or on account of default in the performance of Customer's obligations under this Addendum or the Agreement, including payment of any bill owing or to become owing thereafter, or for any other reason or cause stated in the Company's Tariff.

[*The remainder of this page has been intentionally left blank.*]

The Parties are signing this Addendum as of the Effective Date.

COMPANY:

CENTERPOINT ENERGY HOUSTON ELECTRIC, LLC

By: _____
Name: Mark E. Mitchell
Title: Engineering Manager

CUSTOMER:

SANTA FE I.S.D.

By signing this Addendum, the person purporting to sign this Addendum on behalf of Customer is representing and warranting to the Company that the person has the legal authority to bind Customer and has been duly authorized by Customer to sign and deliver this Addendum to the Company

By _____
Name: _____
Title: _____

CenterPoint Energy Houston Electric, LLC
Applicable· Entire Service Area

CNP 8038

6.3 AGREEMENTS AND FORMS

6.3.1 FACILITIES EXTENSION AGREEMENT

This Facilities Extension Agreement is entered into by and between Santa Fe I S D _____, herein called "Retail Customer" and CenterPoint Energy Houston Electric, LLC, herein called "Company" (hereinafter referred to as Agreement) for the construction, extension, installation, modification, repair, upgrade, conversion, relocation, de-energization or removal of Company's Delivery System, including temporary facilities (hereinafter referred to as facilities extension or extension), as described herein

This Agreement covers the facilities extension to Retail Customer location at Santa Fe High School 16000 State Highway 6, Santa Fe, Texas

The Company agrees to accept payment of seven thousand three hundred (7,300) ---------- --- Dollars to be paid by the Retail Customer, as a Non-Refundable Construction Payment in connection with the Retail Customer request to extend Company facilities to the above described location as follows· The relocation of the existing pad mounted service facilities in accordance with Terms and Conditions package Job# 56646012 A separate contractual agreement will be required for the overtime labor expense, if the Retail Customer requests that the work be scheduled outside of the Company's normal working hours

In consideration of said Non-Refundable Payment, to be paid to Company by Retail Customer prior to commencement of construction, Company agrees to install and operate lines and equipment necessary to distribute electric service to the identified location under the following General Conditions.

- Company shall at all times have title to and complete ownership and control over facilities installed by Company.
- Retail Customer must make satisfactory payment arrangements (if payment is required to extend Company facilities) and sign and return this Agreement before Company can proceed with the requested extension.
- Extension of service facilities is contingent on acquisition of all necessary easements and rights of way

CenterPoint Energy Houston Electric, LLC
Applicable: Entire Service Area

CNP 8038

Nothing herein contained within this Agreement shall be construed as a waiver or relinquishment by Company of any right that it has or may hereafter have to discontinue service for or on account of default in the payment of any bill owing or to become owing thereafter for any other reason or cause stated in Company's Tariff.

This Agreement shall not be binding upon Company unless and until it is signed by an authorized representative of the Company

CenterPoint Energy Houston Electric, LLC

By Frank de León

Frank de Leon
(name printed or typed)

Title Sr Engineering Specialist

Date 06-20-2011

_____
Retail Customer

By _____

_____
(name printed or typed)

Title _____

Date _____

SPECIFICATION
FOR

Customer Emergency Generation and Secondary Load Transfer

CENTERPOINT ENERGY
ELECTRIC DISTRIBUTION ENGINEERING
P.O. BOX 1700 HOUSTON, TEXAS 77251

REFERENCE DRAWINGS·

REFERENCE SPECIFICATIONS·

National Electrical Code
CNP Specification 007-231-76
PUCT Substantive Rule 25.212
IEEE Standard 519-1992 (or latest revision)

CenterPoint Energy

						WRITTEN		R.W. Comfort		
						CHECKED				
						APPROVED	11-16-88	L G Pond		
1	7-11-07	Complete Revision	SLJ	WSC	RKM / LSN		SHEET 1 of 14 SHEETS			
NO	DATE	ITEMS REVISED	BY	CH	APP			007	231	82

CONTENTS

Article No.	Title	Page No
1.0	SCOPE	3
2.0	POLICY ON EMERGENCY GENERATION	3
3.0	POLICY ON SECONDARY LOAD TRANSFER	4
4.0	APPROVAL	5
	FIGURES	7-14

1.0 SCOPE

1.1 Hereafter, CenterPoint Energy will be designated as "CNP" and the Contractor, Customer, or Facility Owner will be designated as "Customer".

1.2 This specification covers the minimum requirements for the operation of customer owned emergency generation, and the operating procedures for secondary load transfer on the customer's distribution system. The requirements in this specification are in addition to those stated in the National Electrical Code (NEC) and all other applicable governing authorities.

2.0 POLICY ON EMERGENCY GENERATION

2.1 Customer owned emergency generation must be connected to the customer's load through either an open-transition type transfer switch or a key interlocked two breaker/switch arrangement.

2.2 The open-transition type transfer switch or interlocked two breaker/switch arrangement must be designed to prevent the electrical and/or physical connection between the CNP distribution system and the customer generator bus. See Figures 1, 2, 3 and 4 on sheets 7, 8, 9 and 10 for the acceptable connections of the emergency generator to the customer's bus.

2.3 Exceptions to the above requirements (i.e. operating an emergency generator in parallel with the CNP system through the use of a closed transition transfer switch) will be granted under the following conditions.

2.3 1 Customers utilizing a closed transition transfer switch with their emergency generator must install protective devices in accordance with Public Utility Commission of Texas (PUCT) Substantive Rule 25.212 and specified in the CNP Specification for Customer Generation on the Distribution System (007-231-76). These protective devices must be installed at the interconnection point between CNP and the customer

2.3.2 The level of voltage and current distortion produced by the customer's generator must be in accordance with IEEE Standard 519-1992 (or latest revision)

2 4 Customers served from an existing CNP secondary network system will not be allowed to operate their emergency generators in parallel with CNP.

2.5 Generator(s) and its exhaust must be located where it will not interfere with CNP personnel or equipment. The location of the generator must be approved by CNP prior to installation.

2.6 Customers may not install or use any transfer switch on the high side (CNP side) of the meter or any transfer switch between the meter and the meter socket jaws. Customer owned standby generators must be located on the load side (customer side) of the meter, behind the main breaker (switch).

3.0 POLICY ON SECONDARY LOAD TRANSFER

3.1 The following policy applies to customers whose split load is served from two feeds on the CNP distribution system. These feeds may or may not originate from electrically separate circuits.

3.2 Customers should design their distribution system in such a manner that the distribution buses served from each feed shall always be electrically isolated from each other. See Figure 5 on sheet 11 for illustration

3.3 (A) Customers served from two CNP feeds where CNP provides manual transfer service may be allowed to transfer pre-approved loads (in accordance with Section 3.6 below) from one CNP feed to the other in the event of a circuit outage (B) Customers served from two or three CNP feeds where CNP provides automatic transfer service may be allowed to transfer pre-approved loads (in accordance with Section 3.6 below) in the event of a secondary outage on the CNP service to the affected customer

3.4 The secondary load transfer for either Sections 3.3(A) or 3.3(B) shall be done manually Automatic load transfer by the customer will not be permitted without CNP Engineering approval. Prior to the transfer of load, the customer must manually shed pre-approved loads on the receiving feed. The magnitude of load to be shed must be equal to or greater than the amount of load to be transferred, so that the normal load level of the receiving feed is never exceeded. These limits will be provided to the customer as a condition for electric service. This condition applies to Section 3.3(A). Customers served from two or three circuit automatic transfer service are typically provided service from either a normal circuit with a second as the back up or from a split service arrangement Upon the loss of a circuit CNP equipment is relayed to automatically transfer to the non affected circuit(s). This CNP automatic transfer typically occurs within a few seconds, utilizing open transition rollover. Normalization occurs within an eighty second closed transition rollback In a CNP split load arrangement a fault between the customer's service and the low side of CNP transformers may occur. Under this condition automatic transfer does not occur, because the fault could either be due to CNP or the customer's equipment If the fault occurs on the customer's equipment, the customer will not be allowed to transfer loads If the fault occurred on CNP equipment, CNP may isolate the service and the customer may manually transfer pre-approved loads. The magnitude of loads to be transferred shall not overload CNP transformers This condition applies to Section 3.3(B)

3.5 Where system capacity is available, customers served from a CNP underground network system may be allowed to manually transfer (in accordance with Section 3 6 below) pre-approved loads Typical network services consist of multiple CNP transformers connected in parallel In network and spot network services that do not have a CNP tie breaker the customer can transfer loads as long as the rating of the customer's secondary bus or cables are not exceeded In services containing a CNP tie breaker, the customer may manually transfer loads from one of their services to another provided the rating of the tie breaker is not exceeded and/or a fault does not exist on the secondary side of either CNP equipment or the customer's service(s)

3.6 All load transfers shall be done utilizing open-transition transfer switches/breakers. See Figure 6 on sheet 12 for illustration.

3.7 If the customer utilizes a three breaker/switch arrangement to transfer critical load between their two buses, the breaker/switch schemes must use both keyed and hard wire auxiliary contacts to operate feeder and tie breakers/switches. Electromechanical, electronic and keyed control of these devices will require that the tie breaker/switch cannot close unless one of the feeder breakers/switches is opened. See Figure 7 on sheet 13.

3.8 Secondary Load Transfer Capability will only be offered in conjunction with separate contractual arrangements between CNP and the customer, and where provisions to assure adequate circuit capacity and compliance with this specification have been made

4.0 APPROVAL

4 1 The following items must be submitted to the CNP Manager of Distribution Engineering or designated representative for approval.

4.2 Emergency Generation

4.2 1 The customer must submit 2 copies of their detailed electrical system (drawings and schematics) showing their emergency generator, transformers, circuit breakers, transfer switches and key interlocked scheme. CNP Engineering personnel will approve only those portions of the drawing which apply to the operation and connection of the generator to the customer's load A copy of the transfer switch instruction book and descriptive literature must also be submitted for approval. In lieu of hard copies, compatible electronic file formats are acceptable for submission.

4 3 Secondary Load Transfer

4.3.1 The customer must submit a load transfer schedule detailing the exact amount of load to be shed on the receiving feed prior to load transfer and the exact amount of load to be transferred. The format of this load transfer schedule shall be in accordance with Figure 8 on sheet 14.

4.3 2 The customer must submit 2 copies of their detailed electrical system (drawings and schematics) showing all transfer switches. A copy of the transfer switch instruction book and descriptive literature must also be submitted for approval. In lieu of hard copies, compatible electronic file formats are acceptable for submission

4.3 3 Customers utilizing a three breaker/switch arrangement for load transfer must provide a detailed control wiring diagram of the breaker/switch operation. The wiring diagram must show the electromechanical and key interlocks used to prevent the closing of the tie breaker/switch before one of the feeder breakers/switches is opened. See Figure 7 on sheet 13 for illustration.

4.3 4 After receipt of the above, CNP Engineering personnel will review the documents for approval. The amount of load the customer proposes to transfer from one CNP feed to another will be approved by CNP personnel. In all cases CNP personnel will verify that existing CNP facilities (Transformer Capacity, Secondary Bus Work, etc.) can accommodate the Load Transfer. If approval is granted, an Operation Agreement will be prepared detailing the operating procedures to be followed by the customer while transferring load between CNP feeds The Operation Agreement will also specify the maximum load that the customer will be allowed to transfer. Final written approval will not given until the customer has reviewed and signed this Agreement, and one signed copy has been received by CNP personnel.

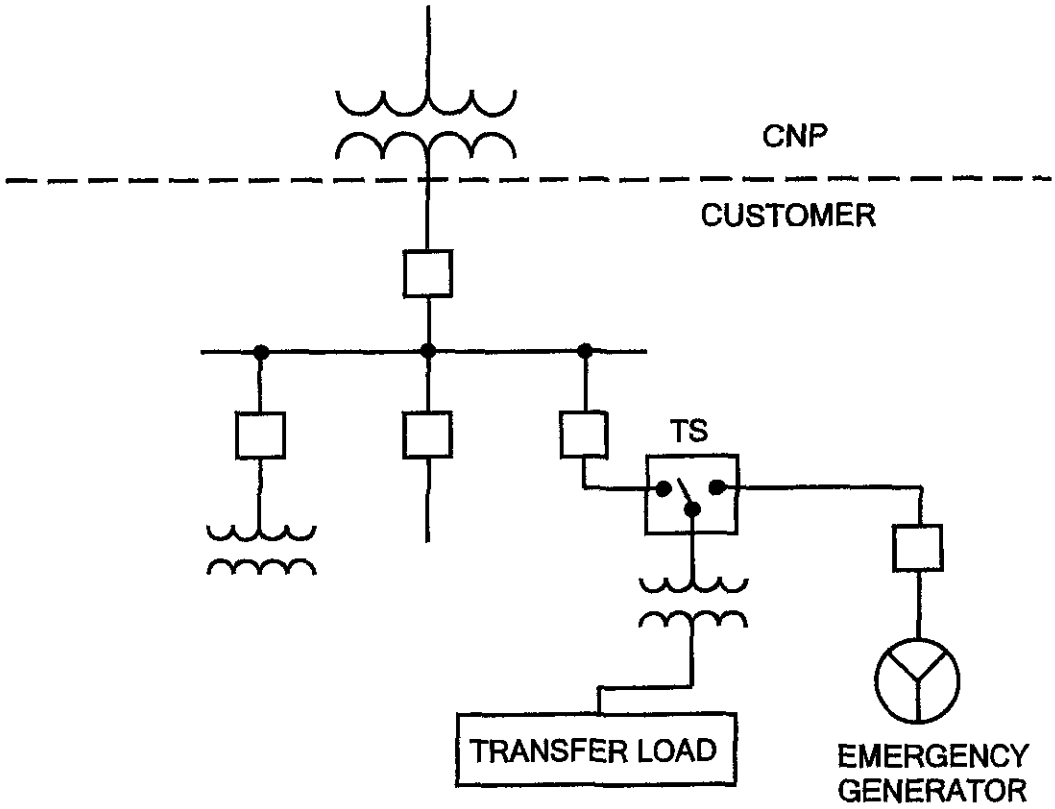

ACCEPTABLE CONNECTION OF EMERGENCY GENERATOR TO CUSTOMER DISTRIBUTION BUS.

TS - TRANSFER SWITCH

FIGURE 1

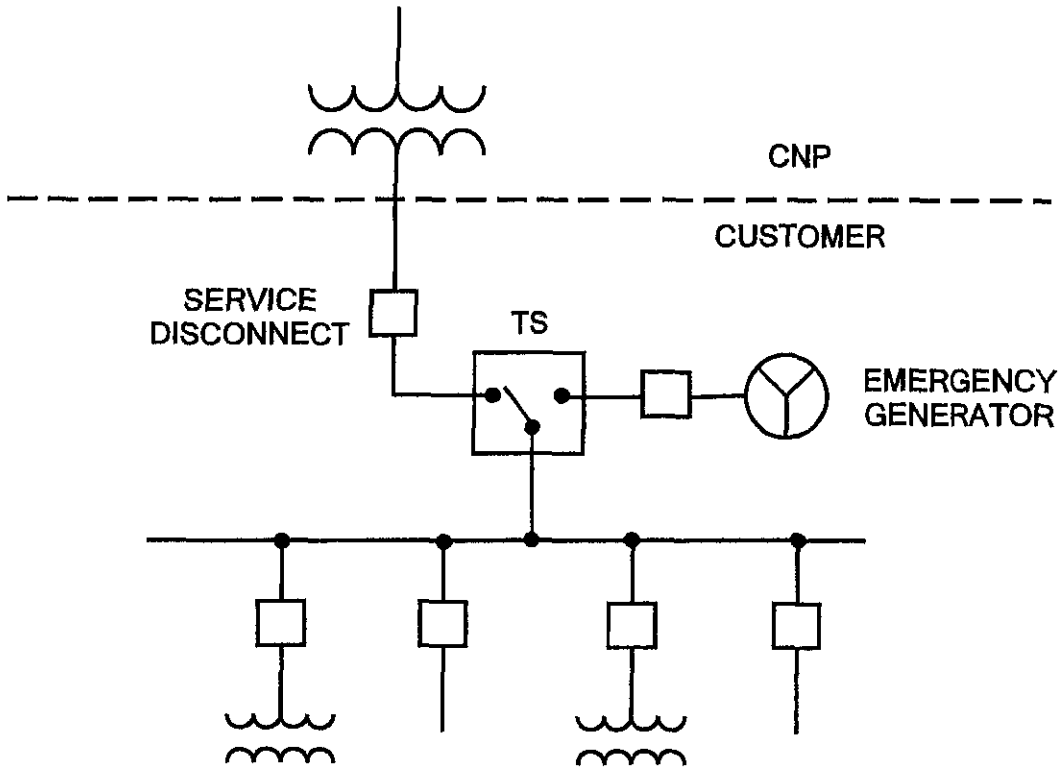

ACCEPTABLE CONNECTION OF EMERGENCY GENERATOR TO CUSTOMER DISTRIBUTION BUS.

TS - TRANSFER SWITCH

FIGURE 2

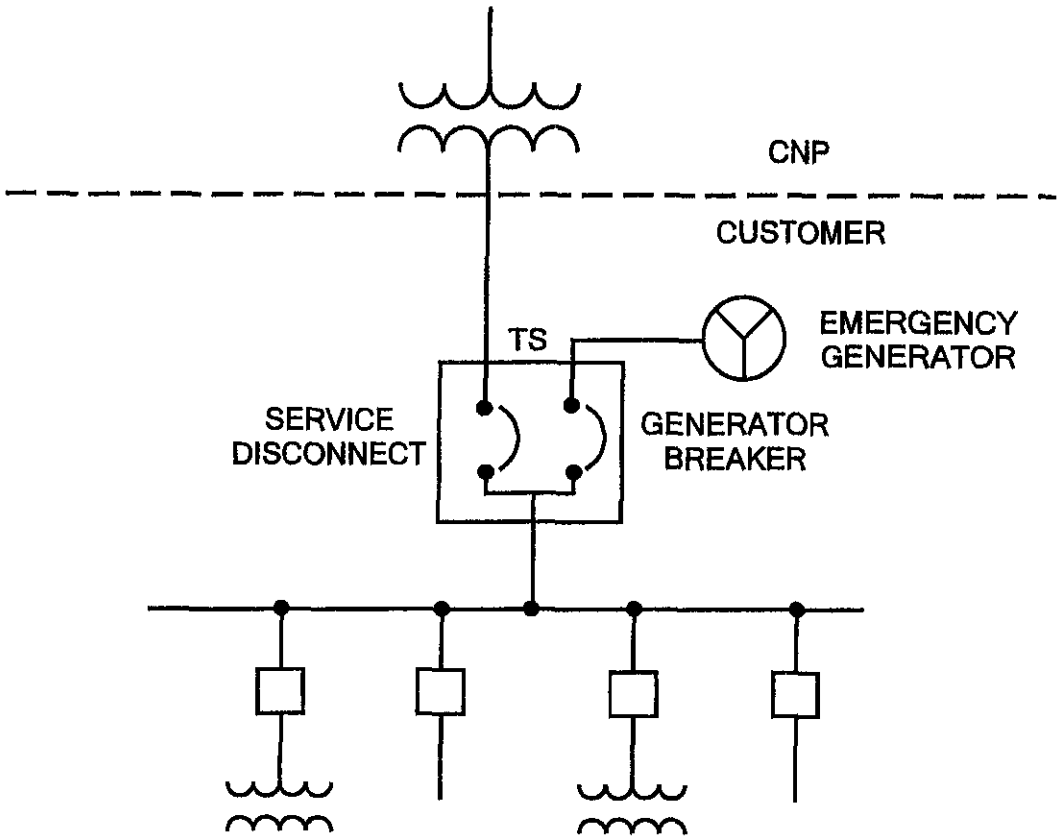

ACCEPTABLE CONNECTION OF EMERGENCY GENERATOR TO CUSTOMER DISTRIBUTION BUS UTILIZING TWO BREAKER TRANSFER SWITCH WITH ELECTRICAL AND MECHANICAL INTERLOCKS

TS - TRANSFER SWITCH

FIGURE 3

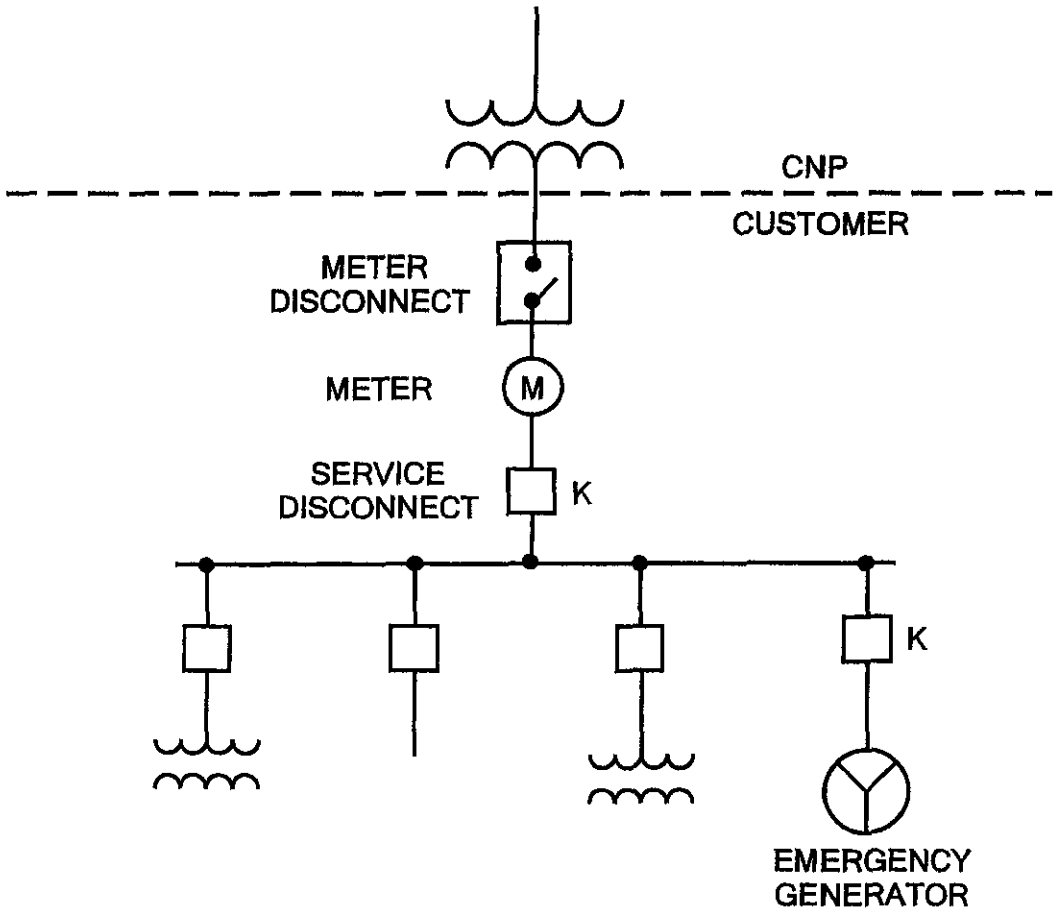

ACCEPTABLE CONNECTION OF EMERGENCY GENERATOR TO CUSTOMER DISTRIBUTION BUS UTILIZING KEY INTERLOCKED SERVICE DISCONNECT/BREAKER AND GENERATOR BREAKER/ ISOLATION SWITCH.

METER DISCONNECT IS ONLY REQUIRED FOR 480 V SELF-CONTAINED METER INSTALLATIONS AND IT CANNOT BE UTILIZED IN THE KEY INTERLOCK SCHEME.

K - KEY INTERLOCKS

FIGURE 4

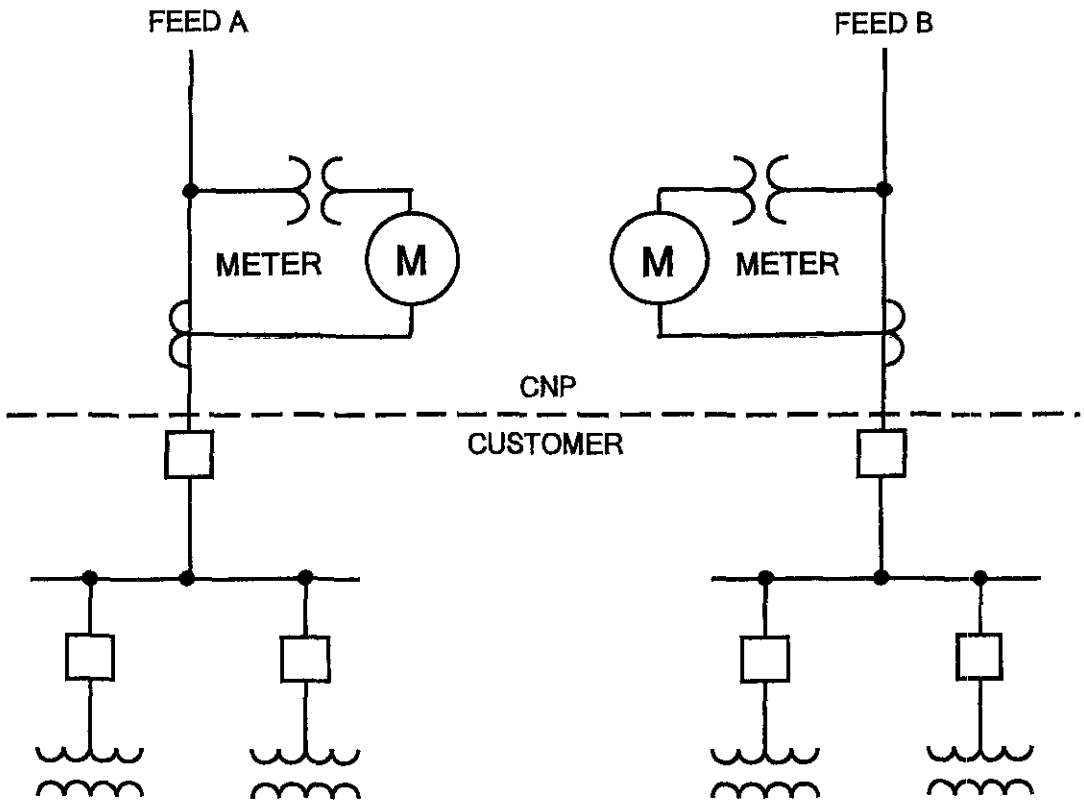

ACCEPTABLE ARRANGEMENT FOR CUSTOMERS
FED FROM TWO SEPERATE FEEDS.

FIGURE 5

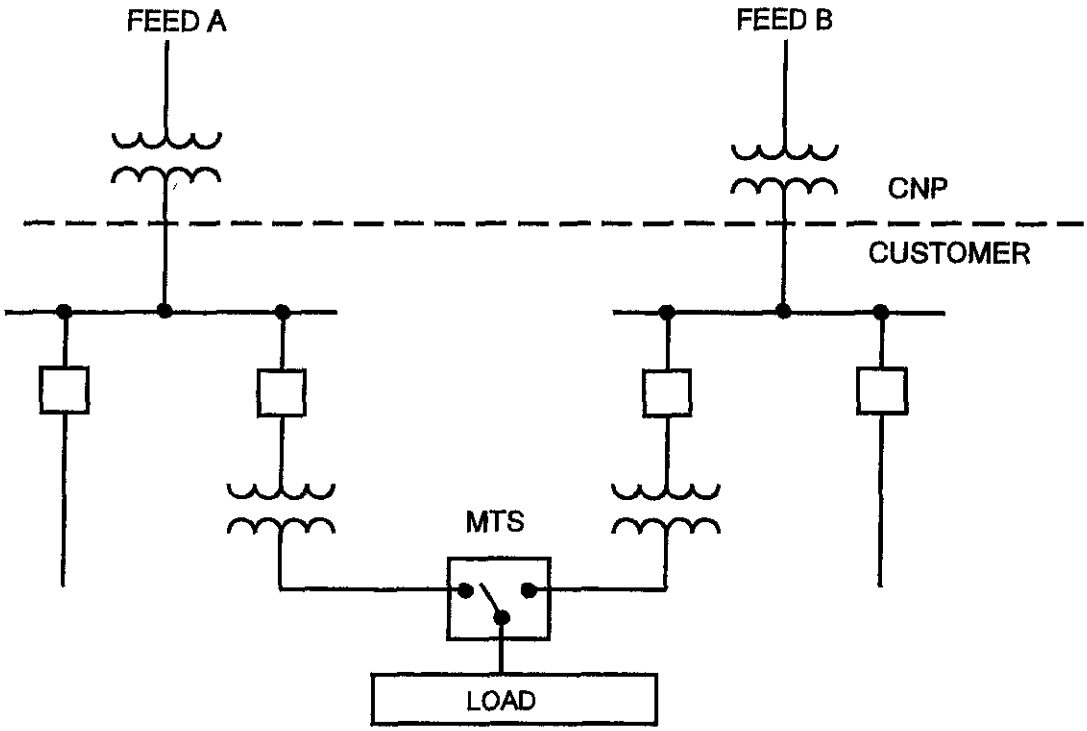

ACCEPTABLE SECONDARY LOAD TRANSFER SCHEME.

MTS - MANUAL TRANSFER SWITCH

FIGURE 6

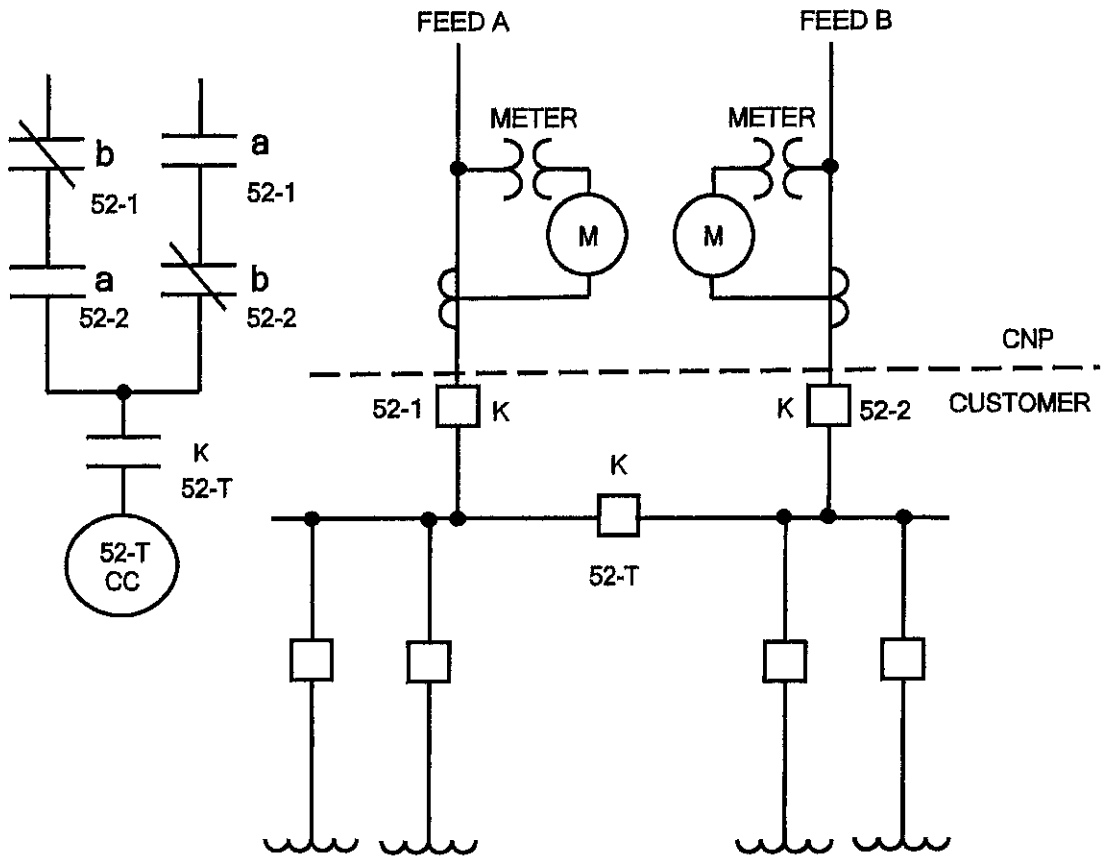

ACCEPTABLE CONTROL SCHEME FOR KEY INTERLOCKED SWITCHES / BREAKERS UTILIZED FOR SECONDARY LOAD TRANSFER.

52-T
CC - TIE BREAKER / SWITCH CLOSE COIL

52-1, 52-2 - CUSTOMER MAIN FEEDER BREAKERS (K - KEY INTERLOCKS)

52-T - CUSTOMER TIE BREAKER / SWITCH (K - KEY INTERLOCKS)

FIGURE 7

EMERGENCY LOAD TRANSFER SCHEDULE

CUSTOMER'S CIRCUIT NO.	CIRCUIT (LOAD) DESCRIPTION	CNP FEED "A" NORM.	CNP FEED "A" EMER.	CNP FEED "B" NORM.	CNP FEED "B" EMER.
1)	PUMP	1100	900	1000	1100
2)	AEROBIC DIGESTERS	1250	1500	1320	1200
3)	AIR COMPRESSORS	1620	1500	1400	1300
TOTAL CONNECTED LOAD (KVA)		3970	3900	3720	3600

NOTE: NORMAL LOAD LEVELS APPLY WHEN BOTH CNP FEEDS ARE ENERGIZED.

EMERGENCY LOAD LEVELS APPLY WHEN ONE OF THE CNP FEEDS IS DE-ENERGIZED AND THE CRITICAL LOAD IS TRANSFERRED TO THE REMAINING ENERGIZED FEED.

THE ABOVE TABLE IS FOR ILLUSTRATION ONLY.

FIGURE 8

SPECIFICATION
FOR

Limitation of Harmonic Distortion on the Distribution System

CENTERPOINT ENERGY
ELECTRIC DISTRIBUTION ENGINEERING
P.O. BOX 1700 HOUSTON, TEXAS 77251

REFERENCE DRAWINGS

REFERENCE SPECIFICATIONS

IEEE Std 519-1992 (or latest revision)

PUCT Substantive Rule 25 51

CenterPoint Energy

						WRITTEN	5-16-94	M W Narendorf		
						CHECKED	6-1-94	G H Nolin		
						APPROVED	6-1-94	J D Darnell		
2	1-11-08	Complete Revision	SLJ	WSC	RKM / LSN		SHEET 1 of 8 SHEETS			
NO	DATE	ITEMS REVISED	BY	CH	APP			007	231	83

CONTENTS

Article No	Title	Page No
1 0	SCOPE	3
2 0	GENERAL	3
3 0	HARMONIC SOURCES	4
4 0	CURRENT DISTORTION LIMITS	5
5 0	MODELING	6
6 0	MEASUREMENTS	7
7 0	MITIGATION DEVICES AND METHODS	7

1 0 SCOPE

1 1 This specification covers minimum requirements for any customer, connected to the CenterPoint Energy (CNP) distribution system, who has installed or plans to install equipment capable of distorting the 60 Hertz (Hz) voltage and current waveforms

1 2 Certain loads generate harmonic distortion due to the non-continuous manner in which these loads draw current. This harmonic distortion is injected onto the CNP distribution system High levels of harmonic current may cause the disruption or failure of customer equipment or CNP distribution system equipment It is the customer's responsibility to limit harmonic flow into the CNP distribution system

2 0 GENERAL

2 1 Hereafter, CenterPoint Energy will be designated as "CNP" and the Contractor, Customer, or Facility Owner will be designated as "Customer"

2.2 Equipment required to meet this specification shall be furnished by the customer unless otherwise noted

2 3 CNP reserves the right to refuse to energize any service which fails to meet this specification or any CNP approved project drawings

2 4 The customer shall indemnify and hold CNP harmless for all damages and injuries to CNP or others arising out of the customer's use, ownership, or operation of his facilities, and caused in whole or in part by the customer's negligence

2 5 Any deviations from this specification or CNP approved project drawings shall require the approval of the Manager of Distribution Engineering or his designated representative All items requiring CNP approval shall be submitted to the Manager of Distribution Engineering or his designated representative

2.6 Where there is a conflict between this specification and CNP approved project drawings, the drawings shall take precedence

2 7 All customer services and installations shall be in accordance with the latest revisions of IEEE Standard 519-1992 *IEEE Recommended Practices and Requirements for Harmonic Control in Electrical Power Systems* and the Public Utility Commission of Texas Substantive Rule 25.51 *Power Quality* (available at www puc state tx.us)

3 0 HARMONIC SOURCES

3 1 Harmonic distortion is due to non-linear loads, i.e , loads in which the current drawn is not proportionally related to the supply voltage There are three major classes of non-linear loads, listed in order of prominence electronic power converters, arcing devices, and ferromagnetic devices

3 1 1 Electronic power converters draw intermittent current The current distortion created is normally in the range of 20-30% of current rating for three phase equipment and 20-100% of current rating for single phase equipment

3 1 1 1 Adjustable speed and DC drives utilize rectifiers, inverters, converters and pulse width modulation Example uses of motor drives include chillers, pumps, and plastic extrusion drive applications

3 1 1 2 Most electronic equipment utilizes switched mode power supplies, these devices include computers and microprocessor controlled equipment, etc

3 1 2 Arcing devices clamp the voltage to limit current These devices include arc furnaces and welders, fluorescent, sodium and mercury vapor lighting (including high efficiency electronic ballast controlled lighting), etc Harmonic current content can be high and rapidly changing due to the rapid fluctuations in arcing loads.

3 1.3 The basic design of ferromagnetic devices involves a coil wound around an iron core, commonly used in motors and transformers The distortion created is in the range of about 1% of current rating

3 2 Capacitors may create parallel or series resonant conditions that divert or amplify the flow of harmonic currents, resulting in the disruption of equipment operation, mis-operation of protective devices, equipment failure and interference with utility operations

3 3 Other types of equipment may have undesirable harmonic characteristics Customers are encouraged to discuss their unique installation with qualified consultants

4 0 CURRENT DISTORTION LIMITS

4 1 Distorted current injected by the customer into CNP's Distribution System shall be limited to values, in percent of fundamental, listed in the table below The harmonic current levels allowed are based on the size of the load with respect to the size of the power system to which the load is connected

I_{SC}/I_L	HARMONIC ORDER, h (Odd Harmonics)					
	h<11	11≤h<17	17≤h<23	23≤h<35	35≤h	TDD
<20	4 0	2 0	1 5	0 6	0 3	5 0
20<50	7 0	3 5	2 5	1 0	0 5	8 0
50<100	10 0	4 5	4 0	1 5	0 7	12 0
100<1000	12.0	5 5	5 0	2 0	1 0	15 0
>1000	15 0	7 0	6 0	2 5	1 4	20 0

Reference Table 10 3 from IEEE Std 519-1992, page 78

4 1 1 I_{SC}/I_L Definition

I_{SC}/I_L is the ratio of the short circuit current available at the Point of Common Coupling (PCC) to the maximum fundamental demand load current I_{SC} is available from either the CNP documents providing new or added electrical service or from your CNP representative I_L is calculated as the average current of the maximum demand for the preceding 12 months In cases where this value is not available (new customers), an estimate of the maximum load current must be used based on the predicted load profiles

4 1.2 TDD Definition

Total Demand Distortion is the harmonic current distortion in % of maximum demand load current

4 1 3 Allowable Levels

As the size of the customer load decreases with respect to the size of the system, the larger the percentage of harmonic current the customer is allowed to inject into the utility system This protects other customers on the same feeder as well as the utility, which is required to furnish a certain quality of power to its customers

4 2 Even harmonics are limited to 25% of the odd harmonic limits listed under *Current Distortion Limits Table*, Section 4 1

4 3 All power generation equipment is limited to the values in the <20 category, regardless of actual I_{SC}/I_L

4 4 Current distortions that result in a direct current offset, e.g half wave converters, are not allowed

5 0 MODELING

5 1 CNP requires data pertaining to the customer's facilities and loads for possible modeling to determine whether a proposed customer's facility will cause harmonic limits to be exceeded Customer shall submit the following

1. One-line drawing of facilities showing ratings and connections of all electrical equipment
2. Location, connection, size and control methods of capacitors.
3. Conductor sizes and impedances
4. Location and type of non-linear loads
5. Overall plant load and portion which is non-linear
6. Locations, ratings, connections and impedance of transformers

5 2 Customer will be responsible for modeling his system to project harmonic levels and determine whether limits will be exceeded Modeling will be required to design or otherwise engineer his facilities to meet CNP's harmonic limits

5.3 CNP will supply on written request information regarding the local power system deemed necessary for customer's modeling efforts This information may include the following

1. Available fault duty and existing system impedance at customer's location
2. Ultimate available fault current
3. CNP transformer impedance and ratings
4. Possible voltage range variation

5.4 IEEE 519 allows for a Total Harmonic Distortion of 5% with no single harmonic exceeding 3% of nominal fundamental frequency voltage Filter modeling should include this allowable distortion Failure to include this allowable distortion may result in filter designs with overloaded components

5 5 CNP may require copies of customer's harmonic analysis to review prior to approving customer's proposed facilities

5.6 When required by CNP, the customer shall submit manufacturer's documentation and test data demonstrating the harmonic content of non-linear loads

6 0 MEASUREMENTS

6 1 CNP reserves the right to measure the amount of customer's harmonic current injection at any time

6 1 1 These measurements will be taken at the Point of Common Coupling, normally designated at the CNP meter

6 1.2 These measurements will normally be spot checks, however, at CNP's discretion, additional monitoring may be required

7 0 MITIGATION DEVICES AND METHODS

7 1 Customer shall be responsible for the design, installation. operation and maintenance of mitigation devices required to meet IEEE 519 harmonic limits

7.2 Mitigation devices may include current limiting reactors, passive traps and filters, active power line conditioners or other devices that minimize the flow of harmonic currents onto the distribution circuit

7 3 Customer shall submit mitigation device maintenance records to CNP upon request

7 4 The installation and testing of these devices shall be subject to the approval of CNP's Manager of Distribution Engineering or his designated representative

7 5 Customer shall design mitigation devices with the appropriate power rating to handle acceptable distortion levels in the utility supply voltage (refer to Section 5 4 of this specification)

7 6 CNP regularly reconfigures the distribution system in response to load changes and in resolution of outages Customer should design his mitigation device to be independent in its operation from characteristics of the CNP supply system

ADDENDUM NO 3

FOR

COUNTY OF GALVESTON

SANTA FE HIGH SCHOOL GENERATOR

LJA PROJECT NO 0384-9003E

Bid #B111056 – CDBG 1 Santa Fe High School Generator

October 13, 2011

Addenda – Change in Invitation to Bid

The bid Opening is changed from Tuesday, October 18th to Tuesday, October 25, 2011 The time remains the same 2 00 P M in the Purchasing Agent's office located in the Galveston County Courthouse, 722 Moody Avenue (21st Street), Fifth Floor, Galveston, Texas 77550

END OF ADDENDUM NO 3

THE COUNTY OF GALVESTON

RUFUS G CROWDER, CPPB
PURCHASING AGENT

GWEN MCLAREN, CPPB
ASST PURCHASING AGENT

COUNTY COURTHOUSE
722 Moody (21st Street)
Fifth (5th) Floor
GALVESTON, TEXAS 77550
(409) 770-5371

October 13, 2011

RE: ADDENDUM #3
Bid #B111056 – CDBG Round 1 Santa Fe High School Generator
LJA Project No. 0384-9003E

To All Prospective Bidders,

The following information is being provided to aid in preparation of your bid submittal(s).

OPENING DATE:
Bid #B111056 – CDBG Round 1 Santa Fe High School Generator - LJA Project No 0384-9003E originally scheduled to be opened on Tuesday, October 18, 2011 at 2:00 p.m. has been re-scheduled The new deadline for submitting bids is as follows.

Date: Tuesday, October 25, 2011
Time: 2:00 p.m.

Please send Bid submittals to
Galveston County Purchasing Agent
Attention: Rufus Crowder, CPPB
722 Moody (21st Street), Fifth (5th) Floor
Galveston, Texas 77550

If you have any further questions regarding this bid, please address them to Rufus G Crowder, CPPB, Purchasing Agent, via e-mail at rufus crowder@co galveston tx us, or contact the Purchasing Department at (409) 770-5371.

Please excuse us for any inconvenience that this may have caused

Sincerely,

Gwen McLaren, CPPB

Gwen McLaren, CPPB
Assistant Purchasing Agent
Galveston County

THE COUNTY OF GALVESTON

RUFUS G. CROWDER, CPPB
PURCHASING AGENT

GWEN MCLAREN, CPPB
ASST. PURCHASING AGENT

COUNTY COURTHOUSE
722 Moody (21st Street)
Fifth (5th) Floor
GALVESTON, TEXAS 77550
(409) 770-5371

October 19, 2011

RE: ADDENDUM #4
Bid #B111056 – CDBG Round 1 Santa Fe High School Generator
LJA Project No. 0384-9003E

To All Prospective Bidders

The following information is being provided to aid in preparation of your bid submittal(s)

As a reminder, all questions regarding this bid must be submitted in writing to

Rufus G. Crowder, CPPB,
Galveston County Purchasing Agent,
722 Moody, Fifth (5th) Floor
Galveston, Texas 77550
Fax: (409) 621-7987
E-mail: rufus.crowder@co.galveston.tx.us

Please excuse us for any inconvenience that this may have caused

Sincerely

Rufus G. Crowder, CPPB
Purchasing Agent
Galveston County

ADDENDUM NO 4
FOR
COUNTY OF GALVESTON
TO
SANTA FE HIGH SCHOOL GENERATOR

LJA PROJECT NO E0384-9003E

October 19, 2011

STATE OF TEXAS
GREGG B HAAN
90159
LICENSED
PROFESSIONAL ENGINEER

Addenda – Changes in Plans

CLARIFICATION

Cable tap box shown on drawing E-2 to have the following features

1 7000 amp rated 480v 3 phase 4 wires
2 Two NEMA 4X switchboard sections approx 42"x42" each section
3 7000 amp copper bus bars to connect incoming and outgoing tap box sections
4 Line section to be equipped with bottom fed lug arrangement suitable for landing
14 sets of 750 KCMIL copper conductors, neutral and ground wires
5 Load section to be equipped with bottom fed lug arrangement suitable for landing
18 sets of 500 KCMIL copper conductors, neutral and ground wires

The conductors between the transformer secondary terminals and the cable tap box are to be 14 sets of 750 KCMIL The conductors from the load side of the cable tap box are to be 18 sets 500 KCMIL

On E-2 the temporary connections now shown to be made between the transformer and the generator rollup switch will be made between the cable tap box and the rollup switch

Additional Questions

1 Will there be a need for a ground ring around the generator and fuel tanks connected to it?

Response No

2 How will the length of the fence be determined and the area it encloses? Sizes of the generator and fuel tanks will determine somewhat the size

Response Allow 4 – 6" minimum between generator and fence and between fuel tank and fence Allow 5' min between tanks and between the tank and generator

3 According to Sheet E-6, it indicates a fuel tank under the generator Is this correct?

Response Yes, it will not require a platform to access the generator

4 On the fuel system, is their a manufacturer who makes this fuel transfer panel?

Response ACS Manufacturing 903-462-2001
Park Environmental Equipment 713-937-7602

5 I'm not familiar with the term roll-up switch Are they the breakers with the Kirk-key?

Response Roll up switch is existing and it is a point of connection for the temporary power connection

6 On Sheet ESP-1 0, the feeders for the block heaters and mini-power zone indicate going to MCC The feeders do not continue on any other sheet for us to scale to MCC Please clarify

Response The feeders continue on Sheet E8 0

7 On Sheet ESP-1 0 the scale shown on drawings is 1-1/2" = 1'-0 This can not be correct, please provide accurate scale

Response The scale is 1/8" = 1'

8 Are we to fill up the two (2) 10,000 gallon diesel tanks with diesel fuel at the completion of the project?

Response Yes the tanks shall be filled

9 When we have to shut power to change over to the transformer, will the school allow an 8-hour shutdown on normal Centerpoint work hours? They normally work Monday – Friday, 8am to 5pm

Response Power shutdown will have to be coordinated with Santa Fe School District and Centerpoint Energy at the preconstruction conference

10 What is the capacity of the day tank under the generator?

Response The day tank shall be sized for 24 hours of operation but not increase the generator height by more than 15-inches

11 It seems like the generator and fuel tanks are being placed on the driveway Being a 2000kw generator and two 10000 gallon tanks, it is possible it will take that whole area in front of the dumpsters It would block access to the building and the dumpsters Also the new transformer is shown right in front of the existing transformer The existing fence would have to be removed to make room for the new one Will the fence need to be modified to go around the new transformer?

Response The generator and fuel tanks with be on a proposed pad located just north of the dumpster driveway The existing fence does not need to be modified to go around the new transformer See Attached REVISED SHEET ESP-1 0

12 Where is the location of the existing generator outdoor tap box?

Response There is not an existing tap box

13 Is the generator and fuel tanks on one single concrete pad?

Response Yes

14 On Sheet ESP-1 0 the block heaters and mini-power zone is fed from MCC Where is MCC located at and what is the distance between the MCC and the generator?

Response See Sheet E 8 0

15 Sheet 2 of 10 shows a 4" slab 6" below the main pad, with fence post in the slab and some expansion joint material against what appears to be a cement curb That is the west side as shown Wouldn't that apply to the south side where the existing curb is and not the west side? The right side shows crushed concrete and says to apply it on three sides

Response Yes, the existing curb is on the south side of the proposed generator slab

16 On The tank detail on Dwg E5 appears to show the fill bucket assembly on one end of the tanks and the Fuel Dispenser on the other Which end do you intend the fill bucket for fueling to be and which end do you intend to have the dispenser equipment mounted on There is only a gate on one end

Response The fill bucket and dispensing equipment shall be on the gate end A single ground level fill system designed to fill multiple tanks can be used

17 Dwg sheet 2 of 10 shows a detail for a crushed concrete access road Where does that apply?

Response This detail is not needed There is no crushed concrete access road in this project

18 Can Cutler Hammer Transfer Switches be accepted?

Response If they meet the specifications they will be acceptable

19 Will the feed from the school MCC to the mini power zone be in duct bank or direct bury pvc?

Response It shall be in duct bank

20 Will Just to confirm that the new outdoor transfer / main switches are to be one bussed lineup as shown and to be nema 4x stainless If bussed, do you want the main bussing to be rated at 7000 amps?

Response There are two separate switches not currently bussed, they will serve each of the switch boards

20 Is the new tap box to be nema 4x SS or will galvanized be accepted?

Response Nema 4x SS

21 You are asking for schedule 40 double wall stainless fuel lines from tank to generator Will it be welded in place or screw pipe?

Response It shall be screw pipe and shall be SINGLE WALL stainless steel

22 Will double wall be required for all tank interconnections and piping to the dispenser station?

Response Yes

23 Will there be a dispensing station on each tank as shown on the drawings or will there be just one?

Response One on each tank

24 Specifications call for a minimum of 12" deep clearing for site preparation Will select fill be acceptable to use to build back up then apply the 2' sand bed cap as shown on dwg sheet 2 of 10?

Response Yes

25 Since the School District may use the fuel for vehicles at times, should the fuel that is filled in the two tanks be red diesel or road diesel?

Response Yes, the tanks shall be filled with road diesel

26 I have been told that the Asco transfer switch is too large for a 4x rating Will a 3r enclosure in 304 SS be acceptable?

Response No

27 What size pipe is required for the feeder and return for the generator?

Response 3-inch

END OF ADDENDUM NO 4

GENERATOR DATA
2,000 KW 2,500 KVA @ 80°F
480V 3Φ 4W DIESEL GENERATOR SET

NFPA 110 Class 1 41
Type 10
Level 2

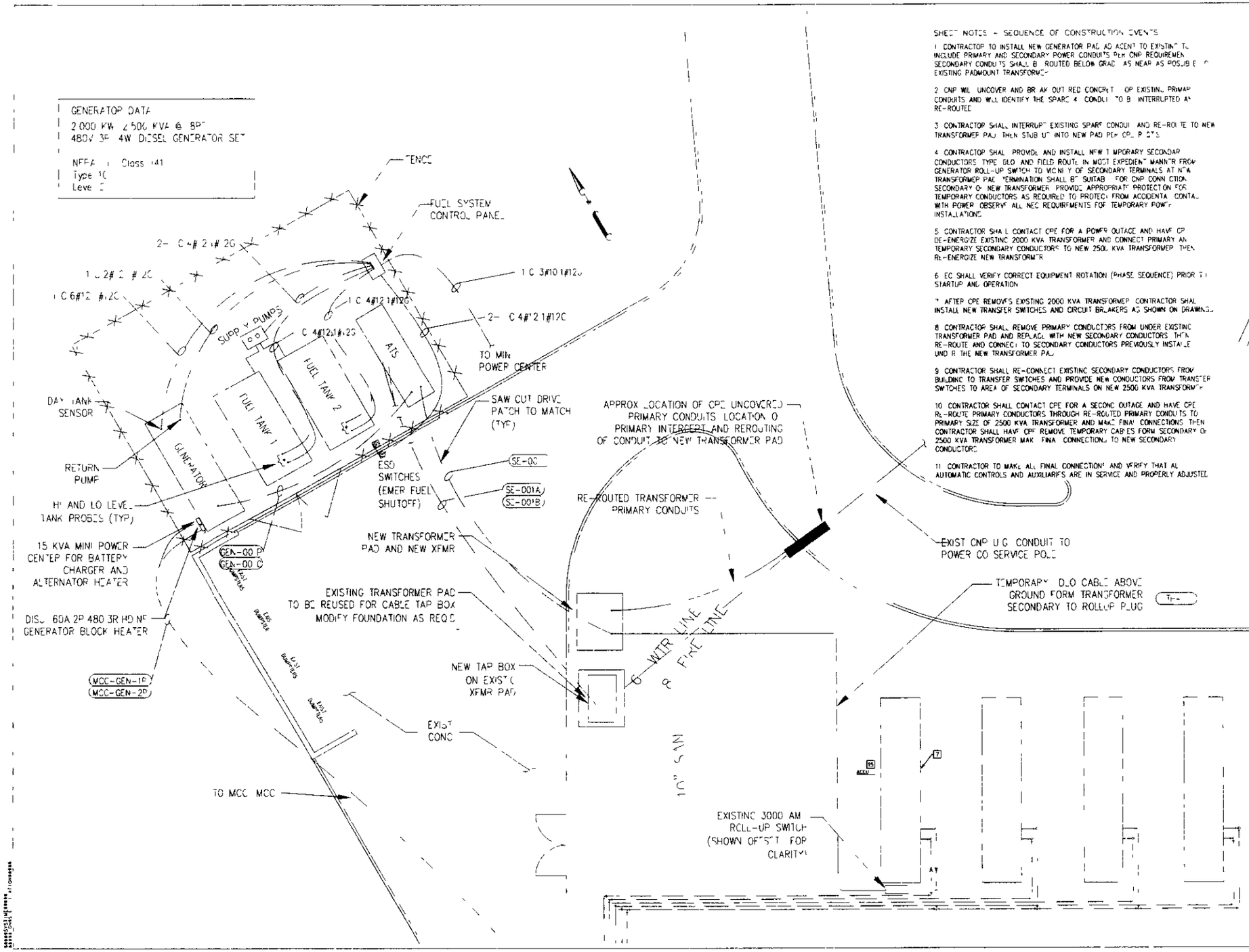

SHEET NOTES - SEQUENCE OF CONSTRUCTION EVENTS

1 CONTRACTOR TO INSTALL NEW GENERATOR PAD ADJACENT TO EXISTING TO INCLUDE PRIMARY AND SECONDARY POWER CONDUITS PER CNP REQUIREMEN SECONDARY CONDUITS SHALL BE ROUTED BELOW GRADE AS NEAR AS POSSIBLE TO EXISTING PADMOUNT TRANSFORMER

2 CNP WILL UNCOVER AND BREAK OUT RED CONCRETE OF EXISTING PRIMARY CONDUITS AND WILL IDENTIFY THE SPARE 4" CONDUIT TO BE INTERRUPTED AND RE-ROUTED

3 CONTRACTOR SHALL INTERRUPT EXISTING SPARE CONDUIT AND RE-ROUTE TO NEW TRANSFORMER PAD THEN STUB UP INTO NEW PAD PER CPE PROJECTS

4 CONTRACTOR SHALL PROVIDE AND INSTALL NEW TEMPORARY SECONDARY CONDUCTORS TYPE DLO AND FIELD ROUTE IN MOST EXPEDIENT MANNER FROM GENERATOR ROLL-UP SWITCH TO VICINITY OF SECONDARY TERMINALS AT NEW TRANSFORMER PAD TERMINATION SHALL BE SUITABLE FOR CNP CONNECTION SECONDARY OF NEW TRANSFORMER PROVIDE APPROPRIATE PROTECTION FOR TEMPORARY CONDUCTORS AS REQUIRED TO PROTECT FROM ACCIDENTAL CONTACT WITH POWER OBSERVE ALL NEC REQUIREMENTS FOR TEMPORARY POWER INSTALLATIONS

5 CONTRACTOR SHALL CONTACT CPE FOR A POWER OUTAGE AND HAVE CPE DE-ENERGIZE EXISTING 2000 KVA TRANSFORMER AND CONNECT PRIMARY AND TEMPORARY SECONDARY CONDUCTORS TO NEW 2500 KVA TRANSFORMER THEN RE-ENERGIZE NEW TRANSFORMER

6 EC SHALL VERIFY CORRECT EQUIPMENT ROTATION (PHASE SEQUENCE) PRIOR TO STARTUP AND OPERATION

7 AFTER CPE REMOVES EXISTING 2000 KVA TRANSFORMER CONTRACTOR SHALL INSTALL NEW TRANSFER SWITCHES AND CIRCUIT BREAKERS AS SHOWN ON DRAWINGS

8 CONTRACTOR SHALL REMOVE PRIMARY CONDUCTORS FROM UNDER EXISTING TRANSFORMER PAD AND REPLACE WITH NEW SECONDARY CONDUCTORS THEN RE-ROUTE AND CONNECT TO SECONDARY CONDUCTORS PREVIOUSLY INSTALLED UNDER THE NEW TRANSFORMER PAD

9 CONTRACTOR SHALL RE-CONNECT EXISTING SECONDARY CONDUCTORS FROM BUILDING TO TRANSFER SWITCHES AND PROVIDE NEW CONDUCTORS FROM TRANSFER SWITCHES TO AREA OF SECONDARY TERMINALS ON NEW 2500 KVA TRANSFORMER

10 CONTRACTOR SHALL CONTACT CPE FOR A SECOND OUTAGE AND HAVE CPE RE-ROUTE PRIMARY CONDUCTORS THROUGH RE-ROUTED PRIMARY CONDUITS TO PRIMARY SIDE OF 2500 KVA TRANSFORMER AND MAKE FINAL CONNECTIONS THEN CONTRACTOR SHALL HAVE CPE REMOVE TEMPORARY CABLES FORM SECONDARY OF 2500 KVA TRANSFORMER MAKE FINAL CONNECTIONS TO NEW SECONDARY CONDUCTORS

11 CONTRACTOR TO MAKE ALL FINAL CONNECTIONS AND VERIFY THAT ALL AUTOMATIC CONTROLS AND AUXILIARIES ARE IN SERVICE AND PROPERLY ADJUSTED

GENERAL

ELECTRICAL SCOPE OF WORK

PROVIDE AND INSTALL NEW 2000 KW DIESEL GENERATOR EXTERNAL TANKAGE AND AUTOMATIC TRANSFER SWITCH AS REQUIRED FOR FULLY AUTOMATIC OPERATION OF EMERGENCY GENERATOR POWER

2 TWO ELECTRICAL OUTAGES WILL BE REQUIRED MAKE ALL COORDINATION WITH POWER COMPANY AND PAY ALL ASSOCIATED FEES THERE IS A CPE

NOTE TERMS AND CONDITIONS CONTRACT AND THIS SHALL BE CONSIDERED TO BE AN INTEGRAL PART OF THIS CONTRACT OBSERVE ALL CONDITIONS AND OTHER CPE REQUIREMENTS

3 THERE IS AN EXISTING GENERATOR ROLL-UP PLUG THAT WILL BE USED TO CONNECT TEMPORARY POWER FOR THE SCHOOL WHILE WORK IS BEING CARRIED OUT

4 PROPOSED BIDDERS SHALL VISIT THE JOB SITE PRIOR TO BID TO BECOME FAMILIARIZED WITH THE PROJECT CONDITIONS

SPECIAL INSTRUCTIONS

ALL DIMENSIONS TO EXISTING STRUCTURES OR SITE ELEMENTS SHALL BE VERIFIED IN FIELD

2 POC FOR CNP REPRESENTATIVE FRANK DELEON 713-207-494 CONTACT CNP FOR COORDINATION PRIOR TO DOING ANY WORK

JAMES E THOMPSON JR 71302 REGISTERED PROFESSIONAL ENGINEER
01-22-11

James E Thompson
James E. Thompson & Associates
Consulting Engineers
1100 Glendale Street 1700
Houston, Texas 77011
(713) 2000 F 2000

DATE	REVISION	BY

SANTA FE HIGH SCHOOL

PERMANENT EMERGENCY GENERATOR

SCHOOL SITE PLAN

L.A. Engineering & Surveying, Inc.
2929 Briarpark Drive
Suite 800
Houston, Texas 77042
Phone 713.953.8200
Fax 713.953.8026
FIRM F-1386

JA PROJECT NO 0384 900

DRAWN ____ DESIGN ____ DATE APR 0

SCALE 1/8" 0

SHEET N 0

THE COUNTY OF GALVESTON

RUFUS G CROWDER, CPPB
PURCHASING AGENT

GWEN MCLAREN, CPPB
ASST PURCHASING AGENT

COUNTY COURTHOUSE
722 Moody (21st Street)
Fifth (5th) Floor
GALVESTON TEXAS 77550
(409) 770-5371

October 20, 2011

RE: ADDENDUM #5
Bid #B111056 - CDBG Round 1 Santa Fe High School Generator
LJA Project No 0384-9003E

To All Prospective Bidders,

The following information is being provided to aid in preparation of your bid submittal(s)

OPENING DATE:
Bid #B111056 – CDBG Round 1 Santa Fe High School Generator - LJA Project No. 0384-9003E originally scheduled to be opened on Tuesday, October 25, 2011 at 2:00 p.m. has been postponed until further notice due to clarifications in the project specifications.

If you have any further questions regarding this bid, please address them to Rufus G Crowder, CPPB, Purchasing Agent, via e-mail at rufus.crowder@co.galveston.tx.us, or contact the Purchasing Department at (409) 770-5371

Please excuse us for any inconvenience that this may have caused

Sincerely,

Rufus G Crowder, CPPB
Purchasing Agent
Galveston County

THE COUNTY OF GALVESTON

RUFUS G. CROWDER, CPPB
PURCHASING AGENT

GWEN MCLAREN, CPPB
ASST. PURCHASING AGENT

COUNTY COURTHOUSE
722 Moody (21st Street)
Fifth (5th) Floor
GALVESTON, TEXAS 77550
(409) 770-5371

November 1, 2011

RE: ADDENDUM #6
Bid #B111056 – CDBG Round 1 Santa Fe High School Generator
LJA Project No. 0384-9003E

To All Prospective Bidders:

The following information is being provided to aid in preparation of your bid submittal(s).

OPENING DATE
Bid #B111056 – CDBG Round 1 Santa Fe High School Generator - LJA Project No. 0384-9003E originally scheduled to be opened on Tuesday, October 25, 2011 at 2:00 p.m. has been re-scheduled. The new deadline for submitting bids is as follows:

Date: Tuesday, November 8, 2011
Time: 2:00 p.m.

Please send Bid submittals to:
Galveston County Purchasing Agent
Attention: Rufus Crowder, CPPB
722 Moody (21st Street), Fifth (5th) Floor
Galveston, Texas 77550

If you have any further questions regarding this bid, please address them to Rufus G. Crowder, CPPB, Purchasing Agent via e-mail at rufus.crowder@co.galveston.tx.us or contact the Purchasing Department at (409) 770-5371.

Please excuse us for any inconvenience that this may have caused.

Sincerely,

Gwen McLaren, CPPB

Gwen McLaren, CPPB
Assistant Purchasing Agen
Galveston County

ADDENDUM NO 6
FOR
COUNTY OF GALVESTON
TO
SANTA FE HIGH SCHOOL GENERATOR

LJA PROJECT NO E0384-9003E

November 3, 2011

STATE OF TEXAS
GREGG B HAAN
90159
LICENSED
PROFESSIONAL ENGINEER

BID OPENING DATE

CHANGED TO November 8, 2011 2 00 pm

Please send Bid submittals to
Galveston County Purchasing Agent
Attention Rufus Crowder, CPPB
722 Moody (21st Street), Fifth (5th) Floor
Galveston, Texas 77550

Addenda – Changes in Bid Proposal

CLARIFICATION· Replace Bid Proposal with REVISED Bid Proposal (attached)

Addenda – Changes in Plans

CLARIFICATION
Sheet 3 SCHOOL SITE PLAN ESP -1 0 Replace existing Sheet3 with Revised Sheet 3 (attached)

Sheet 4 ONE LINE DIAGRAM E-2 Replace existing Sheet4 with Revised Sheet 4 (attached)

Sheet 10 MISCELLANEOUS DETAILS / SCHEDULE E8 0 Replace existing Sheet10 with Revised Sheet 10 (attached)

Cable tap box shown on Sheet 4 ONE LINE DIAGRAM E-2 to have the following features
1 7000 amp rated 480v 3 phase 4 wires
2 Two separate NEMA 4X switchboard sections approx 42"x42" each section, one 3000 amp one 4000 amp
3 The 4000 amp section to have 8 750 KCMIL copper conductors in and 10 500 KCMIL out
4 The 3000 amp section to have 6 500 KCMIL copper conductors in and 8 500 KCMIL out
5 Line sections to be equipped with bottom fed lug arrangement suitable for landing
8 sets of 750 KCMIL copper conductors, neutral and ground wires
5 Load section to be equipped with bottom fed lug arrangement suitable for landing
10 sets of 500 KCMIL copper conductors neutral and ground wires

The conductors between the transformer secondary terminals and the transfer switches are to be 14 sets of 750 KCMIL, 8 sets to the 4000 amp ATS and 6 sets to the 3000 amp ATS The conductors from the load side of the ATS's are to be the same

The cable tap boxes are to be rated 4000 amps and 3000 amps respectively, and are to accommodate 8 sets of 750 KCMIL in and 10 sets of 500 KCMIL out

On E-2 the temporary connections now shown to be made between the transformer and the generator rollup switch will be made between the cable tap box and the rollup switch

Additional Questions

1 On Sheet E-6 the supply pumps shown on the block diagram seems to be in-line pumps feeding the generator and a return pump from the daytank to the storage tanks Is there any specification on those pumps? Like what kind of output pressure do they need to be? What's their horsepower rating?

Response This shall be part of the fuel pump management system package that fuel management installer shall provide as required

2 On Sheet E-7 there seems to be two type of control switch at each tank that is wired to the Fuel transfer Panel On sheet E-6, in the ladder schematic, a hi-level switch and a leak detector switch is shown Should there be two of each since there are two tanks? Are there any specifications on them?

Response This shall be part of the fuel pump management system package that fuel management installer shall provide as required

3 CenterPoint has quoted their cost based on 8 hours of straight time, but I do not see this done without overtime or weekend work on their part How will additional charges by CenterPoint be handled?

Response Contractor must include all charges by CenterPoint Energy required to complete the project in their bid

4 Are Fuel Lines schedule 40 double wall stainless steel?

Response Fuel Lines can be SINGLE WALL and can be black iron pipe

5 Can a DC Hypot be used for cable testing instead of an AC Hypot unit?

Response Yes DC Hypot can be used

6 Does all underground conduit have to be schedule 80 pvc?

Response Everything underground shall be Schedule 40 encased in concrete All underground wire shall be XHHW

END OF ADDENDUM NO 6

BID PROPOSAL

Date _____

Bid of _____
(Legal Name of Bidder – Company)

[ ] an individual proprietorship

[ ] a corporation organized and existing under the laws of _____

[ ] a partnership consisting of _____

_____

[ ] a joint venture

[ ] other _____

FOR

CONSTRUCTION OF THE
PERMANENT EMERGENCY GENERATOR
TO SERVE
SANTA FE HIGH SCHOOL

IN
GALVESTON COUNTY, TEXAS
LJA JOB NO 0384-9003E

TO: SANTA FE HIGH SCHOOL GENERATOR
Please send Bid submittals to
Galveston County Purchasing Agent
Attention: Rufus Crowder, CPPB
722 Moody (21st Street), Fifth (5th) Floor
Galveston, Texas 77550

PROPOSAL BIDDING SHEET

CONSTRUCTION OF THE
PERMANENT EMERGENCY GENERATOR
TO SERVE
SANTA FE HIGH SCHOOL

IN
GALVESTON COUNTY, TEXAS
LJA JOB NO 0384-9003E

Gentlemen

Pursuant to the foregoing Invitation and Instructions to Bidders, the undersigned bidder hereby proposes to do all the work for the unit prices bid to furnish all necessary superintendence, labor machine equipment, tools materials, insurance and miscellaneous items, to complete all work according to the bids, as provided in the construction plan and contract documents for the construction of the Permanent Emergency Generator to serve Santa Fe High School, and clean up the site to the satisfaction of the Owner/Engineer, and bind himself on acceptance of this proposal to execute a contract and bonds for completing said project within the time stated for the following prices, to wit

BASE BID ITEMS

ITEM NO	QTY	UNIT	ITEM DESCRIPTION AND TOTAL WRITTEN UNIT PRICE	UNIT PRICE	AMOUNT
1	1	LS	Site work Including Concrete Pad, Concrete Paving, Chain Link Fence with Gate Fine Grading bollards, and Seeding Complete in place for _____dollars and _____ cents per unit		
2	1	LS	Standby Diesel Generator as Specified in the Plans and Specifications, Including Generator, Fuel Tanks **(to be filled by contractor at completion of project),** Sound Attenuating Enclosure Complete in place for _____dollars and _____ cents per unit	$_____	$_____
3	1	LS	Electrical System Installation for Standby Diesel Generator, Including Generator Feeders, Automatic Transfer Switch, Centerpoint Energy T&C fee & Requirements, and All Other Appurtenances as Shown on Plans and as Described in Specifications for a Complete Operating System Complete in place for _____dollars and _____ cents per unit	$_____	$_____

SUBTOTAL BASE BID ITEMS $_____

PROPOSAL BIDDING SHEET

CONSTRUCTION OF THE
PERMANENT EMERGENCY GENERATOR
TO SERVE
SANTA FE HIGH SCHOOL

IN
GALVESTON COUNTY, TEXAS
LJA JOB NO 0384-9003E

SUBTOTAL BASE BID ITEMS $_____

TOTAL AMOUNT BID $_____

It is understood that in the event the successful bidder fails to enter into the Contract and to furnish a Performance Bond and Payment Bond in the amount of 100 percent of the Contract and for all parts of the work, as specified in the Instructions to Bidders, the Bidder will forfeit the Cashier s Check OR Bid Bond, as provided in the Contract Documents

The undersigned proposes, if awarded the Contract to begin work as stipulated in the written Notice to Proceed issued by the Engineer and to substantially complete the work within 170 calendar days after the date the work commences and to complete the project within 180 calendar days after the date of work commences

This bid proposal shall be considered part of the contract

(Signature)	(Company Name – Bidder)
(Type Name)	(Address)
(Title)	(City) (County) (Zip)
(Attest)	(Phone No)
(Seal If Bidder is a Corporation)	(Fax No)
	(E-mail Address)

PROPOSAL BIDDING SHEET

CONSTRUCTION OF THE
PERMANENT EMERGENCY GENERATOR
TO SERVE
SANTA FE HIGH SCHOOL

IN
GALVESTON COUNTY, TEXAS
LJA JOB NO 0384-9003E

ACKNOWLEDGMENT OF RECEIPT OF ADDENDUM

ADDENDUM NO 1 _____ _____
Signature Date

ADDENDUM NO 2 _____ _____
Signature Date

ADDENDUM NO 3 _____ _____
Signature Date

ADDENDUM NO 4 _____ _____
Signature Date

ADDENDUM NO 5 _____ _____
Signature Date

ADDENDUM NO 6 _____ _____
Signature Date

1. ORDER SWITCHBOARD
CONSTRUCTION NEMA 3R.

2 HEIGHT APPROXIMATELY 95".

CABLE TAP BOXES

SCALE: AS NOTED

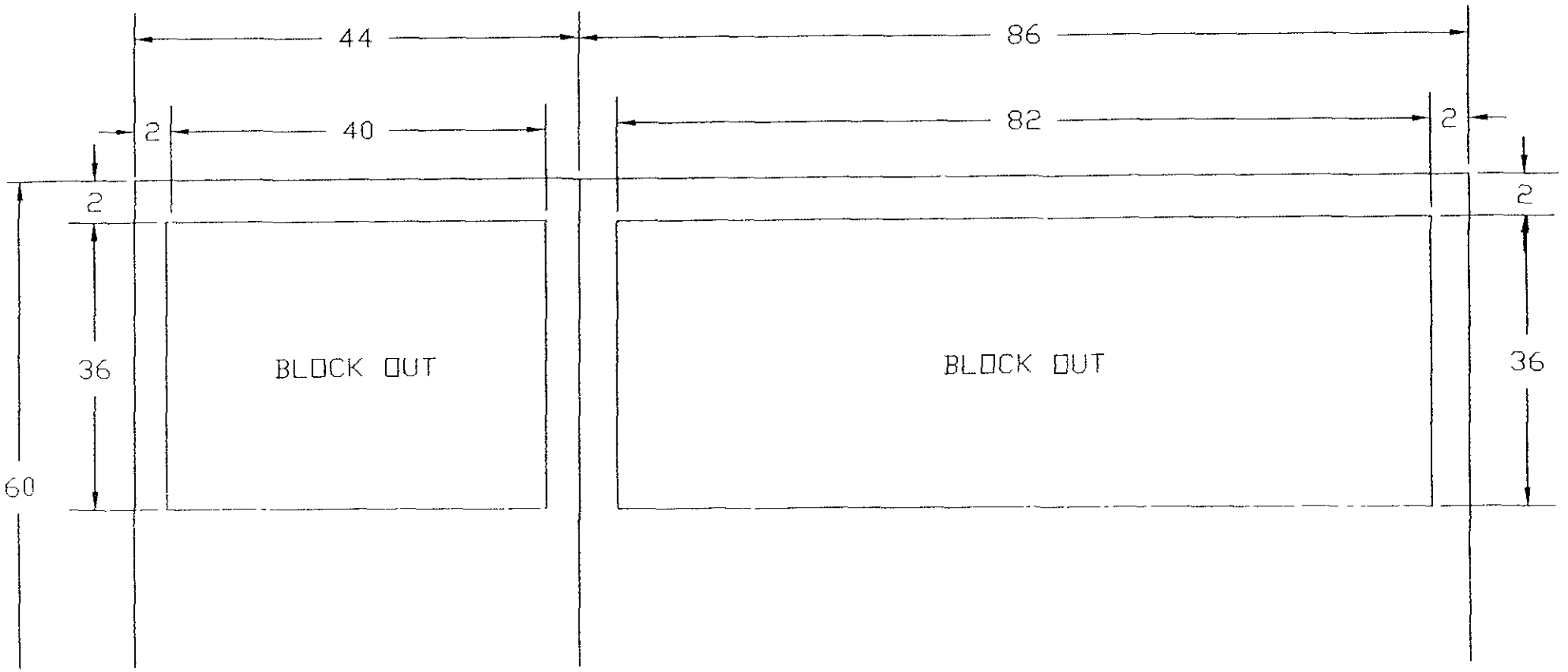

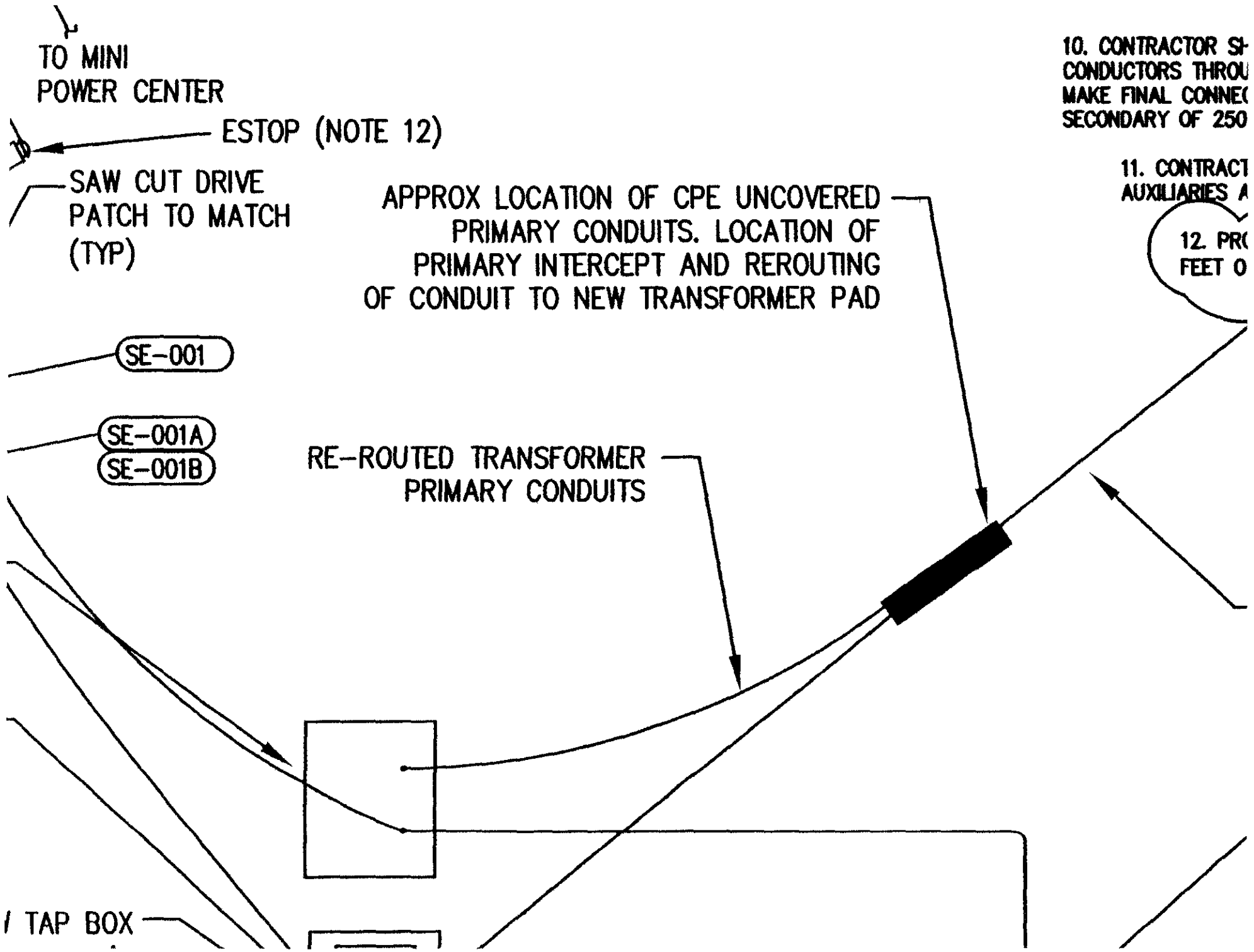
TO MINI
POWER CENTER
ESTOP (NOTE 12)
SAW CUT DRIVE
PATCH TO MATCH
(TYP)
APPROX LOCATION OF CPE UNCOVERED
PRIMARY CONDUITS. LOCATION OF
PRIMARY INTERCEPT AND REROUTING
OF CONDUIT TO NEW TRANSFORMER PAD
SE-001
SE-001A
SE-001B
RE-ROUTED TRANSFORMER
PRIMARY CONDUITS
TAP BOX
10. CONTRACTOR SH
CONDUCTORS THROU
MAKE FINAL CONNEC
SECONDARY OF 250
11. CONTRACT
AUXILIARIES A
12. PRO
FEET O

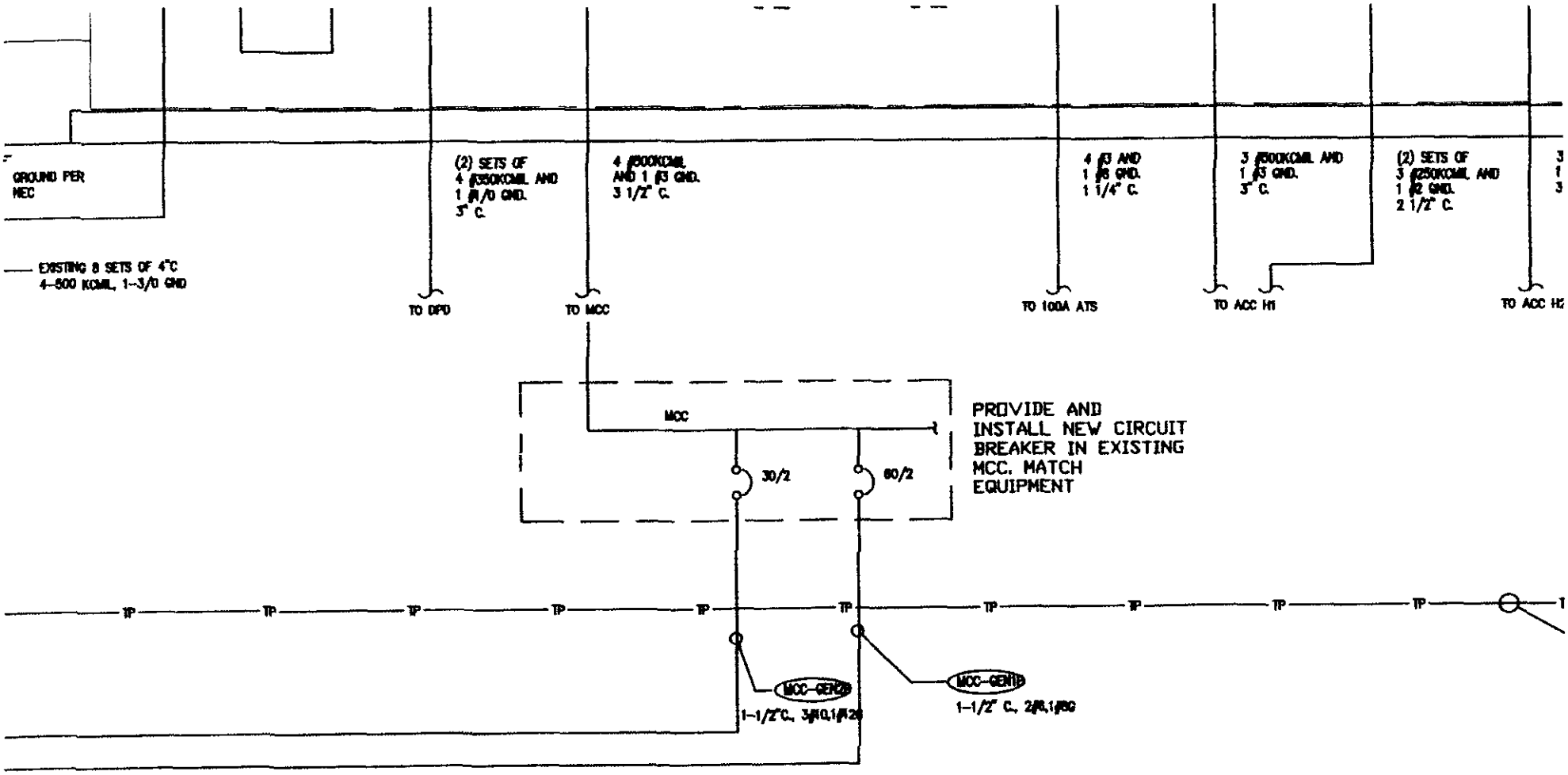

IS

KVA
579
66
64
58
(474)
(54)
767 KVA ADDED

FINAL ELECTRICAL LOAD ANALYSIS

CALCULATIONS	KVAS
EXISTING 12 MONTH PEAK	1969
X 125%	2461
AUDITORIUM (ADDED)	724
CENTRAL PLANT (ADDED)	767
CENTRAL PLANT (REMOVED)	528
TOTAL CONNECTED	3424 KVA/ 4123 AMPS @ 480 V, 3PH, 4W

PARTIAL FLOOR PLAN-CENTRAL PLANT

SCALE: 1 =10'-0"

KEYED NOTES (THIS DETAIL ONLY)

(1) EXISTING MD OR CONTROL CENTER MCC

(2) EXISTING OVERHEAD CONDUIT BACK WITH NEW CONDUIT FROM MCC

(3) NEW CONDUIT TO BE FIELD ROUTED TO OVERHEAD TO OUTSIDE THEN UNDERGROUND TO NEW MINI POWER CENTER LOCATED AT NEW CITERA OR

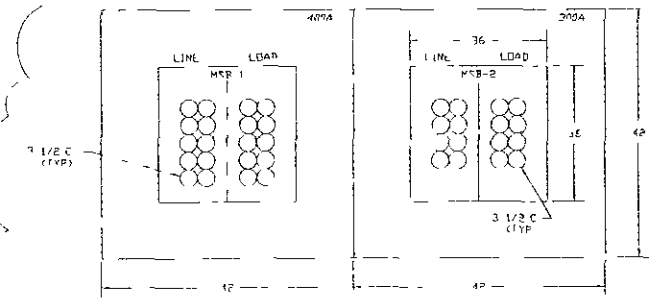

NOTES

1 ORDER SWITCHBOARD CONSTRUCTION NEMA 3R

2 HEIGHT APPROXIMATELY 95

CABLE TAP BOXES

SCALE: AS NOTED

NOTES

1 ENCLOSURES TO BE FABRICATED FROM FORMED CHANNEL FRAMEWORK AND CODE GAUGE SHEET STEEL ALL STEEL PARTS SHALL BE PREPARED FOR PAINTING BY A FIVE STEP CLEANING PHOSPHATIZING AND SEALING PROCESS THE PARTS SHALL THEN BE PAINTED ASA NO 61 GRAY UTILIZING POLYESTER POWDER COATING APPLIED BY THE ELECTROSTATIC METHOD AND CURED IN A BAKING OVEN

2 ALL LUGS TO BE MECHANICAL TYPE SUITABLE FOR COPPER CABLE

3 SYSTEM VOLTAGE 480/277V 3Ø 4W 60H

4 ALL BUS TO BE SILVER PLATED COPPER WITH CARRYING CAPACITY BASED ON NEMA AND U/L STANDARDS

5 THE CALIBRATION AND SETTINGS OF ALL PROTECTIVE DEVICES MUST BE DETERMINED BY A SHORT CIRCUIT AND COORDINATION STUDY PROVIDED BY OTHERS

6 CONTRACTOR SHALL PROVIDE AN ADDITIONAL PROTECTIVE COAT OF TWO PART EPOXY PAINT ASA 60 SUITABLE FOR COASTAL USE SUBMIT PAINT SELECTION FOR APPROVAL

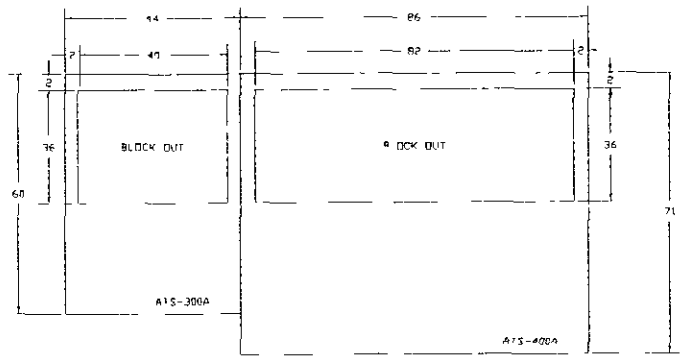

NOTES

300A STANARD LUGS 9 SETS 4/0-500 KCMIL 3Ø 4 0 500 NEUTRAL (TOTAL)

400A STANDARD LUGS 10 SETS 3/0 750 KCMIL 4Ø 4/0 500 NEUTRAL (TOTAL)

AUTOMATIC TRANSFER SWITCH OUTLINE DRAWING

SCALE: AS NOTED

NOTES

1 ENCLOSURES TO BE FABRICATED FROM FORMED CHANNEL FRAMEWORK AND CODE GAUGE SHEET STEEL ALL STEEL PARTS SHALL BE PREPARED FOR PAINTING BY A FIVE STEP CLEANING PHOSPHATIZING AND SEALING PROCESS THE PARTS SHALL THEN BE PAINTED ASA NO 61 GRAY UTILIZING POLYESTER POWDER COATING APPLIED BY THE ELECTROSTATIC METHOD AND CURED IN A BAKING OVEN

2 ALL LUGS TO BE MECHANICAL TYPE SUITABLE FOR COPPER CABLE

3 SYSTEM VOLTAGE 480/277V 3Ø 4W 60HZ

4 ALL BUS TO BE SILVER PLATED COPPER WITH CARRYING CAPACITY BASED ON NEMA AND U/L STANDARDS

5 THE CALIBRATION AND SETTINGS OF ALL PROTECTIVE DEVICES MUST BE DETERMINED BY A SHORT CIRCUIT AND COORDINATION STUDY PROVIDED BY OTHERS

6 CONTRACTOR SHALL PROVIDE AN ADDITIONAL PROTECTIVE COAT OF TWO PART EPOXY PAINT ASA-60 SUITABLE FOR COASTAL USE SUBMIT PAINT SELECTION FOR APPROVAL

NOTES

1 BLOCK OUTS SHALL NOT BE MADE UNTIL APPROVED SHOP DRAWINGS ARE ISSUED

2 ALL DRAWINGS PROVIDED BASED ON CUTLER-HAMER SIZING CRITERIA OTHER MANUFACTURERS MAY VARY

James E Thompson

DATE	REVISIONS	DESCRIPTION	BY

SANTA FE HIGH SCHOOL

PERMANENT EMERGENCY GENERATOR

MISCELLANEOUS DETAILS/SCHEDULE

L.M. Engineering & Surveying, Inc.

L.M. PROJECT NO.: 0384-9003E

E8.0

SHEET NO. OF

EMERGENCY GENERATOR FOR SANTA FE HIGH SCHOOL - PROJECT NO. 0384-9003E

GENERATOR DATA
2,000 KW 2,500 KVA @ 8PF
480V 3P 4W DIESEL GENERATOR SET

NFPA 110 Class 141
Type 10
Level 2

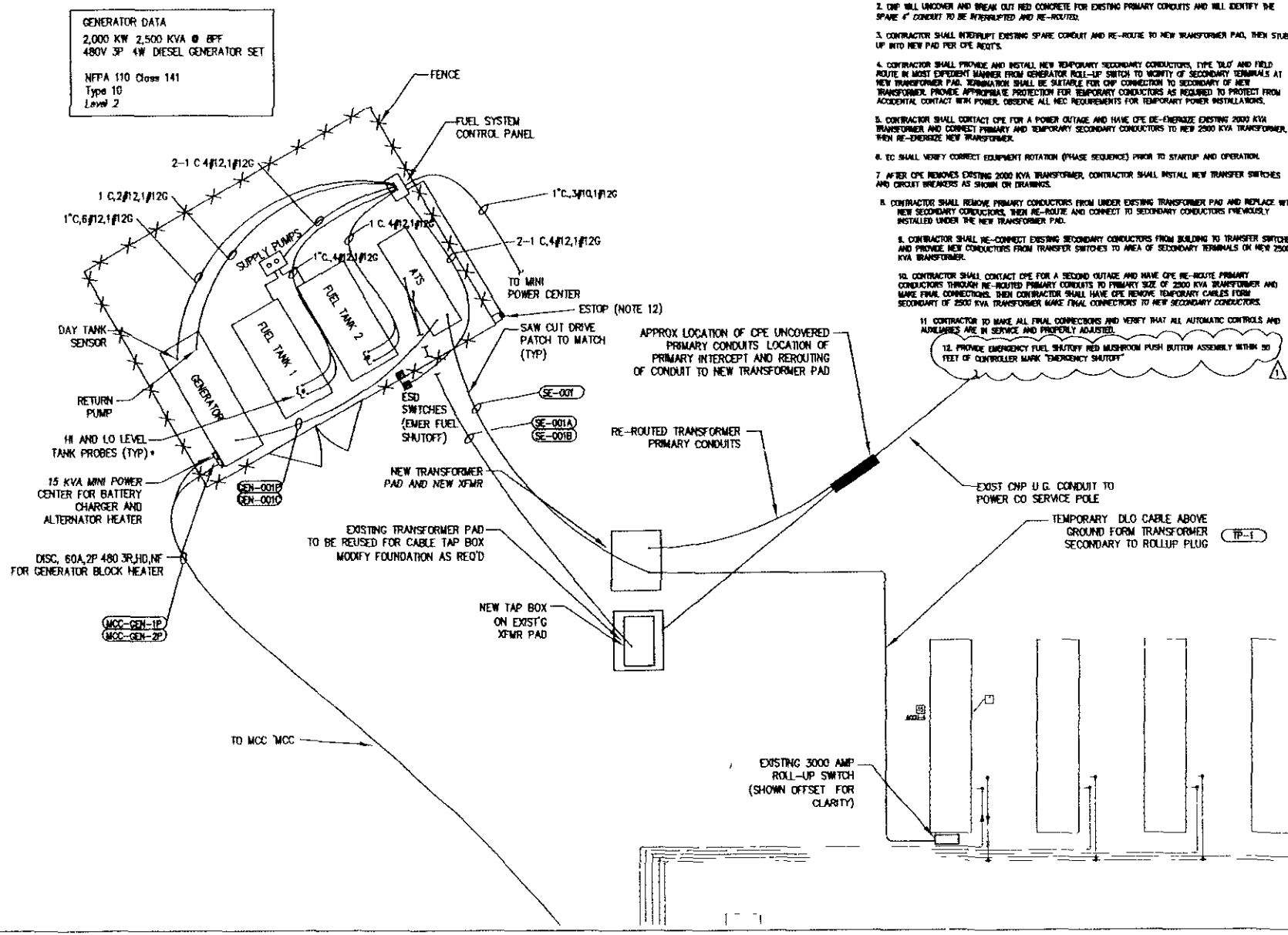

SHEET NOTES – SEQUENCE OF CONSTRUCTION EVENTS

1. CONTRACTOR TO INSTALL NEW GENERATOR PAD ADJACENT TO EXISTING TO INCLUDE PRIMARY AND SECONDARY POWER CONDUITS PER CNP REQUIREMENTS. SECONDARY CONDUITS SHALL BE ROUTED BELOW GRADE AS NEAR AS POSSIBLE TO EXISTING PADMOUNT TRANSFORMER.

2. CNP WILL UNCOVER AND BREAK OUT RED CONCRETE FOR EXISTING PRIMARY CONDUITS AND WILL IDENTIFY THE SPARE 4" CONDUIT TO BE INTERRUPTED AND RE-ROUTED.

3. CONTRACTOR SHALL INTERRUPT EXISTING SPARE CONDUIT AND RE-ROUTE TO NEW TRANSFORMER PAD, THEN STUB UP INTO NEW PAD PER CPE REQ'TS.

4. CONTRACTOR SHALL PROVIDE AND INSTALL NEW TEMPORARY SECONDARY CONDUCTORS, TYPE "DLO" AND FIELD ROUTE IN MOST EXPEDIENT MANNER FROM GENERATOR ROLL-UP SWITCH TO VICINITY OF SECONDARY TERMINALS AT NEW TRANSFORMER PAD. TERMINATION SHALL BE SUITABLE FOR CNP CONNECTION TO SECONDARY OF NEW TRANSFORMER. PROVIDE APPROPRIATE PROTECTION FOR TEMPORARY CONDUCTORS AS REQUIRED TO PROTECT FROM ACCIDENTAL CONTACT WITH POWER. OBSERVE ALL NEC REQUIREMENTS FOR TEMPORARY POWER INSTALLATIONS.

5. CONTRACTOR SHALL CONTACT CPE FOR A POWER OUTAGE AND HAVE CPE DE-ENERGIZE EXISTING 2000 KVA TRANSFORMER AND CONNECT PRIMARY AND TEMPORARY SECONDARY CONDUCTORS TO NEW 2500 KVA TRANSFORMER, THEN RE-ENERGIZE NEW TRANSFORMER.

6. EC SHALL VERIFY CORRECT EQUIPMENT ROTATION (PHASE SEQUENCE) PRIOR TO STARTUP AND OPERATION.

7. AFTER CPE REMOVES EXISTING 2000 KVA TRANSFORMER, CONTRACTOR SHALL INSTALL NEW TRANSFER SWITCHES AND CIRCUIT BREAKERS AS SHOWN ON DRAWINGS.

8. CONTRACTOR SHALL REMOVE PRIMARY CONDUCTORS FROM UNDER EXISTING TRANSFORMER PAD AND REPLACE WITH NEW SECONDARY CONDUCTORS, THEN RE-ROUTE AND CONNECT TO SECONDARY CONDUCTORS PREVIOUSLY INSTALLED UNDER THE NEW TRANSFORMER PAD.

9. CONTRACTOR SHALL RE-CONNECT EXISTING SECONDARY CONDUCTORS FROM BUILDING TO TRANSFER SWITCHES AND PROVIDE NEW CONDUCTORS FROM TRANSFER SWITCHES TO AREA OF SECONDARY TERMINALS ON NEW 2500 KVA TRANSFORMER.

10. CONTRACTOR SHALL CONTACT CPE FOR A SECOND OUTAGE AND HAVE CPE RE-ROUTE PRIMARY CONDUCTORS THROUGH RE-ROUTED PRIMARY CONDUITS TO PRIMARY SIDE OF 2500 KVA TRANSFORMER AND MAKE FINAL CONNECTIONS. THEN CONTRACTOR SHALL HAVE CPE REMOVE TEMPORARY CABLES FORM SECONDARY OF 2500 KVA TRANSFORMER MAKE FINAL CONNECTIONS TO NEW SECONDARY CONDUCTORS.

11. CONTRACTOR TO MAKE ALL FINAL CONNECTIONS AND VERIFY THAT ALL AUTOMATIC CONTROLS AND AUXILIARIES ARE IN SERVICE AND PROPERLY ADJUSTED.

12. PROVIDE EMERGENCY FUEL SHUTOFF RED MUSHROOM PUSH BUTTON ASSEMBLY WITHIN 50 FEET OF CONTROLLER MARK "EMERGENCY SHUTOFF"

1

ELECTRICAL SCOPE OF WORK

1. PROVIDE AND INSTALL NEW 2000 KW DIESEL GENERATOR, EXTERNAL TANKAGE, AND AUTOMATIC TRANSFER SWITCH AS REQUIRED FOR FULLY AUTOMATIC OPERATION OF EMERGENCY GENERATOR POWER.

2. TWO ELECTRICAL OUTAGES WILL BE REQUIRED. MAKE ALL COORDINATION WITH POWER COMPANY AND PAY ALL ASSOCIATED FEES. THERE IS A CPE TERMS AND CONDITIONS CONTRACT AND THIS SHALL BE CONSIDERED TO BE AN INTEGRAL PART OF THIS CONTRACT. OBSERVE ALL CONDITIONS AND OTHER CPE REQUIREMENTS.

3. THERE IS AN EXISTING GENERATOR ROLL-UP PLUG THAT WILL BE USED TO CONNECT TEMPORARY POWER FOR THE SCHOOL WHILE WORK IS BEING CARRIED OUT

4. PROPOSED BIDDERS SHALL VISIT THE JOB SITE PRIOR TO BID TO BECOME FAMILIARIZED WITH THE PROJECT CONDITIONS.

SPECIAL INSTRUCTIONS

1. ALL DIMENSIONS TO EXISTING STRUCTURES OR SITE ELEMENTS SHALL BE VERIFIED IN FIELD.

2. POC FOR CNP REPRESENTATIVE IS FRANK DELEON, 713-207-4641 CONTACT CNP FOR COORDINATION PRIOR TO DOING ANY WORK.

STATE OF TEXAS
JAMES E. THOMPSON
76302
REGISTERED PROFESSIONAL ENGINEER
01 22 11

James E Thompson

DATE	REVISIONS	BY

SANTA FE HIGH SCHOOL

PERMANENT EMERGENCY GENERATOR

SCHOOL SITE PLAN

LJA Engineering & Surveying, Inc.
2929 Briarpark Drive
Suite 600
Houston, Texas 77063
Phone 713-953-5030
Fax 713-953-5031
FIRM # F-1386

LJA PROJECT NO.: 0344-9003E

1/8" = 1'-0"

SHEET NO. ESP-L0 OF

EMERGENCY GENERATOR FOR SANTA FE HIGH SCHOOL - PROJECT NO. 0344-9003E

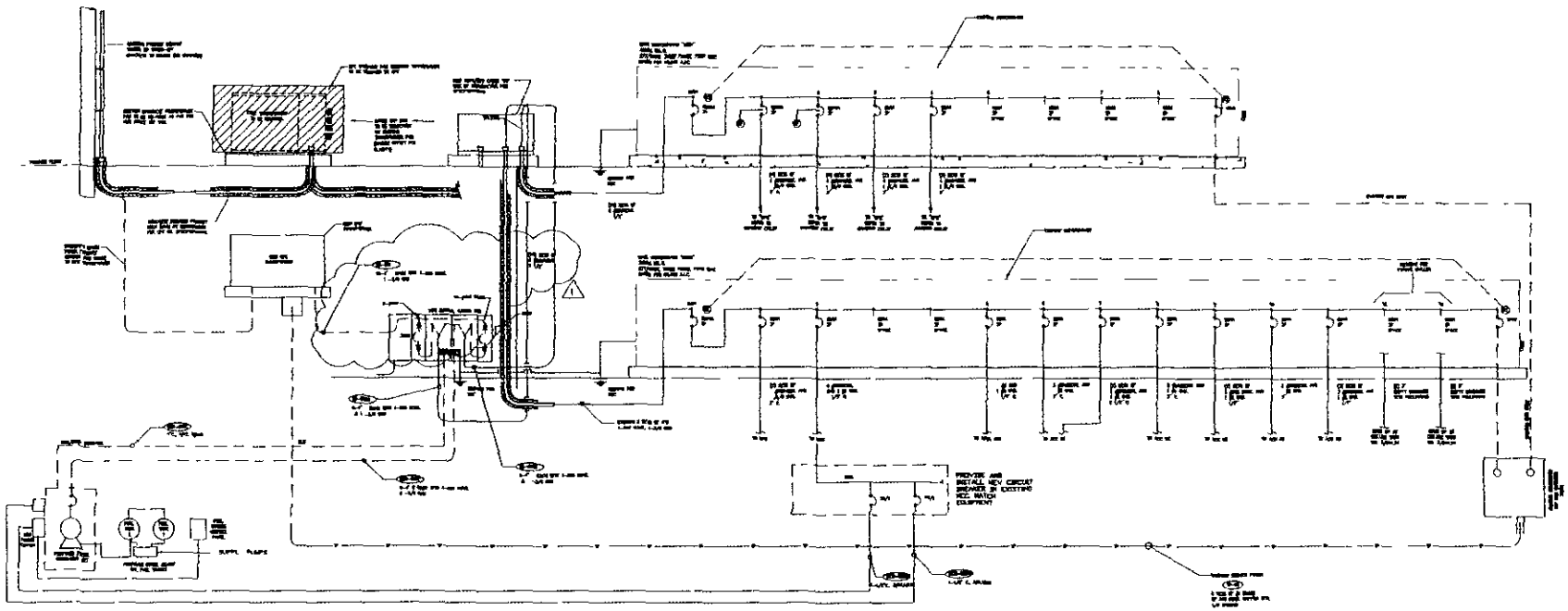

AUDITORIUM ADDITION	KVA
RECEPTACLES	32
LIGHTING	47
MOTORS	12
MISC	81
SOUND SYSTEM	87
THEATRE LIGHTING	18
LARGEST MOTOR	73
ELEC WATER HEAT	16
TOTAL	724 KVA ADDED

CENTRAL PLANT UPGRADED	KVA
CHILLERS/PUMPS	175
MOTORS	66
LARGEST MOTOR	64
MISC	38
CHILLER REMOVAL	1742
CH WATER PUMP REMOVAL	150
TOTAL ADDED	767 KVA ADDED
TOTAL REMOVED	1938 KVA REMOVED
SPARE TOTAL ADDED	229 KVA ADDED

CALCULATIONS	KVAS
EXISTING LE NORTH WING	1969
K DESK	2442
AUDITORIUM ADDED	724
CENTRAL PLANT ADDED	767
CENTRAL PLANT REMOVED	1938
TOTAL CONNECTED	4904 KVA/ 4102 AMPS @ 480 V 3PH, 4W
SERVICE CAPACITY	7000 A

FUEL TANKAGE/CONTAINMENT

PROVIDE AND INSTALL 2-10000 GALLON DIESEL FUEL TANKS (UL2085) SIMILAR TO THOSE SHOWN ON DRAWING ESF1.0 PROVIDE CONTROL EQUIPMENT AND PUMPS AS SHOWN ON PLANS. ~~A CONTAINMENT BERM WITH SUMP DRAIN~~ AND FENCING AS SHOWN IN PLANS. INSTALLATION TO BE PROVIDED BY A FUEL TANK CONTRACTOR AND SHALL BE TURN-KEY INSTALLER TO PROVIDE ALL PERMITS AND COMPLETE ALL FORMS AND REPORTING REQUIREMENTS (INCLUDING SPCC REQUIREMENTS) AS REQUIRED BY TCEQ, EPA, AND OTHER GOVERNING AGENCIES, STATE FIRE MARSHAL, STATE HEALTH DEPARTMENT. PAY ALL ASSOCIATED PERMITS AND FEES.

LIGHTING PROTECTION

PROVIDE AND INSTALL LIGHTNING PROTECTION FOR GENERATOR AND TANKAGE EQUIPMENT AND ASSOCIATED FENCING. TIE INTO EXISTING SFHS LIGHTING PROTECTION SYSTEM IF POSSIBLE. INSTALLATION TO BE CERTIFIED BY STATE OF TEXAS LIGHTNING PROTECTION EQUIPMENT INSTALLER. CONTACT BONDED LIGHTING PROTECTION SYSTEMS, CARROLTON, TX FOR QUOTATION 972-247 1966.

PANEL MIN POWER CENTER
CU BUS
10 KAIC FULLY RATED

120/208V 1PH 3W
60A MCB 100A BUS

SURFACE MOUNT
NEMA 3R
NEUTRAL-GND BUS

NO	DESCRIPTION	LOAD	WIRE	OCP	NO	DESCRIPTION	LOAD	WIRE	OCP
1	ALTER HTR	500	12	20	2	SPACE			
3	BATTERY CHGR	500	12	20	4	SPACE			
5	FUEL SYSTEM	2400	8	40/2	6	SPACE			
7	-	-	8	20	8	SPACE			
9	SPACE				10	SPACE			
11	SPACE				12	SPACE			
		3400					0		

AMPACITY REQ'D=3400 208 x 125= 210 AMPS

GENERATOR MINI-POWER CENTER PANEL SCHEDULE

SCALE: NTS

~~DESIGNED~~

NOTES:

1. CONTRACTOR SHALL CONTACT CPE UNDERGROUND ENGINEER, FRANK DE LEON 713-207-4941 AND ARRANGE A PRE-CONSTRUCTION MEETING PRIOR TO DOING ANY WORK OR PURCHASING ANY MATERIALS.
2. ~~GENERATOR IS TO BE PRE-PURCHASED BY OWNER (SFISD) INSTALLED BY CONTRACTOR~~
3. SEE CONSTRUCTION SEQUENCE SHEET E2.0.
4. KIRK-KEY ARRANGEMENT SHOWN IS EXISTING. MAIN BREAKERS IN BOTH 'MSB1 AND 'MSB2' WILL BE TAKEN OUT OF SERVICE VIA 'KIRK KEYS' AND SWITCHBOARDS ARE TO BE BACK FED VIA EXISTING OUTDOOR GENERATOR/ROLL UP TAP BOX AND TEMPORARY 'DLO' (DIESEL LOCOMOTIVE) CABLE FIELD ROUTED FROM SECONDARY OF NEW PADMOUNT TRANSFORMER.
5. SPLICE TO EXISTING CONDUCTORS ASSOCIATED WITH SWITCHBOARD
6. ALL UNDERGROUND CONDUIT TO BE ENCASED IN CONCRETE, BOTH PRIMARY AND SECONDARY IN ACCORDANCE WITH CNP CONSTRUCTION STANDARDS. AT THE SERVICE ENTRANCE (MAIN DEVICES) PROVIDE SCHEDULE 40 PVC PIPE WITH LOCAL BLUE STEEL ELBOWS IN CONCRETE SIMILAR TO THE CNP CONSTRUCTION STANDARDS.

James E Thompson

DATE	REVISION	BY

SANTA FE HIGH SCHOOL

PERMANENT EMERGENCY GENERATOR

ONE LINE DIAGRAM

L.J.A. Engineering & Surveying, Inc.

L.J.A. PROJECT NO. 0364-9002E

DATE APR. 2011

SCALE

E-2

SHEET NO. OF

EMERGENCY GENERATOR FOR SANTA FE HIGH SCHOOL - PROJECT NO. 0364-9002E

THE COUNTY OF GALVESTON

RUFUS G. CROWDER, CPPB
PURCHASING AGENT

GWEN MCLAREN, CPPB
ASST. PURCHASING AGENT

COUNTY COURTHOUSE
722 Moody (21st Street)
Fifth (5th) Floor
GALVESTON, TEXAS 77550
(409) 770-5371

November 4, 2011

RE: ADDENDUM #7
Bid #B111056 – CDBG Round 1 Santa Fe High School Generator
LJA Project No. 0384-9003E

To All Prospective Bidders,

The following information is being provided to aid in preparation of your bid submittal(s)

OPENING DATE:
Bid #B111056 – CDBG Round 1 Santa Fe High School Generator - LJA Project No. 0384-9003E originally scheduled to be opened on Tuesday, November 8, 2011 at 2:00 p.m. has been re-scheduled. The new deadline for submitting bids is as follows:

Date: Tuesday, November 22, 2011
Time: 2:30 p.m.

Please send Bid submittals to:
Galveston County Purchasing Agent
Attention: Rufus Crowder, CPPB
722 Moody (21st Street), Fifth (5th) Floor
Galveston, Texas 77550

If you have any further questions regarding this bid, please address them to Rufus G. Crowder, CPPB, Purchasing Agent, via e-mail at rufus.crowder@co.galveston.tx.us, or contact the Purchasing Department at (409) 770-5371.

Please excuse us for any inconvenience that this may have caused.

Sincerely,

Gwen McLaren, CPPB

Gwen McLaren, CPPB
Assistant Purchasing Agent
Galveston County

THE COUNTY OF GALVESTON

RUFUS G CROWDER, CPPB
PURCHASING AGENT

GWEN MCLAREN, CPPB
ASST PURCHASING AGENT

COUNTY COURTHOUSE
722 Moody (21st Street)
Fifth (5th) Floor
GALVESTON, TEXAS 77550
(409) 770-5371

November 17 2011

RE: ADDENDUM #8
Bid #B111056 – CDBG Round 1 Santa Fe High School Generator
LJA Project No. 0384-9003E

To All Prospective Bidders,

The following information is being provided to aid in preparation of your bid submittal(s)

As a reminder, the bid is scheduled to be opened on the following date

Date: Tuesday, November 22, 2011
Time: 2:30 p.m.

Please send Bid submittals to
Galveston County Purchasing Agent
Attention: Rufus Crowder, CPPB
722 Moody (21st Street), Fifth (5th) Floor
Galveston, Texas 77550

If you have any further questions regarding this bid, please address them to Rufus G Crowder, CPPB, Purchasing Agent, via e-mail at rufus crowder@co galveston tx us, or contact the Purchasing Department at (409) 770-5371

Please excuse us for any inconvenience that this may have caused

Sincerely,

Gwen McLaren, CPPB

Gwen McLaren, CPPB
Assistant Purchasing Agent
Galveston County

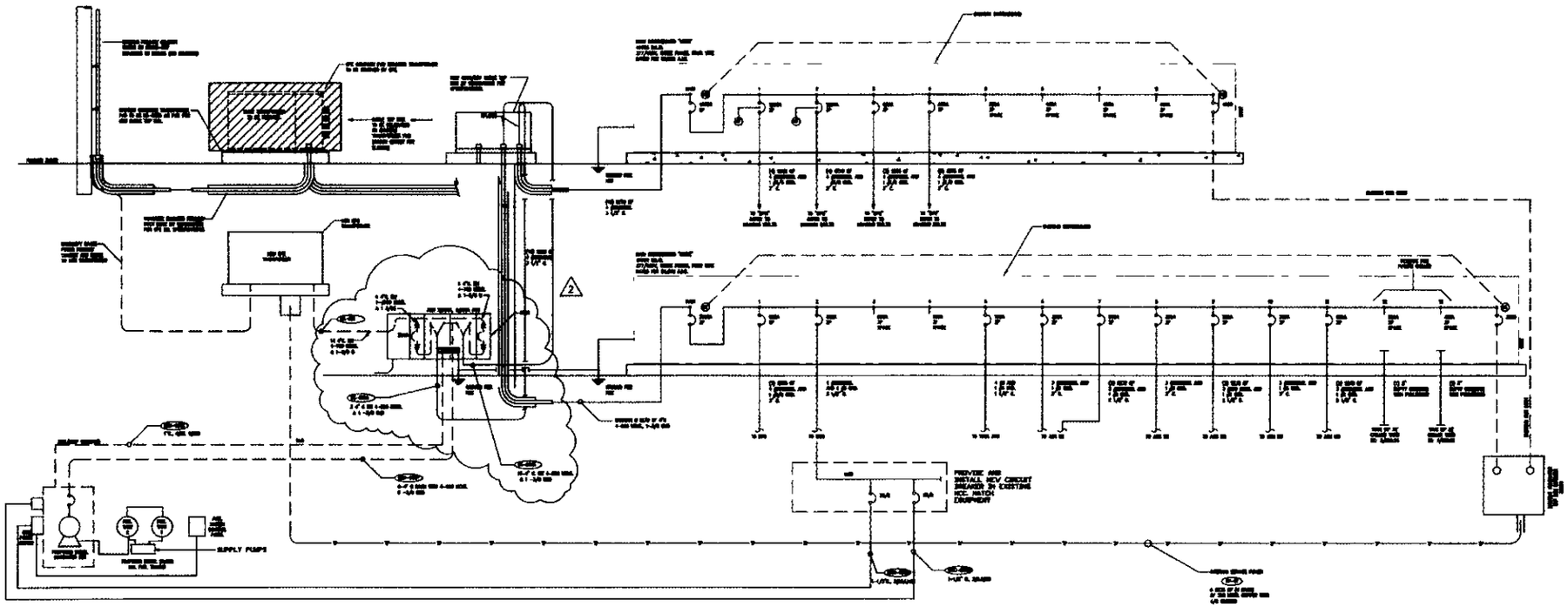

AUDITORIUM ADDITION	KVA	
RECEPTACLES	38	
LIGHTING	45	
MOTORS	124	
MISC	25	
SOUND SYSTEM	27	
THEATRE LIGHTING	48	
LAMBERT MOTOR	23	
ELEC WATER HEAT	18	
TOTAL	724 KVA ADDED	

CENTRAL PLANT UPGRADED	KVA
CHILLERS/PUMPS	379
MOTORS	66
LAMBERT MOTOR	64
MISC	38
CHILLER REMOVAL	(474)
CH WATER PUMP REMOVAL	(54)
TOTAL ADDED	767 KVA ADDED
TOTAL REMOVED	528 KVA REMOVED
GRAND TOTAL ADDED	239 KVA ADDED

CALCULATIONS	KVAE
EXISTING 12 MONTH PEAK	1969
X 125%	2463
AUDITORIUM (ADDED)	724
CENTRAL PLANT (ADDED)	767
CENTRAL PLANT (REMOVED)	528
TOTAL CONNECTED	3426 KVA/ 4283 AMPS @ 480 V 3PH, 4W
SERVICE AMPACITY	7000 A

FUEL TANKAGE/CONTAINMENT

PROVIDE AND INSTALL 2-10000 GALLON DIESEL FUEL TANKS (UL2085) SIMILAR TO THOSE SHOWN ON DRAWING ESP1.0. PROVIDE CONTROL EQUIPMENT AND PUMPS AS SHOWN ON PLANS. A CONTAINMENT BERM WITH SUMP DRAIN, AND FENCING AS SHOWN IN PLANS. INSTALLATION TO BE PROVIDED BY A FUEL TANK CONTRACTOR AND SHALL BE TURN-KEY INSTALLER TO PROVIDE ALL PERMITS AND COMPLETE ALL FORMS AND REPORTING REQUIREMENTS (INCLUDING SPCC REQUIREMENTS) AS REQUIRED BY TCEQ, EPA, AND OTHER GOVERNING AGENCIES, STATE FIRE MARSHAL, STATE HEALTH DEPARTMENT. PAY ALL ASSOCIATED PERMITS AND FEES.

LIGHTING PROTECTION

PROVIDE AND INSTALL LIGHTNING PROTECTION FOR GENERATOR AND TANKAGE EQUIPMENT AND ASSOCIATED FENCING. TIE INTO EXISTING SFHS LIGHTING PROTECTION SYSTEM IF POSSIBLE. INSTALLATION TO BE CERTIFIED BY STATE OF TEXAS LIGHTNING PROTECTION EQUIPMENT INSTALLER. CONTACT BONDED LIGHTING PROTECTION SYSTEMS, CARROLTON, TX FOR QUOTATION, 972-247-1988.

1

PANEL MIN POWER CENTER
CU BUS
0 KAIC FULLY RATED

120/208V 1PH 3W
60A MCB 100A BUS

SURFACE MOUNT
NEMA 3R
NEUTRAL+GND BUS

NO.	DESCRIPTION	LOAD	WIRE	OCP	NO	DESCRIPTION	LOAD	WIRE	OCP
1	ALTER HTR	500	12	20	2	SPACE			
3	BATTERY CHGR	500	12	20	4	SPACE			
5	FUEL SYSTEM	2500	8	40/2	6	SPACE			
7	-	-	8	2P	8	SPACE			
9	SPACE				10	SPACE			
11	SPACE				12	SPACE			
		3500					0		

AMPACITY REQ'D=3500/208 X 125% 210 AMPS

GENERATOR MINI-POWER CENTER PANEL SCHEDULE

SCALE: NTS

NOTES:

1. CONTRACTOR SHALL CONTACT CPE UNDERGROUND ENGINEER, FRANK DE LEON, 713-207-4841 AND ARRANGE A PRE-CONSTRUCTION MEETING PRIOR TO DOING ANY WORK OR PURCHASING ANY MATERIALS.
2. GENERATOR IS TO BE PRE-PURCHASED BY OWNER (SFISD), INSTALLED BY CONTRACTOR.
3. SEE CONSTRUCTION SEQUENCE SHEET E2.0.
4. KIRK-KEY ARRANGEMENT SHOWN IS EXISTING. MAIN BREAKERS IN BOTH "MSB1 AND "MSB2" WILL BE TAKEN OUT OF SERVICE VIA "KIRK KEYS" AND SWITCHBOARDS ARE TO BE BACK FED VIA EXISTING OUTDOOR GENERATOR/ROLL-UP TAP BOX AND TEMPORARY "DLO" (DIESEL LOCOMOTIVE) CABLE FIELD ROUTED FROM SECONDARY OF NEW PADMOUNT TRANSFORMER.
5. SPLICE TO EXISTING CONDUCTORS ASSOCIATED WITH SWITCHBOARD.
6. ALL UNDERGROUND CONDUIT TO BE ENCASED IN CONCRETE, BOTH PRIMARY AND SECONDARY IN ACCORDANCE WITH CNP CONSTRUCTION STANDARDS. AT THE SERVICE ENTRANCE (MAIN DEVICES), PROVIDE SCHEDULE 40 PVC PIPE WITH OCAL BLUE STEEL ELBOWS IN CONCRETE SIMILAR TO THE CNP CONSTRUCTION STANDARDS.

STATE OF TEXAS
JAMES E. THOMPSON, JR.
73370
REGISTERED
PROFESSIONAL ENGINEER
11-14-11

James E Thompson
James E. Thompson & Associates
ASCE Consulting Engineers
1188 Cypress Road 1066
Alvin Texas 77511
TBPE FIRM F-1388

ADDENDUM NO 8

DATE	REVISION	BY

SANTA FE HIGH SCHOOL

PERMANENT EMERGENCY GENERATOR

ONE LINE DIAGRAM

L.A. Engineering & Surveying, Inc.
Alvin Texas 77511
Phone 713-[illegible]
Fax 713-[illegible]
TBPE-F-[illegible]

L.A. PROJECT NO.: 0384-0003E

DRAWN: [illegible] DATE: [illegible]

SCALE: NTS

E-2

SHEET NO. OF

EMERGENCY GENERATOR FOR SANTA FE HIGH SCHOOL - PROJECT NO. 0384-0003E

COUNTY OF GALVESTON

SPECIFICATIONS AND CONTRACT DOCUMENTS

SANTA FE HIGH SCHOOL GENERATOR

LJA PROJECT NO. 0384-9003E

TABLE OF CONTENTS

I	INVITATION TO BID
II	GENERAL PROVISIONS
III	VENDOR QUALIFICATION PACKET
IV-A	INSTRUCTION TO BIDDERS
IV-B	TXCDBG - INSTRUCTIONS TO BIDDERS FOR CONSTRUCTION
V	BID PROPOSAL
VI	CONTRACT AWARD
VII	TXCDBG - TERMS AND CONDITIONS
VIII	TEXAS WORKERS' COMPENSATION
IX	SPECIAL TERMS AND CONDITIONS
X	GENERAL TERMS AND CONDITIONS
XI	TXCDBG - GENERAL CONTRACT CONDITIONS FOR CONSTRUCTION
XII	FEDERAL LABOR STANDARD PROVISIONS
XIII	TXCDBG –CONTRACTOR'S LOCAL OPPORTUNITY PLAN AND PROPOSED CONTRACTOR'S BREAKDOWN
XIV	TXCDBG – ATTORNEY'S REVIEW CERTIFICATION

XV TXCDBG - CERTIFICATION OF SECTION 3

XVI COPELAND ACT AND CERTIFICATION REGARDING LOBBYING

XVII TXCDBG - STATEMENT OF BIDDER'S QUALIFICATIONS, CONTRACTOR CERTIFICATION AND SECTION 504 CERTIFICATION

XVIII TXCDBG - NONCOLLUSION AFFIDAVIT OF PRIME BIDDER

XIX PROJECT SIGN

XX ACKNOWLEDGEMENT AND CERTIFICATION REGARDING DEBARMENT, SUSPENSION, AND OTHER INELGIBILITY

XXI EMPLOYMENT VERIFICATIONS

XXII TECHNICAL SPECIFICATIONS

I

INVITATION TO BID

BID #. B111056
OPEN. 10/11/2011
2 00 PM

INVITATION TO BID
CDBG ROUND 1 SANTA FE HIGH SCHOOL GENERATOR
GALVESTON COUNTY, TEXAS

The County of Galveston solicits bids on the following project funded through the Texas General Land Office, contract number 10-5052-000-5028 Hurricane Ike disaster recovery program funds

Contract to furnish labor, equipment, materials and incidentals as required for
Bid #B111056, CDBG Round 1 Santa Fe High School Generator

Davis-Bacon rates will apply under this disaster recovery program

Sealed bids in **sets of seven, (one (1) original and six (6) copies)** will be received in the office of the County Purchasing Agent, until **2:00 PM** on **10/11/2011** and opened immediately in that office in the presence of the County Auditor and the Purchasing Agent. **Bidders are specifically advised that any bid delivered after this time will be returned unopened.**

Submitted bids will be publicly opened on **10/11/2011 at 2·00 PM** in the Purchasing Agent's office located in the Galveston County Courthouse, 722 Moody Avenue (21st St), Fifth (5th) Floor, Galveston Texas 77550

All bids must be marked on the outside of the envelope
Bid #B111056, CDBG Round 1 Santa Fe High School Generator

A non-mandatory pre-bid conference will be held on Monday, September 26, 2011 at 10·00 a.m. in the Galveston County Purchasing Department located in the Galveston County Courthouse, 722 Moody Avenue (21st St), Fifth (5th) Floor, Galveston, Texas 77550.

Bidder's name and return address should be on the outside of the envelope

Plans and specifications may be obtained from the office of LJA Engineering, Inc , 11821 East Freeway, Suite 400, Houston Texas 77029, (713) 450-1300

A $50 00 non-refundable deposit shall be required for each set of plans and specifications Bids will be completed on the forms and proposal sheets provided

Each bid must be accompanied by a Certified or Cashier's Check or acceptable Bidder's Bond in the amount of 5% of bid as a guarantee that, if awarded the contract, within sixty (60) days from the date of bid opening, the bidder will enter into a contract and execute Performance and Payment Bonds statutorily required for public works projects. The county intends to award a contract within 60 days.

Commissioners' Court reserves the right to waive any informality and to reject any and all bids, and to accept bid or bids which, in its opinion, is most advantageous to the County

Rufus G Crowder, CPPB
Purchasing Agent
Galveston County

II

GENERAL PROVISIONS

GENERAL PROVISIONS
CDBG ROUND 1 SANTA FE HIGH SCHOOL GENERATOR
GALVESTON COUNTY, TEXAS

1 BID PACKAGE

The invitation to bid, general and special provisions, drawings, specifications/line item details, contract documents and the bid sheet are all considered part of this bid package Bids must be submitted in ***sets of seven (7), one (1) original and six (6) copies****, on the forms provided by the County, including the bid sheet completed in its entirety and signed by an authorized representative by original signature Failure to complete and sign the bid sheet/contract page(s) may disqualify the bid from being considered by Commissioners' Court Any individual signing on behalf of the bidder expressly affirms that he or she is duly authorized to tender this bid and to sign the bid sheet/contract under the terms and conditions in this bid Bidder further understands that the signing of the contract shall be of no effect unless subsequently awarded and the contract properly executed by Commissioners' Court All figures must be written in ink or typed Figures written in pencil or with erasures are not acceptable However, mistakes may be crossed out, corrections inserted, and initialed in ink by the individual signing the bid If there are discrepancies between unit prices quoted and extensions, the unit price will prevail Each bidder is required to thoroughly review this entire bid packet to familiarize themselves with the bid procedures, the plans and specifications for the requested work as well as the terms, and conditions of the contract the successful bidder will execute with the County*

2 COMPETITIVENESS AND INTEGRITY

To prevent biased evaluations and to preserve the competitiveness and integrity of such acquisition efforts bidders are to direct all communications regarding this bid to the Galveston County Purchasing Agent, unless otherwise specifically noted

Do not contact the requesting department Attempts by offering firms to circumvent this requirement will be viewed negatively and may result in rejection of the offer of the firm found to be in non-compliance

All questions regarding this Invitation to Bid must be submitted in writing to

Rufus G. Crowder, CPPB
Galveston County Purchasing Agent
722 Moody, Fifth (5th) Floor
Galveston, Texas 77550
Fax: (409) 621-7987
E-mail: rufus crowder@co.galveston.tx us

An authorized person from the submitting firm must sign all bids This signature acknowledges that the bidder has read the bid documents thoroughly before submitting a bid and will fulfill the obligations in accordance to the terms conditions, and specifications

Please carefully review this Invitation to Bid It provides specific information necessary to aid participating firms in formulating a thorough response

3 TIME FOR RECEIVING BIDS

Bids received prior to the submission deadline will be maintained unopened until the specified time for opening If the bidder fails to identify the Bid Number on the outside of the envelope as required the Purchasing Agent will open the envelope for the sole purpose of identifying the bid number for which the submission was made The envelope will then be resealed No liability will attach to a County office or employee for the premature opening of a bid If you do not submit a bid return this Invitation to Bid and state reason, otherwise your name may be removed from our mailing list

4 BID OPENING

The names of the bidders and the pricing will be read aloud at the bid opening Sealed bids will be received in the office of the County Purchasing Agent and opened immediately in that office in the presence of the County Auditor and the Purchasing Agent No bid may be withdrawn for a period of sixty (60) calendar days of the bid opening date

GENERAL PROVISIONS
CDBG ROUND 1 SANTA FE HIGH SCHOOL GENERATOR
GALVESTON COUNTY, TEXAS

5 **REJECTION OF BIDS**
The County, acting through its Commissioners Court reserves the right to (1) reject any and all bids and waive any informality in the bids received, (2) disregard the bid of any bidder determined to be non responsive to the provisions contained herein

6 **RESTRICTIVE OR AMBIGUOUS SPECIFICATIONS**
It is the responsibility of the prospective bidder to review the entire invitation to bid packet and to notify the Purchasing Department if the specifications are formulated in a manner that would restrict competition or appear ambiguous Any such protest or question(s) regarding the specifications or bid procedures must be received in the Purchasing Department not less than seventy-two (72) hours prior to the time set for bid opening Vendors are to bid as specified herein or bid an approved equal The mention of any brand name in the specifications is not intended to be restrictive, but is intended to describe the general features and requirements (or equivalent) that Galveston County is seeking

7. **SUBSTITUTES**
It is not the County s intent to discriminate against any materials of equal merit to those specified however, no substitutions are allowed for this bid unless specific instructions are included in the Special Provision section that allow alternate substitutions Should the bidder desire to use any substitutions, prior written approval shall be obtained from the County Purchasing Agent sufficiently in advance in order that an addendum might be issued

8. **EXCEPTIONS TO BID**
No exceptions to this bid are allowed unless specific instructions are included in the Special Provision section that allow exceptions to the bid conditions Otherwise, Bidders must adhere to the specifications when completing their submittals

9. **PRICING**
Bids will be either lump sum or unit prices as shown on the bid sheet The net price will be delivered to Galveston County including all freight or shipping charges The County is tax exempt and no taxes should be included in your bid

Cash discount must be shown on bid, otherwise prices will be considered net Unless prices and all information requested are complete, bid may be disregarded and given no consideration

In case of default by the contractor, the County of Galveston may procure the articles or services from other sources and may deduct from any monies due, or that may thereafter become due to the contractor, the difference between the price named in the contract of purchase order and the actual cost thereof to the County of Galveston Prices paid by the County of Galveston shall be considered the prevailing market price at the time such purchase is made Periods or performance may be extended if the facts as to the cause of delay justify such extension in the opinion of the Purchasing Agent and the Commissioners' Court

10. **PROCUREMENT CARD PROGRAM**
The County of Galveston participates in a Procurement Card (P-Card) program that allows payments made to the vendor by credit card This method normally results in substantially faster bill payments sometimes within three (3) to five (5) days of the actual transaction date If your company will accept payment via credit card (Visa, MasterCard), please notate this in you bid submittal

11. **TAX EXEMPTION**
Any resultant purchase orders are issued by a political subdivision of the State of Texas which qualifies for exemption from sales, excise, and use taxes pursuant to sections 151 309 – 151 311, of the Texas Tax Code The contractor performing this contract may purchase all materials, and supplies, used or consumed in the performance of this contract by issuing to his supplier an exemption certificate complying with State Comptroller's Ruling #95-9307 in lieu of tax Any such exemption certificate issued by the Contractor in lieu of tax shall be subject to the provisions of the State Comptroller's ruling #95 05 (effective October 2, 1968) or as hereafter amended As a general rule a vendor is not required to pay state sales tax on goods purchased that are totally incorporated into or consumed by the public improvements Certificates may be issued upon request

GENERAL PROVISIONS
CDBG ROUND 1 SANTA FE HIGH SCHOOL GENERATOR
GALVESTON COUNTY, TEXAS

12. PASS THROUGH COST ADJUSTMENTS

Except in instances of extreme extenuating circumstances Vendor prices shall remain firm throughout the Contract period and any renewals Examples of extreme extenuating circumstances include such situations as a nationwide rail strike, oil shortage, or oil embargos

In extreme extenuating circumstances Vendors may be allowed to temporarily "pass through" additional costs they are forced to incur through no fault of their own A request for a pass through cost increase will not be considered unless a Vendor's cost for his product exceeds 10% over the original cost for the product Also, the increase in cost must be nationwide and consistent for a minimum period of sixty (60) days If a Vendor thinks he will be asking for a pass through cost adjustment during the term of his contract the original cost of his product to him must be stated in Vendor's original bid

A request for a pass through cost does not guarantee that one will be granted Vendors must submit such information on each request as is required by the County Purchasing Agent The County Purchasing Agent will review each request on a case by case basis and determine the appropriateness of each request as well as amount and duration of increase Vendors will not be permitted any additional compensation for mark-ups or profits based on the increase in price Rather, such additional compensation will be limited to the actual increase in original cost to the Vendor as such increase is reflected by the original cost stated in the bid But in no event will the amount of additional compensation exceed 25% increase in

Vendor's original cost for his product as such cost is reflected in Vendor's original bid or the duration exceed a period of sixty (60) days In addition, should, during the period of the pass through, cost return to normal or decrease to below pre pass through prices appropriate downward adjustments will be made No more than one pass through adjustment will be permitted per year

13. MODIFICATION OF BIDS

A bidder may modify a bid by letter at any time prior to the submission deadline for receipt of bids Modification requests must be received prior to the submission deadline Modifications made before opening time must be initialed by bidder guaranteeing authenticity Bids may not be amended or altered after the official opening with the single exception that any product literature and/or supporting data required by the actual specifications, if any, will be accepted at any time prior to the Commissioners' Court consideration of same

14. AWARD OF BIDS

The award will be made to the bidder who is determined to be the lowest bidder demonstrating the best value and ability to fulfill the requirements of the bid The prices proposed will be considered firm and cannot be altered after the submission deadline

The criteria utilized for determining responsibility of bidder(s) includes, but is not limited to, the bidder's experience, skill, ability, business judgment, financial capacity, integrity, honesty possession of the necessary facilities or equipment, previous performance, reputation, promptness, and any other factor deemed relevant by the County The bidder shall furnish any information requested by the County in order for the County to determine whether a bidder is responsible

In determining and evaluating the best bid, the pricing may not necessarily be controlling, but quality, equality, efficiency, utility, general terms, delivery, suitability of the service offered, and the reputation of the service in general use will also be considered with any other relevant items The Commissioners' Court shall be the sole judge in the determination of these matters

Each bidder, by submitting a bid, agrees that if their bid is accepted by the Commissioners' Court, such bidder will furnish all items and services upon which prices have been tendered and upon the terms and conditions in this bid and contract

GENERAL PROVISIONS
CDBG ROUND 1 SANTA FE HIGH SCHOOL GENERATOR
GALVESTON COUNTY, TEXAS

The contractor shall commence work only after the transmittal of a fully executed purchase order, or contract, and after receiving written notification to proceed from Galveston County The contractor will perform all services indicated in the bid in compliance with this contract

Neither department heads nor elected officials are authorized to sign any binding contracts or agreements prior to being properly placed on the Commissioners' Court agenda and approved in open court Department heads and other elected officials are not authorized to enter into any type of agreement or contract on behalf of Galveston County Only the Commissioners Court, acting as a body, may enter into a contract on behalf of Galveston County Additionally, department heads and other elected officials are not authorized to agree to any type of supplemental agreements or contracts for goods or services Supplemental agreements are subject to review by the Galveston County Legal Department prior to being signed by the County's authorized representative

The County of Galveston reserves the right to accept bids on individual items listed, or group items, or on the bid as a whole to reject any and all bids, to waive any informality in the bids, and to accept the bid that appears to be in the best interest of the County

Notice of contract award will be made within ninety (90) days of opening of bids to the lowest responsive and responsible contractor, whose bid complies with all the requirements in this Invitation to Bid unless special consideration is granted by the Commissioners' Court

Contractor shall submit to the County, for approval, within ten (10) days from notice of contract award, all Certificates of Insurance evidencing the required coverage as described under insurance in the schedule of the Invitation to Bid item 29 page 7 Proof of Insurance

The contractor shall not commence work under these terms and conditions of the contract until all applicable Certificates of Insurance Performance and Payment Bonds, and Irrevocable Letter of Credit (if required) have been approved by the County of Galveston and he/she has received notice to proceed in writing and an executed copy of the contract from the County of Galveston Purchasing Agent

15. RESULTANT CONTRACT

The resultant contract if applicable, shall become effective upon the Commissioners' Court execution of the same The contract documents shall consist of the contract, the general and special provisions the drawings bid package, any addenda issued, and any change orders issued during the work If applicable to the attached bid bidder must sign three (3) original contracts and return with their bid submittal

16 CONTRACT TERM

The term of the resultant contract will begin on the date of execution by the Commissioners Court and will terminate on the date specified in the resultant contract unless terminated earlier as herein set forth

17 TERMINATION FOR DEFAULT

Failure of either party in the performance of any of the provisions of this contract shall constitute a breach of contract in which case, either party may require corrective action within ten (10) days from date of receipt of written notice citing the exact nature of such breach Failure of the party being notified to take corrective action within the prescribed ten (10) days, or failure to provide written reply of why no breach has occurred shall constitute a Default of Contract

All notices relating to default by Bidder of the provisions of the contract shall be issued by County by its Legal Department, and all replies shall be made in writing to the Galveston County Legal Department Notices issued by or issued to anyone other than the Galveston County Legal Department shall be null and void and shall be considered as not having been issued or received

GENERAL PROVISIONS
CDBG ROUND 1 SANTA FE HIGH SCHOOL GENERATOR
GALVESTON COUNTY, TEXAS

Galveston County reserves the right to enforce the performance of this contract in any manner prescribed by law in the event of breach or default of this contract, and may contract with another party, with or without solicitation of bids or bids or further negotiations At a minimum, bidder shall be required to pay any difference in service or materials should it become necessary to contract with another source plus reasonable administrative costs and attorney fees

In the event of Termination for Default, Galveston County, its agents or representatives shall not be liable for loss of any profits anticipated to be made by bidder

No waiver by either party of any event of default under this agreement shall operate as a waiver of any subsequent default under the terms of this agreement

County reserves the right to terminate this contract immediately in the event bidder

- Fails to meet delivery or completion schedules,
- Fails to otherwise perform in accordance with the accepted bid and the contract

18. TERMINATION FOR CONVENIENCE

County may terminate this contract upon at least thirty (30) days prior written notice for its convenience or for any reason deemed by the County to serve the public interest County may terminate this contract upon thirty (30) days prior written notice for any reason resulting from any governmental law, order, ordinance, regulations, or court order In no event shall County be liable for loss of any profits anticipated to be made hereunder by bidder should this contract be terminated early

19. FORCE MAJEURE

If by reason of Force Majeure either Party shall be rendered unable, wholly or in part, to carry out its responsibilities under this contract by any occurrence by reason of Force Majeure, then the Party unable to carry out its responsibility shall give the other Party notice and full particulars of such Force Majeure in writing within a reasonable time after the occurrence of the event and such notice shall suspend the Party's responsibility for the continuance of the Forced Majeure claimed, but for no longer period

Force Majeure means acts of God, floods, hurricanes, tropical storms tornadoes, earthquakes, or other natural disasters, acts of a public enemy, acts of terrorism sovereign conduct, riots, civil commotion, strikes or lockouts, and other causes that are not occasioned by either Party's conduct which by the exercise of due diligence the Party is unable to overcome and which substantially interferes with operations

20 ESTIMATED QUANTITIES

Any reference to quantities shown in the Invitation to Bid are an estimate only Since the exact quantities cannot be predetermined, the County reserves the right to adjust quantities as deemed necessary to meet its' requirements

21 CONTRACTOR INVESTIGATION

Before submitting a bid, each contractor shall make all investigations and examinations necessary to ascertain all site conditions and requirements affecting the full performance of the contract and to verify any representations made by the County upon which the contractor will rely If the contractor receives an award as a result of its bid submission, failure to have made such investigations and examinations will in no way relieve the contractor from its obligation to comply in every detail with all provisions and requirements of the contract, nor will a plea of ignorance of such conditions and requirements be accepted as a basis for any claim whatsoever by the contractor for additional compensation

22. NO COMMITMENT BY COUNTY OF GALVESTON

This Invitation to Bid does not commit the County of Galveston to award any costs or pay any costs, or to award any contract, or to pay any costs associated with or incurred in the preparation of a bid to this request, or to procure or contract for services or supplies

GENERAL PROVISIONS
CDBG ROUND 1 SANTA FE HIGH SCHOOL GENERATOR
GALVESTON COUNTY, TEXAS

23. SINGLE BID RESPONSE

If only one bid is received in response to the Invitation to Bid, a detailed cost bid may be requested of the single contractor A cost/price analysis and evaluation and/or audit may be performed of the cost bid in order to determine if the price is fair and reasonable

24. REJECTION/DISQUALIFICATION OF BIDS

Galveston County reserves the right to reject any or all bids in whole or in part received by reason of this bid package and may discontinue its efforts for any reason under this bid package at any time prior to actual execution of the contract by the County Bidders may be disqualified and rejection of bids may be recommended to the Commissioners' Court for any of (but not limited to) the following causes

A Failure to use the bid form(s) furnished by the County, if applicable
B Lack of signature by an authorized representative that can legally bind the company on the bid form
C Failure to properly complete the bid
D Bids that do not meet the mandatory requirements
E Evidence of collusion among bidders

25. CHANGES IN SPECIFICATIONS

If it becomes necessary to revise any part of this bid, a written notice of such revision will be provided to all bidders in the form of addenda The County is not bound by any oral representations, clarifications, or changes made in the written specifications by the County's employees unless such clarification or change is provided to bidders in a written addendum from the Purchasing Agent

The County of Galveston reserves the right to revise or amend the specifications up to the time set for opening of bids Such revisions and amendments, if any, shall be announced by amendments to the solicitation Copies of such amendments shall be furnished to all prospective contractors Prospective contractors are defined as those contractors listed on the County s Invitation to Bid list for this material/service or who have obtained his documents subsequent to the advertisement If revisions and amendments require changes in quantities or prices proposed, or both, the date set for opening of bids may be postponed by such number of days as in the opinion of the County shall enable contractors to revise their bids In any case, the bid opening shall be at least five working days after the last amendment, and the amendment shall include an announcement of the new date if applicable, for the opening of bids

26. BID DISCLOSURES

The names of those who submitted bids will not be made public information until after an award is made by Commissioners' Court No price or staffing information will be released Bidders are requested to withhold all inquiries regarding their bid or other submissions until after an award is made No communication is to be had with any County employee, other than the Purchasing Agent, regarding whether a bid was received Violations of this provision may result in the rejection of a bid

27 PROTEST

Any actual or prospective bidder who is allegedly aggrieved in connection with the solicitation or award of bid may protest The protest will be submitted in writing to the Purchasing Agent within seven (7) days after such aggrieved person knows of, or should have known of the facts giving rise thereto If the protest is not resolved by mutual agreement, the Purchasing Agent will promptly issue a decision in writing to the protestant If the protestant wishes to appeal the decision rendered by the Purchasing Agent, such appeal must be made to the Commissioners Court through the Purchasing Agent The decision of the Court will be final The Court need not consider protests unless this procedure is followed

28 WITHDRAWAL OF BID

Bidders may request withdrawal of a sealed bid prior to the scheduled bid opening time provided the request for withdrawal is submitted to the Purchasing Agent in writing No bids may be withdrawn for a period of sixty (60) calendar days after opening of the bids

GENERAL PROVISIONS
CDBG ROUND 1 SANTA FE HIGH SCHOOL GENERATOR
GALVESTON COUNTY, TEXAS

29 **INDEMNIFICATION**

The contractor shall agree to assume all risks and responsibility for, and agrees to indemnify, defend, and save harmless, the County of Galveston, its elected and appointed officials and department heads, and its agents and employees from and against all claims, demands, suits, actions, recoveries, judgments, and costs and expenses including reasonable attorney's fees for the defense thereof in connection therewith on account of the loss of life, property or injury or damage to the person which shall arise from contractor's operations under this contract, its use of County facilities and/or equipment or from any other breach on the part of the contractor, its employees, agents or any person(s) in or about the County's facilities with the expressed or implied consent of the County Contractor shall pay any judgment with cost which may be obtained against Galveston County resulting from contractor's operations under this contract.

Contractor agrees to indemnify and hold the County harmless from all claims of subcontractors, laborers incurred in the performance of this contract. Contractor shall furnish satisfactory evidence that all obligations of this nature herein above designated have been paid, discharged or waived. If Contractor fails to do so, then the County reserves the right to pay unpaid bills of which County has written notice direct and withhold from Contractor's unpaid compensation a sum of money reasonably sufficient to liquidate any and all such lawful claims

30 **PROOF OF INSURANCE**

Successful bidder agrees to keep in full force and effect, a policy of public liability and property damage insurance issued by a casualty company authorized to do business in the State of Texas, and in standard form approved by the Board of Insurance Commissioners' of the State of Texas, with coverage provision insuring the public from any loss or damage that may arise to any person or property by reason of services rendered by successful bidder and providing that the amount by reason of services limits of not less than the following sums

A For damages arising out of bodily injury to or death of one person in any one accident –
ONE HUNDRED THOUSAND AND NO/100 ($100,000 00) DOLLARS
B For damages arising out of bodily injury to or death of two or more persons in any one accident –
THREE HUNDRED THOUSAND AND NO/100 ($300,000 00) DOLLARS
C For any injury to or destruction of property in any one accident –
ONE HUNDRED THOUSAND AND NO/100 ($100,000 00) DOLLARS

Successful bidder shall carry in full force Workers' Compensation Insurance Policy(ies), if there is more than one employee, for all employees, including but not limited to full time, part time, and emergency employees employed by the successful bidder Current insurance Certificates certifying that such policies as specified above are in full force and effect shall be furnished by successful bidder to the County

Galveston County shall be listed as the additional insured on policy certificates and shall be notified of any changes to the policy during the contractual period.

31 **BID BOND**

Each bidder will be required to furnish with their bid a Cashier's or Certified Check from any bank with in the State of Texas or an acceptable Bidder's Bond for the sum of 5% of the total highest bid payable to the County of Galveston The certified check or bid bond will be returned to the unsuccessful bidder(s) and to the successful bidder on the completion of all contract documents and the furnishing of any necessary payment bonds and insurance certificates

The bid bond or check will be forfeited to the County as liquidated damages should the successful bidder fail to give the required payment and performance bonds and insurance certificates and execute the contract with the said County within thirty (30) days after receiving notice of acceptance of its bid

GENERAL PROVISIONS
CDBG ROUND 1 SANTA FE HIGH SCHOOL GENERATOR
GALVESTON COUNTY, TEXAS

32 PERFORMANCE AND PAYMENT BOND(S)

V T C A , Government Code Chapter 2253, requires a Performance Bond (for contracts in the excess of $100,000) and a Payment Bond (for contracts in excess of $25,000), to be provided by the Contractor Each bond required shall be equal to the total contract price and shall be issued by a satisfactory surety company The bond(s) will remain in full force and effect until final completion and acceptance of the work

The bond(s) are to be made payable to the County of Galveston They shall be written on forms provided by the surety for public works projects in Texas A surety licensed to do business in the state of Texas must execute the bond

Bidders should familiarize themselves with the entire provisions of V T C A , Chapter 2253 and the penalties provided for its violation before submitting their bid

33. CONFLICT OF INTEREST DISCLOSURE REPORTING

Proposer may be required under Chapter 176 of the Texas Local Government Code to complete and file a conflict of interest questionnaire (CIQ Form) If so, the completed CIQ Form must be filed with the County Clerk of Galveston County Texas

If Proposer has an employment or other business relationship with an officer of Galveston County or with a family member of an officer of Galveston County that results in the officer or family member of the officer receiving taxable income that exceeds $2 500 00 during the preceding 12-month period then Proposer **MUST** complete a CIQ Form and file the original of the CIQ Form with the County Clerk of Galveston County

If Proposer has given an officer of Galveston County or a family member of an officer of Galveston County one or more gifts with an aggregate value of more than $250 00 during the preceding 12-months, then Proposer **MUST** complete a CIQ Form and file the original of the CIQ Form with the County Clerk of Galveston County

The Galveston County Clerk has offices at the following locations

Galveston County Clerk
Galveston County Justice Center, Suite 2001
600 59th Street
Galveston, Texas 77551

Galveston County Clerk
North County Annex, 1st Floor
174 Calder Road
League City, Texas 77573

Again if Proposer is required to file a CIQ Form, the original completed form is filed with the Galveston County Clerk (not the Purchasing Agent)

For Proposer's convenience, a blank CIQ Form is enclosed with this proposal Blank CIQ Forms may also be obtained by visiting the Galveston County Clerk's website and/or the Purchasing Agent s website – both of these web sites are linked to the Galveston County homepage at http //www co galveston tx us

As well, blank CIQ Forms may be obtained by visiting the Texas Ethics Commission website, specifically at http //www ethics state tx us/whatsnew/conflict_forms htm

Chapter 176 specifies deadlines for the filing of CIQ Forms (both initial filings and updated filings)

GENERAL PROVISIONS
CDBG ROUND 1 SANTA FE HIGH SCHOOL GENERATOR
GALVESTON COUNTY, TEXAS

It is Proposer's sole responsibility to file a true and complete CIQ Form with the Galveston County Clerk if Proposer is required to file by the requirements of Chapter 176 Proposer is advised that it is an offense to fail to comply with the disclosure reporting requirements dictated under Chapter 176 of the Texas Local Government Code

If you have questions about compliance with Chapter 176, please consult your own legal counsel Compliance is the individual responsibility of each person, business and agent who is subject to Chapter 176 of the Texas Local Government Code

34. ENTIRETY OF AGREEMENT AND MODIFICATION

This contract contains the entire agreement between the parties Any prior agreement, promise, negotiation or representation not expressly set forth in this contract has no force or effect Any subsequent modification to this contract must be in writing, signed by both parties

An official representative, employee, or agent of the County does not have the authority to modify or amend this contract except pursuant to specific authority to do so granted by the Galveston County Commissioners' Court

35. NON-COLLUSIONAFFIDAVIT

The contractor declares by signing and submitting a bid, that the bid is not made in the interest of, or on behalf of, any undisclosed person partnership, company, association, organization or corporation, that the bid is genuine and not collusive or sham, that the contractor has not directly or indirectly induced or solicited another contractor to put in a false or sham bid, and has not directly or indirectly colluded, conspired, connived, or agreed with any contractor or anyone else to put in a sham bid, of that anyone shall refrain from bidding, that the contractor has not in any manner, directly or indirectly sought by agreement, communications, or conference with anyone to fix the bid price of the contractor of any other bidder, or to fix any overhead, profit or cost element of the bid price, or of that of any other contractor, or to secure any advantage against the public body awarding the contract of anyone interested in the proposed contract, that all statements contained in the bid are true and further that the contractor has not directly or indirectly, submitted his or her bid price or any breakdown thereof, or the contents thereof, or divulged information or data relative thereto, or paid, and will not pay, any fee to any cooperation, partnership, company association, organization, bid depository, or to any member or agent thereof to effectuate a collusive or sham bid

No negotiations, decisions, or actions shall be initiated by any company as a result of any result of any verbal discussion with any County employee prior to the opening of responses to this Invitation to Bid

No officer or employee of the County of Galveston, and no other public or elected official, or employee, who may exercise any function or responsibilities in the review or approval of this undertaking shall have any personal or financial interest, direct or indirect, in any contract or negotiation process thereof The above compliance request will be part of all County of Galveston contracts for this service

36. PROCUREMENT ETHICS

Galveston County is committed to the highest ethical standards Therefore, it is a serious breach of the public trust to subvert the public purchasing process by directing purchases to certain favored vendors, or to tamper with the competitive bidding process, whether it's done for kickbacks, friendship or any other reason Since misuse of the purchasing power of a local government carries criminal penalties, and many such misuses are from a lack of clear guidelines about what constitutes an abuse of office, the Code of Ethics outlined below must be strictly followed

Galveston County also requires ethical conduct from those who do business with the county

CODE OF ETHICS – Statement of Purchasing Policy

Public employment is a public trust It is the policy of Galveston County to promote and balance the objective of protecting the County's integrity and the objective of facilitating the recruitment and retention of personnel needed by Galveston County Such policy is implemented by prescribing essential standards of ethical conduct without creating unnecessary obstacles to entering public office

GENERAL PROVISIONS
CDBG ROUND 1 SANTA FE HIGH SCHOOL GENERATOR
GALVESTON COUNTY, TEXAS

Public employees must discharge their duties impartially so as to assure fair competitive access to governmental procurement by responsible contractors Moreover, they should conduct themselves in such a manner as to foster public confidence in the integrity of the Galveston County procurement organization

To achieve this purpose, it is essential that those doing business with Galveston County also observe the ethical standards prescribed herein

General Ethical Standards
It shall be a breach of ethics to attempt to realize personal gain through public employment with Galveston County by any conduct inconsistent with the proper discharge of the employee's duties

It shall be a breach of ethics to attempt to influence any public employee of Galveston County to breach the standards of ethical conduct set forth in this code

It shall be a breach of ethics for any employee of Galveston County to participate directly or indirectly in a procurement when the employee knows that

- The employee or any member of the employee's immediate family has a financial interest pertaining to the procurement
- A business or organization in which the employee, or any member of the employee s immediate family, has a financial interest pertaining to the procurement
- Any other person, business or organization with which the employee or any member of the employee's immediate family is negotiating or has an arrangement concerning prospective employment is involved in the procurement

Gratuities
It shall be a breach of ethics to offer, give or agree to give any employee of Galveston County, or for any employee or former employee of Galveston County to solicit, demand, accept or agree to accept from another person, a gratuity or an offer of employment in connection with any decision, approval, disapproval, recommendation, preparation of any part of a program requirement or purchase request, influencing the content of any specification or procurement standard, rendering of advice, investigation, auditing, or in any other advisory capacity in any program requirement or a contract or subcontract, or to any solicitation or bid therefore pending before this government

Kickbacks
It shall be a breach of ethics for any payment, gratuity or offer of employment to be made by or on behalf of a subcontractor under a contract to the prime contractor or higher tier subcontractor for any contract for Galveston County, or any person associated therewith, as an inducement for the award of a subcontract or order

Contract Clause
The prohibition against gratuities and kickbacks prescribed above shall be conspicuously set forth in every contract and solicitation by Galveston County

Confidential Information
It shall be a breach of ethics for any employee or former employee of Galveston County to knowingly use confidential information for actual or anticipated personal gain, or for the actual or anticipated gain of any person

37 **OPEN RECORDS**
Galveston County is required to adhere to the provisions of the Texas Public Information Act All information, documentation and other material submitted by vendor in response to any solicitations or under any resulting contract thereof may be subject to public disclosure under the Texas Public Information Act (TX Gov t Code,

GENERAL PROVISIONS
CDBG ROUND 1 SANTA FE HIGH SCHOOL GENERATOR
GALVESTON COUNTY, TEXAS

Chapter 552) Vendors are hereby notified that Galveston County strictly adheres to this statute and the interpretations thereof rendered by the Courts and/or Texas Attorney General s office Vendor shall be deemed to have knowledge of this law and how to protect their interests under it Exceptions to disclosure of information as provided by this statute are intended to protect legitimate interests of the County or vendor, and are not intended to serve as a means to withhold or delay disclosure of information not covered by these exceptions

If vendor considers any submitted information to be proprietary in nature, protected by trade secrets, or otherwise confidential, said material should be clearly marked and conspicuously notated as such. Failure to do so shall not place any burden on the County of Galveston for the release of any material not abiding by this provision

38 NOTICE

Any notice required or permitted between the parties under this contract must be in writing and shall be delivered in person or mailed, certified mail, return receipt requested, or may be transmitted by fax as follows

To the County at

Hon Mark A Henry, County Judge
722 Moody
Second (2nd) Floor
Galveston, Texas 77550
Fax (409) 765-2653

And to

Rufus G Crowder, CPPB
Purchasing Agent
722 Moody Fifth (5th) Floor
Galveston, Texas 77550
Fax (409) 621-7987

Harvey Bazaman
Director of County Legal
722 Moody, Fifth (5th) Floor
Galveston, Texas 77550
Fax (409) 770-5560

III

VENDOR QUALIFICATION PACKET

County of Galveston
Purchasing Department
Vendor Qualification Packet

(rev 1 2, March 29, 2010)

All interested parties seeking consideration for qualified vendor status with the County of Galveston **should complete and return only the following attached forms to.**

Galveston County Purchasing Department
722 Moody Avenue, (21st Street), 5th Floor
Galveston, Texas 77550
(409) 770-5371 ***office***
(409) 621-7987 ***fax***

Form PEID: Person /Entity Information Data

Form W-9: Request for Taxpayer Identification Number and Certification
(please note that the included form may not be the latest revised form issued by the Internal Revenue Service Please check the IRS website at http //www irs gov/pub/irs-pdf/fw9 pdf for the latest revision of this form)

Form CIQ: Conflict of Interest Questionnaire
(please note that the included form may not be the latest revised form issued by the State of Texas Ethics Commission Please check the Texas Ethics Commission website at for the latest revision of this form Please note that Galveston County Purchasing Agent is not responsible for the filing of this form with the Galveston County Clerk per instructions of the State of Texas Ethics Commission)

Certificate(s) of Insurance: **If the person or entity seeking qualified vendor status with the County will be performing work at or on any County owned facility and/or property, Certificate(s) of Insurance are required to be submitted prior to performing any work.**

Insurance requirements are as follows

Public Liability and Property Damage Insurance:

Successful vendor agrees to keep in full force and effect, a policy of public liability and property damage insurance issued by a casualty company authorized to do business in the State of Texas, and in standard form approved by the Board of Insurance Commissioners of the State of Texas, with coverage provisions insuring the public from any loss or damage that may arise to any person or property by reason of services rendered by vendor Vendor shall at its own expense be required to carry the following minimum insurance coverages

- For damages arising out of bodily injury to or death of one person in any one occurrence – one hundred thousand and no/100 dollars ($100,000 00),
- For damages arising out of bodily injury to or death of two or more persons in any one occurrence – three hundred thousand and no/100 dollars ($300,000 00), and
- For injury to or destruction of property in any one occurrence – one hundred thousand and no/100 dollars ($100,000 00)

This insurance shall be either on an occurrence basis or on a claims made basis Provided however, that if the coverage is on a claims made basis, then the vendor shall be required to purchase, at the termination of this agreement, tail coverage for the County for the period of the County's relationship with the vendor under this agreement Such coverage shall be in the amounts set forth in subparagraphs (1), (2), and (3) above

Worker's Compensation Insurance:

Successful vendor shall also carry in full force Workers' Compensation Insurance policy(ies), if there is more than one employee, for all employees, including but not limited to full time, part time, and emergency employees employed by the vendor Current insurance certificates certifying that such policies as specified above are in full force and effect shall be furnished by the vendor to the County

The County of Galveston shall be named as additional insured on policies listed in subparagraphs above and shall be notified of any changes to the policy(ies) during the contractual period. Insurance is to be placed with insurers having a Best rating of no less than A The vendor shall furnish the County with certificates of insurance and original endorsements affecting coverage required by these insurance clauses The certificates and endorsements for each insurance policy are to be signed by a person authorized by the insurer to bind coverage on its behalf The vendor shall be required to submit annual renewals for the term of any contractual agreement, purchase order or term contract, with Galveston County prior to expiration of any policy

In addition to the remedies stated herein, the County has the right to pursue other remedies permitted by law or in equity

The County agrees to provide vendor with reasonable and timely notice of any claim, demand, or cause of action made or brought against the County arising out of or related to utilization of the property Vendor shall have the right to defend any such claim, demand, or cause of action at its sole cost and expense and within its sole and exclusive discretion The County agrees not to compromise or settle any claim or cause of action arising out of or related to the utilization of the property without the prior written consent of the vendor

In no event shall the County be liable for any damage to or destruction of any property belonging to the vendor unless specified in writing and agreed upon by both parties

Procurement Policy - Special Note:

Understand that it is, according to Texas Local Government Code, Section 262 011, Purchasing Agents, subsections (d), (e), and (f), the sole responsibility of the Purchasing Agent to supervise all procurement transactions

Therefore, be advised that all procurement transactions require proper authorization in the form of a Galveston County purchase order from the Purchasing Agent's office prior to commitment to deliver supplies, materials, equipment, including contracts for repair, service, and maintenance agreements Any commitments made without proper authorization from the Purchasing Agent's office, pending Commissioners' Court approval, may become the sole responsibility of the individual making the commitment including the obligation of payment

Code of Ethics - Statement of Purchasing Policy:

Public employment is a public trust It is the policy of Galveston County to promote and balance the objective of protecting the County's integrity and the objective of facilitating the recruitment and

retention of personnel needed by Galveston County Such policy is implemented by prescribing essential standards of ethical conduct without creating unnecessary obstacles to entering public office

Public employees must discharge their duties impartially so as to assure fair competitive access to governmental procurement by responsible contractors Moreover, they should conduct themselves in such a manner as to foster public confidence in the integrity of the Galveston County procurement organization

To achieve the purpose of these instructions, it is essential that those doing business with Galveston County also observe the ethical standards prescribed here

General Ethical Standards: It shall be a breach of ethics to attempt to realize personal gain through public employment with Galveston County by any conduct inconsistent with the proper discharge of the employee's duties

It shall be a breach of ethics to attempt to influence any public employee of Galveston County to breach the standards of ethical conduct set forth in this code

It shall be a breach of ethics for any employee of Galveston County to participate directly or indirectly in procurement when the employee knows that

- The employee or any member of the employee's immediate family has a financial interest pertaining to the procurement
- A business or organization in which the employee, or any member of the employee's immediate family, has a financial interest pertaining to the procurement
- Any other person, business or organization with which the employee or any member of the employee's immediate family is negotiating or has an arrangement concerning prospective employment is involved in the procurement

Gratuities: It shall be a breach of ethics to offer, give or agree to give any employee of Galveston County, or for any employee or former employee of Galveston County to solicit, demand, accept or agree to accept from another person, a gratuity or an offer of employment in connection with any decision, approval, disapproval, recommendation, preparation of any part of a program requirement or purchase request, influencing the content of any specification or procurement standard, rendering of advice, investigation, auditing, or in any other advisory capacity in any program requirement or a contract or subcontract, or to any solicitation or proposal therefore pending before this government

Kickbacks: It shall be a breach of ethics for any payment, gratuity or offer of employment to be made by or on behalf of a subcontractor under a contract to the prime contractor or higher tier subcontractor for any contract for Galveston County, or any person associated therewith, as an inducement for the award of a subcontract or order

Contract Clause: The prohibition against gratuities and kickbacks prescribed above shall be conspicuously set forth in every contract and solicitation by Galveston County

Confidential Information: It shall be a breach of ethics for any employee or former employee of Galveston County to knowingly use confidential information for actual or anticipated personal gain, or for the actual or anticipated gain of any person

Questions/Concerns:
If you have any questions or concerns regarding the information or instructions contained within this packet, please contact any member of the Purchasing Department staff at **(409) 770-5371**

Conflict of Interest Forms

Conflict of Interest Reporting:

Proposer may be required under Chapter 176 of the Texas Local Government Code to complete and file a conflict of interest questionnaire (CIQ Form) with the County Clerk of Galveston County, Texas

If Proposer has an employment or other business relationship with an officer of Galveston County or with a family member of an officer of Galveston County that results in the officer or family member of the officer receiving taxable income that exceeds $2,500 00 during the preceding 12-month period, then Proposer **MUST** complete and file a CIQ Form as required under Chapter 176

If Proposer has given an officer of Galveston County or a family member of an officer of Galveston County one or more gifts with an aggregate value of more than $250 00 during the preceding 12-months, then Proposer **MUST** complete and file a CIQ Form as required under Chapter 176

A blank CIQ Form is enclosed with this proposal Blank CIQ Forms may also be obtained by visiting the Galveston County Clerk's website and/or the Purchasing Agent's website – both of these web sites are linked to the Galveston County homepage, at http //www co galveston tx us Blank CIQ Forms may also be obtained by visiting the Texas Ethics Commission website, specifically at http //www ethics state tx us/whatsnew/conflict_forms htm

Chapter 176 specifies deadlines for the filing of CIQ Forms (both initial filings and updated filings)

It is Proposer's sole responsibility to file a true and complete CIQ Form with the Galveston County Clerk if required Proposer is advised that it is an offense to fail to comply with the disclosure reporting requirements dictated under Chapter 176.

In the event Proposer believes that it is not required to file the CIQ Form, then Proposer hereby **CERTIFIES** that by submission of its proposal without the enclosed copy of the filed CIQ Form, that Proposer is not currently required to file a CIQ Form

If you have questions about compliance with Chapter 176, please consult your own legal counsel Compliance is the individual responsibility of each person, business, and agent who is subject to Chapter 176 of the Texas Local Government Code

All information provided on the submitted forms must be typed or plainly and legibly handwritten in blue or black ink In addition, wherever signatures are requested, the name(s) of the person(s) signing must be printed or typed directly beneath the signature line

Any document that is deemed not legible may cause vendor status to be suspended or denied until corrected

Forms CIS and CIQ must be filed with the County Clerk The Galveston County Clerk has offices at the following locations

Galveston County Clerk
Galveston County Criminal Justice Center, Suite 2001
600 59th Street
Galveston, Texas 77551

Galveston County Clerk
North County Annex, 1st Floor
174 Calder Road
League City, Texas 77573

If you are required to report under Chapter 176 of the Texas Local Government Code, it is your sole responsibility to comply with the reporting requirements Compliance with Texas Local Government Code Chapter 176 is the individual responsibility of each local government officer, individual, business, and agent, as applicable. Chapter 176 provides that failure to comply with the reporting requirements is an offense

COUNTY of GALVESTON

Purchasing Department

rev 1 3, March 29, 2010

FORM PEID:	Request for Person-Entity Identification Data

Instructions Please type or print clearly when completing sections 1 thru 4 and return completed form to

Galveston County Purchasing Agent
722 Moody Avenue (21st. Street), 5th Floor
Galveston, Texas 77550
(409) 770-5371 ***office***
(409) 621-7987 ***fax***

1.

Business Name	Crescent Engineering & Inc dba Crescent Electric
Attention Line:	Clarence Broze Jr

2.

Physical Address:	1319 First St		
City:	LaMarque	State: TX	Zip+4 77568

3.

Billing / Remit Address.	PO Box 36		
City:	LaMarque	State: TX	Zip+4 77568

4.

Main Contact Person	Teresa S. Gonzales
Main Phone Number:	409 935 2416
Fax Number:	409 935 2496
E-mail Address	crescentelectric@comcast.net

Areas below are for County use only.

Requested By:	Phone / Ext. #
Department.	Date:

Action Requested - Check One.	IFAS PEID Vendor Number:	
( ) Add New	( ) Change Data	( ) Re-activate
( ) Inactivate	( ) Employee	( ) Attorney
( ) Landlord	( ) Foster Parent	( ) Refund
( ) One Time	( ) Foster Child	

Form **W-9**
(Rev January 2011)
Department of the Treasury
Internal Revenue Service

Request for Taxpayer Identification Number and Certification

Give Form to the requester Do not send to the IRS

Print or type
See Specific Instructions on page 2

Name (as shown on your income tax return)
Crescent Engineering Co Inc

Business name/disregarded entity name if different from above
Crescent Electric

Check appropriate box for federal tax classification (required) ☐ Individual/sole proprietor ☑ C Corporation ☐ S Corporation ☐ Partnership ☐ Trust/estate

☐ Limited liability company Enter the tax classification (C=C corporation, S=S corporation P=partnership) ▶

☐ Other (see instructions) ▶

☐ Exempt payee

Address (number, street and apt or suite no)
1319 First St.

Requester's name and address (optional)

City state and ZIP code
LaMarque TX 77568

List account number(s) here (optional)

Part I Taxpayer Identification Number (TIN)

Enter your TIN in the appropriate box The TIN provided must match the name given on the "Name" line to avoid backup withholding For individuals, this is your social security number (SSN) However, for a resident alien, sole proprietor, or disregarded entity, see the Part I instructions on page 3 For other entities, it is your employer identification number (EIN) If you do not have a number, see *How to get a TIN* on page 3

Social security number
☐☐☐ - ☐☐ - ☐☐☐☐

Note If the account is in more than one name, see the chart on page 4 for guidelines on whose number to enter

Employer identification number
76-0252028

Part II Certification

Under penalties of perjury I certify that

1 The number shown on this form is my correct taxpayer identification number (or I am waiting for a number to be issued to me), and

2 I am not subject to backup withholding because (a) I am exempt from backup withholding, or (b) I have not been notified by the Internal Revenue Service (IRS) that I am subject to backup withholding as a result of a failure to report all interest or dividends, or (c) the IRS has notified me that I am no longer subject to backup withholding and

3 I am a U S citizen or other U S person (defined below)

Certification instructions You must cross out item 2 above if you have been notified by the IRS that you are currently subject to backup withholding because you have failed to report all interest and dividends on your tax return For real estate transactions, item 2 does not apply For mortgage interest paid, acquisition or abandonment of secured property, cancellation of debt, contributions to an individual retirement arrangement (IRA) and generally, payments other than interest and dividends, you are not required to sign the certification, but you must provide your correct TIN See the instructions on page 4

Sign Here Signature of U.S person ▶ Teresa D Gonzalez Date ▶ 11-4-11

General Instructions

Section references are to the Internal Revenue Code unless otherwise noted

Purpose of Form

A person who is required to file an information return with the IRS must obtain your correct taxpayer identification number (TIN) to report, for example, income paid to you real estate transactions, mortgage interest you paid, acquisition or abandonment of secured property, cancellation of debt, or contributions you made to an IRA

Use Form W-9 only if you are a U S person (including a resident alien) to provide your correct TIN to the person requesting it (the requester) and, when applicable, to

1 Certify that the TIN you are giving is correct (or you are waiting for a number to be issued),

2 Certify that you are not subject to backup withholding, or

3 Claim exemption from backup withholding if you are a U S exempt payee If applicable, you are also certifying that as a U S person, your allocable share of any partnership income from a U S trade or business is not subject to the withholding tax on foreign partners' share of effectively connected income

Note If a requester gives you a form other than Form W-9 to request your TIN you must use the requester's form if it is substantially similar to this Form W-9

Definition of a U S person For federal tax purposes you are considered a U S person if you are

- An individual who is a U S citizen or U S resident alien
- A partnership, corporation company or association created or organized in the United States or under the laws of the United States
- An estate (other than a foreign estate), or
- A domestic trust (as defined in Regulations section 301 7701-7)

Special rules for partnerships Partnerships that conduct a trade or business in the United States are generally required to pay a withholding tax on any foreign partners' share of income from such business Further, in certain cases where a Form W-9 has not been received, a partnership is required to presume that a partner is a foreign person and pay the withholding tax Therefore, if you are a U S person that is a partner in a partnership conducting a trade or business in the United States, provide Form W-9 to the partnership to establish your U S status and avoid withholding on your share of partnership income

The person who gives Form W-9 to the partnership for purposes of establishing its U S status and avoiding withholding on its allocable share of net income from the partnership conducting a trade or business in the United States is in the following cases

- The U S owner of a disregarded entity and not the entity,
- The U S grantor or other owner of a grantor trust and not the trust, and
- The U S trust (other than a grantor trust) and not the beneficiaries of the trust

Foreign person If you are a foreign person, do not use Form W-9 Instead use the appropriate Form W-8 (see Publication 515, Withholding of Tax on Nonresident Aliens and Foreign Entities)

Nonresident alien who becomes a resident alien Generally only a nonresident alien individual may use the terms of a tax treaty to reduce or eliminate U S tax on certain types of income However, most tax treaties contain a provision known as a saving clause " Exceptions specified in the saving clause may permit an exemption from tax to continue for certain types of income even after the payee has otherwise become a U S resident alien for tax purposes

If you are a U S resident alien who is relying on an exception contained in the saving clause of a tax treaty to claim an exemption from U S tax on certain types of income, you must attach a statement to Form W-9 that specifies the following five items

1 The treaty country Generally, this must be the same treaty under which you claimed exemption from tax as a nonresident alien

2 The treaty article addressing the income

3 The article number (or location) in the tax treaty that contains the saving clause and its exceptions

4 The type and amount of income that qualifies for the exemption from tax

5 Sufficient facts to justify the exemption from tax under the terms of the treaty article

Example Article 20 of the U S -China income tax treaty allows an exemption from tax for scholarship income received by a Chinese student temporarily present in the United States Under U S law, this student will become a resident alien for tax purposes if his or her stay in the United States exceeds 5 calendar years However, paragraph 2 of the first Protocol to the U S -China treaty (dated April 30, 1984) allows the provisions of Article 20 to continue to apply even after the Chinese student becomes a resident alien of the United States A Chinese student who qualifies for this exception (under paragraph 2 of the first protocol) and is relying on this exception to claim an exemption from tax on his or her scholarship or fellowship income would attach to Form W-9 a statement that includes the information described above to support that exemption

If you are a nonresident alien or a foreign entity not subject to backup withholding, give the requester the appropriate completed Form W-8

What is backup withholding? Persons making certain payments to you must under certain conditions withhold and pay to the IRS a percentage of such payments This is called 'backup withholding " Payments that may be subject to backup withholding include interest, tax-exempt interest, dividends, broker and barter exchange transactions, rents, royalties, nonemployee pay, and certain payments from fishing boat operators Real estate transactions are not subject to backup withholding

You will not be subject to backup withholding on payments you receive if you give the requester your correct TIN make the proper certifications and report all your taxable interest and dividends on your tax return

Payments you receive will be subject to backup withholding if

1 You do not furnish your TIN to the requester,

2 You do not certify your TIN when required (see the Part II instructions on page 3 for details),

3 The IRS tells the requester that you furnished an incorrect TIN,

4 The IRS tells you that you are subject to backup withholding because you did not report all your interest and dividends on your tax return (for reportable interest and dividends only), or

5 You do not certify to the requester that you are not subject to backup withholding under 4 above (for reportable interest and dividend accounts opened after 1983 only)

Certain payees and payments are exempt from backup withholding See the instructions below and the separate Instructions for the Requester of Form W-9

Also see *Special rules for partnerships* on page 1

Updating Your Information

You must provide updated information to any person to whom you claimed to be an exempt payee if you are no longer an exempt payee and anticipate receiving reportable payments in the future from this person For example, you may need to provide updated information if you are a C corporation that elects to be an S corporation or if you no longer are tax exempt In addition, you must furnish a new Form W-9 if the name or TIN changes for the account for example if the grantor of a grantor trust dies

Penalties

Failure to furnish TIN If you fail to furnish your correct TIN to a requester, you are subject to a penalty of $50 for each such failure unless your failure is due to reasonable cause and not to willful neglect

Civil penalty for false information with respect to withholding If you make a false statement with no reasonable basis that results in no backup withholding, you are subject to a $500 penalty

Criminal penalty for falsifying information Willfully falsifying certifications or affirmations may subject you to criminal penalties including fines and/or imprisonment

Misuse of TINs If the requester discloses or uses TINs in violation of federal law, the requester may be subject to civil and criminal penalties

Specific Instructions

Name

If you are an individual, you must generally enter the name shown on your income tax return However if you have changed your last name for instance, due to marriage without informing the Social Security Administration of the name change, enter your first name, the last name shown on your social security card, and your new last name

If the account is in joint names, list first, and then circle, the name of the person or entity whose number you entered in Part I of the form

Sole proprietor Enter your individual name as shown on your income tax return on the "Name" line You may enter your business trade, or "doing business as (DBA)' name on the "Business name/disregarded entity name" line

Partnership, C Corporation, or S Corporation Enter the entity's name on the "Name" line and any business trade or doing business as (DBA) name" on the "Business name/disregarded entity name line

Disregarded entity Enter the owner's name on the "Name' line The name of the entity entered on the "Name" line should never be a disregarded entity The name on the "Name" line must be the name shown on the income tax return on which the income will be reported For example, if a foreign LLC that is treated as a disregarded entity for U S federal tax purposes has a domestic owner, the domestic owner s name is required to be provided on the "Name" line If the direct owner of the entity is also a disregarded entity enter the first owner that is not disregarded for federal tax purposes Enter the disregarded entity s name on the "Business name/disregarded entity name' line If the owner of the disregarded entity is a foreign person you must complete an appropriate Form W-8

Note Check the appropriate box for the federal tax classification of the person whose name is entered on the ' Name' line (Individual/sole proprietor, Partnership C Corporation S Corporation Trust/estate)

Limited Liability Company (LLC) If the person identified on the ' Name" line is an LLC, check the "Limited liability company' box only and enter the appropriate code for the tax classification in the space provided If you are an LLC that is treated as a partnership for federal tax purposes, enter "P" for partnership If you are an LLC that has filed a Form 8832 or a Form 2553 to be taxed as a corporation enter 'C" for C corporation or "S" for S corporation If you are an LLC that is disregarded as an entity separate from its owner under Regulation section 301 7701-3 (except for employment and excise tax), do not check the LLC box unless the owner of the LLC (required to be identified on the "Name" line) is another LLC that is not disregarded for federal tax purposes If the LLC is disregarded as an entity separate from its owner, enter the appropriate tax classification of the owner identified on the "Name line

Other entities Enter your business name as shown on required federal tax documents on the Name" line This name should match the name shown on the charter or other legal document creating the entity You may enter any business trade or DBA name on the Business name/ disregarded entity name' line

Exempt Payee

If you are exempt from backup withholding, enter your name as described above and check the appropriate box for your status then check the "Exempt payee" box in the line following the "Business name/ disregarded entity name," sign and date the form

Generally, individuals (including sole proprietors) are not exempt from backup withholding Corporations are exempt from backup withholding for certain payments, such as interest and dividends

Note If you are exempt from backup withholding, you should still complete this form to avoid possible erroneous backup withholding

The following payees are exempt from backup withholding

1 An organization exempt from tax under section 501(a), any IRA or a custodial account under section 403(b)(7) if the account satisfies the requirements of section 401(f)(2),

2 The United States or any of its agencies or instrumentalities,

3 A state the District of Columbia, a possession of the United States, or any of their political subdivisions or instrumentalities,

4 A foreign government or any of its political subdivisions, agencies, or instrumentalities or

5 An international organization or any of its agencies or instrumentalities

Other payees that may be exempt from backup withholding include

6 A corporation,

7 A foreign central bank of issue,

8 A dealer in securities or commodities required to register in the United States, the District of Columbia or a possession of the United States

9 A futures commission merchant registered with the Commodity Futures Trading Commission

10 A real estate investment trust,

11 An entity registered at all times during the tax year under the Investment Company Act of 1940

12 A common trust fund operated by a bank under section 584(a),

13 A financial institution

14 A middleman known in the investment community as a nominee or custodian, or

15 A trust exempt from tax under section 664 or described in section 4947

The following chart shows types of payments that may be exempt from backup withholding The chart applies to the exempt payees listed above 1 through 15

IF the payment is for	THEN the payment is exempt for
Interest and dividend payments	All exempt payees except for 9
Broker transactions	Exempt payees 1 through 5 and 7 through 13 Also C corporations
Barter exchange transactions and patronage dividends	Exempt payees 1 through 5
Payments over $600 required to be reported and direct sales over $5 000 [1]	Generally exempt payees 1 through 7 [2]

[1] See Form 1099 MISC Miscellaneous Income and its instructions

However the following payments made to a corporation and reportable on Form 1099-MISC are not exempt from backup withholding medical and health care payments attorneys fees gross proceeds paid to an attorney and payments for services paid by a federal executive agency

Part I. Taxpayer Identification Number (TIN)

Enter your TIN in the appropriate box If you are a resident alien and you do not have and are not eligible to get an SSN your TIN is your IRS individual taxpayer identification number (ITIN) Enter it in the social security number box If you do not have an ITIN, see *How to get a TIN* below

If you are a sole proprietor and you have an EIN you may enter either your SSN or EIN However, the IRS prefers that you use your SSN

If you are a single-member LLC that is disregarded as an entity separate from its owner (see *Limited Liability Company (LLC)* on page 2) enter the owner's SSN (or EIN, if the owner has one) Do not enter the disregarded entity's EIN If the LLC is classified as a corporation or partnership, enter the entity's EIN

Note See the chart on page 4 for further clarification of name and TIN combinations

How to get a TIN If you do not have a TIN, apply for one immediately To apply for an SSN, get Form SS-5, Application for a Social Security Card, from your local Social Security Administration office or get this form online at *www ssa gov* You may also get this form by calling 1-800-772-1213 Use Form W-7, Application for IRS Individual Taxpayer Identification Number, to apply for an ITIN, or Form SS-4 Application for Employer Identification Number, to apply for an EIN You can apply for an EIN online by accessing the IRS website at *www irs gov/businesses* and clicking on Employer Identification Number (EIN) under Starting a Business You can get Forms W-7 and SS-4 from the IRS by visiting IRS gov or by calling 1-800-TAX-FORM (1-800-829-3676)

If you are asked to complete Form W-9 but do not have a TIN, write "Applied For" in the space for the TIN, sign and date the form and give it to the requester For interest and dividend payments and certain payments made with respect to readily tradable instruments, generally you will have 60 days to get a TIN and give it to the requester before you are subject to backup withholding on payments The 60-day rule does not apply to other types of payments You will be subject to backup withholding on all such payments until you provide your TIN to the requester

Note Entering 'Applied For' means that you have already applied for a TIN or that you intend to apply for one soon

Caution *A disregarded domestic entity that has a foreign owner must use the appropriate Form W-8*

Part II Certification

To establish to the withholding agent that you are a U S person or resident alien, sign Form W-9 You may be requested to sign by the withholding agent even if item 1, below and items 4 and 5 on page 4 indicate otherwise

For a joint account, only the person whose TIN is shown in Part I should sign (when required) In the case of a disregarded entity the person identified on the "Name" line must sign Exempt payees see *Exempt Payee* on page 3

Signature requirements Complete the certification as indicated in items 1 through 3, below, and items 4 and 5 on page 4

1 Interest, dividend, and barter exchange accounts opened before 1984 and broker accounts considered active during 1983 You must give your correct TIN but you do not have to sign the certification

2 Interest, dividend, broker, and barter exchange accounts opened after 1983 and broker accounts considered inactive during 1983 You must sign the certification or backup withholding will apply If you are subject to backup withholding and you are merely providing your correct TIN to the requester, you must cross out item 2 in the certification before signing the form

3 Real estate transactions You must sign the certification You may cross out item 2 of the certification

4 Other payments You must give your correct TIN, but you do not have to sign the certification unless you have been notified that you have previously given an incorrect TIN "Other payments" include payments made in the course of the requester's trade or business for rents, royalties goods (other than bills for merchandise), medical and health care services (including payments to corporations) payments to a nonemployee for services, payments to certain fishing boat crew members and fishermen, and gross proceeds paid to attorneys (including payments to corporations)

5 Mortgage interest paid by you, acquisition or abandonment of secured property, cancellation of debt, qualified tuition program payments (under section 529), IRA, Coverdell ESA, Archer MSA or HSA contributions or distributions, and pension distributions You must give your correct TIN but you do not have to sign the certification

What Name and Number To Give the Requester

For this type of account	Give name and SSN of
1 Individual	The individual
2 Two or more individuals (joint account)	The actual owner of the account or if combined funds the first individual on the account
3 Custodian account of a minor (Uniform Gift to Minors Act)	The minor [2]
4 a The usual revocable savings trust (grantor is also trustee)	The grantor trustee [1]
b So-called trust account that is not a legal or valid trust under state law	The actual owner
5 Sole proprietorship or disregarded entity owned by an individual	The owner [3]
6 Grantor trust filing under Optional Form 1099 Filing Method 1 (see Regulation section 1 671 4(b)(2)(i)(A))	The grantor
For this type of account	**Give name and EIN of:**
7 Disregarded entity not owned by an individual	The owner
8 A valid trust estate or pension trust	Legal entity [4]
9 Corporation or LLC electing corporate status on Form 8832 or Form 2553	The corporation
10 Association club religious charitable educational or other tax-exempt organization	The organization
11 Partnership or multi-member LLC	The partnership
12 A broker or registered nominee	The broker or nominee
13 Account with the Department of Agriculture in the name of a public entity (such as a state or local government school district or prison) that receives agricultural program payments	The public entity
14 Grantor trust filing under the Form 1041 Filing Method or the Optional Form 1099 Filing Method 2 (see Regulation section 1 671 4(b)(2)(i)(B))	The trust

[1] List first and circle the name of the person whose number you furnish If only one person on a joint account has an SSN that person s number must be furnished

Circle the minor s name and furnish the minor s SSN

[3] You must show your individual name and you may also enter your business or DBA name on the Business name/disregarded entity name line You may use either your SSN or EIN (if you have one) but the IRS encourages you to use your SSN

[4] List first and circle the name of the trust estate or pension trust (Do not furnish the TIN of the personal representative or trustee unless the legal entity itself is not designated in the account title) Also see *Special rules for partnerships* on page 1

***Note** Grantor also must provide a Form W 9 to trustee of trust

Note If no name is circled when more than one name is listed the number will be considered to be that of the first name listed

Secure Your Tax Records from Identity Theft

Identity theft occurs when someone uses your personal information such as your name, social security number (SSN), or other identifying information, without your permission to commit fraud or other crimes An identity thief may use your SSN to get a job or may file a tax return using your SSN to receive a refund

To reduce your risk

- Protect your SSN,
- Ensure your employer is protecting your SSN and
- Be careful when choosing a tax preparer

If your tax records are affected by identity theft and you receive a notice from the IRS respond right away to the name and phone number printed on the IRS notice or letter

If your tax records are not currently affected by identity theft but you think you are at risk due to a lost or stolen purse or wallet questionable credit card activity or credit report, contact the IRS Identity Theft Hotline at 1-800-908-4490 or submit Form 14039

For more information, see Publication 4535, Identity Theft Prevention and Victim Assistance

Victims of identity theft who are experiencing economic harm or a system problem, or are seeking help in resolving tax problems that have not been resolved through normal channels may be eligible for Taxpayer Advocate Service (TAS) assistance You can reach TAS by calling the TAS toll-free case intake line at 1-877-777 4778 or TTY/TDD 1-800-829-4059

Protect yourself from suspicious emails or phishing schemes Phishing is the creation and use of email and websites designed to mimic legitimate business emails and websites The most common act is sending an email to a user falsely claiming to be an established legitimate enterprise in an attempt to scam the user into surrendering private information that will be used for identity theft

The IRS does not initiate contacts with taxpayers via emails Also, the IRS does not request personal detailed information through email or ask taxpayers for the PIN numbers, passwords or similar secret access information for their credit card bank or other financial accounts

If you receive an unsolicited email claiming to be from the IRS forward this message to *phishing@irs gov* You may also report misuse of the IRS name logo, or other IRS property to the Treasury Inspector General for Tax Administration at 1-800-366-4484 You can forward suspicious emails to the Federal Trade Commission at *spam@uce gov* or contact them at *www ftc gov/idtheft* or 1-877-IDTHEFT (1-877-438-4338)

Visit IRS gov to learn more about identity theft and how to reduce your risk

Privacy Act Notice

Section 6109 of the Internal Revenue Code requires you to provide your correct TIN to persons (including federal agencies) who are required to file information returns with the IRS to report interest dividends or certain other income paid to you mortgage interest you paid the acquisition or abandonment of secured property the cancellation of debt or contributions you made to an IRA Archer MSA or HSA The person collecting this form uses the information on the form to file information returns with the IRS reporting the above information Routine uses of this information include giving it to the Department of Justice for civil and criminal litigation and to cities states the District of Columbia and U S possessions for use in administering their laws The information also may be disclosed to other countries under a treaty to federal and state agencies to enforce civil and criminal laws or to federal law enforcement and intelligence agencies to combat terrorism You must provide your TIN whether or not you are required to file a tax return Under section 3406 payers must generally withhold a percentage of taxable interest dividend and certain other payments to a payee who does not give a TIN to the payer Certain penalties may also apply for providing false or fraudulent information

CONFLICT OF INTEREST QUESTIONNAIRE

FORM CIQ

For vendor or other person doing business with local governmental entity

This questionnaire reflects changes made to the law by H B 1491, 80th Leg , Regular Session

This questionnaire is being filed in accordance with Chapter 176, Local Government Code by a person who has a business relationship as defined by Section 176 001(1-a) with a local governmental entity and the person meets requirements under Section 176 006(a)

By law this questionnaire must be filed with the records administrator of the local governmental entity not later than the 7th business day after the date the person becomes aware of facts that require the statement to be filed *See* Section 176 006, Local Government Code

A person commits an offense if the person knowingly violates Section 176 006 Local Government Code An offense under this section is a Class C misdemeanor

OFFICE USE ONLY

Date Received

1 **Name of person who has a business relationship with local governmental entity**

Clarence Broze Jr

2 ☐ **Check this box if you are filing an update to a previously filed questionnaire**

(The law requires that you file an updated completed questionnaire with the appropriate filing authority not later than the 7th business day after the date the originally filed questionnaire becomes incomplete or inaccurate)

3 **Name of local government officer with whom filer has employment or business relationship**

none

Name of Officer

This section (Item 3 including subparts A, B C & D) must be completed for each officer with whom the filer has an employment or other business relationship as defined by Section 176 001(1-a), Local Government Code Attach additional pages to this Form CIQ as necessary

A Is the local government officer named in this section receiving or likely to receive taxable income, other than investment income, from the filer of the questionnaire?

☐ Yes ☐ No

B Is the filer of the questionnaire receiving or likely to receive taxable income, other than investment income, from or at the direction of the local government officer named in this section AND the taxable income is not received from the local governmental entity?

☐ Yes ☐ No

C Is the filer of this questionnaire employed by a corporation or other business entity with respect to which the local government officer serves as an officer or director, or holds an ownership of 10 percent or more?

☐ Yes ☐ No

D Describe each employment or business relationship with the local government officer named in this section

4

Signature of person doing business with the governmental entity

11-4-11

Date

Adopted 06/29/2007

IV-A

INSTRUCTIONS TO BIDDERS

INSTRUCTIONS TO BIDDERS

1 BID PACKAGE

This bid package consists of the Invitation to Bid, the Instructions to Bidders, the bid proposal, the unexecuted Notice of Contract Award, the Special and General Terms and Conditions, any drawings and specifications, and any addenda which the County may issue prior to receipt of bids

2. REVIEW

Each bidder is required to thoroughly review this entire bid packet to familiarize themselves with the bidding procedures, the plans and specifications for the requested work as well as the terms, and conditions of the contact the successful bidder will execute with the County

3 PRE-BID MODIFICATIONS

Any modification to any portion of this bid packet will be in writing in the form of addenda All addenda will be mailed to all holders of plans and specifications at least three (3) days prior to the date of opening bids Bidders should inquire whether addenda have been issued inasmuch as Bidders shall be bound by such addenda whether or not received

4 BID FORMS

All bids must be submitted on forms furnished by County

5 TIME FOR RECEIVING BIDS

Bids received prior to the submission deadline will be maintained unopened until the specified time for bid opening If the bidder fails to identify the Bid Number on the outside of the envelope as required, the Purchasing Agent will open the

envelope for the sole purpose of identifying the Bid Number for which the submission was made The envelope will then be resealed No liability will attach to a County officer or employee for the premature opening of a bid

6 **TERM**

The term of the contract will begin on the date of execution by the County and will terminate on the date specified in the document entitled "Contract Award"

7 **AWARD OF BID**

The award will be to the responsive, responsible bidder(s) who submits the lowest and best bid Criteria utilized for determining responsibility of bidder(s) includes, the bidder's experience, skill, ability, business judgment, financial capacity, integrity, honesty, possession of the necessary facilities or equipment, previous performance, reputation, promptness and any other factor deemed relevant by the County The bidder shall furnish any information requested by the County in order for the County to determine whether a bidder is responsible

8 **SUBSTITUTES**

It is not the County's intent to discriminate against any materials of equal merit to those specified, however, should the Bidder desire to use any substitutions, prior written approval shall be obtained from the County sufficiently in advance in order that an addendum might be issued

9 **REJECTION OF BIDS**

The County, acting through its County Commissioners' Court reserves the right to (1) reject any and all bids and waive any informality in the bids received, (2) disregard the bid of any Bidder determined to be not responsible

10 **BID BOND**

Each Bidder will be required to furnish with his bid a Cashier's or Certified Check from any bank in the State of Texas or an acceptable Bidder's Bond for the sum of 5% of the total highest bid payable to the County of Galveston The certified check or Bid Bond will be returned to the unsuccessful Bidder(s) and to the successful Bidder on the completion of execution of all contract documents and the furnishing of any necessary payment and

performance bonds and insurance certificates

The bid bond or check will be forfeited to the County as liquidated damages should the successful Bidder fail to give the required payment and performance bonds and insurance certificates and execute the contract with the said County within thirty (30) days after receiving notice of acceptance of its bid

11 **PERFORMANCE AND PAYMENT BOND**

V T C A , Government Code Chapter 2253, requires a Performance Bond (for contracts in excess of $100,000) and a Payment Bond (for contracts in excess of $25,000), be provided by the Contractor Each bond required shall be equal to the total contract price and shall be issued by a satisfactory surety company The bond(s) will remain in full force and effect until final completion and acceptance of the work

The bond(s) are to be made payable to the County of Galveston They shall be written on forms provided by the surety for public works projects in Texas They shall also be executed by a surety and licensed to do business in Texas

Bidders should familiarize themselves with the entire provisions of V T C A ,

Chapter 2253 and the penalties provided for its violations before submitting their bid

12 **CONTRACT**

The contract shall become effective upon the Commissioners' Court's execution of same The contract documents shall consist of the contract, the general and special conditions, the drawings, the bid package, any addenda issued, and any change orders issued during the work

13 **TAX EXEMPTION**

This contract is issued by a political subdivision of the State of Texas which qualifies for exemption from sales, excise and use taxes pursuant to Section 151 309, Texas Tax Code

The Contractor performing this contract may purchase, rent or lease all materials, supplies, equipment used or consumed in the performance of this contract by issuing to his supplier an exemption certificate complying with State Comptroller's Ruling #95-9 07 in lieu of the tax Any such exemption certificate issued by the Contractor in lieu of the tax shall be subject to the provisions of the State Comptroller's ruling #95 05 (effective October 2, 1968) or as hereafter amended

IV-B

TXCDBG
INSTRUCTIONS TO BIDDERS
FOR CONSTRUCTION

INSTRUCTION TO BIDDERS
FOR CONSTRUCTION

1 Use of Separate Bid Forms

These contract documents include a complete set of bid and contract forms which are for the convenience of the bidders and are not to be detached from the contract document, completed or executed Separate bid forms are provided for your use

2 Interpretations or Addenda

No oral interpretations will be made to any bidder Each request for an interpretation shall be made in writing to the Grant Recipient or engineer no less than seven (7) days prior to the bid opening Each interpretation made will be in the form of an Addendum to the contract documents and will be distributed to all parties holding contract documents no less than five (5) days prior to the bid opening It is, however, the bidder's responsibility to make inquiry as to any addenda issued All such addenda shall become part of the contract documents and all bidders shall be bound by such addenda, whether or not received by the bidders

3 Inspection of Site

Each bidder should visit the site of the proposed work and fully acquaint himself with the existing conditions there and should fully inform himself as to the facilities involved, the difficulties and restrictions attending the performance of the contract The bidder should thoroughly examine and familiarize himself with the drawings, technical specifications and all other contract documents The contractor by the execution of the contract shall in no way be relieved of any obligation under it due to his failure to receive or examine any form or legal document or to visit the site or acquaint himself with the conditions there existing The city/county will be justified in rejecting any claim based on lack of inspection of the site prior to the bid

4 Alternate bid items

No alternate bids or bid items will be considered unless they are specifically requested by the technical specifications

5 Bids

a All bids must be submitted on the forms provided and are subject to all requirements of the Contract Documents, including the Drawings

b All bids must be regular in every respect and no interlineation, excisions or special conditions may be made or included by the bidder

c Bid documents, including the bid, the bid bond, and the statement of bidders' qualifications shall be sealed in an envelope and clearly labeled with the words "Bid Documents", the project number, name of bidder and the date and time of bid opening

d The Grant Recipient may consider as irregular any bid on which there is an alteration of or departure from the bid form and, at its option, may reject any irregular bid

e If a contract is awarded, it will be awarded to a responsible bidder on the basis of the lowest/best bid and the selected alternate bid items, if any The contract will require the completion of the work in accordance with the contract documents

6 Bid Modifications Prior to Bid Opening

a Any bidder may modify his bid by telegraphic communication at any time prior to the scheduled closing time for receipt of bids, provided such telegraphic communication is received by the Grant Recipient prior to the closing time, and provided further, the Grant Recipient is satisfied that a written confirmation of the telegraphic modification over the signature of the bidder was mailed prior to the closing time The telegraphic communication should not reveal the bid price but should provide the addition, subtractions or other modifications so that the final prices or terms will not be known by the Grant Recipient until the sealed bid is open If written confirmation is not received within two (2) days from the closing time, no consideration will be given to the telegraphic modification

b Likewise, any bidder may modify a bid by submitting a supplemental bid in person prior to the scheduled closing time for receipt of bids Such supplemental bid should mention only additions or subtractions to the original bid so as to not reveal the final prices or terms to the Grant Recipient until the sealed bid is open

7 Bid Bond

a A bid bond in the amount of 5% of the bid issued by an acceptable surety shall be submitted with each bid A certified check or bank draft payable to the Grant Recipient or negotiable U S Government Bonds (as par value) may be submitted in lieu of the Bid Bond

b The bid bond or its comparable, will be returned to the bidder as soon as practical after the opening of the bids

8 Statement of Bidders Qualifications

Each bidder shall submit on the form furnished for that purpose a statement of the bidder's qualifications The Grant Recipient shall have the right to take such steps as it deems necessary to determine the ability of the bidder to perform his obligations under the contract, and the bidder shall furnish the Grant Recipient all such information and data for this purpose as it may request The right is reserved to reject any bid where an investigation of the available data does not satisfy the Grant Recipient that the bidder is qualified to carry out properly the terms of the contract

9 Unit Price

The unit price for each of the several items in the bid shall include its pro rata share of overhead so that the sum of the products obtained by multiplying the quantity shown for each item by the unit price bid represents the total bid Any bid not conforming to this requirement may be rejected as informal Special attention is drawn to this condition, as the unit prices will be used to determine the amount of any change orders resulting from an increase or decrease in quantities

10 Corrections

Erasures or other corrections in the bid must be noted over the signature of the bidder

11 Time for Receiving Bids

Bids received prior to the advertised hour of opening shall be kept securely sealed The officer appointed to open the bids shall decide when the specified time has arrived and no bid received thereafter will be considered, except that when a bid arrives by mail after the time fixed for opening, but before the reading of all other bids is completed, and it is shown to the satisfaction of the Grant Recipient that the late arrival of the bid was solely due to delay in the mail for which the bidder was not responsible, such bid will be received and considered

12 Opening of Bids

The Grant Recipient shall, at the time and place fixed for the opening of bids, open each bid and publicly read it aloud, irrespective of any irregularities therein Bidders and other interested individuals may be present

13 Withdrawal of Bids

Bidder may withdraw the bid before the time fixed for the opening of bids, by communicating his purpose in writing to the locatliy Upon receipt fo such notice, the unopened bid will be returned to the bidder The bid guaranty of any bidder withdrawing his bid will be returned promptly

14 Award of Contract/Rejection of Bids

a The contract will be awarded to the responsive, responsible Bidder submitting the lowest/best bid The bidder selected will be notified at the earliest possible date The Grant Recipient reserves the right to reject any or all bids and to waive any informality in bids received where such rejection or waiver is in its interest

b The Grant Recipient reserves the right to consider as unqualified to do the work any bidder who does not habitually perform with his own forces the major portions of the work involved in construction of the improvements embraced in this contract

15 Execution of Agreement/Performance and Payment Bonds

a Performance and Payment Bonds, Requires all prime contractors which enter into a formal contract in excess of $25,000 with the State, any department, board, agency, municipality, county, school district or any division or subdivision thereof, to obtain a Payment Bond in the amount of the contract before commencing with work and a performance bond for public works contracts in excess of $100,000

b The failure of the successful bidder to execute the agreement and supply the required bonds within ten (10) days after the prescribed forms are presented for signature, or within such extended period as the Grant Recipient may grant, shall constitute a default and the Grant Recipient may, at its option either award the contract to the next lowest responsible bidder, or re-advertise for bids In either case, the Grant Recipient may charge against the bidder the difference between the amount of the bid, and the amount for which a contract is subsequently executed irrespective of whether this difference exceeds the amount of the bid bond If a more favorable bid is received

through re-advertisement, the defaulting bidder shall have no claim against the Grant Recipient for a refund

16 Wages and Salaries

Attention is particularly called to the requirement of paying not less than the prevailing Davis Bacon Related Acts (DBRA) wage rates specified in the Contract Documents These rates are minimums to be paid during the life of the contract It is therefore the responsibility of the Bidder to inform themselves as to local labor conditions

17 Equal Employment Opportunity

Attention is called to the requirements for ensuring that employees and applicants for employment are not discriminated against because of their race, color, creed, sex, gender, or national origin

V

BID PROPOSAL

BID NUMBER B111056

BID PROPOSAL

The bidder hereby proposes to furnish all labor, material, equipment and incidentals for

PERMANENT EMERGENCY GENERATOR
TO SERVE
SANTA FE HIGH SCHOOL

Enclosed is a Certified Check, Cashier's Check or Bid Bond in the sum of 5% of the greatest amount bid

Bidder agrees to perform in accordance with the requirements of the contract documents in consideration of payment by the County of the prices in this proposal

IN CASE OF DISCREPANCY BETWEEN UNIT PRICES AND EXTENDED PRICES, UNIT PRICES WILL GOVERN.

This bid sheet must be completely filled out in ink or typewritten with any necessary supplemental information attached.

The undersigned hereby agrees to all of the foregoing terms and provisions and to all terms and provisions of the contract, if awarded, which includes all provisions of Sections I - VI of this bid package

BIDDER	Crescent Engineering & Inc dba Crescent Electric
SIGNATURE	[signature]
PRINT NAME	Clarence Broze Jr
TITLE	President
ADDRESS	319 First St
CITY, STATE	La Marque, TX
ZIP	77568
TELEPHONE	409 935 2416
FAX NO	409 935 2428
DATE	11-22-11
TAX I D No	76-0252028

BID PROPOSAL

Date 11-22-2011

Bid of Crescent Engineering Co Inc dba Crescent Electric
(Legal Name of Bidder – Company)

[ ] an individual proprietorship

[✓] a corporation organized and existing under the laws of Texas

[ ] a partnership consisting of _____

_____

[ ] a joint venture

[ ] other _____

FOR:

CONSTRUCTION OF THE
PERMANENT EMERGENCY GENERATOR
TO SERVE
SANTA FE HIGH SCHOOL

IN
GALVESTON COUNTY, TEXAS
LJA JOB NO. 0384-9003E

TO:

SANTA FE HIGH SCHOOL GENERATOR
Please send Bid submittals to
Galveston County Purchasing Agent
Attention: Rufus Crowder, CPPB
722 Moody (21st Street), Fifth (5th) Floor
Galveston, Texas 77550

PROPOSAL BIDDING SHEET

CONSTRUCTION OF THE
PERMANENT EMERGENCY GENERATOR
TO SERVE
SANTA FE HIGH SCHOOL

IN
GALVESTON COUNTY, TEXAS
LJA JOB NO. 0384-9003E

Gentlemen

Pursuant to the foregoing Invitation and Instructions to Bidders, the undersigned bidder hereby proposes to do all the work for the unit prices bid to furnish all necessary superintendence, labor, machine, equipment, tools, materials, insurance and miscellaneous items, to complete all work according to the bids, as provided in the construction plan and contract documents for the construction of the Permanent Emergency Generator to serve Santa Fe High School, and clean up the site to the satisfaction of the Owner/Engineer, and bind himself on acceptance of this proposal to execute a contract and bonds for completing said project within the time stated for the following prices, to wit

BASE BID ITEMS

ITEM NO.	QTY.	UNIT	ITEM DESCRIPTION AND TOTAL WRITTEN UNIT PRICE	UNIT PRICE	AMOUNT
1	1	LS	Site work Including Concrete Pad, Concrete Paving, Chain Link Fence with Gate, Fine Grading, bollards, and Seeding Complete in place for One Hundred Nine Thousand dollars and 0 cents per unit	109,000.00	109,000.00
2.	1	LS	Standby Diesel Generator as Specified in the Plans and Specifications, Including Generator, Fuel Tanks **(to be filled by contractor at completion of project)**, Sound Attenuating Enclosure Complete in place for Eight Hundred Forty Two Thousand dollars and 0 cents per unit	$842,000.00	$842,000.00
3	1	LS	Electrical System Installation for Standby Diesel Generator, Including Generator Feeders, Automatic Transfer Switch, Centerpoint Energy T&C fee & Requirements, and All Other Appurtenances as Shown on Plans and as Described in Specifications for a Complete Operating System Complete in place for Five Hundred Six Thousand Five Hundred Sixty Five dollars and ____ cents per unit	$506,565.00	$506,565.00
SUBTOTAL BASE BID ITEMS				$1,457,565.00	

PROPOSAL BIDDING SHEET

CONSTRUCTION OF THE
PERMANENT EMERGENCY GENERATOR
TO SERVE
SANTA FE HIGH SCHOOL

IN
GALVESTON COUNTY, TEXAS
LJA JOB NO 0384-9003E

SUBTOTAL BASE BID ITEMS	$ 1,457,565.00
TOTAL AMOUNT BID	$ 1,457,565.00

It is understood that in the event the successful bidder fails to enter into the Contract and to furnish a Performance Bond and Payment Bond in the amount of 100 percent of the Contract and for all parts of the work, as specified in the Instructions to Bidders, the Bidder will forfeit the Cashier's Check OR Bid Bond, as provided in the Contract Documents

The undersigned proposes, if awarded the Contract, to begin work as stipulated in the written Notice to Proceed issued by the Engineer, and to substantially complete the work within 170 calendar days after the date the work commences and to complete the project within 180 calendar days after the date of work commences

This bid proposal shall be considered part of the contract

(Signature)

Clarence Broze, Jr
(Type Name)

President
(Title)

(Attest)

(Seal, If Bidder is a Corporation)

Crescent Engineering & Inc dba Crescent Electric
(Company Name – Bidder)

1319 First St
(Address)

LaMarque Galveston 77568
(City) (County) (Zip)

409 935 2416
(Phone No)

409 935 2428
(Fax No)

crescentelectric@comcast.net
(E-mail Address)

PROPOSAL BIDDING SHEET

CONSTRUCTION OF THE
PERMANENT EMERGENCY GENERATOR
TO SERVE
SANTA FE HIGH SCHOOL

IN
GALVESTON COUNTY, TEXAS
LJA JOB NO. 0384-9003E

ACKNOWLEDGMENT OF RECEIPT OF ADDENDUM

ADDENDUM NO 1	Signature	10-7-11 Date
ADDENDUM NO 2	Signature	10-12-11 Date
ADDENDUM NO 3	Signature	10-13-11 Date
ADDENDUM NO 4	Signature	10-19-11 Date
ADDENDUM NO 5	Signature	10 21-11 Date
ADDENDUM NO 6	Signature	11-2-11 Date
#7		11-5-11
#8		11-18-11

THE AMERICAN INSTITUTE OF ARCHITECTS

AIA Document A310

Bid Bond

KNOW ALL MEN BY THESE PRESENTS, that we **Crescent Engineering, Inc dba Crescent Electric** as Principal, hereinafter called the Principal, and **International Fidelity Insurance Company** a corporation duly organized under the laws of the State of **New Jersey** as Surety, hereinafter called the Surety, are held and firmly bound unto

Galveston County

as Obligee, hereinafter called the Obligee, in the sum of **Five Percent of the Greatest Amount Bid**

Dollars ($ **5% of G.A B**),

for the payment of which sum well and truly to be made, the said Principal and the said Surety, bind ourselves, our heirs, executors, administrators, successors and assigns, jointly and severally, firmly by these presents

WHEREAS, the Principal has submitted a bid for

CDBG Round 1 Santa Fe High School Generator

NOW, THEREFORE, if the Obligee shall accept the bid of the Principal and the Principal shall enter into a Contract with the Obligee in accordance with the terms of such bid, and give such bond or bonds as may be specified in the bidding or Contract Documents with good and sufficient surety for the faithful performance of such Contract and for the prompt payment of labor and material furnished in the prosecution thereof, or in the event of the failure of the Principal to enter such Contract and give such bond or bonds, if the Principal shall pay to the Obligee the difference not to exceed the penalty hereof between the amount specified in said bid and such larger amount for which the Obligee may in good faith contract with another party to perform the Work covered by said bid, then this obligation shall be null and void, otherwise to remain in full force and effect

Signed and sealed this **22nd** day of **November, 2011**

(Witness)

Crescent Engineering, Inc dba Crescent Electric

(Principal) *(Seal)*

(Title)

Sheila Fink *(Witness)*

International Fidelity Insurance Company

(Surety) *(Seal)*

Kenneth L Meyer *(Title) Attorney-In-Fact*

Tel (973) 624-7200

POWER OF ATTORNEY
INTERNATIONAL FIDELITY INSURANCE COMPANY

HOME OFFICE ONE NEWARK CENTER 20TH FLOOR
NEWARK NEW JERSEY 07102-5207

KNOW ALL MEN BY THESE PRESENTS That **INTERNATIONAL FIDELITY INSURANCE COMPANY**, a corporation organized and existing laws of the State of New Jersey and having its principal office in the City of Newark New Jersey, does hereby constitute and appoint

KELLY J BROOKS, KENNETH L MEYER

Houston, TX

its true and lawful attorney(s)-in-fact to execute seal and deliver for and on its behalf as surety, any and all bonds and undertakings, contracts of indemnity and other writings obligatory in the nature thereof, which are or may be allowed, required or permitted by law, stature, rule, regulation, contract or otherwise, and the execution of such instrument(s) in pursuance of these presents shall be as binding upon the said **INTERNATIONAL FIDELITY INSURANCE COMPANY**, as fully and amply, to all intents and purposes, as if the same had been duly executed and acknowledged by its regularly elected officers at its principal office

This Power of Attorney is executed, and may be revoked, pursuant to and by authority of Article 3-Section 3, of the By-Laws adopted by the Board of Directors of **INTERNATIONAL FIDELITY INSURANCE COMPANY** at a meeting called and held on the 7th day of February, 1974

The President or any Vice President, Executive Vice President, Secretary or Assistant Secretary, shall have power and authority

(1) To appoint Attorneys-in-fact, and to authorize them to execute on behalf of the Company, and attach the Seal of the Company thereto, bonds and undertakings, contracts of indemnity and other writings obligatory in the nature thereof and,

(2) To remove, at any time, any such attorney-in-fact and revoke the authority given

Further this Power of Attorney is signed and sealed by facsimile pursuant to resolution of the Board of Directors of said Company adopted at a meeting duly called and held on the 29th day of April 1982 of which the following is a true excerpt

Now therefore the signatures of such officers and the seal of the Company may be affixed to any such power of attorney or any certificate relating thereto by facsimile, and any such power of attorney or certificate bearing such facsimile signatures or facsimile seal shall be valid and binding upon the Company and any such power so executed and certified by facsimile signatures and facsimile seal shall be valid and binding upon the Company in the future with respect to any bond or undertaking to which it is attached

INTERNATIONAL FIDELITY INSURANCE COMPANY CORPORATE SEAL 1904 NEW JERSEY

IN TESTIMONY WHEREOF, **INTERNATIONAL FIDELITY INSURANCE COMPANY** has caused this instrument to be signed and its corporate seal to be affixed by its authorized officer, this 16th day of October, A D 2007

INTERNATIONAL FIDELITY INSURANCE COMPANY

STATE OF NEW JERSEY
County of Essex

Secretary

On this 16th day of October 2007, before me came the individual who executed the preceding instrument, to me personally known, and, being by me duly sworn, said the he is the therein described and authorized officer of the **INTERNATIONAL FIDELITY INSURANCE COMPANY**, that the seal affixed to said instrument is the Corporate Seal of said Company, that the said Corporate Seal and his signature were duly affixed by order of the Board of Directors of said Company

CATHY VAZQUEZ NOTARY PUBLIC STATE OF NEW JERSEY

IN TESTIMONY WHEREOF, I have hereunto set my hand affixed my Official Seal, at the City of Newark, New Jersey the day and year first above written

A NOTARY PUBLIC OF NEW JERSEY
My Commission Expires March 27, 2014

CERTIFICATION

I, the undersigned officer of **INTERNATIONAL FIDELITY INSURANCE COMPANY** do hereby certify that I have compared the foregoing copy of the Power of Attorney and affidavit, and the copy of the Section of the By-Laws of said Company as set forth in said Power of Attorney with the ORIGINALS ON IN THE HOME OFFICE OF SAID COMPANY, and that the same are correct transcripts thereof and of the whole of the said originals and that the said Power of Attorney has not been revoked and is now in full force and effect

IN TESTIMONY WHEREOF I have hereunto set my hand this **22nd** day of **November** **,2011**

Assistant Secretary

IMPORTANT NOTICE

TO OBTAIN INFORMATION OR MAKE A COMPLAINT

You may call International Fidelity Insurance Company's toll-free telephone number for information or to make a complaint at

800-333-4167

You may also write to International Fidelity Insurance Company at

Attn· Claims Department
One Newark Center, 20th Floor
Newark, NJ 07102

You may contact the Texas Department of Insurance to obtain information on companies, coverages, rights or complaints at:

800-252-3439

You may write the Texas Department of Insurance at:

P.O. Box 149104
Austin, TX 78714-9104
Fax: (512) 475-1771
Web. http //www tdi state tx us
E-mail. ConsumerProtection@tdi state tx us

PREMIUM OR CLAIM DISPUTES.
Should you have a dispute concerning your premium or about a claim you should contact your Agent or International Fidelity Insurance Company first If the dispute is not resolved, you may contact the Texas Department of Insurance

ATTACH THIS NOTICE TO YOUR BOND
This notice is for information only and does not become a part or a condition of the attached document and is given to comply with Texas legal and regulatory requirements

CRESCENT

Since 1946

Quality Work By Qualified Workers

PROPOSAL

Submit To LJA ENGINEERING

PROJECT 0384-9003E
SANTA FE HIGH GENSET
Date November 22, 2011

PRICE $ 1,457,565 00
TAX NOT INCLUDED

DESCRIPTION OF WORK

PROVIDE MATERIAL, LABOR EQUIPMENT, AND SUPERVISION FOR THE FOLLOWING,

Provide as follows,
Kohler generator set with service entrance rated **NEMA 3R STAINLESS** transfer switches (Nema 4x as specified, is not available due to size of equipment)
Cement pad for generator, fuel tanks, fuel management, and transfer switches as shown on plans
New transformer pad with (8) bollards, and modifications to current primary conduit
(14) runs of 4" conduit with (4) 750 mcm **TYPE XHHW** conductors as specified from new transformer pad to new transfer switches near new fuel tanks
(18) runs of 4" conduit with (4) 500 mcm **TYPE XHHW** conductors as specified from new transfer switches to a custom built stainless steel dual buss 3000a/4000a tap box , which will be installed over the top of the existing transformer pad, once it has been removed
Existing cables will be extended as required to the new tap box bussing, using compression splice sleeves and shrink type insulator sleeves
Run power for mini power zone and block heater to new generator, and provide breakers for existing gear
Fuel tanks will be fueled with road diesel, not red diesel, per addenda requirements
Provide local lightning protection for genset, tanks and fencing
Conduit will be installed underground per NEC and ditches **will not** exceed 4ft 6" in depth, due to OSHA requirements for shoring at 5ft depth

ALTERNATE FOR PLACING NEW TRANSFER SWITCHES ON RAISED PLATFORM WHERE EXISTING TRANSFORM IS CURRENTLY LOCATED

We will place both transfer switches on the existing transformer pad and extend existing feeders to new gear at this location This will place the gear in the fenced in area that currently encloses the existing transformer It will be better protected from wind and blown rain during hurricane conditions, than sitting out in the open The large cement pad for the generator can be decreased in size by approximately 11 feet in width, taking up less area in an already small area There will be a raised platform with walkway and stair access Less feeder lengths, less exposure to driven wind and rain, and away from fuel area in case of disaster Less cost and a neater package
COST FOR THIS ALTERNATE IS -$1,337,926 00 (Saving $119,600 00)

CLARIFIERS- for base and alternate work
All trenching based upon not exceeding 4ft-6" deep, with exception of the Centerpoint primary, which is shored for the rework Unforeseen underground obstacles or utilities that require reroute, of duct banks or utilities, will be at additional costs Outages will need to be planned for times when school is out, as Centerpoint has given you the cost based upon straight time without overtime The project is based upon straight time 40 hrs / week We will run cables from the new transformer to the existing rollup switch for feeding the school during construction This is the only temp feed we are providing One half of the receiving area driveway will be cut and repoured at a time and will be barricaded off during construction We will repour one side and then demo out the other At some point the school will have to relocate their dumpsters during the construction phase We will employ a fuel system contractor for fuel system installation as specified Any system not indicated on plans will be at additional costs

THANK YOU,
CHRIS HINES- PM

P O Box 36 1319 First Street La Marque Texas 77568-0036 Phone (409) 935-2416 FAX (409) 935 2428

VI

CONTRACT AWARD

CONTRACT AWARD

CONTRACT FOR:
SANTA FE HIGH SCHOOL GENERATOR

THIS CONTRACT IS ENTERED INTO BETWEEN GALVESTON COUNTY AND THE CONTRACTOR NAMED BELOW PURSUANT TO SUBCHAPTER B, CHAPTER 271, TEXAS LOCAL GOVERNMENT CODE, AND THE REFERENCED INVITATION TO BID

Contract No _____

Bid No B111056

Contractor Crescent Engineering Co , Inc. dba Crescent Electric

The Specifications and Drawings are enumerated as follows

Standard Specifications

DIVISION 1 - GENERAL REQUIREMENTS

Submittals	01300 - 1-5
Schedule of Values	01370 - 1-1
Testing Laboratory Services	01410 - 1-3
Protection of Environment	01560 - 1-2
Control of Ground Water and Surface Water	01563 - 1-6
Cleaning	01710 - 1-2
Project Record Documents	01720 - 1-2
Operation and Maintenance (O&M) Data	01730 - 1-5

DIVISION 2 - SITE WORK

Site Preparation	02100 - 1-2
Site Grading	02210 - 1-3
Structural Excavation and Backfilling	02220 - 1 4
Trenching, Bedding and Backfill for Utilities	02227 - 1-5
Bedding and Backfill Material	02251 - 1-6
Cement Stabilized Sand	02252 - 1-2
Chain Link Fences and Gates	02831 - 1-4
Topsoil	02920 - 1-1
Hydromulch Seeding	02921 - 1-3

DIVISION 3 - CONCRETE

Concrete Reinforcement	03200 - 1-4
Cast-In-Place Concrete	03300A - 1-9

DIVISION 16 – ELECTRICAL

General Electrical Provisions	16010 - 1-4
Electrical Basic Materials and Methods	16020 - 1-15
Automatic Transfer Switch	16046 - 1-9
Electrical Identification	16195 - 1-9
Standby Diesel Engine Generator	16210 - 1-16
Grounding	16452 - 1-8

Special Provisions

Special Items

DRAWINGS Santa Fe High School Generator, Sheets 1 - 10

ADDENDA Nos 1, 2, 3, 4, 5, 6, 7 and 8

Contract Award (continued)

Sections I (Invitation to Bid), II (General Provisions), III (Vendor Qualification Packet), IV-A (Instruction To Bidders), IV-B (TXCDBG -Instructions to Bidders For Construction), V (Bid Proposal), VI (Contract Award), VII (TXCDBG Terms and Conditions), VIII (Texas Workers' Compensation), IX (Special Terms and Conditions), [including Addenda], X (General Terms and Conditions), XI (TXCDBG -General Contract Conditions For Construction), XII (Federal Labor Standard Provisions), XIII (TXCDBG -Contractor's Local Opportunity Plan and Proposed Contractor's Breakdown), XIV (TXCDBG -Attorney's Review Certification), XV (TXCDBG -Certification of Section 3), XVI Copeland Act and Certification Regarding Lobbying), XVII (TXCDBG -Statement of Bidder's Qualifications, Contractor Certification and Section 504 Certification), XVIII (TXCDBG -Noncollusion Affidavit Of Prime Bidder), XIX (Project Sign), and XX (Technical Specifications) attached to this Contract Award are all made a part of this Contract and collectively evidence and constitute the entire contract Contractor shall furnish all materials, perform all of the work required to be done and do everything else required by these documents

Time of Completion The Contractor shall complete the work within 180 Calendar Days of the issuance of the notice to proceed The time set forth for completion of the work is an essential element of the Contract

The Contract Sum The County shall pay the Contractor for performance of the Contract, the sum of One Million, Four Hundred Fifty Seven Thousand, Five Hundred Sixty Five Dollars and No/100 ($1,457,565 00) payments to be made as described herein

Performance Bond required (x) yes ( ) no
Payment Bond required (x) yes ( ) no

This Contract is issued pursuant to award made by Commissioners' Court on January 24, 2012

EXECUTED this 9th day of August, 2012

COUNTY OF GALVESTON, TEXAS

BY _____
Mark Henry, County Judge

ATTEST _____
Dwight Sullivan, County Clerk

CONTRACTOR
Crescent Engineering Co., Inc dba Crescent Electric
BY _____ President
Signature – Title
Clarence Broze Jr
Printed Name

TEXAS STATUTORY PERFORMANCE BOND
Pursuant to Chapter 2253 of the Texas Government Code
As Amended By The 73rd Texas Legislature, 1993

(McGregor Act – Public Works)
(Penalty of this bond must be 100% of Contract Amount)

Bond No 0584188

KNOW ALL MEN BY THESE PRESENTS

That Crescent Engineering, Inc dba Crescent Electric hereinafter called "Principal" and International Fidelity Insurance Company, a corporation organized and existing under the laws of the State of New Jersey, with its principal office in the City of Newark (hereinafter called Surety), as Surety, are held and firmly bound unto County of Galveston, (hereinafter called Obligee), in the amount of One Million Four Hundred Fifty Seven Thousand Five Hundred Sixty Five and no/100---- ($ 1,457,565 00--) Dollars, for payment whereof, the said Principal and Surety bind themselves, and their heirs, administrators, executors, successors and assigns jointly and severally, by these presents

WHEREAS, the Principal has entered into a certain Contract with Obligee dated the _____ day at _____, 20___, to CDBG Round 1 - Santa Fe High School Generator which said Contract is hereby referred to and made a part hereof as fully and to the same extent as if copied at length herein

NOW THEREFORE, THE CONDITION OF THIS OBLIGATION IS SUCH, that if the Principal shall faithfully perform the work in accordance with the plans specifications and contract documents, then this obligation shall be void, otherwise to remain in full force and effect

PROVIDED, HOWEVER, that this bond is executed pursuant to the provisions of Chapter 2253 of the Texas Government Code as amended by Acts of the 73rd legislature, 1993, and all liabilities on this bond shall be determined in accordance with the provisions of said Chapter to the same extent as if it were copied at length herein

IN WITNESS WHEREOF, the parties hereto have executed this instrument of the 4th day of April 2012

Crescent Engineering, Inc dba Crescent Electric
Principal

By [signature]

Witness _____
(If Individual or Firm)

Attest [signature]
(If Corporation)

International Fidelity Insurance Company
Surety

[signature]
Kenneth L Meyer Attorney-In-Fact

Tel (973) 624-7200

POWER OF ATTORNEY
INTERNATIONAL FIDELITY INSURANCE COMPANY

HOME OFFICE· ONE NEWARK CENTER, 20TH FLOOR
NEWARK, NEW JERSEY 07102-5207

KNOW ALL MEN BY THESE PRESENTS· That **INTERNATIONAL FIDELITY INSURANCE COMPANY,** a corporation organized and existing laws of the State of New Jersey, and having its principal office in the City of Newark, New Jersey, does hereby constitute and appoint

KELLY J BROOKS, KENNETH L MEYER

Houston, TX

its true and lawful attorney(s)-in-fact to execute, seal and deliver for and on its behalf as surety, any and all bonds and undertakings, contracts of indemnity and other writings obligatory in the nature thereof, which are or may be allowed, required or permitted by law, stature, rule, regulation, contract or otherwise, and the execution of such instrument(s) in pursuance of these presents, shall be as binding upon the said **INTERNATIONAL FIDELITY INSURANCE COMPANY**, as fully and amply, to all intents and purposes, as if the same had been duly executed and acknowledged by its regularly elected officers at its principal office

This Power of Attorney is executed, and may be revoked, pursuant to and by authority of Article 3-Section 3, of the By-Laws adopted by the Board of Directors of **INTERNATIONAL FIDELITY INSURANCE COMPANY** at a meeting called and held on the 7th day of February, 1974

The President or any Vice President, Executive Vice President, Secretary or Assistant Secretary, shall have power and authority

(1) To appoint Attorneys-in-fact, and to authorize them to execute on behalf of the Company, and attach the Seal of the Company thereto, bonds and undertakings, contracts of indemnity and other writings obligatory in the nature thereof and,

(2) To remove, at any time, any such attorney-in-fact and revoke the authority given

Further, this Power of Attorney is signed and sealed by facsimile pursuant to resolution of the Board of Directors of said Company adopted at a meeting duly called and held on the 29th day of April, 1982 of which the following is a true excerpt

Now therefore the signatures of such officers and the seal of the Company may be affixed to any such power of attorney or any certificate relating thereto by facsimile, and any such power of attorney or certificate bearing such facsimile signatures or facsimile seal shall be valid and binding upon the Company and any such power so executed and certified by facsimile signatures and facsimile seal shall be valid and binding upon the Company in the future with respect to any bond or undertaking to which it is attached

INTERNATIONAL FIDELITY INSURANCE COMPANY CORPORATE SEAL 1904 NEW JERSEY

IN TESTIMONY WHEREOF, **INTERNATIONAL FIDELITY INSURANCE COMPANY** has caused this instrument to be signed and its corporate seal to be affixed by its authorized officer, this 16th day of October, A D 2007

INTERNATIONAL FIDELITY INSURANCE COMPANY

STATE OF NEW JERSEY
County of Essex

Secretary

On this 16th day of October 2007, before me came the individual who executed the preceding instrument, to me personally known, and, being by me duly sworn, said the he is the therein described and authorized officer of the **INTERNATIONAL FIDELITY INSURANCE COMPANY,** that the seal affixed to said instrument is the Corporate Seal of said Company, that the said Corporate Seal and his signature were duly affixed by order of the Board of Directors of said Company

CATHY VAZQUEZ NOTARY PUBLIC STATE OF NEW JERSEY

IN TESTIMONY WHEREOF, I have hereunto set my hand affixed my Official Seal, at the City of Newark, New Jersey the day and year first above written

A NOTARY PUBLIC OF NEW JERSEY
My Commission Expires March 27, 2014

CERTIFICATION

I, the undersigned officer of **INTERNATIONAL FIDELITY INSURANCE COMPANY** do hereby certify that I have compared the foregoing copy of the Power of Attorney and affidavit, and the copy of the Section of the By-Laws of said Company as set forth in said Power of Attorney, with the ORIGINALS ON IN THE HOME OFFICE OF SAID COMPANY, and that the same are correct transcripts thereof, and of the whole of the said originals, and that the said Power of Attorney has not been revoked and is now in full force and effect.

INTERNATIONAL FIDELITY INSURANCE COMPANY 1904 NEW JERSEY

IN TESTIMONY WHEREOF, I have hereunto set my hand this day

Assistant Secretary

IMPORTANT NOTICE

TO OBTAIN INFORMATION OR MAKE A COMPLAINT:

You may call International Fidelity Insurance Company's toll-free telephone number for information or to make a complaint at:

281-681-3900

You may also write to International Fidelity Insurance Company at:

Attn: Mike Kremheller
24900 Pitkin Rd., Suite 145
Spring, Texas 77386

You may contact the Texas Department of Insurance to obtain information on companies, coverages, rights or complaints at:

800-252-3439

You may write the Texas Department of Insurance at:

P.O. Box 149104
Austin, TX 78714-9104

ATTACH THIS NOTICE TO YOUR BOND. This notice is for information only and does not become a part or a condition of the attached document and is given to comply with Section 2253.048, Government Code, and Section 53.202, Property Code, effective September 1, 2001.

TEXAS STATUTORY PAYMENT BOND
Pursuant to Chapter 2253 of the Texas Government Code
As Amended By The 73rd Texas Legislature, 1993

(McGregor Act – Public Works)
(Penalty of this bond must be 100% of Contract Amount)

Bond No 0584188

KNOW ALL MEN BY THESE PRESENTS.

That Crescent Engineering, Inc dba Crescent Electric hereinafter called "Principal" and International Fidelity Insurance Company a corporation organized and existing under the laws of the State of New Jersey, with its principal office in the City of Newark (hereinafter called Surety), as Surety are held and firmly bound unto County of Galveston, (hereinafter called Obligee), in the amount of, One Million Four Hundred Fifty Seven Thousand Five Hundred Sixty Five and no/100---- ($ 1,457,565 00--) Dollars, for payment whereof, the said Principal and Surety bind themselves, and their heirs, administrators executors, successors and assigns, jointly and severally, by these presents

WHEREAS, the Principal has entered into a certain Contract with Obligee, dated the _____ day at _____, 20___ to CDBG Round 1 - Santa Fe High School Generator which said Contract is hereby referred to and made a part hereof as fully and to the same extent as if copied at length herein

NOW THEREFORE, the condition of this obligation is such that if the Principal shall pay all claimants supplying labor and material to him or a subcontractor in the prosecution of the work provided for in said Contract and any extension or modification thereof, then this obligation shall be void, otherwise, to remain in full force and effect

Provided however that this bond is executed pursuant to the provisions of Chapter 2253 of the Texas Government Code as amended by Acts for the 73rd legislature, 1993, and all liabilities on this bond to such claimants shall be determined in accordance with the provisions of said Chapter to the same extent as if it were copied at length herein

IN WITNESS WHEREOF the parties hereto have executed this instrument of the 4th day of April 2012

Crescent Engineering, Inc dba Crescent Electric
Principal

By [signature]

Witness _____
(If Individual or Firm)

Attest [signature]
(If Corporation)

International Fidelity Insurance Company
Surety

[signature]
Kenneth L Meyer Attorney-In-Fact

Tel (973) 624-7200

POWER OF ATTORNEY
INTERNATIONAL FIDELITY INSURANCE COMPANY

HOME OFFICE· ONE NEWARK CENTER, 20TH FLOOR
NEWARK, NEW JERSEY 07102-5207

KNOW ALL MEN BY THESE PRESENTS That **INTERNATIONAL FIDELITY INSURANCE COMPANY,** a corporation organized and existing laws of the State of New Jersey, and having its principal office in the City of Newark, New Jersey, does hereby constitute and appoint

KELLY J BROOKS, KENNETH L MEYER

Houston, TX

its true and lawful attorney(s)-in-fact to execute, seal and deliver for and on its behalf as surety, any and all bonds and undertakings, contracts of indemnity and other writings obligatory in the nature thereof, which are or may be allowed, required or permitted by law, stature, rule, regulation, contract or otherwise, and the execution of such instrument(s) in pursuance of these presents, shall be as binding upon the said **INTERNATIONAL FIDELITY INSURANCE COMPANY** as fully and amply, to all intents and purposes, as if the same had been duly executed and acknowledged by its regularly elected officers at its principal office

This Power of Attorney is executed, and may be revoked, pursuant to and by authority of Article 3-Section 3, of the By-Laws adopted by the Board of Directors of **INTERNATIONAL FIDELITY INSURANCE COMPANY** at a meeting called and held on the 7th day of February, 1974

The President or any Vice President, Executive Vice President, Secretary or Assistant Secretary, shall have power and authority

(1) To appoint Attorneys-in-fact, and to authorize them to execute on behalf of the Company, and attach the Seal of the Company thereto, bonds and undertakings, contracts of indemnity and other writings obligatory in the nature thereof and,

(2) To remove, at any time, any such attorney-in-fact and revoke the authority given

Further, this Power of Attorney is signed and sealed by facsimile pursuant to resolution of the Board of Directors of said Company adopted at a meeting duly called and held on the 29th day of April, 1982 of which the following is a true excerpt

Now therefore the signatures of such officers and the seal of the Company may be affixed to any such power of attorney or any certificate relating thereto by facsimile, and any such power of attorney or certificate bearing such facsimile signatures or facsimile seal shall be valid and binding upon the Company and any such power so executed and certified by facsimile signatures and facsimile seal shall be valid and binding upon the Company in the future with respect to any bond or undertaking to which it is attached

INTERNATIONAL FIDELITY INSURANCE COMPANY CORPORATE SEAL 1904 NEW JERSEY

IN TESTIMONY WHEREOF, **INTERNATIONAL FIDELITY INSURANCE COMPANY** has caused this instrument to be signed and its corporate seal to be affixed by its authorized officer, this 16th day of October, A D 2007

INTERNATIONAL FIDELITY INSURANCE COMPANY

STATE OF NEW JERSEY
County of Essex

Secretary

On this 16th day of October 2007, before me came the individual who executed the preceding instrument, to me personally known, and, being by me duly sworn, said the he is the therein described and authorized officer of the **INTERNATIONAL FIDELITY INSURANCE COMPANY**, that the seal affixed to said instrument is the Corporate Seal of said Company, that the said Corporate Seal and his signature were duly affixed by order of the Board of Directors of said Company

CATHY VAZQUEZ NOTARY PUBLIC STATE OF NEW JERSEY

IN TESTIMONY WHEREOF, I have hereunto set my hand affixed my Official Seal, at the City of Newark, New Jersey the day and year first above written

A NOTARY PUBLIC OF NEW JERSEY
My Commission Expires March 27, 2014

CERTIFICATION

I, the undersigned officer of **INTERNATIONAL FIDELITY INSURANCE COMPANY**, do hereby certify that I have compared the foregoing copy of the Power of Attorney and affidavit, and the copy of the Section of the By-Laws of said Company as set forth in said Power of Attorney, with the ORIGINALS ON IN THE HOME OFFICE OF SAID COMPANY, and that the same are correct transcripts thereof, and of the whole of the said originals, and that the said Power of Attorney has not been revoked and is now in full force and effect.

INTERNATIONAL FIDELITY INSURANCE COMPANY 1904 NEW JERSEY

IN TESTIMONY WHEREOF, I have hereunto set my hand this day of

Assistant Secretary

IMPORTANT NOTICE

TO OBTAIN INFORMATION OR MAKE A COMPLAINT:

You may call International Fidelity Insurance Company's toll-free telephone number for information or to make a complaint at:

281-681-3900

You may also write to International Fidelity Insurance Company at:

Attn: Mike Kremheller
24900 Pitkin Rd., Suite 145
Spring, Texas 77386

You may contact the Texas Department of Insurance to obtain information on companies, coverages, rights or complaints at:

800-252-3439

You may write the Texas Department of Insurance at:

P.O. Box 149104
Austin, TX 78714-9104

ATTACH THIS NOTICE TO YOUR BOND. This notice is for information only and does not become a part or a condition of the attached document and is given to comply with Section 2253.048, Government Code, and Section 53.202, Property Code, effective September 1, 2001.

VII

TXCDBG
TERMS AND CONDITIONS

TERMS AND CONDITIONS

PROFESSIONAL MANAGEMENT, ENGINEERING AND/OR ARCHITECTURAL SERVICES

1 Termination of Contract for Cause If, through any cause, the Firm shall fail to fulfill in a timely and proper manner his/her obligations under this Contract, or if the Firm shall violate any of the covenants, agreements, or stipulations of this Contract, the City/County shall thereupon have the right to terminate this Contract by giving written notice to the Firm of such termination and specifying the effective date thereof, at least five days before the effective date of such termination In such event, all finished or unfinished documents, data, studies, surveys, drawings, maps, models, photographs and reports prepared by the Firm under this Contract shall, at the option of the City/County, become its property and the Firm shall be entitled to receive just and equitable compensation for any work satisfactorily completed hereunder

Notwithstanding the above, the Firm shall not be relieved of liability to the City/County for damages sustained by the City/County by virtue of any breach of the Contract by the Firm, and the City/County may withhold any payments to the Firm for the purpose of set-off until such time as the exact amount of damages due the City/County from the Firm is determined

2 Termination for Convenience of the City/County The City/County may terminate this Contract at any time by giving at least ten (10) days notice in writing to the Firm If the Contract is terminated by the City/County as provided herein, the Firm will be paid for the time provided and expenses incurred up to the termination date If this Contract is terminated due to the fault of the Firm, Paragraph 1 hereof relative to termination shall apply

3 Changes The City/County may, from time to time, request changes in the scope of the services of the Firm to be performed hereunder Such changes, including any increase or decrease in the amount of the Firm's compensation, which are mutually agreed upon by and between the City/County and the Firm, shall be incorporated in written amendments to this Contract

4 Personnel

a The Firm represents that he/she has, or will secure at his own expense, all personnel required in performing the services under this Contract Such personnel shall not be employees of or have any contractual relationship with the City/County

b All of the services required hereunder will be performed by the Firm or under his/her supervision and all personnel engaged in the work shall be fully qualified and shall be authorized or permitted under State and Local law to perform such services

c None of the work or services covered by this Contract shall be subcontracted without the prior written approval of the City/County Any work or services subcontracted hereunder shall be specified by written contract or agreement and shall be subject to each provision of this Contract

5 Assignability The Firm shall not assign any interest on this Contract, and shall not transfer any interest in the same (whether by assignment or novation), without the prior written consent of the City/County thereto Provided, however, that claims for money by the Firm from the City/County under this Contract may be assigned to a bank, trust company, or other financial institution without such approval Written notice of any such assignment or transfer shall be furnished promptly to the City/County

6 Reports and Information The Firm, at such times and in such forms as the City/County may require, shall furnish the City/County such periodic reports as it may request pertaining to the work or services undertaken pursuant to this Contract, the costs and obligations incurred or to be incurred in connection therewith, and any other matters covered by this Contract

7 Records and Audits The Firm shall insure that the City/County maintains fiscal records and supporting

documentation for all expenditures of funds made under this contract in a manner which conforms to OMB Circular A-87, Section 570 490 of the Regulations, and this Contract Such records must include data on the racial, ethnic, and gender characteristics of persons who are applicants for, participants in, or beneficiaries of the funds provided under this Contract City/County shall retain such records, and any supporting documentation, for the greater of three years from closeout of the Contract or the period required by other applicable laws and regulations

8 Findings Confidential All of the reports, information, data, etc , prepared or assembled by the Firm under this contract are confidential and the Firm agrees that they shall not be made available to any individual or organization without the prior written approval of the City/County

9 Copyright No report, maps, or other documents produced in whole or in part under this Contract shall be the subject of an application for copyright by or on behalf of the Firm

10 Compliance with Local Laws The Firm shall comply with all applicable laws, ordinances and codes of the State and local governments, and the Firm shall save the City/County harmless with respect to any damages arising from any tort done in performing any of the work embraced by this Contract

11 Equal Employment Opportunity During the performance of this Contract, the Firm agrees as follows

a The Firm will not discriminate against any employee or applicant for employment because of race, creed, sex, color, handicap or national origin The Firm will take affirmative action to ensure that applicants are employed, and that employees are treated during employment, without regard to their race, creed, sex, color, handicap or national origin Such action shall include, but not be limited to, the following Employment, upgrading, demotion, or transfer, recruitment or recruitment advertising, layoff or termination, rates of pay or other forms of compensation, and selection for training, including apprenticeship The Firm agrees to post in conspicuous places, available to employees and applicants for employment, notices to be provided by the City/County setting forth the provisions of this non-discrimination clause

b The Firm will, in all solicitation or advertisements for employees placed by or on behalf of the Firm, state that all qualified applicants will receive consideration for employment without regard to race, creed, color, sex, handicap or national original

c The Firm will cause the foregoing provisions to be inserted in all subcontracts for any work covered by this Contract so that such provisions will be binding upon each subcontractor, provided that the foregoing provisions shall not apply to contracts or subcontracts for standard commercial supplies or raw materials

d The Firm will include the provisions a through c in every subcontract or purchase order unless exempted

12 Civil Rights Act of 1964 Under Title VI of the Civil Rights Act of 1964, no person shall, on the grounds of race, color, or national origin, be excluded from participation in, be denied the benefits of, or be subjected to discrimination under any program or activity receiving Federal financial assistance

13 Section 109 of the Housing and Community Development Act of 1974

a No person in the United States shall on the ground of race, color, national origin, or sex be excluded from participation in, be denied the benefits of, or be subjected to discrimination under any program or activity funded in whole or in part with funds made available under this title

14 "Section 3" Compliance in the Provision of Training, Employment and Business Opportunities

a The work to be performed under this contract is on a project assisted under a program providing direct Federal financial assistance from the Department of Housing and Urban Development and is subject to the requirements of Section 3 of the Housing and Urban Development Act of 1968, as amended, 12 U S C 1701u Section 3 requires that to the greatest extent feasible opportunities for training and

employment be given lower income residents of the project area and contracts for work in connection with the project be awarded to business concerns which are located in, or owned in substantial part by persons residing in the area of the project

b The parties to this contract will comply with the provisions of said Section 3 and the regulations issued pursuant thereto by the Secretary of Housing and Urban Development set forth in 24 C F R 235, and all applicable rules and orders of the Department issued thereunder prior to the execution of this Contract The parties to this Contract certify and agree that they are under no contractual or other disability which would prevent them from complying with these requirements

c The contractor will send to each labor organization or representative of workers with which he/she has a collective bargaining agreement or other contract or understanding, if any, a notice advising the said labor organization or workers' representative of his/her commitments under this Section 3 clause and shall post copies of the notice in conspicuous places available to employees and applicants for employment or training

d The contractor will include this Section 3 clause in every subcontract for work in connection with the project and will, at the direction of the applicant for or recipient of Federal financial assistance, take appropriate action pursuant to the subcontract upon a finding that the subcontractor is in violation of regulations issued by the Secretary of Housing and Urban Development, 24 C.F R Part 135 The contractor will not subcontract with any subcontractor where it has notice or knowledge that the latter has been found in violation of regulations under 24 C F R Part 135 and will not let any subcontract unless the subcontractor has first provided it with a preliminary statement of ability to comply with the requirements of these regulations

e Compliance with the provisions of Section 3, the regulations set forth in 24 C F R Part 135, and all applicable rules and orders of the Department issued hereunder prior to the execution of the contract, shall be a condition of the federal financial assistance provided to the project, binding upon the applicant or recipient for such assistance, its successors and assigns Failure to fulfill these requirements shall subject the applicant or recipient, its contractors and subcontractors, its successors and assigns to those sanctions specified by the grant or loan agreement or contract through which federal assistance is provided, and to such sanctions as are specified by 24 C F R Part 135

15 Section 503 Handicapped (if $2,500 or Over) Affirmative Action for Handicapped Workers

a The contractor will not discriminate against any employee or applicant for employment because of physical or mental handicap in regard to any position for which the employee or applicant for employment is qualified The contractor agrees to take affirmative action to employ, advance in employment and otherwise treat qualified handicapped individuals without discrimination based upon their physical or mental handicap in all employment practices such as the following Employment, upgrading, demotion or transfer, recruitment,advertising, layoff or termination, rates of pay or other forms of compensation, and selection for training, including apprenticeship

b The contractor agrees to comply with the rules, regulations, and relevant orders of the Secretary of Labor issued pursuant to the Act

c In the event of the contractor's non-compliance with the requirements of this clause, actions for non-compliance may be taken in accordance with the rules, regulations, and relevant orders of the Secretary of Labor issued pursuant to the Act

d The contractor agrees to post in conspicuous places, available to employees and applicants for employment, notices in a form to be prescribed by the Director, provided by or through the contracting officer Such notices shall state the contractor's obligation under the law to take affirmative action to employ and advance in employment qualified handicapped employees and applicants for employment, and the rights of applicants and employees

e The contractor will notify each labor union or representative of workers with which it has a collective bargaining agreement or other contract understanding, that the contractor is bound by the terms of

Section 503 of Rehabilitation Act of 1973, and is committed to take affirmative action to employ and advance in employment physically and mentally handicapped individuals

f The contractor will include the provisions of this clause in every subcontract or purchase order of $2,500 or more unless exempted by rules, regulations, or orders of the Secretary issued pursuant to Section 503 of the Act, so that such provisions will be binding upon each subcontractor with respect to any subcontract or purchase order as the Director of the Office of Federal Contract Compliance Programs may direct to enforce such provisions, including action for non-compliance

16 Interest of Members of a City/County No member of the governing body of the City/County and no other officer, employee, or agent of the City/County who exercises any functions or responsibilities in connection with the planning and carrying out of the program, shall have any personal financial interest, direct or indirect, in this Contract and the Firm shall take appropriate steps to assure compliance

17 Interest of Other Local Public Officials No member of the governing body of the Locality and no other public official of such Locality, who exercises any functions or responsibilities in connection with the planning and carrying out of the program, shall have any personal financial interest, direct or indirect, in this Contract, and the Firm shall take appropriate steps to assure compliance

18 Interest of Firm and Employees The Firm covenants that he/she presently has no interest and shall not acquire interest, director indirect, in the study area or any parcels therein or any other interest which would conflict in any manner or degree with the performance of his/her services hereunder The Firm further covenants that in the performance of this Contract, no person having any such interest shall be employed

VIII

TEXAS WORKERS' COMPENSATION

in accordance with
28 TAC 110.110
DIVISION OF TEXAS WORKERS' COMPENSATION
TEXAS DEPARTMENT OF INSURANCE

28 TAC 110.110
DIVISION OF TEXAS WORKERS' COMPENSATION
TEXAS DEPARTMENT OF INSURANCE

A Definitions

Certificate of coverage ("certificate") - A copy of a certificate of insurance, a certificate of authority to self-insure issued by the Texas Department of Insurance "TDI"), or a coverage agreement showing statutory workers' compensation insurance coverage for the person's or entity's employees providing services on a project, for the duration of the project

Duration of the project - includes the time from the beginning of the work on the project until the Contractor's/person's work on the project has been completed and accepted by the governmental entity

Persons providing services on the project ("subcontractor" in Section 406 096 of the Texas Labor Code) - includes all person or entities performing all or part of the services the contractor has undertaken to perform on the project, regardless of whether that person contracted directly with the Contractor and regardless of whether that person has employees This includes, without limitation, independent contractors, subcontractors, leasing companies, motor carriers, owner-operators, employees of any such entity or employees of any entity which furnishes persons to provide services on the project "Services" include, without limitation, providing, hauling, or delivering equipment or materials, or providing labor, transportation, or other service related to a project "Services" does not include activities unrelated to the project, such as food/beverage vendors, office supply deliveries, and delivery of portable toilets.

B The Contractor shall provide coverage, based on proper reporting of classification codes and payroll amounts and filing of any coverage agreement, which meets the statutory requirements of Texas Labor Code, §401 011(44) for all employees of the Contractor providing services on the project, for the duration of the project

C. The Contractor must provide a certificate of coverage to the Owner prior to being awarded the contract

D If the coverage period shown on the Contractor's current certificate of coverage ends during the duration of the project, the Contractor must, prior to the end of the coverage period, file a new certificate of coverage with the Owner, showing that the coverage has been extended

E. The Contractor shall obtain from each person providing services on the project, and provide to the Owner

(1) a certificate of coverage, prior to that person beginning work on the project, so that the Owner will have on file certificates of coverage showing coverage for all persons providing services on the project, and

(2) no later than seven days after receipt by the Contractor, a new certificate of coverage showing extension of coverage, if the coverage period shown on the current certificate of coverage ends during the duration of the project

F The Contractor shall retain all required certificates of coverage on file for the duration of the project and for one year thereafter

G The Contractor shall notify the Owner in writing by certified mail or personal delivery, within 10 days after the Contractor knew or should have known, of any change that materially affects the provision of coverage of any person providing services on the project

H The Contractor shall post on each project site a notice, in the text, form and manner prescribed by the TDI, informing all persons providing services on the project that they are required to be covered, and stating how a person may verify current coverage and report failure to provide coverage

The sign shall include as a minimum the following

Post a notice on each project site informing all persons providing services on the project that they are required to be covered, and stating how a person may verify current coverage and report failure to provide coverage This notice does not satisfy other posting requirements imposed by the Act or other commission rules This notice must be printed with a title in at least 30 point bold type and text in at least 19 point normal type, and shall be in both English and Spanish and any other language common to the worker population. The text for the notices shall be the following text provided by the commission on the sample notice, without any additional words or changes

"REQUIRED WORKERS' COMPENSATION COVERAGE"

I The Contractor shall contractually require each person with whom it contracts to provide services on a project to

(1) Provide coverage, based on proper reporting of classification codes and payroll amounts and filing of any coverage agreements, which meets the statutory requirements of Texas Labor Code §401 011(44) for all its employees providing services on the project, for the duration of the project,

(2) provide to the contractor, prior to that person beginning work on the project, a certificate of coverage showing that coverage is being provided for all employees of the person providing services on the project, for the duration of the project;

(3) provide the Contractor, prior to the end of the coverage period, a new certificate of coverage showing extension of coverage, if the coverage period shown on the current certificate of coverage ends during the duration of the project,

(4) Obtain from each other person with whom it contracts, and provide to the Contractor

(A) a certificate of coverage, prior to the other person beginning work on the project, and

(B) a new certificate of coverage showing extension of the coverage period, prior to the end of the coverage period, if the coverage period shown on the current certificate of coverage ends during the duration of the project,

(5) retain all required certificates of coverage on file for the duration of the project and for one year thereafter,

(6) notify the Owner in writing by certified mail or personal delivery, within 10 days after the person knew or should have known, of any change that materially affects the provision of coverage of any person providing services on the project, and

(7) contractually require each other person with whom it contracts to perform as required by paragraphs (1) - (7), with the certificate of coverage to be provided to the person for whom they are providing services

J By signing this contract or providing or causing to be provided a certificate of coverage, the Contractor is representing to the Owner that all employees of the Contractor who will provide services on the project will be covered by workers' compensation coverage for the duration of the project, that the coverage will be based on proper reporting of classification codes and payroll amounts, and that all coverage agreements will be filed with the appropriate insurance carrier or, in the case of a self-insured, with the TDI's requirements and regulations Providing false or misleading information may subject the contractor to administrative penalties, criminal penalties, civil penalties, or other civil actions

K The Contractor's failure to comply with any of these provisions is a breach of contract by the Contractor which entitles the Owner to declare the contract void if the Contractor does not remedy the breach within ten days after receipt of notice of breach from the Owner

IX

SPECIAL TERMS AND CONDITIONS

SPECIAL TERMS AND CONDITIONS

CONTRACT FOR:
SANTA FE HIGH SCHOOL GENERATOR

In the event of a conflict between any provision of these Special Terms and Conditions and any other section or provision of this bid package or a contract awarded under this bid, the Special Terms and Provisions control If you need additional information, contact the Project Administrator

SCOPE:

It is the intent of these specifications to secure a contract to furnish labor, equipment, materials and incidentals as required to

Installation of Generator located at the Santa Fe High School

The work to be performed will be administered by the County's Program Administrator, who, for purposes of this Contract is

Name G Michael Fitzgerald, P E , County Engineer
Address 123 Rosenberg, Suite 4157, Galveston, Texas 77550
Telephone No (409) 770-5549

GENERAL

The Contractor will be required to make submittals on all materials for pre-delivery approval

All advance warning signs to be set two weeks prior to the start of construction activities and to remain in place until all construction activities are complete and accepted by Galveston County

For this project the contractor will furnish and maintain all barricades and warning signs, including all temporary and portable traffic control devices necessary during the various phases of construction These barricades and warning signs shall be constructed and placed in accordance with the barricades and construction standards, latest Texas MUTCD, and typical construction layouts, or as directed by the Engineer

The Contractor shall be responsible for controlling excess dust and loose rocks produced by the work The Contractor shall use methods which are reasonable and practical to control these problems

MATERIAL STORAGE

Mixing of materials, storing of materials, storing of equipment, or repairing of equipment on top of pavement or bridge decks will not be permitted unless specifically authorized by the ENGINEER Permission will be granted to store materials on subject surfaces if no damage or discoloration will result

MATERIAL HAULING

Hauling of materials will not be paid for directly, but shall be considered as subsidiary work pertaining to the respective bid items Haul routes for full and empty loads shall be restricted to State Highways Hauling of equipment is also restricted to State Highways

VERTICAL AND HORIZONTAL CONTROL

Vertical and horizontal control points will be provided by Galveston County All construction surveying and staking will be done by the contractor

MATERIALS TESTING

Galveston County will pay for and conduct materials testing for the County's benefit and use in determining whether to accept or reject the materials or finished products Contractor is responsible for assuring all materials and finished products comply with the Drawings and Specifications Test results from the County's testing will be made available to Contractor

SUSPENSION OF WORK

In case of suspension of work for any cause, the contractor shall be responsible for the preservation of all materials He shall provide suitable drainage of the roadway and shall erect temporary structures where required The contractor shall maintain the roadway in good and passable condition until final acceptance

ABATEMENT AND MITIGATION OF EXCESSIVE OR UNNECESSARY CONSTRUCTION NOISE

Throughout all phases of the construction of this project, including the moving, unloading, operating and handling of construction equipment prior to commencement of work, during the project and after the work is complete, the contractor shall make every reasonable effort to minimize the noise imposed upon the immediate neighborhood surrounding the area of construction Particular and special efforts shall be exercised by the Contractor to avoid the creation of unnecessary noise impacts on adjacent sensitive receptors in the placement of non-mobile equipment such as air compressors, generators, pumps, etc The placement of temporary parked mobile equipment with the engine running shall be such as to cause the least disruption of normal adjacent activities not associated with the work to be performed by the contractor

All equipment associated with the work shall be equipped with components designed by the manufacturer wholly or in part to suppress excessive noise and these components shall be maintained in their original operating condition considering normal depreciation Noise-attenuation devices installed by the manufacturer such as mufflers, engine covers, insulation, etc , shall not be removed nor rendered ineffectual nor be permitted
to remain off the equipment while the equipment is in use

WORKING HOURS

Work shall not be commenced by the contractor before sunrise and shall be so conducted that all equipment is off the road and safely stored by sunset Specific permission shall be obtained by the contractor from the Engineer for work during those hours between 7 00 P M and 6 00 A M of the following day

LIQUIDATED DAMAGES

Liquidated damages in the amount of Five Hundred dollars ($500 00) per day will be assessed for each day beyond the time of completion that the work is not substantially complete

TIME OF COMPLETION

Time of Completion of this project is 180 calendar days from the date of the Notice to Proceed

PIPELINE, UTILITY LOCATIONS AND CONTRACTOR RESPONSIBILITY

An effort to determine all pipelines and utilities which may impact the project has been made All known pipelines and utilities have been approximately located and shown on the plans The Contractor shall notify all utility and pipeline owners before beginning the work Additional unknown utilities and pipelines may be found Adjustments of these utilities or pipelines shall be done by others at no expense to the contractor However, the Contractor shall cooperate and coordinate his work with the adjustment

The Contractor will anticipate this in making his bid The contractor will not be allowed claims for damages or delays for these adjustments should they be necessary However, additional time will be considered for the contract period

This action, however, shall in no way be interpreted as relieving the Contractor of his responsibilities under the terms of the contract as set out in the plans and specifications The Contractor shall repair any damage to the facilities caused by his operations at the Contractor's expense and shall restore facilities to service in a timely manner

BUILDER'S RISK INSURANCE

Builder's Risk Insurance and Professional Liability Insurance will not be required for this project

EXPERIENCE

All bidders must have done a like project within the last two years

EXCESS, WASTE MATERIAL AND DEBRIS

All excess material, waste material and debris shall become the property of the Contractor and shall be properly disposed of off-site No separate payment shall be made for same

LABOR AND EQUIPMENT

All labor and equipment furnished by the contractor will be considered subsidiary to the various bid items and will not be paid for directly

FIELD OFFICE

For this project the Contractor will/will not have to provide a field office

INCIDENTALS

All items of work required under this contract not specifically called for in the proposal as pay items shall be considered incidental to the various bid items and no separate payment shall be made for same

FLAGMEN

During certain phases of construction flagmen will be required to direct and control traffic This work will not be paid for directly, but shall be considered incidental to Item 502, "Barricades, Signs and Traffic Handling"

SPECIAL REQUIREMENTS:

1) The attached schedule of wages per hour for this Contract follow

General Decision Number TX120094 01/06/2012 TX94

Superseded General Decision Number TX20100123

State Texas

Construction Type Heavy

County Galveston County in Texas

HEAVY CONSTRUCTION PROJECTS Including Water and Sewer Lines
(Does Not Include Flood Control)

Modification Number	Publication Date
0	01/06/2012

* SFTX0669-001 04/01/2011

	Rates	Fringes
SPRINKLER FITTER (Fire Sprinklers)	$ 25 40	16 00

SUTX2005-021 08/05/2005

HEAVY Including Water and Sewer Lines (Excluding Flood Control)

	Rates	Fringes
Carpenter	$ 14 38	
Cement mason/concrete finisher	$ 11 37	1 13
Electrician	$ 18 40	1 34
FORM BUILDER/FORM SETTER	$ 13 35	1 17
IRONWORKER, REINFORCING	$ 11 29	
Laborers		
Common	$ 10.70	
Landscape	$ 7 35	
Mason Tender Cement	$ 9 96	
Pipelayer	$ 10 07	
PIPEFITTER	$ 17 00	0 04
Power equipment operators		
Excavator	$ 16 74	
Backhoe	$ 13 25	
Bulldozer	$ 14 00	
Crane	$ 14 91	0 58
Front End Loader	$ 11 75	0 92
Grader	$ 12 20	1 48
Tractor	$ 12 38	1 51
TRUCK DRIVER	$ 12 28	0 98

WELDERS - Receive rate prescribed for craft performing operation to which welding is incidental

==========

Unlisted classifications needed for work not included within the scope of the classifications listed may be added after award only as provided in the labor standards contract clauses (29CFR 5 5 (a) (1) (ii))

The body of each wage determination lists the classification and wage rates that have been found to be prevailing for the cited type(s) of construction in the area covered by the wage determination The classifications are listed in alphabetical order of "identifiers" that indicate whether the particular rate is union or non-union

Union Identifiers

An identifier enclosed in dotted lines beginning with characters other than "SU" denotes that the union classification and rate have found to be prevailing for that classification Example PLUM0198-005 07/01/2011 The first four letters , PLUM, indicate the international union and the four-digit number, 0198, that follows indicates the local union number or district council number where applicable , i e , Plumbers Local 0198 The next number, 005 in the example, is an internal number used in processing the wage determination The date, 07/01/2011, following these characters is the effective date of the most current negotiated rate/collective bargaining agreement which would be July 1, 2011 in the above example

Union prevailing wage rates will be updated to reflect any changes in the collective bargaining agreements governing the rate

Non-Union Identifiers

Classifications listed under an "SU" identifier were derived from survey data by computing average rates and are not union rates, however, the data used in computing these rates may include both union and non-union data Example SULA2004-007 5/13/2010 SU indicates the rates are not union rates, LA indicates the State of Louisiana, 2004 is the year of the survey, and 007 is an internal number used in producing the wage determination A 1993 or later date, 5/13/2010, indicates the classifications and rates under that identifier were issued as a General Wage Determination on that date

Survey wage rates will remain in effect and will not change until a new survey is conducted

---

WAGE DETERMINATION APPEALS PROCESS

1) Has there been an initial decision in the matter? This can be

* an existing published wage determination
* a survey underlying a wage determination
* a Wage and Hour Division letter setting forth a position on a wage determination matter
* a conformance (additional classification and rate) ruling

On survey related matters, initial contact, including requests for summaries of surveys, should be with the Wage and Hour Regional Office for the area in which the survey was conducted because those Regional Offices have responsibility for the Davis-Bacon survey program If the response from this initial contact is not satisfactory, then the process described in 2) and 3) should be followed

With regard to any other matter not yet ripe for the formal process described here, initial contact should be with the Branch of Construction Wage Determinations Write to

Branch of Construction Wage Determinations
Wage and Hour Division
U S Department of Labor
200 Constitution Avenue, N W
Washington, DC 20210

2) If the answer to the question in 1) is yes, then an interested party (those affected by the action) can request review and reconsideration from the Wage and Hour Administrator (See 29 CFR Part 1 8 and 29 CFR Part 7) Write to

Wage and Hour Administrator
U S Department of Labor
200 Constitution Avenue, N W
Washington, DC 20210

The request should be accompanied by a full statement of the interested party's position and by any information (wage payment data, project description, area practice material, etc) that the requestor considers relevant to the issue

3) If the decision of the Administrator is not favorable, an interested party may appeal directly to the Administrative Review Board (formerly the Wage Appeals Board) Write to

Administrative Review Board
U S Department of Labor
200 Constitution Avenue, N W
Washington, DC 20210

4) All decisions by the Administrative Review Board are final

==========

END OF GENERAL DECISION

U S DEPARTMENT OF HOUSING AND URBAN DEVELOPMENT
COMMUNITY DEVELOPMENT BLOCK GRANT PROGRAM
CONTRACTOR'S CERTIFICATION

CONCERNING LABOR STANDARDS AND PREVAILING WAGE REQUIREMENTS

TO (appropriate recipient) County of Galveston	DATE 11-22-11
	PROJECT NUMBER (if any) LJA #0384-9003E Bid # B111056
C/O	PROJECT NAME Santa Fe High School Generators

1 The undersigned, having executed a contract with Galveston County for the construction of the above-identified project, acknowledges that

(a) The Labor Standards provisions are included in the aforesaid contract,

(b) Correction of any infractions of the aforesaid conditions, including infractions by any of his subcontractors and any lower tier subcontractors, is his responsibility

2 He certifies that

(a) Neither he nor any firm, partnership or association in which he has substantial interest is designated as an ineligible contractor by the Comptroller General of the United States pursuant to Section 5 6(b) of the Regulations of the Secretary of Labor, Part 5 (29 CFR, Part 5) or pursuant to Section 3(a) of the Davis-Bacon Act, as amended

(b) No part of the aforementioned contract has been or will be subcontracted to any subcontractor if such subcontractor or any firm, corporation, partnership or association in which such subcontractor has a substantial interest is designated as an ineligible contractor pursuant to any of the aforementioned regulatory or statutory provisions

3 He agrees to obtain and forward to the aforementioned recipient within ten days after the execution of any subcontract, including those executed by his subcontractors and any lower tier subcontractors, a Subcontractor's Certification Concerning Labor Standards and Prevailing Wage Requirements executed by the subcontractors

4 He certifies that

(a) The legal name and the business address of the undersigned are
Crescent Engineering Co Inc dba Crescent Electric
1319 First St.
LaMarque, TX 77568

(b) The undersigned is

(1) A SINGLE PROPRIETORSHIP	(3) A CORPORATION ORGANIZED IN THE STATE OF Texas
(2) A PARTNERSHIP	(4) OTHER ORGANIZATION (Describe)

(c) The name, title and address of the owner, partners or officers of the undersigned are

NAME	TITLE	ADDRESS
Clarence Broze Jr	President	5517 Ecret Dickinson, TX 77539

(d) The names and addresses of all other persons having a substantial interest in the undersigned, and the nature of the interest are

NAME	ADDRESS	NATURE OF INTEREST
n.a		

(e) The names, addresses and trade classifications of all other building construction contractors in which the undersigned has a substantial interest are

NAME	ADDRESS	TRADE CLASSIFICATION
n.a		

Crescent Engineering Inc dba Crescent Electric
(Contractor)

Date 11-22-11

By [signature]

CONTRACTOR'S AFFIDAVIT OF PAYMENT OF DEBTS AND CLAIMS

AIA Document G706

OWNER ☐
ARCHITECT ☐
CONTRACTOR ☐
SURETY ☐
OTHER ☐

TO (Owner)

ARCHITECT'S PROJECT NO

CONTRACT FOR

CONTRACT DATE

PROJECT
(name, address)

State of
County of

The undersigned, pursuant to Article 9 of the General Conditions of the Contract for Construction, AIA Document A201, hereby certifies that, except as listed below, he has paid in full or has otherwise satisfied all obligations for all materials and equipment furnished, for all work, labor, and services performed, and for all known indebtedness and claims against the Contractor for damages arising in any manner in connection with the performance of the Contract referenced above for which the Owner or his property might in any way be held responsible

EXCEPTIONS (If none, write "None" If required by the Owner, the Contractor shall furnish bond satisfactory to the Owner for each exception)

SUPPORTING DOCUMENTS ATTACHED HERETO

1 Consent of Surety to Final Payment Whenever Surety is involved, Consent of Surety is required AIA DOCUMENT G707, CONSENT OF SURETY, may be used for this purpose
Indicate attachment (yes) (no)

The following supporting documents should be attached hereto if required by the Owner

1 Contractor's Release or Waiver of Liens, conditional upon receipt of final payment

2 Separate Releases or Waivers of Liens from Subcontractors and material and equipment suppliers, to the extent required by the Owner, accompanied by a list thereof

3 Contractor's Affidavit of Release of Liens (AIA DOCUMENT G706A)

CONTRACTOR

Address

BY

Subscribed and sworn to before me this

day of 19

Notary Public

My Commission Expires

CONTRACTOR'S AFFIDAVIT OF RELEASE OF LIENS

AIA DOCUMENT G706A

OWNER ☐
ARCHITECT ☐
CONTRACTOR ☐
SURETY ☐
OTHER ☐

TO (Owner)

ARCHITECT'S PROJECT NO

CONTRACT FOR

CONTRACT DATE.

PROJECT
(name, address)

State of

County of

The undersigned, pursuant to Article 9 of the General Conditions of the Contract for Construction, AIA Document A201, hereby certifies that to the best of his knowledge, information and belief, except as listed below, the Releases or Waivers of Lien attached hereto include the Contractor, all Subcontractors all suppliers of materials and equipment, and all performers of Work, labor or services who have or may have liens against any property of the Owner arising in any manner out of the performance of the Contract referenced above

EXCEPTIONS (If none, write "None" If required by the Owner, the Contractor shall furnish bond satisfactory to the Owner for each exception)

SUPPORTING DOCUMENTS ATTACHED HERETO

1 Contractor's Release or Waiver of Liens, conditional upon receipt of final payment

2 Separate Releases or Waivers of Liens from Subcontractors and material and equipment suppliers, to the extent required by the Owner, accompanied by a list thereof

CONTRACTOR

Address

BY

Subscribed and sworn to before me this

day of 19

Notary Public

My Commission Expires

CONSENT OF SURETY COMPANY TO FINAL PAYMENT

AIA DOCUMENT G707

OWNER ☐
ARCHITECT ☐
CONTRACTOR ☐
SURETY ☐
OTHER ☐

PROJECT
(name, address)

TO (Owner)

ARCHITECT'S PROJECT NO.

CONTRACT FOR

CONTRACT DATE

CONTRACTOR

In accordance with the provisions of the Contract between the Owner and the Contractor as indicated above, the (here insert name and address of Surety Company)

, SURETY COMPANY,

on bond of (here insert name and address of Contractor)

, CONTRACTOR,

hereby approves of the final payment to the Contractor, and agrees that final payment to the Contractor shall not relieve the Surety Company of any of its obligations to (here insert name and address of Owner)

, OWNER,

as set forth in the said Surety Company's bond

IN WITNESS WHEREOF,
the Surety Company has hereunto set its hand this day of 19

Surety Company

Signature of Authorized Representative

Attest:
(Seal)

Title

NOTE This form is to be used as a companion document to AIA DOCUMENT G706, CONTRACTOR'S AFFIDAVIT OF PAYMENT OF DEBTS AND CLAIMS, Current Edition

CONSENT OF SURETY TO REDUCTION IN OR PARTIAL RELEASE OF RETAINAGE

AIA DOCUMENT G707 A

OWNER ☐
ARCHITECT ☐
CONTRACTOR ☐
SURETY ☐
OTHER

PROJECT
(name, address)

TO (Owner)

ARCHITECT'S PROJECT NO

CONTRACT FOR

CONTRACT DATE

In accordance with the provisions of the Contract between the Owner and the Contractor as indicated above, th
(here insert name and address of Surety as it appears in the bond)

, SURET'

on bond of (here insert name and address of Contractor as it appears in the bond)

, CONTRACTOF

hereby approves the reduction in or partial release of retainage to the Contractor as follows

The Surety agrees that such reduction in or partial release of retainage to the Contractor shall not relieve the Suret
of any of its obligations to (here insert name and address of Owner)

, OWNE'

as set forth in the said Surety's bond

IN WITNESS WHEREOF,
the Surety has hereunto set its hand this day of 19

Surety

Signature of Authorized Representative

Attest
(Seal)

Title

X

GENERAL TERMS AND CONDITIONS

GENERAL TERMS AND CONDITIONS

1 COUNTY AS OWNER

The word "County" in this contract refers to the County of Galveston

2 CONTRACTOR

The word "Contractor" refers to the person or entity agreeing to perform the work in this contract

3 PROGRAM ADMINISTRATOR

The term "Program Administrator" refers to the person designated by County to act on its behalf in administering this contract

4 STATUS OF CONTRACTOR

The Contractor shall at all times be considered to be an independent contractor, and will not hold itself or its employees out to be employees or agents of the County of Galveston

The Contractor shall provide, at the Contractor's expense, competent, full-time supervision of the work while actually in progress

5 ASSIGNMENT AND SUBLETTING

The Contractor will retain full control over this contract and will not assign or subcontract said contract without the prior written consent of the County The Contractor further agrees that the subcontracting any portion or feature of the work shall not relieve the Contractor from its full obligations under this contract

6 EQUAL OPPORTUNITY

The Contractor and all Subcontractors shall not discriminate against any employee or applicant for employment because of race, religion, color, sex, or national origin

The Contractor agrees to post in conspicuous places, available to employees and applicants for employment, notices setting forth the policies of non-discrimination

7 CONTRACT

This contract consists of the following documents, Invitation to Bid, Instructions to Bidders, Bid Proposal, Contract Award, Special Terms and Conditions (including specifications, drawings and addenda), General Terms and Conditions, and any other documents referenced herein or attached hereto for the work Collectively these documents may also be referred to as the Plans and Specifications

8 **DISCREPANCIES AND OMISSIONS**

In the event of any discrepancy between the Plans and Specifications, or otherwise, or in the event of any doubt as to the meaning and intent of any portion of the Plans and Specifications, the Program Administrator shall define which is intended to apply to the work Such definition shall be final and binding on Contractor

9 **COLLATERAL CONTRACT**

The County reserves the rights to provide by separate contract or otherwise, in such manner as not to delay its programs or damage said Contractor, all labor and material essential to the completion of the work that is not included in this contract

10 **TIME**

The Contractor is advised that time for completion will consist of the number of calendar days set out in the Contract Award

The time for completion will begin to run on the day after the issuance of a notice to proceed by the Program Administrator The Contractor is required to start work no later than ten (10) working days after the issuance of the written notice to proceed Failure to timely commence operations may be deemed by the County to be a default The Contractor will complete the work at that site within the time period specified If there is more than one site listed on the notice to proceed, work for all sites must be completed not later than is specified for each site by the Program Administrator

11 **TIME AND ORDER OF COMPLETION**

The Contractor will commence work within ten (10) working days after the issuance of the notice to proceed and will substantially complete it within the time specified in the Contract Award

By the term "substantially completed" is meant that work shall be fully completed with the exception of minor miscellaneous work and adjustment

12 EXTENSION OF TIME

Should the Contractor be delayed in the completion of the work by an act or neglect of the County or Program Administrator, or by any employee of either, or by other Contractors employed by the County, or by changes ordered in the work, or by strikes, lockouts, fire, or unusual delays by common carriers, or unavoidable cause or causes beyond the Contractor's control or by any cause which the Program Administrator shall decide justifies the delay, then an extension of time shall be allowed for completing the work sufficient to compensate for the delay The Contractor shall give the Program Administrator prompt notice in writing of the cause of such delay The amount of the extension will be determined by the Program Administrator

13 LOSSES FROM NATURAL CAUSES

All damage to the work from the action of the elements, or from any unforeseen circumstances in the prosecution of the work shall be repaired by the Contractor at his own cost

14 KEEPING OF PLANS AND SPECIFICATIONS ACCESSIBLE

The Contractor shall keep one (1) copy of all Plans and Specifications constantly accessible at the work site and available for inspection at all times

15 PERFORMANCE OF WORK

All work shall be performed and completed in a thorough, workmanlike manner and in accordance with the latest proven practices of the trade by thoroughly skilled and experienced workers

16 STORAGE AND CLEANUP

The County does not assume responsibility for any materials, tools, or equipment stored on or about the worksite The worksite shall be cleared of debris by the Contractor continuously through the progress of the work and also upon final completion of the work

17 WORKING HOURS

Contractor may perform work twenty four hours a day, seven days a week, unless otherwise restricted by the Special Conditions of this contract

18 WORKSITE SECURITY

Contractor shall maintain the security of the worksite and shall restrict access to the site to the following

a) its employees,
b) employees of subcontractors,
c) representatives of manufacturers whose goods are utilized in the work and are called to the site by either the Contractor or the Program Administrator, and
d) agents and/or employees of the County

Contractor shall provide adequate protection to persons on the worksite, adjacent properties, and utilities as is necessary to keep each free of damage or injury Contractor shall furnish all barricades, warning lights and other safety devices necessary for the safety and protection of the public and shall remove them upon completion of the work performed on those premises under the terms of this contract

Contractor will have complete control over the work site and shall be fully responsible for any loss of or damage to any County property from any cause and will reimburse County in the event of any loss or damage to County's property from any cause

Contractor shall take proper means to protect adjacent or adjoining properties which might be injured or seriously effected by construction undertaken under this Agreement from any damage or injury by reason of said process of construction Contractor shall be liable for any and all claims for such damage on account of its failure to fully protect all adjoining properties

19 ALCOHOL/DRUG FREE WORKPLACE

The County is committed to maintaining an alcohol and drug free workplace Possession, use or being under the influence of alcohol or controlled substances by the Contractor's employees while in the performance of this Contract is prohibited Violation of this requirement shall constitute grounds for immediate termination of the contract

20 LABOR

Contractor is encouraged to use local labor, but not at the expense of poor workmanship and higher cost

Contractor will not discriminate against any employee or applicant for employment because of race, religion, creed, color or national origin Contractor agrees to post in a conspicuous place a notice setting forth provisions of this non-discrimination clause

In the event of Contractor's non-compliance with the non-discrimination clause of this contract, the contract entered into may be canceled in whole or in part

21 **WAGE RATES**

This Contract is a Public Works Contract governed by V T C A, Government Code, Chapter 2258 That Act requires Contractor to pay workers not less than the general prevailing rate of per diem wages for work of a similar character in the locality in which the work is performed and not less than the general prevailing rate of per diem wages for legal holiday and overtime work

Prevailing wage rates determined by the United States Department of Labor in accordance with the Davis-Bacon Act (40 U S C Section 276a et seq) are used in this contract and are incorporated and made a part hereof

In the event other crafts or types of workers are required than are listed therein, such workers shall be paid at a rate not less than the prevailing rate for similar workers in the Galveston County area

Contractor acknowledges that

A) Pursuant to V T C A, Government Code §2258 022, a violation of the obligation to pay workers the prevailing wages shall result in Contractor paying the County the amount of $60 00 for each worker employed for each calendar day or part of the day that the worker is paid less than the wage rates stipulated in the Contract, and

B) Contractors and Subcontractors shall be required to keep a record showing the name and occupation of each worker employed by Contractor or Subcontractor in the construction of the work called for in the contract and the actual per diem wages paid to each worker The record shall be open at all reasonable hours to inspection by the officers and agents of the County

Contractor represents it has read this law and the penalties provided prior to entering into this agreement

22 **UTILITIES**

Contractor shall be responsible for any charges which may be made by any city or utility companies for the work to be performed by Contractor

23 PARKING

Contractor shall be responsible for the expense of parking the Contractor's vehicle(s) in a legal manner and at no expense or inconvenience to the County

24 FIRE AND SAFETY

Contractor is completely responsible for fire protection at the job site as well as the safety of its own employees as well as those entering onto the job site

25 CONTRACTOR'S BUILDINGS

The building of structures for housing men, or the erection of tents or other forms of protection will be permitted only at such places as the Program Administrator shall permit, and the sanitary conditions of the grounds in or about such structures shall at all times be maintained in the manner satisfactory to the Program Administrator

26 INSURANCE

Contractor shall obtain and pay for insurance set forth below prior to commencing work, and shall file with the Program Administrator certificates or copies of policies for approval and as proof of coverage

1) Workmen's Compensation
   a State Statutory
   b Applicable - Statutory

2) Comprehensive General Liability (including Premises – Operations, Independent Contractor's Protective, Products and Completed Operations, Broad Form Property Damage)
   a Bodily Injury –
      $100,000 00 each person, each occurrence
      $300,000 00 Aggregate, each occurrence
   b Property Damage including loss of use –
      $100,000 00 Each occurrence
   c Products and Completed Operations to be maintained for 1 year after Final Payment
   d Property Damage Liability Insurance will provide X, C or U coverage as applicable

3) Contractual Liability
   a Bodily Injury

$100,000 00 Each Person
$300,000 00 Each occurrence

b Property Damage
$100,000 00 Each occurence

4) Personal injury, with Employment Exclusion deleted
$100,000 00 Each occurence

5) Comprehensive Automobile Liability (including owned, non-owned and hired motor vehicles)
a Bodily Injury
$100,000 00 Each Person
$300,000 00 Each occurrence
b Property Damage
$100,000 00 Each occurrence

6) Builders Risk Insurance

The contractor shall furnish one copy of each Certificate of Insurance herein required with each signed copy of the Agreement and prior to commencement of the work The contractor shall furnish to the Owner copies of any endorsements that are subsequently issued amending coverage or limits Receipt of all required notices shall be evidenced by return receipt of registered or Certified letter The policies shall contain provision that coverages will not be cancelled until at least thirty days' prior written notice has been given to the County In the event of such notice of cancellation being given the contractor will provide substitute policies with the same provisions to county prior to the effective date of such cancellation

The above requirements do not establish limits of Contractor's liability

Contractor shall at all times during the term of this contract and any extensions thereof maintain such insurance coverage

Such insurance is to be provided at the sole cost of Contractor

All policies of insurance shall waive all rights of subrogation against County, its officers, employees and agents

The County shall be named as "additional insured" on such policies as are specified above

The County reserves the right to require additional insurance should it be deemed necessary

27 **SANITATION**

Necessary sanitary conveniences for the use of laborers at the worksite, properly secluded from the public observation, shall be constructed and maintained by Contractor in such manner at such points as shall be approved by the Program Administrator, and their use shall be strictly enforced

28 **DAILY CLEANUP**

Contractor shall confine to the work site all materials and refuse generated by Contractor's operations Materials which are stored on-site shall be stored in an orderly manner Materials or refuse from demolition and/or removal operations which become scattered in adjacent areas shall be collected and returned to the work site and satisfactorily removed Truck hauling materials must be covered to keep materials from littering streets

29 **FINAL GRADING**

If grading is required, when work is complete, Contractor shall grade the site to fill in holes and make a presentable appearance without disturbing trees and add fill dirt if needed Contractor may not leave voids in the grading and compaction of the property The land shall have a smooth appearance without concrete, bricks, building materials, and other debris on the surface

30 **RIGHT OF ENTRY**

County reserves the right to enter the property or location at which the work is being conducted, by such agents as it may elect, for the purpose of inspecting the work, or for the purpose of constructing or installing such collateral work as County may desire, or for any other purpose deemed necessary by County

31 **INSPECTION**

County reserves the right to inspect the work done by Contractor at any time

The inspection may include examination of the material furnished and the work done under this agreement to ensure compliance with the plans and specifications

Contractor shall furnish all reasonable aid and assistance required by the inspector(s) for the proper inspection and examination of the work The inspector(s) may make any order requiring remedy of deficient performance at any time Should Contractor object to any order by any inspector, Contractor may, within 24 hours, make written appeal to the Program Administrator for his decision, which decision shall be final and binding on Contractor

The approval or failure of an inspector to reject non complying work or materials shall not relieve Contractor of his obligation to perform the work in full compliance with the plans and specifications for the work

Contractor shall be responsible for the costs associated by the exposing and covering of any item of concealed work for which an inspection is performed

32 DEFECTS AND THEIR REMEDIES

It is further agreed that if the work or any part thereof, or any material brought on the ground for use in the work or selected for the same, shall be deemed by the Program Administrator as unsuitable or not in conformity with the specifications Contractor shall, after receipt of written notice thereof from the Program Administrator, forthwith remove such material and rebuild or otherwise remedy such work so that it shall be in full accordance with this contract

33 SUBSTANTIAL COMPLETION

When the Contractor determines that the work is substantially complete, he shall advise the Program Administrator of such and schedule a time for the Program Administrator to inspect the work Contractor shall have all systems fully functional and operational for the inspection of the Program Administrator All phases of the work will be examined by the Program Administrator, who will note any deficiencies in the work and notify Contractor of the same

The Program Administrator may acknowledge that the project is substantially complete if the work has been completed to the point where the work can be utilized for the general purpose for which it was undertaken, however, if the project is found not to be substantially complete, the Program Administrator will so advise the contractor

34 FINAL COMPLETION AND ACCEPTANCE

Within ten (10) days after Contractor has given the Program Administrator written notice that the work has been completed, or substantially completed, the Program Administrator shall inspect the work and, within said time, if the work be found to be completed or substantially completed in accordance with the plans and specifications, the Program Administrator shall issue a substantial completion certificate

Should such inspection reveal deficiencies on the work, the Program Administrator will deliver a list of deficiencies to Contractor for immediate repair No final payment will be made until all deficiencies have been remedied

35 **PARAGRAPH 35 HAS BEEN DELETED**

36 **PROGRESS PAYMENTS AND RETAINAGE**

If this contract provides for the making of progress payments, Contractor shall make application to County for payment utilizing forms provided by County for that purpose Contractor shall state the percentage or the limits of the work performed and request payment for the amount of acceptable work performed Applications for payment shall be made monthly by Contractor

The County shall then pay the Contractor on or before 45 days thereafter, the total amount of the request, less 5% of the amount thereof, which 5% shall be retained until final payments, and further less all previous payments, and further less all further sums that may be retained by the County under the terms of this agreement

Upon the attainment of substantial completion, payment will be made so that the sum of all payments made under the contact equals Ninety Five Percent (95%) of the total contract amount

37 **ESTIMATED QUANTITIES**

This Contract, including the specifications, plans and estimates, is intended to show clearly all the work to be done and material to be furnished hereunder The estimated quantities of the various classes of work to be done and material to be furnished under this contract are approximate and are to be used as a basis for estimating the probable cost of the work and for comparing the proposals offered for the work It is understood and agreed that the actual amount of work to be done and material to be furnished under this contract may differ somewhat from these estimates, and that the basis for payment under this contract shall be the plan quantity or actual amount of such work done whichever is specified It is further understood that the County does not guarantee any minimum amount of work under this Contract

Contractor agrees that it will make no claim for damages, anticipated profits or otherwise on account of any differences which may be found between the quantities of work actually done, the material actually furnished under this Contract and the estimated quantities contemplated and contained in the proposals

38 **CHANGES AND ALTERATIONS**

Contractor further agrees that Program Administrator may make such changes and alterations as County may see fit, in the line, grade, form dimensions, plans or materials for the work herein contemplated, or any part thereof, either

before or after the beginning of the contract construction, without affecting the validity of this Contract and the accompanying bonds

If such changes or alterations diminish the quantity of the work to be done, they shall not constitute the basis for a claim for damages, or anticipated profits on the work that may be dispensed with If they increase the amount of the work, and the increased work can fairly be classified under the specifications, such increase shall be paid for according to the quantity actually done and at the unit price established for such work under this contract, otherwise such additional work shall be paid for as provided under the paragraph entitled "EXTRA WORK" In case Program Administrator shall make such changes or alterations as shall make useless any work already done or material already furnished or used in said work, then County shall recompense Contractor for any material or labor so used, and for any actual loss occasioned by such change due to actual expenses incurred in preparation for the work as originally planned

39 **EXTRA WORK**

The term "Extra Work" as used in this contract shall be understood to mean and include all work that may be required by the Program Administrator to be done by Contractor to accomplish any change, alteration or addition to the work shown in the plans and specifications

It is agreed that Contractor shall perform all Extra Work under the direction of the Program Administrator when presented with a Written Work Order signed by the Program Administrator subject, however, to the right of Contractor to require a written confirmation of such Extra Work Order by the County Commissioners' Court It is also agreed that the compensation to be paid Contractor for performing said Extra Work shall be determined by one or more of the following methods

Method (a) - By agreed unit prices, or
Method (b) - By agreed lump sum or
Method (c) - If Neither Method (a) nor Method (b) can be agreed upon before the Extra Work is commenced, then Contractor shall be paid the "Actual field cost" of the work plus fifteen (15) percent

In the event said Extra Work be performed and paid for under Method (c), then the provisions of this paragraph shall apply and the "actual field cost" is hereby defined to include the cost of all workmen, such as foremen, timekeepers, merchants, and laborers, and materials, supplies, teams, trucks, rentals on machinery and equipment for time actually employed or used on such Extra Work plus actual transportation charges necessarily incurred, if the kind of equipment or machinery is not already on the job, together with all power, fuel, lubricants, water and similar operating expenses, also all necessary incidental expenses incurred directly on account of such Extra Work including Social Security, Old Age Benefits

and other payroll taxes, and a ratable proportion of premiums on Construction and Maintenance Bonds, Public Liability and Property Damage and Workmen's Compensation, and all other insurance as may be required by any law or ordinance, or directed by the Program Administrator or by him agreed The Program Administrator may direct the form in which accounts of the "actual field cost" shall be kept and may also specify in writing, before the work commences, the method of doing the work and the type and kind of machinery and equipment to be used, otherwise these matters shall be determined by Contractor Unless otherwise agreed upon, the prices for the use of machinery and equipment shall be determined by using the one hundred (100) percent of the actual hourly or daily rate (for the time used plus time in moving to and from Job) of the latest schedule of Equipment Ownership Expense adopted by the Association General Contractors of America Where practicable the terms and prices for the use of Machinery and Equipment shall be incorporated in the Written Extra Work Order The fifteen (15) percent of the "Actual Field Cost" to be paid Contractor shall cover and compensate him for his profit, overhead, general superintendence and field office expense, and all other elements of cost and expense not embraced within the 'actual field cost" as herein defined, save that where the Contractor's Camp or Field Office must be maintained primarily on account of such extra work, then the cost to maintain and operate same shall be included in the "actual field cost"

No claim for extra work of any kind will be allowed unless ordered in writing by the Program Administrator In case any orders or instructions, either oral or written appear to Contractor to involve extra work for which he should receive compensation, it shall make written request to the Program Administrator for written order authorizing Extra Work Should a difference of opinion arise as to what does or does not constitute extra work, or as to the payment therefor, and the Program Administrator insists upon its performance, Contractor shall proceed with the work after making written order and shall keep an accurate account of the "actual field cost" thereof, as provided under Method (c) and by this action Contractor will thereby preserve the right to submit the matter of payment to litigation

40 **FINAL PAYMENT**

Upon the issuance of the approval for payment, the Program Administrator shall certify same to County, who shall pay to Contractor the balance due Contractor under the terms of this agreement, provided it has fully performed its contractual obligations under the terms of this contract, and has provided County with a release of liens from all materialmen, suppliers and subcontractors utilized in the work

41 **HINDRANCES AND DELAYS**

No charge shall be made by Contractor for hindrances or delays from any cause (except when work is stopped by order of the County) during the progress of any portion of the work embraced in this contract In case said work

shall be stopped by the act of Program Administrator then such expense as in the judgment of the Program Administrator is caused by stopping of said work shall be paid by County to Contractor

42 **TIME OF FILING CLAIMS**

It is further agreed by both parties hereto that all questions of dispute or adjustment presented by Contractor shall be in writing and filed with the Program Administrator within a reasonable time after the Program Administrator has given any directions, order, or instruction to which Contractor desires to take exception The Program Administrator shall reply to such written exceptions by Contractor and render his final decision in writing

43 **LIQUIDATED DAMAGES FOR DELAY**

Contractor agrees that time is of the essence of this contract and that for each day of a delay of a day beyond the number of working days or calendar days herein agreed upon the completion of the work herein specified and contracted for (after due allowance for such extension of time as is provided for under Extension of Time hereinabove) County may withhold permanently from Contractor's total compensation the sum specified in the special conditions as liquidated damages for such delay

44 **ABANDONMENT BY CONTRACTOR**

Should Contractor fail to start or resume work within ten (10) days after written notification from the Program Administrator or if Contractor fails to comply with a change order or instruction of the Program Administrator, Contractor shall be declared to be in default and the Surety on the bonds shall be notified in writing and directed to complete the work, and a copy of said notice shall be delivered to Contractor

In case the Surety should fail to commence compliance with the notice for completion hereinbefore provided for within ten (10) days after services of such notice, or in the event there is no Surety, then County may provide for completion of the work in any manner it deems appropriate

45 **TERMINATION**

County may terminate this Contract

i immediately by giving written notice, if Contractor breaches its obligation under the Contract, or
ii with or without cause, after giving 30 days written notice of termination to Contractor

In the event this Contract is terminated Contractor will be paid for work satisfactorily completed The amount of such payment will be determined by the Program Administrator

46 **SALVAGE**

Any materials, equipment and fixtures specifically ordered to be salvaged under these specifications shall remain the property of County and will be delivered to the site designated by the Program Administrator All other items shall be disposed of by Contractor in compliance with all applicable laws and regulations

47 **COMPLIANCE WITH CODES**

Contractor shall comply with all city, county, and state codes, laws, and ordinances in force at the time of award of contract and applicable to such work Contractor shall obtain, at Contractor's own expense such permits, certificates, and licenses as may be required in the performance of the specified work

48 **INDEMNITY**

Contractor shall defend, indemnify, and save whole and harmless Galveston County, and it officers, agents, and employees from and against all claims and suits of whatever character, arising from the performance of this contract

49 **PROTECTION AGAINST CLAIMS OF SUBCONTRACTORS, LABORERS, MATERIALMEN AND FURNISHERS OF MACHINERY EQUIPMENT AND SUPPLIES**

Contractor agrees to indemnify and hold County harmless from all claims of subcontractors, laborers, workmen, mechanics, materialmen and furnishers of equipment, and all supplies incurred in the performance of this contract Contractor shall furnish satisfactory evidence that all obligations of the nature hereinabove designated have been paid, discharged or waived If Contractor fails to do so, then County reserves the right to pay unpaid bills of which County has written notice direct and withhold from Contractor's unpaid compensation a sum of money reasonably sufficient to liquidate any and all such lawful claims

50 **PROTECTION AGAINST ROYALTIES, PATENTED INVENTIONS OR PROCESS, OR PATENT INFRINGEMENT**

Contractor shall, at its own expense, settle or defend any claim, suit or action brought against County and shall protect and save harmless County from all and every demand for damages, royalties or fees for any patented invention or

process used by it in connection with the work done, process used or material furnished under this Contract, and shall pay any final judgement for damages, attorneys fees and costs which may be awarded against County

51 **LAWS AND ORDINANCES**

Contractor shall at all times observe and comply with all Federal, State and Local Laws, ordinances and regulations which in any manner effect the contract or the work, and shall indemnify and save harmless the County against any claim arising from the violation of any such laws and ordinances, whether by Contractor or its employees

52 **WARRANTY**

Contractor and/or its Surety will be required by County to repair, replace, restore, and/or to make such corrections as are required of it to comply strictly in all things with this contract and the Plans and Specifications and any and all of said work and/or materials, which, within a period of one year from and after the date of the passing, approval, and/or acceptance of any such work or materials, are found to be defective or to fail in any way to comply with this contract or with the Plans and Specifications

53 **PERMITS AND LICENSES**

Contractor shall be responsible for obtaining and furnishing all necessary permits and licenses, City, County, State or Federal as are required for the performance of this contract

54 **NOTICE**

Any notice required or permitted between the parties under this contract must be in writing and shall be delivered in person or mailed, certified mail, return receipt requested, or may be transmitted by fax as follows
to County at

Hon Mark Henry, County Judge
Galveston County Courthouse, 2nd floor
Galveston, TX 77550
Fax (409) 765-2653

and to Contractor at the address listed in Contractor's Bid Proposal

55 **FORCE MAJEURE**

If the performance by County of any of its obligations under this contract is delayed by any occurrence not of its own conduct, whether an act of

God or the common enemy or the result of war, riot, civil commotion, sovereign conduct, or the act or conduct of any person not a party or privy to this contract, the County is excused from its performance for a period of time as is reasonably necessary after the occurrence to remedy the effects of the occurrence

56 **APPLICABLE LAWS**

Contractor acknowledges that County is a governmental entity and this Agreement is an open record under the Open Records Act and will be discussed and voted upon in a public meeting

57 **ENTIRETY OF AGREEMENT AND MODIFICATION**

This contract contains the entire agreement between the parties A prior agreement, promise, negotiation or representation not expressly set forth in this contract has no force or effect A subsequent modification to this contract must be in writing, signed by both parties

An official representative, employee, or agent of the County does not have authority to modify or amend this contract except pursuant to specific authority to do so granted by the Commissioners' Court

58 **SEVERABILITY; CONFORMITY WITH LEGAL LIMITATIONS**

If a provision contained in this contract is held invalid for any reason, the invalidity does not affect other provisions of the contract that can be given effect without the invalid provision, and to this end the provisions of this contract are severable

59 **GOVERNING LAW; VENUE**

This contract shall be governed by the laws of the State of Texas Venue for an action arising under this contract shall be exclusively in Galveston County

60 **LINES AND GRADES**

The Engineer will furnish points for horizontal and vertical control Any additional stakes required by the Contractor shall be set at his expense Whenever necessary, work shall be suspended to permit this work, but such suspension will be as brief as practicable and the Contractor shall be allowed no extra compensation therefor The Contractor shall give the Engineer ample notice of the time and place where control lines and bench marks will be needed All control stakes, marks, etc shall be carefully preserved by the Contractor, and in case of careless destruction or removal by him or his employees, such control stakes, marks, etc shall be replaced by the Engineer at the Contractor's expense

XI

TXCDBG
GENERAL CONTRACT CONDITIONS
FOR CONSTRUCTION

GENERAL CONTRACT CONDITIONS FOR CONSTRUCTION

1 Contract and Contract Documents

(a) The project to be constructed pursuant to this contract will be financed with assistance from the CDBG and is subject to all applicable Federal and State laws and regulations

(b) The Plans, Specifications and Addenda, hereinafter enumerated in Paragraph 1 of the Supplemental General Conditions shall form part of this contract and the provisions thereof shall be as binding upon the parties hereto as if they were herein fully set forth

2 Definitions

Whenever used in any of the contract Documents, the following meanings shall be given to the terms here in defined

(a) The term "Contract" means the Contract executed between the Galveston County, hereinafter called the Owner and (Name of Construction Co), hereinafter called Contractor, of which these GENERAL CONDITIONS, form a part

(b) The term "Project Area" means the area within which are the specified Contract limits of the Improvements contemplated to be constructed in whole or in part under this contract

(c) The term "Engineer" means LJA Engineering, Inc , Engineer in charge, serving the Owner with architectural or engineering services, his successor, or any other person or persons, employed by the Owner for the purpose of directing or having in charge the work embraced in this Contract

(d) The term "Contract Documents" means and shall include the following Executed Contract, Addenda (if any), Invitation for Bids, Instructions to Bidders, Signed Copy of Bid, General Conditions, Special Conditions, Technical Specifications, and Drawings (as listed in the Schedule of Drawings)

3 Supervision By Contractor

(a) Except where the Contractor is an individual and gives his personal supervision to the work, the Contractor shall provide a competent superintendent, satisfactory to the Local Public Agency and the Engineer, on the work at all times during working hours with full authority to act for him The Contractor shall also provide an adequate staff for the proper coordination and expediting of his work

(b) The Contractor shall lay out his own work and he shall be responsible for all work executed by him under the Contract He shall verify all figures and elevations before proceeding with the work and will be held responsible for any error resulting from his failure to do so

4 Subcontracts

(a) The Contractor shall not execute an agreement with any subcontractor or permit any subcontractor to perform any work included in this contract until he has verified the subcontractor as eligible to participate in federally funded contracts

(b) No proposed subcontractor shall be disapproved by the city/county except for cause

(c) The Contractor shall be as fully responsible to the city/county for the acts and omissions of his subcontractors, and of persons either directly or indirectly employed by them

(d) The Contractor shall cause appropriate provisions to be inserted in all subcontracts relative to the work and required compliance by each subcontractor with the applicable provisions of the Contract

(e) Nothing contained in the Contract shall create any contractual relation between any subcontractor and the Owner

5 Fitting and Coordination of Work

The Contractor shall be responsible for the proper fitting of all work and for the coordination of the operations of all trades, subcontractors, or material suppliers engaged upon this Contract

6 Payments to Contractor

(a) Partial Payments

1) The Contractor shall prepare his requisition for partial payment as of the last day of the month and submit it, with the required number of copies, to the Engineer for his approval The amount of the payment due the Contractor shall be determined by adding to the total value of work completed to date, the value of materials properly stored on the site and deducting (1) ten percent (10%) of the total amount, to be retained until final payment and (2) the amount of all previous payments The total value of work completed to date shall be based on the estimated quantities of work completed and on the unit prices contained in the agreement The value of materials properly stored on the site shall be based upon the estimated quantities of such materials and the invoice prices Copies of all invoices shall be available for inspection of the Engineer

2) Monthly or partial payments made by the Owner to the Contractor are moneys advanced for the purpose of assisting the contractor to expedite the work of construction The Contractor shall be responsible for the care and protection of all materials and work upon which payments have been made until final acceptance of such work and materials by the Owner Such payments shall not constitute a waiver of the right of the Owner to require the fulfillment of all terms of the Contract and the delivery of all improvements embraced in this Contract complete and satisfactory to the Owner in all details

(b) Final Payment

1) After final inspection and acceptance by the Owner of all work under the Contract, the Contractor shall prepare his requisition for final payment which shall be based upon the careful inspection of each item of work at the applicable unit prices stipulated in the Agreement The total amount of the final payment due the Contractor under this contract shall be the amount computed as described above less all previous payments

2) The Owner before paying the final estimate, shall require the Contractor to furnish releases or receipts from all subcontractors having performed any work and all persons having supplied materials, equipment (installed on the Project) and services to the Contractor, if the Owner deems it necessary in order to protect its interest The Owner may, if it deems such action advisable, make payment in part or in full to the Contractor without requiring the furnishing of such releases or receipts and any payments made shall in no way impair the obligations of any surety or sureties furnished under this Contract

3) Any amount due the Owner under Liquidated Damages, shall be deducted from the final payment due the contractor

(c) Payments Subject to Submission of Certificates

Each payment to the Contractor by the Owner shall be made subject to submission by the Contractor of all written certifications required of him and his subcontractors

(d) Withholding Payments

The Owner may withhold from any payment due the Contractor whatever is deemed necessary to protect the Owner, and if so elects, may also withhold any amounts due from the Contractor to any subcontractors or material dealers, for work performed or material furnished by them The foregoing provisions shall be construed solely for the benefit of the Owner and will not require the Owner to determine or adjust any claims or disputes between the Contractor and his subcontractors or material dealers, or to withhold any moneys for their protection unless the Owner elects to do so The failure or refusal of the Owner to withhold any moneys from the Contractor shall in no way impair the obligations of any surety or sureties under any bond or bonds furnished under this Contract

7 Changes in the Work

(a) The Owner may make changes in the scope of work required to be performed by the Contractor under the Contract without relieving or releasing the Contractor from any of his obligations under the Contract or any guarantee given by him pursuant to the Contract provisions, and without affecting the validity of the guaranty bonds, and without relieving or releasing the surety or sureties of said bonds All such work shall be executed under the terms of the original Contract unless it is expressly provided otherwise Additionally, all such change orders must be approved by the CDBG staff prior to execution of same

(b) Except for the purpose of affording protection against any emergency endangering health, life, limb or property, the Contractor shall make no change in the materials used or in the specified manner of constructing and/or installing the improvements or supply additional labor, services or materials beyond that actually required for the execution of the Contract, unless in pursuance of a written order from the Owner authorizing the Contractor to proceed with the change No claim for an adjustment of the Contract Price will be valid unless so ordered

(c) If applicable unit prices are contained in the Agreement, the Owner may order the Contractor to proceed with desired unit prices specified in the Contract, provided that in case of a unit price contract the net value of all changes does not increase the original total amount of the agreement by more than twenty-five percent (25%) or decrease the original the total amount by eighteen percent (18%)

(d) Each change order shall include in its final form

1) A detailed description of the change in the work

2) The Contractor's proposal (if any) or a confirmed copy thereof

3) A definite statement as to the resulting change in the contract price and/or time

4) The statement that all work involved in the change shall be performed in accordance with contract requirements except as modified by the change order

5) The procedures as outlined in this Section for a unit price contract also apply in any lump sum contract

8 Claims for Extra Cost

(a) If the Contractor claims that any instructions by Drawings or otherwise involve extra cost or extension of time, he shall, within ten days after the receipt of such instructions, and in any event before proceeding to execute the work, submit his protest thereto in writing to the Owner, stating clearly and in detail the basis of his objections No such claim will be considered unless so made

(b) Claims for additional compensation for extra work, due to alleged errors in ground elevations, contour lines, or bench marks, will not be recognized unless accompanied by certified survey data, made prior to the time the original ground was disturbed, clearly showing that errors exist which resulted, or would result, in handling more material, or performing more work, than would be reasonably estimated from the Drawings and maps issued

(c) Any discrepancies which may be discovered between actual conditions and those represented by the Drawings and maps shall be reported at once to the Owner and work shall not proceed except at the Contractor's risk, until written instructions have been received by him from the Owner

(d) If, on the basis of the available evidence, the Owner determines that an adjustment of the Contract Price and/or time is justifiable, a change order shall be executed

9 Termination, Delays, and Liquidated Damages

(a) Right of the Owner to Terminate Contract

(b) In the event that any of the provisions of this contract are violated by the Contractor, or by any of his subcontractors, the Owner may serve written notice upon the Contractor and the Surety of its intention to terminate the contract The notices shall contain the reasons for such intention to terminate the contract, and unless such violation or delay shall cease and satisfactory arrangement of correction be made within ten days, the contract shall, upon the expiration of said ten (10) days, cease and terminate In the event of any such termination, the Owner shall immediately serve notice thereof upon the Surety and the Contractor The Surety shall have the right to take over and perform the contract Provided, however, that if the Surety does not commence performance thereof within ten (10) days from the date of the mailing to such Surety of notice of termination, the Owner may take over the work and complete the project by bid/contract or by force account at the expense of the Contractor and his Surety shall be liable to the Owner for any excess cost incurred In such event the Owner may take possession of and utilize in completing the work, such materials, appliances, and plant as may be on the site of the work and necessary therefore

(c) Liquidated Damages for Delays

(d) If the work is not completed within the time stipulated in the applicable bid for Lump Sum or Unit Price Contract provided, the Contractor shall pay to the Owner as fixed, agreed, and liquidated damages (it being impossible to determine the actual damages occasioned by the delay) the amount of _____$500 00_____for each calendar day of delay, until the work is completed The Contractor and his sureties shall be liable to the Owner for the amount thereof

(e) Excusable Delays

1) The right of the Contractor to proceed shall not be terminated nor shall the Contractor be charged with liquidated damages for any delays in the completion of the work due to

2) Any acts of the Government, including controls or restrictions upon or requisitioning of materials, equipment, tools, or labor by reason of war, national defense, or any other national emergency,

3) Any acts of the Owner,

4) Causes not reasonably foreseeable by the parties to this Contract at the time of the execution of the Contract which are beyond the control and without the fault or negligence of the Contractor, including, but not restricted to, acts of God or of the public enemy, acts of another Contractor in the performance of some other contract with the Owner, fires, floods, epidemics, quarantine, restrictions, strikes, freight embargoes, and weather of unusual severity such as hurricanes, tornadoes, cyclones and other extreme weather conditions

5) Provided, however, that the Contractor promptly notifies the Owner within ten (10) days in writing of the cause of the delay Upon receipt of such notification, the Owner shall ascertain the facts and the cause and extent of delay If, upon the basis of the facts and the terms of this contract, the delay is properly excusable, the Owner shall extend the time for completing the work for a period of time commensurate with the period of excusable delay

10 Assignment or Novation

The Contractor shall not assign or transfer, whether by an assignment or novation, any of its rights, duties, benefits, obligations, liabilities, or responsibilities under this Contract without the written consent of the Owner, provided, however, that assignments to banks or other financial institutions may be made without the consent of the Owner No assignment or novation of this Contract shall be valid unless the assignment or novation expressly provides that the assignment of any of the Contractor's rights or benefits under the Contract is subject to a prior lien for labor performed, services rendered, and materials, tools, and equipment supplied for the performance of the work under this Contract in favor of all persons, firms, or corporations rendering such labor or services or supplying such materials, tools, or equipment

11 Disputes

(a) All disputes arising under this Contract or its interpretation except those disputes covered by FEDERAL LABOR STANDARDS PROVISIONS whether involving law or fact or both, or extra work, and all claims for alleged breach of contract shall, within ten (10) days of commencement of the dispute, be presented by the Contractor to the Owner for decision Any claim not presented within the time limit specified in this paragraph shall be deemed to have been waived, except that if the claim is of a continuing character and notice of the claim is not given within ten (10) days of

its commencement, the claim will be considered only for a period commencing ten (10) days prior to the receipt of the Owner

(b) The Contractor shall submit in detail his claim and his proof thereof

(c) If the Contractor does not agree with any decision of the Owner, he shall in no case allow the dispute to delay the work but shall notify the Owner promptly that he is proceeding with the work under protest

12 Technical Specifications and Drawings

Anything mentioned in the Technical Specifications and not shown on the Drawings or vice versa, shall be of like effect as if shown on or mentioned in both In case of difference between Drawings and Technical Specifications, the Technical Specifications shall govern In case of any discrepancy in Drawings, or Technical Specifications, the matter shall be immediately submitted to the Owner, without whose decision, said discrepancy shall not be adjusted by the Contractor, save only at his own risk and expense

13 Shop Drawings

(a) All required shop drawings, machinery details, layout drawings, etc shall be submitted to the Engineer in 6 copies for approval sufficiently in advance of requirements to afford ample time for checking, including time for correcting, resubmitting and rechecking if necessary The Contractor may proceed, only at his own risk, with manufacture or installation of any equipment or work covered by said shop drawings, etc until they are approved and no claim, by the Contractor, for extension of the contract time shall be granted by reason of his failure in this respect

(b) Any drawings submitted without the Contractor's stamp of approval will not be considered and will be returned to him for proper resubmission If any drawings show variations from the requirements of the Contract because of standard shop practice or other reason, the Contractor shall make specific mention of such variation in his letter of transmittal in order that, if acceptable, suitable action may be taken for proper adjustment of contract price and/or time, otherwise the Contractor will not be relieved of the responsibility for executing the work in accordance with the Contract even though the drawings have been approved

(c) If a shop drawing is in accordance with the contract or involves only a minor adjustment in the interest of the Owner not involving a change in contract price or time, the engineer may approve the drawing The approval shall not relieve the Contractor from his responsibility for adherence to the contract or for any error in the drawing

14 Requests for Supplementary Information

It shall be the responsibility of the Contractor to make timely requests of the Owner for any additional information not already in his possession which should be furnished by the Owner under the terms of this Contract, and which he will require in the planning and execution of the work Such requests may be submitted from time to time as the need approaches, but each shall be filed in ample time to permit appropriate action to be taken by all parties involved so as to avoid delay Each request shall be in writing, and list the various items and the latest date by which each will be required by the Contractor The first list shall be submitted within two weeks after Contract award and shall be as complete as possible at that time The Contractor shall, if requested, furnish promptly any assistance and information the Engineer may require in responding to these requests of the Contractor The Contractor shall be fully responsible for any delay in his work or to others arising from his failure to comply fully with the provision of this section

15 Materials and Workmanship

(a) Unless otherwise specifically provided for in the technical specifications, all workmanship, equipment, materials and articles incorporated in the work shall be new and the best grade of the respective kinds for the purpose Where equipment, materials, articles or workmanship are referred to in the technical specifications as "equal to" any particular standard, the Engineer shall decide the question of equality

(b) The Contractor shall furnish to the Owner for approval the manufacturer's detailed specifications for all machinery, mechanical and other special equipment, which he contemplates installing together with full information as to type, performance characteristics, and all other pertinent information as required, and shall likewise submit for approval full information concerning all other materials or articles which he proposes to incorporate

(c) Machinery, mechanical and other equipment, materials or articles installed or used without such prior approval shall be at the risk of subsequent rejection

(d) Materials specified by reference to the number or symbol of a specific standard, shall comply with requirements in the latest revision thereof and any amendment or supplement thereto in effect on the date of the Invitation for Bids, except as limited to type, class or grade, or modified in the technical specifications shall have full force and effect as though printed therein

(e) The Owner may require the Contractor to dismiss from the work such employee or employees as the Owner or the Engineer may deem incompetent, or careless, or insubordinate

16 Samples, Certificates and Tests

(a) The Contractor shall submit all material or equipment samples, certificates, affidavits, etc , as called for in the contract documents or required by the Engineer, promptly after award of the contract and acceptance of the Contractor's bond No such material or equipment shall be manufactured or delivered to the site, except at the Contractor's own risk, until the required samples or certificates have been approved in writing by the Engineer Any delay in the work caused by late or improper submission of samples or certificates for approval shall not be considered just cause for an extension of the contract time

(b) Each sample submitted by the Contractor shall carry a label giving the name of the Contractor, the project for which it is intended, and the name of the producer The accompanying certificate or letter from the Contractor shall state that the sample complies with contract requirements, shall give the name and brand of the product, its place of origin, the name and address of the producer and all specifications or other detailed information which will assist the Engineer in making a prompt decision regarding the acceptability of the sample It shall also include the statement that all materials or equipment furnished for use in the project will comply with the samples and/or certified statements

(c) Approval of any materials shall be general only and shall not constitute a waiver of the Owner's right to demand full compliance with Contract requirements After actual deliveries, the Engineer will have such check tests made as he deems necessary in each instance and may reject materials and equipment and accessories for cause, even though such materials and articles have been given general approval If materials, equipment or accessories which fail to meet check tests have been incorporated in the work, the Engineer will have the right to cause their removal and replacement by proper materials or to demand and secure such reparation by the Contractor as is equitable

(d) Except as otherwise specifically stated in the Contract, the costs of sampling and testing will be divided as follows

1) The Contractor shall furnish without extra cost, including packing and delivery charges, all samples required for testing purposes, except those samples taken on the project by the Engineer,

2) The Contractor shall assume all costs of re-testing materials which fail to meet contract requirements,

3) The Contractor shall assume all costs of testing materials offered in substitution for those found deficient,

4) The Owner will pay all other expenses

17 Permits and Codes

(a) The Contractor shall give all notices required by and comply with all applicable laws, ordinances, and codes of the Local Government All construction work and/or utility installations shall comply with all applicable ordinances, and codes including all written waivers Before installing any work, the Contractor shall examine the drawings and technical specifications for compliance with applicable ordinances and codes and shall immediately report any discrepancy to the Owner Where the requirements of the drawings and technical specifications fail to comply with such applicable ordinances or codes, the Owner will adjust the Contract by Change Order to conform to such ordinances or codes (unless waivers in writing covering the difference have been granted by the governing body or department) and make appropriate adjustment in the Contract Price or stipulated unit prices

(b) Should the Contractor fail to observe the foregoing provisions and proceed with the construction and/or install any utility at variance with any applicable ordinance or code, including any written waivers (notwithstanding the fact that such installation is in compliance with the drawings and technical specifications), the Contractor shall remove such work without cost to the Owner

(c) The Contractor shall at his own expense, secure and pay for all permits for street pavement, sidewalks, shed, removal of abandoned water taps, sealing of house connection drains, pavement cuts, buildings, electrical, plumbing, water, gas and sewer permits required by the local regulatory body or any of its agencies

(d) The Contractor shall comply with applicable local laws and ordinances governing the disposal of surplus excavation, materials, debris and rubbish on or off the Project Area and commit no trespass on any public or private property in any operation due to or connected with the Improvements contained in this Contract

(e) The Contractor will be required to make arrangements for and pay the water, electrical power, or any other utilities required during construction

(f) During construction of this project, the Contractor shall use every means possible to control the amount of dust created by construction Prior to the close of a day's work, the Contractor, if directed by the Owner, shall moisten the bank and surrounding area to prevent a dusty condition

18 Care of Work

(a) The Contractor shall be responsible for all damages to person or property that occur as a result of his fault or negligence in connection with the prosecution of the work and shall be responsible for the proper care and protection of all materials delivered and work performed until completion and final acceptance

(b) The Contractor shall provide sufficient competent watchmen, both day and night, including Saturdays, Sundays, and holidays, from the time the work is commenced until final completion and acceptance

(c) In an emergency affecting the safety of life, limb or property, including adjoining property, the Contractor, without special instructions or authorization from the Owner is authorized to act at his discretion to prevent such threatened loss or injury, and he shall so act He shall likewise act if instructed to do so by the Owner

(d) D The Contractor shall avoid damage as a result of his operations to existing sidewalks, streets, curbs, pavements, utilities (except those which are to be replaced or removed), adjoining property, etc , and he shall at his own expense completely repair any damage thereto caused by his operations

(e) The Contractor shall shore up, brace, underpin, secure, and protect as maybe necessary, all foundations and other parts of existing structures adjacent to, adjoining, and in the vicinity of the site, which may be in any way affected by the excavations or other operations connected with the construction of the improvements included in this Contract The Contractor shall be responsible for the giving of any and all required notices to any adjoining or adjacent property owner or other party before the commencement of any work The Contractor shall indemnify and save harmless the Owner from any damages on account of settlements or the loss of lateral support of adjoining property and from all loss or expense and all damages for which the Owner may become liable in consequence of such injury or damage to adjoining and adjacent structures and their premises

19 Accident Prevention

(a) No laborer or mechanic employed in the performance of this Contract shall be required to work in surroundings or under working conditions which are unsanitary, hazardous, or dangerous to his health or safety as determined under construction safety and health standards promulgated by the Secretary of Labor

(b) The Contractor shall exercise proper precaution at all times for the protection of persons and property and shall be responsible for all damages to persons or property, either on or off the site, which occur as a result of his prosecution of the work

(c) The Contractor shall maintain an accurate record of all cases of death, occupational disease, or injury requiring medical attention or causing loss of time from work, arising out of and in the course of employment on work under the Contract The Contractor shall promptly furnish the Owner with reports concerning these matters

(d) The Contractor shall indemnify and save harmless the Owner from any claims for damages resulting from property damage, personal injury and/or death suffered or alleged to have been suffered by any person as a result of any work conducted under this contract

(e) The Contractor shall provide trench safety for all excavations more than five feet deep prior to excavation All OSHA Standards for trench safety must be adhered to by the Contractor

(f) The contractor shall at all times conduct his work in such a manner as to insure the least possible inconvenience to vehicular and pedestrian traffic At the close of the work each day, all streets where possible in the opinion of the Owner, shall be opened to the public in order that persons living in the area may have access to their homes or businesses by the use of the streets Barricades, warning signs, and necessary lighting shall be provided to the satisfaction of the Owner at the expense of the Contractor

20 Sanitary Facilities

The Contractor shall furnish, install and maintain ample sanitary facilities for the workmen As the needs arise, a sufficient number of enclosed temporary toilets shall be conveniently placed as required Drinking water shall be provided from an approved source, so piped or transported as to keep it safe and fresh and served from single service containers or satisfactory types of sanitary drinking stands or fountains All such facilities and services shall be furnished in strict accordance with existing and governing health regulations

21 Use of Premises

(a) The Contractor shall confine his equipment, storage of materials, and construction operations to the contract limits as shown on the drawings and as prescribed by ordinances or permits, or as may be desired by the Owner, and shall not unreasonably encumber the site or public rights of way with his materials and construction equipment

(b) The Contractor shall comply with all reasonable instructions of the Owner and all existing state and local regulations regarding signs, advertising, traffic, fires, explosives, danger signals, and barricades

22 Removal of Debris, Cleaning, Etc

The Contractor shall, periodically or as directed during the progress of the work, remove and legally dispose of all surplus excavated material and debris, and keep the Project Area and public rights of way reasonably clear Upon completion of the work, he shall remove all temporary construction facilities, debris and unused materials provided for work, and put the whole site of the work and public rights of way in a neat and clean condition

23 Inspection

(a) All materials and workmanship shall be subject to inspection, examination, or test by the Owner and Engineer at any and all times during manufacture or construction and at any and all places where such manufacture or construction occurs The Owner shall have the right to reject defective material and workmanship or require its correction Unacceptable workmanship shall be satisfactorily corrected Rejected material shall be promptly segregated and removed from the Project Area and replaced with material of specified quality without charge If the Contractor fails to proceed at once with the correction of rejected workmanship or defective material, the Owner may by contract or otherwise have the defects remedied or rejected materials removed from the Project Area and charge the cost of the same against any Monies which may be due the Contractor, without prejudice to any other rights or remedies of the Owner

(b) The Contractor shall furnish promptly all materials reasonably necessary for any tests which may be required All tests by the Owner will be performed in such manner as not to delay the work unnecessarily and will be made in accordance with the provisions of the technical specifications

(c) The Contractor shall notify the Owner sufficiently in advance of back filling or concealing any facilities to permit proper inspection If any facilities are concealed without approval or consent of the Owner, the Contractor shall uncover for inspection and recover such facilities at his own expense, when so requested by the Owner

(d) Should it be considered necessary or advisable by the Owner at any time before final acceptance of the entire work to make an examination of work already completed by uncovering the same, the Contractor shall on request promptly furnish all necessary facilities, labor, and material If such work is found to be defective in any important or essential respect, due to fault of the Contractor or his subcontractors, the Contractor shall defray all the expenses of such examination and of satisfactory reconstruction If, however, such work is found to meet the requirements of the Contract, the actual cost of labor and material necessarily involved in the examination and replacement, shall be allowed the Contractor and he shall, in addition, if completion of the work of the entire Contract has been delayed thereby, be granted a suitable extension of time on account of the additional work involved

(e) Inspection of materials and appurtenances to be incorporated in the improvements included in this Contract may be made at the place of production, manufacture or shipment, whenever the quantity justifies it, and such inspection and acceptance, unless otherwise stated in the technical specifications, shall be final, except as regards (1) latent defects, (2) departures from specific requirements of the Contract, (3) damage or loss in transit, or (4) fraud or such gross mistakes as amount to fraud Subject to the requirements contained in the preceding sentence, the inspection of materials as a whole or in part will be made at the Project Site

(f) Neither inspection, testing, approval nor acceptance of the work in whole or in part, by the Owner or its agents shall relieve the Contractor or his sureties of full responsibility for materials furnished or work performed not in strict accordance with the Contract

24 Review by Owner

The Owner and its authorized representatives and agents shall have access to and be permitted to observe and review all work, materials, equipment, payrolls, personnel records, employment conditions, material invoices, and other relevant data and records pertaining to this Contract, provided, however that all instructions and approval with respect to the work will be given to the Contractor only by the Owner through its authorized representatives or agents

25 Final Inspection

When the Improvements included in this Contract are substantially completed, the Contractor shall notify the Owner in writing that the work will be ready for final inspection on a definite date which shall be stated in the notice The Owner will make the arrangements necessary to have final inspection commenced on the date stated in the notice, or as soon thereafter as is practicable

26 Deduction for Uncorrected Work

If the Owner deems it not expedient to require the Contractor to correct work not done in accordance with the Contract Documents, an equitable deduction from the Contract Price will be made by agreement between the Contractor and the Owner and subject to settlement, in case of dispute, as herein provided

27 Insurance

The Contractor shall not commence work under this contract until he has obtained all the insurance required under this paragraph and such insurance has been approved by the Owner

(a) Compensation Insurance The Contractor shall procure and shall maintain during the life of this contract Worker's Compensation Insurance as required by the State of Texas for all of his employees to be engaged in work at the site of the project under this contract and, in case of any such work sublet, the Contractor shall require the subcontractor similarly to provide Worker's Compensation Insurance for all of the employees to be engaged in such work unless such employees are covered by the protection afforded by the Contractor's Worker's Compensation Insurance

(b) Contractor's Public Liability and Property Damage Insurance and Vehicle Liability Insurance The Contractor shall procure and shall maintain during the life of this contract Contractor's Public Liability Insurance, Contractor's Property Damage Insurance and Vehicle Liability Insurance in the following amounts (See Section X General Terms and Conditions, No 26 Insurance)

(c) Proof of Insurance The Contractor shall furnish the Owner with certificates showing the type, amount, class of operations covered, effective dates and date of expiration of policies Such certificates shall also contain substantially the following statement "The insurance covered by this certificate will not be canceled or materially altered, except after ten (10) days written notice has been received by the Owner "

28 Warranty of Title

No material, supplies, or equipment to be installed or furnished under this Contract shall be purchased subject to any chattel mortgage or under a conditional sale, lease-purchase or other agreement by which an interest is retained by the seller or supplier The Contractor shall warrant good title to all materials, supplies, and equipment installed or incorporated in the work and upon completion of all work, shall deliver the same together with all improvements and appurtenances constructed or placed by him to the Owner free from any claims, liens, or charges Neither the Contractor nor any person, firm, or corporation furnishing any material or labor for any work covered by this Contract shall have any right to a lien upon any improvement or appurtenance Nothing contained in this paragraph, however, shall defeat or impair the right of persons furnishing materials or labor to recover under any law permitting such persons to look to funds due the Contractor in the hands of the Owner The provisions of this paragraph shall be inserted in all subcontracts and material contracts and notice of its provisions shall be given to all persons furnishing materials for the work when no formal contract is entered into for such materials

29 Warranty of Workmanship and Materials

Neither the final certificate of payment nor any provision in the Contract nor partial or entire use of the improvements included in this Contract by the Owner or the public shall constitute an acceptance of work not done in accordance with the Contract or relieve the Contractor of liability in respect to any express warranties or responsibility for faulty materials or workmanship The Contractor shall promptly remedy any defects in the work and pay for any damage to other work resulting therefrom which shall appear within a period of __12____ months from the date of final acceptance of the work

30 Compliance with Air and Water Acts

(a) In compliance with the Clean Air Act, as amended, 41 U S C Sec 7401 et seq , and the regulations of the Environmental Protection Agency with respect thereto, the Contractor agrees that

1) Any facility to be utilized in the performance of this contract or any subcontract shall not be a facility listed on the EPA List of Violating Facilities pursuant to 40 CFR 15 20

2) He will comply with all requirements of Section 114 of the Clean Air Act, as amended

3) Materials utilized in the project shall be free of any hazardous materials, except as may be specifically provided for in the specifications

(b) If the Contractor encounters existing material on sites owned or controlled by the Owner or in material sources that are suspected by visual observation or smell to contain hazardous materials, the Contractor shall immediately notify the Engineer and the Owner The Owner will be responsible for testing for and removal or disposition of hazardous materials on sites owned or controlled by the Owner The Owner may suspend the work, wholly or in part during the testing, removal or disposition of hazardous materials on sites owned or controlled by the Owner

31 Equal Employment Opportunity

(a) The Contractor will not discriminate against any employee or the applicant for employment because of race, color, religion, sex, gender, or national origin The Contractor will take affirmative action to ensure that applicants are employed, and that employees are treated during employment, without regard to their race, color, religion, sex, gender, or national origin Such action shall include, but not be limited to the following employment, promotion, demotion, or transfer, recruitment or recruitment advertising, layoff or termination, rates of pay or other forms of compensation, and selection for training, including apprenticeship The Contractor agrees to post in conspicuous places, available to employees and applicants for employment, notices to be provided by the owner

(b) The Contractor will, in all solicitations or advertisements for employees placed by or on behalf of the Contractor, state that all qualified applicants will receive consideration for employment without regard to race, color, religion, sex, or national origin

(c) The Contractor will cause the foregoing provisions to be inserted in all subcontracts for any work covered by this contract so that such provisions will be binding upon each subcontractor, provided that the foregoing provisions shall not apply to contracts or subcontracts for standard commercial supplies or raw materials

(d) The Contractor shall take affirmative actions to ensure equal employment opportunity The evaluation of the Contractor's compliance with these specifications shall be based upon its effort to achieve maximum results from its actions

(e) Contractors are encouraged to participate in voluntary associations which assist in fulfilling their affirmative action obligations

(f) The Contractor is required to provide equal employment opportunity and to take affirmative action for all minority groups, both male and female, and all women, both minority and non-minority

(g) The Contractor shall not use the affirmative action standards to discriminate against any person because of race, color, religion, sex, or national origin

(h) The Contractor shall not enter into any Subcontract with any person or firm debarred from Government contracts

(i) Nothing herein provided shall be construed as a limitation upon the application of other laws which establish different standards of compliance or upon the application of requirements for the hiring of local or other area residents

32 Affirmative Action for Workers with Disabilities

The Contractor will not discriminate against any employee or applicant for employment because of disability in regard to any position for which the employee or applicant for employment is qualified The Contractor agrees to take affirmative action to employ, advance in employment and otherwise treat qualified individuals with disabilities without discrimination based upon their disability in all employment practices such as the following employment, promotion, demotion or transfer, recruitment, advertising, layoff or termination, rates of pay or other forms of compensation, and selection for training, including apprenticeship

33 Section 109 of the Housing and Community Development Act of 1974

No person in the United States shall on the ground of race, color, national origin, or sex be excluded from participation in, be denied the benefits of, or be subjected to discrimination under any program or activity funded in whole or in part with funds made available under this title

34 The Provision of Local Training, Employment, and Business Opportunities

(a) To the greatest extent feasible opportunities for training and employment be given lower income residents of the project area and contracts for work in connection with the project be awarded to business concerns which are located in, or owned in substantial part by persons residing in the area of the project

(b) The Contractor will include this clause in every subcontract for work in connection with the project

35 Non Segregated Facilities

The Contractor certifies that he does not and will not maintain or provide for his employees any segregated facilities at any of his establishments, and that he does not and will not permit his employees any segregated facilities at any of his establishments, or permit his employees to perform their services at any location, under his control, where segregated facilities are maintained As used in this paragraph the term "segregated facilities" means any waiting rooms, work areas, rest rooms and washrooms, restaurants and other eating areas, time clocks, locker rooms and other storage or dressing areas, parking lots, drinking fountains, recreation or entertainment areas, transportation, and housing facilities provided for employees which are segregated by explicit directive or are in fact segregated on the basis of race, creed, color, or national origin, because of habit, local custom, or otherwise

36 Job Offices

(a) The Contractor and his subcontractors may maintain such office and storage facilities on the site as are necessary for the proper conduct of the work These shall be located so as to cause no interference to any work to be performed on the site The Owner shall be consulted with regard to locations

(b) Upon completion of the improvements, or as directed by the Owner, the Contractors shall remove all such temporary structures and facilities from the site, and leave the site of the work in the condition required by the Contract

37 Partial Use of Site Improvements

The Owner may give notice to the Contractor and place in use those sections of the improvements which have been completed, inspected and can be accepted as complying with the technical specifications and if in its opinion, each such section is reasonably safe, fit, and convenient for the use and accommodation for which it was intended, provided

(a) The use of such sections of the Improvements shall in no way impede the completion of the remainder of the work by the Contractor

(b) The Contractor shall not be responsible for any damages or maintenance costs due directly to the use of such sections

(c) The period of guarantee stipulated in the Section 29 hereof shall not begin to run until the date of the final acceptance of all work which the Contractor is required to construct under this Contract

38 Contract Documents and Drawings

The Local Public Agency will furnish the Contractor without charge 6 copies of the Contract Documents, including Technical Specifications and Drawings Additional copies requested by the Contractor will be furnished at cost

39 Contract Period

The work to be performed under this contract shall commence within the time stipulated by the Owner in the Notice to Proceed, and shall be fully completed within 180 calendar days thereafter

40 Liquidated Damages

Since the actual damages for any delay in completion of the work under this contract are impossible to determine, the Contractor and his Sureties shall be liable for and shall pay to the Owner the sum of Five Hundred Dollars ($500 00) as fixed, agreed and liquidated damages for each calendar day of delay from the above stipulated time for completion

XII

FEDERAL LABOR STANDARD PROVISIONS

Applicability

The Project or Program to which the construction work covered by this contract pertains is being assisted by the United States of America and the following Federal Labor Standards Provisions are included in this Contract pursuant to the provisions applicable to such Federal assistance

A 1 (i) Minimum Wages All laborers and mechanics employed or working upon the site of the work, will be paid unconditionally and not less often than once a week, and without subsequent deduction or rebate on any account (except such payroll deductions as are permitted by regulations issued by the Secretary of Labor under the Copeland Act (29 CFR Part 3), the full amount of wages and bona fide fringe benefits (or cash equivalents thereof) due at time of payment computed at rates not less than those contained in the wage determination of the Secretary of Labor which is attached hereto and made a part hereof, regardless of any contractual relationship which may be alleged to exist between the contractor and such laborers and mechanics Contributions made or costs reasonably anticipated for bona fide fringe benefits under Section l(b)(2) of the Davis-Bacon Act on behalf of laborers or mechanics are considered wages paid to such laborers or mechanics, subject to the provisions of 29 CFR 5 5(a)(1)(iv), also, regular contributions made or costs incurred for more than a weekly period (but not less often than quarterly) under plans, funds, or programs, which cover the particular weekly period are deemed to be constructively made or incurred during such weekly period

Such laborers and mechanics shall be paid the appropriate wage rate and fringe benefits on the wage determination for the classification of work actually performed, without regard to skill, except as provided in 29 CFR 5 5(a)(4) Laborers or mechanics performing work in more than one classification may be compensated at the rate specified for each classification for the time actually worked therein Provided, That the employer's payroll records accurately set forth the time spent in each classification in which work is performed The wage determination (including any additional classification and wage rates conformed under 29 CFR 5 5(a)(1)(ii) and the Davis-Bacon poster (WH-1321) shall be posted at all times by the contractor and its subcontractors at the site of the work in a prominent and accessible, place where it can be easily seen by the workers

(ii) (a) Any class of laborers or mechanics which is not listed in the wage determination and which is to be employed under the contract shall be classified in conformance with the wage determination HUD shall approve an additional classification and wage rate and fringe benefits therefor only when the following criteria have been met

(1) The work to be performed by the classification requested is not performed by a classification in the wage determination, and

(2) The classification is utilized in the area by the construction industry, and

(3) The proposed wage rate, including any bona fide fringe benefits, bears a reasonable relationship to the wage rates contained in the wage determination

(b) If the contractor and the laborers and mechanics to be employed in the classification (if known), or their representatives, and HUD or its designee agree on the classification and wage rate (including the amount designated for fringe benefits where appropriate), a report of the action taken shall be sent by HUD or its designee to the Administrator of the Wage and Hour Division, Employment Standards Administration, U S Department of Labor, Washington, D C 20210 The Administrator, or an authorized representative, will approve, modify, or disapprove every additional classification action within 30 days of receipt and so advise HUD or its designee or will notify HUD or its designee within the 30-day period that additional time is necessary (Approved by the Office of Management and Budget under OMB control number 1215-0140)

(c) In the event the contractor, the laborers or mechanics to be employed in the classification or their representatives, and HUD or its designee do not agree on the proposed classification and wage rate (including the *amount designated for fringe benefits, where appropriate*), HUD or its designee shall refer the questions, including the views of all interested parties and the recommendation of HUD or its designee, to the Administrator for determination The Administrator, or an authorized representative, will issue a determination within 30 days of receipt and so advise HUD or its designee or will notify HUD or its designee within the 30-day period that additional time is necessary (Approved by the Office of Management and Budget under OMB Control Number 1215-0140)

(d) The wage rate (including fringe benefits where appropriate) determined pursuant to subparagraphs (1)(ii)(b) or (c) of this paragraph, shall be paid to all workers performing work in the classification under this contract from the first day on which work is performed in the classification

(iii) Whenever the minimum wage rate prescribed in the contract for a class of laborers or mechanics includes a fringe benefit which is not expressed as an hourly rate, the contractor shall either pay the benefit as stated in the wage determination or shall pay another bona fide fringe benefit or an hourly cash equivalent thereof

(iv) If the contractor does not make payments to a trustee or other third person, the contractor may consider as part

of the wages of any laborer or mechanic the amount of any costs reasonably anticipated in providing bona fide fringe benefits under a plan or program, Provided, That the Secretary of Labor has found, upon the written request of the contractor, that the applicable standards of the Davis-Bacon Act have been met The Secretary of Labor may require the contractor to set aside in a separate account assets for the meeting of obligations under the plan or program (Approved by the Office of Management and Budget under OMB Control Number 1215-0140)

2 Withholding HUD or its designee shall upon its own action or upon written request of an authorized representative of the Department of Labor withhold or cause to be withheld from the contractor under this contract or any other Federal contract with the same prime contractor, or any other Federally-assisted contract subject to Davis-Bacon prevailing wage requirements, which is held by the same prime contractor so much of the accrued payments or advances as may be considered necessary to pay laborers and mechanics, including apprentices, trainees and helpers, employed by the contractor or any subcontractor the full amount of wages required by the contract In the event of failure to pay any laborer or mechanic, including any apprentice, trainee or helper, employed or working on the site of the work, all or part of the wages required by the contract, HUD or its designee may, after written notice to the contractor, sponsor, applicant, or owner, take such action as may be necessary to cause the suspension of any further payment, advance, or guarantee of funds until such violations have ceased HUD or its designee may, after written notice to the contractor, disburse such amounts withheld for and on account of the contractor or subcontractor to the respective employees to whom they are due The Comptroller General shall make such disbursements in the case of direct Davis-Bacon Act contracts

3 (i) Payrolls and basic records Payrolls and basic records relating thereto shall be maintained by the contractor during the course of the work preserved for a period of three years thereafter for all laborers and mechanics working at the site of the work Such records shall contain the name, address, and social security number of each such worker, his or her correct classification, hourly rates of wages paid (including rates of contributions or costs anticipated for bona fide fringe benefits or cash equivalents thereof of the types described in Section l(b)(2)(B) of the Davis-bacon Act), daily and weekly number of hours worked, deductions made and actual wages paid Whenever the Secretary of Labor has found under 29 CFR 5 5 (a)(1)(iv) that the wages of any laborer or mechanic include the amount of any costs reasonably anticipated in providing benefits under a plan or program described in Section l(b)(2)(B) of the Davis-Bacon Act, the contractor shall maintain records which show that the commitment to provide such benefits is enforceable, that the plan or program is financially responsible, and that the plan or program has been communicated in writing to the laborers or mechanics affected, and records which show the costs anticipated or the actual cost incurred in providing such benefits Contractors employing apprentices or trainees under approved programs shall maintain written evidence of the registration of apprenticeship programs and certification of trainee programs, the registration of the apprentices and trainees, and the ratios and wage rates prescribed in the applicable programs (Approved by the Office of Management and Budget under OMB Control Numbers 1215-0140 and 1215-0017)

(ii) (a) The contractor shall submit weekly for each week in which any contract work is performed a copy of all payrolls to HUD or its designee if the agency is a party to the contract, but if the agency is not such a party, the contractor will submit the payrolls to the applicant sponsor, or owner, as the case may be, for transmission to HUD or its designee The payrolls submitted shall set out accurately and completely all of the information required to be maintained under 29 CFR 5 5(a)(3)(i) except that full social security numbers and home addresses shall not be included on weekly transmittals Instead the payrolls shall only need to include an individually identifying number for each employee (e g , the last four digits of the employee's social security number) The required weekly payroll information may be submitted in any form desired Optional Form WH-347 is available for this purpose from the Wage and Hour Division Web site at http //www dol gov/esa/whd/forms/wh347instr htm or its successor site The prime contractor is responsible for the submission of copies of payrolls by all subcontractors Contractors and subcontractors shall maintain the full social security number and current address of each covered worker, and shall provide them upon request to HUD or its designee if the agency is a party to the contract, but if the agency is not such a party, the contractor will submit the payrolls to the applicant sponsor, or owner, as the case may be, for transmission to HUD or its designee, the contractor, or the Wage and Hour Division of the Department of Labor for purposes of an investigation or audit of compliance with prevailing wage requirements It is not a violation of this subparagraph for a prime contractor to require a subcontractor to provide addresses and social security numbers to the prime contractor for its own records, without weekly submission to HUD or its designee (Approved by the Office of Management and Budget under OMB Control Number 1215-0149)

(b) Each payroll submitted shall be accompanied by a "Statement of Compliance," signed by the contractor or subcontractor or his or her agent who pays or supervises the payment of the persons employed under the contract and shall certify the following

(1) That the payroll for the payroll period contains the information required to be provided under 29 CFR 5 5 (a)(3)(ii), the appropriate information is being maintained under 29 CFR 5 5(a)(3)(i), and that such information is correct and complete,

(2) That each laborer or mechanic (including each helper apprentice, and trainee) employed on the contract during the payroll period has been paid the full weekly wages earned, without rebate, either directly or indirectly, and that no deductions have been made either directly or indirectly from the full wages earned, other than permissible deductions as set forth in 29 CFR Part 3,

(3) That each laborer or mechanic has been paid not less than the applicable wage rates and fringe benefits or cash equivalents for the classification of work performed, as specified in the applicable wage determination incorporated into the contract

(c) The weekly submission of a properly executed certification set forth on the reverse side of Optional Form WH-347 shall satisfy the requirement for submission of the "Statement of Compliance" required by subparagraph A 3 (ii)(b)

(d) The falsification of any of the above certifications may subject the contractor or subcontractor to civil or criminal prosecution under Section 1001 of Title 18 and Section 231 of Title 31 of the United States Code

(iii) The contractor or subcontractor shall make the records required under subparagraph A 3 (i) available for inspection, copying, or transcription by authorized representatives of HUD or its designee or the Department of Labor, and shall permit such representatives to interview employees during working hours on the job If the contractor or subcontractor fails to submit the required records or to make them available, HUD or its designee may, after written notice to the contractor, sponsor, applicant or owner, take such action as may be necessary to cause the suspension of any further payment, advance, or guarantee of funds Furthermore, failure to submit the required records upon request or to make such records available may be grounds for debarment action pursuant to 29 CFR 5 12

4 Apprentices and Trainees

(i) **Apprentices** Apprentices will be permitted to work at less than the predetermined rate for the work they performed when they are employed pursuant to and individually registered in a bona fide apprenticeship program registered with the U S Department of Labor, Employment and Training Administration Office of Apprenticeship Training, Employer and Labor Services, or with a State Apprenticeship Agency recognized by the Office, or if a person is employed in his or her first 90 days of probationary employment as an apprentice in such an apprenticeship program, who is not individually registered in the program, but who has been certified by the Office of Apprenticeship Training, Employer and Labor Services or a State Apprenticeship Agency (where appropriate) to be eligible for probationary employment as an apprentice The allowable ratio of apprentices to journeymen on the job site in any craft classification shall not be greater than the ratio permitted to the contractor as to the entire work force under the registered program Any worker listed on a payroll at an apprentice wage rate, who is not registered or otherwise employed as stated above, shall be paid not less than the applicable wage rate on the wage determination for the classification of work actually performed In addition, any apprentice performing work on the job site in excess of the ratio permitted under the registered program shall be paid not less than the applicable wage rate on the wage determination for the work actually performed Where a contractor is performing construction on a project in a locality other than that in which its program is registered the ratios and wage rates (expressed in percentages of the journeyman's hourly rate) specified in the contractor's or subcontractor's registered program shall be observed Every apprentice must be paid at not less than the rate specified in the registered program for the apprentice's level of progress, expressed as a percentage of the journeymen hourly rate specified in the applicable wage determination Apprentices shall be paid fringe benefits in accordance with the provisions of the apprenticeship program If the apprenticeship program does not specify fringe benefits, apprentices must be paid the full amount of fringe benefits listed on the wage determination for the applicable classification If the Administrator determines that a different practice prevails for the applicable apprentice classification, fringes shall be paid in accordance with that determination In the event the Office of Apprenticeship Training, Employer and Labor Services, or a State Apprenticeship Agency recognized by the Office, withdraws approval of an apprenticeship program, the contractor will no longer be permitted to utilize apprentices at less than the applicable predetermined rate for the work performed until an acceptable program is approved

(ii) **Trainees** Except as provided in 29 CFR 5 16, trainees will not be permitted to work at less than the predetermined rate for the work performed unless they are employed pursuant ',to and individually registered in a program which has received prior approval, evidenced by formal certification by the U S Department of Labor, Employment and Training Administration The ratio of trainees to journeymen on the job site shall not be greater than permitted under the plan approved by the Employment and Training Administration Every trainee must be paid at not less than the rate specified in the approved program for the trainee's level of progress, expressed as a percentage of the journeyman hourly rate specified in the applicable wage determination Trainees shall be paid fringe benefits in accordance with the provisions of the trainee program If the trainee program does not mention fringe benefits, trainees shall be paid the full amount of fringe benefits listed on the wage determination unless the Administrator of the Wage and Hour Division determines that there is an apprenticeship program associated with the corresponding journeyman wage rate on the wage determination which provides for less than full fringe benefits for apprentices Any employee listed on the payroll at a trainee rate who is not registered and participating in a training plan approved by

the Employment and Training Administration shall be paid not less than the applicable wage rate on the wage determination for the work actually performed In addition, any trainee performing work on the job site in excess of the ratio permitted under the registered program shall be paid not less than the applicable wage rate on the wage determination for the work actually performed In the event the Employment and Training Administration withdraws approval of a training program, the contractor will no longer be permitted to utilize trainees at less than the applicable predetermined rate for the work performed until an acceptable program is approved

(iii) Equal employment opportunity The utilization of apprentices, trainees and journeymen under 29 CFR Part 5 shall be in conformity with the equal employment opportunity requirements of Executive Order 11246, as amended, and 29 CFR Part 30

5 Compliance with Copeland Act requirements The contractor shall comply with the requirements of 29 CFR Part 3 which are incorporated by reference in this contract

6 Subcontracts The contractor or subcontractor will insert in any subcontracts the clauses contained in subparagraphs 1 through 11 in this paragraph A and such other clauses as HUD or its designee may by appropriate instructions require, and a copy of the applicable prevailing wage decision, and also a clause requiring the subcontractors to include these clauses in any lower tier subcontracts The prime contractor shall be responsible for the compliance by any subcontractor or lower tier subcontractor with all the contract clauses in this paragraph

7 Contract termination, debarment A breach of the contract clauses in 29 CFR 5 5 may be grounds for termination of the contract and for debarment as a contractor and a subcontractor as provided in 29 CFR 5 12

8 Compliance with Davis-Bacon and Related Act Requirements All rulings and interpretations of the Davis-Bacon and Related Acts contained in 29 CFR Parts 1, 3, and 5 are herein incorporated by reference in this contract

9 Disputes concerning labor standards Disputes arising out of the labor standards provisions of this contract shall not be subject to the general disputes clause of this contract Such disputes shall be resolved in accordance with the procedures of the Department of Labor set forth in 29 CFR Parts 5, 6, and 7 Disputes within the meaning of this clause include disputes between the contractor (or any of its subcontractors) and HUD or its designee, the U S Department of Labor, or the employees or their representatives

10 (i) Certification of Eligibility By entering into this contract the contractor certifies that neither it (nor he or she) nor any person or firm who has an interest in the contractor's firm is a person or firm ineligible to be awarded Government contracts by virtue of Section 3(a) of the Davis-Bacon Act or 29 CFR 5 12(a)(1) or to be awarded HUD contracts or participate in HUD programs pursuant to 24 CFR Part 24

(ii) No part of this contract shall be subcontracted to any person or firm ineligible for award of a Government contract by virtue of Section 3(a) of the Davis-Bacon Act or 29 CFR 5 12(a)(1) or to be awarded HUD contracts or participate in HUD programs pursuant to 24 CFR Part 24

(iii) The penalty for making false statements is prescribed in the U S Criminal Code, 18 U S C 1001 Additionally, U S Criminal Code, Section 1 01 0, Title 18, U S C , "Federal Housing Administration transactions", provides in part "Whoever, for the purpose of influencing in any way the action of such Administration makes, utters or publishes any statement knowing the same to be false shall be fined not more than $5,000 or imprisoned not more than two years, or both '

11 Complaints, Proceedings, or Testimony by Employees No laborer or mechanic to whom the wage, salary, or other labor standards provisions of this Contract are applicable shall be discharged or in any other manner discriminated against by the Contractor or any subcontractor because such employee has filed any complaint or instituted or caused to be instituted any proceeding or has testified or is about to testify in any proceeding under or relating to the labor standards applicable under this Contract to his employer

B Contract Work Hours and Safety Standards Act The provisions of this paragraph B are applicable where the amount of the prime contract exceeds $100,000 As used in this paragraph, the terms "laborers" and "mechanics" include watchmen and guards

(1) Overtime requirements No contractor or subcontractor contracting for any part of the contract work which may require or involve the employment of laborers or mechanics shall require or permit any such laborer or mechanic in any workweek in which the individual is employed on such work to work in excess of 40 hours in such workweek unless such laborer or mechanic receives compensation at a rate not less than one and one-half times the basic rate of pay for all hours worked in excess of 40 hours in such workweek

(2) Violation, liability for unpaid wages, liquidated damages In the event of any violation of the clause set forth in subparagraph (1) of this paragraph, the contractor and any subcontractor responsible therefor shall be liable for the unpaid wages In addition, such contractor and subcontractor shall be liable to the United States (in the case of work done under contract for the District of Columbia or a territory, to such District or to such territory), for liquidated damages Such liquidated damages shall be computed with respect to each individual laborer or mechanic, including watchmen and guards, employed in violation of the clause set forth in subparagraph (1) of this paragraph, in the sum of $10 for each calendar day on which such individual was required or permitted to work in excess of the standard workweek of 40 hours without payment of the overtime wages required by the clause set forth in sub paragraph (1) of this paragraph

(3) Withholding for unpaid wages and liquidated damages HUD or its designee shall upon its own action or upon written request of an authorized representative of the Department of Labor withhold or cause to be withheld, from any moneys payable on account of work performed by the contractor or subcontractor under any such contract or any other Federal contract with the same prime contract, or any other Federally-assisted contract subject to the Contract Work Hours and Safety Standards Act which is held by the same prime contractor such sums as may be determined to be necessary to satisfy any liabilities of such contractor or subcontractor for unpaid wages and liquidated damages as provided in the clause set forth in subparagraph (2) of this paragraph

(4) Subcontracts The contractor or subcontractor shall insert in any subcontracts the clauses set forth in subparagraph (1) through (4) of this paragraph and also a clause requiring the subcontractors to include these clauses in any lower tier subcontracts The prime contractor shall be responsible for compliance by any subcontractor or lower tier subcontractor with the clauses set forth in subparagraphs (1) through (4) of this paragraph

C Health and Safety The provisions of this paragraph C are applicable where the amount of the prime contract exceeds $100,000

(1) No laborer or mechanic shall be required to work in surroundings or under working conditions which are unsanitary hazardous or dangerous to his health and safety as determined under construction safety and health standards promulgated by the Secretary of Labor by regulation

(2) The Contractor shall comply with all regulations issued by the Secretary of Labor pursuant to Title 29 Part 1926 and failure to comply may result in imposition of sanctions pursuant to the Contract Work Hours and Safety Standards Act, (Public Law 91-54, 83 Stat 96) 40 USC 3701 et seq

(3) The contractor shall include the provisions of this paragraph in every subcontract so that such provisions will be binding on each subcontractor The contractor shall take such action with respect to any subcontractor as the Secretary of Housing and Urban Development or the Secretary of Labor shall direct as a means of enforcing such provisions

XIII

TXCDBG
CONTRACTOR'S LOCAL OPPORTUNITY PLAN AND PROPOSED CONTRACTOR'S BREAKDOWN

CONTRACTOR'S LOCAL OPPORTUNITY PLAN

Crescent Engineering Co Inc dba Crescent Electric
(name of company) agrees to implement the following specific affirmative action steps directed at increasing the utilization of lower income residents and businesses within the (City/County) of Galveston

A To ascertain from the Grant Recipient's CDBG program official the exact boundaries of the project area and where advantageous, seek the assistance of local officials in preparing and implementing the affirmative action plan

B To attempt to recruit from within the city the necessary number of lower income residents through local advertising media, signs placed at the proposed site for the project, and community organizations and public or private institutions operating within and servicing the project area such as Service Employment and Redevelopment (SER), Opportunities Industrialization Center (OIC), Urban League, Concentrated Employment Program, Hometown Plan, or the U S Employment Service

C To maintain a list of all lower income residents who have applied either on their own or on referral from any source, and to employ such persons, if otherwise eligible and if a vacancy exists

D To insert this plan in all bid documents and to require all bidders on subcontracts to submit an affirmative action plan including utilization goals and the specific steps planned to accomplish these goals

E To insure that subcontracts (greater than $10,000), which are typically let on a negotiated rather than a bid basis in areas other than the covered project area, are also let on a negotiated basis, whenever feasible, in a covered project area

F To formally contact unions, subcontractors, and trade associations to secure their cooperation in this effort.

G To insure that all appropriate project area business concerns are notified of pending sub-contractual opportunities

H To maintain records, including copies of correspondence, memoranda, etc , which document that all of the above affirmative action steps have been taken

I To appoint or recruit an executive official of the company or agency as Equal Opportunity Officer to coordinate the implementation of this plan

J To maintain records concerning the amount and number of contracts, subcontracts, and purchases which contribute to objectives

K To maintain records of all projected work force needs for all phases of the project by occupation, trade, skill level, and number of positions and to update these projections based on the extent to which hiring meets these Local Opportunity objectives

As officers and representatives of Crescent Electric (name of company), we the undersigned have read and fully agree to this Plan, and become a party to the full implementation of the program and its provisions

Signature

President
Title

11-22-11
Date

PROPOSED CONTRACTS BREAKDOWN

Type of Contracts	No of Contracts	Approx Total Dollar Amount	Estimated No to local Business	Estimated $ Amount Local Business

ESTIMATED PROJECT WORKFORCE BREAKDOWN

Work Classifications	Total Estimated Positions	No of Positions Currently Filled	No of Positions not Filled	No of Positions to fill with L/M Residents
Totals				

XIV

TXCDBG
ATTORNEY'S REVIEW CERTIFICATION

ATTORNEY'S REVIEW CERTIFICATION

I, the undersigned, _____, the duly authorized and acting legal representative of the _____, do hereby certify as follows

I have examined the attached contract(s) and surety bonds and am of the opinion that each of the agreements may be duly executed by the proper parties, acting through their duly authorized representatives, that said representatives have full power and authority to execute said agreements on behalf of the respective parties, and that the agreements shall constitute valid and legally binding obligations upon the parties executing the same in accordance with terms, conditions and provisions thereof

Attorney's signature _____ Date _____

Print Attorney's Name _____

XV

TXCDBG
CERTIFICATION OF SECTION 3

CERTIFICATION OF BIDDER REGARDING SECTION 3 AND SEGREGATED FACILITIES

Crescent Engineering Co Inc
Name of Prime Contractor dba Crescent Electric

Santa Fe High School Generator
LJA #0384-9003E
Bid # B111056
Project Name & Number

The undersigned hereby certifies that

(a) Section 3 provisions are included in the contract

(b) A written Section 3 plan was prepared and submitted as part of the bid proceedings (if bid equals or exceeds $10,000)

(c) No segregated facilities will be maintained

Name Clarence Broze Jr
Name and Title of Signer (Print or Type)

Signature

11-22-11
Date

§ 135.38 Section 3 clause.

All section 3 covered contracts shall include the following clause (referred to as the section 3 clause)

A The work to be performed under this contract is subject to the requirements of section 3 of the Housing and Urban Development Act of 1968, as amended, 12 U S C 1701u (section 3) The purpose of section 3 is to ensure that employment and other economic opportunities generated by HUD assistance or HUD-assisted projects covered by section 3, shall, to the greatest extent feasible, be directed to low- and very low-income persons, particularly persons who are recipients of HUD assistance for housing

B The parties to this contract agree to comply with HUD's regulations in 24 CFR part 135, which implement section 3 As evidenced by their execution of this contract, the parties to this contract certify that they are under no contractual or other impediment that would prevent them from complying with the part 135 regulations

C The contractor agrees to send to each labor organization or representative of workers with which the contractor has a collective bargaining agreement or other understanding, if any, a notice advising the labor organization or workers' representative of the contractor s commitments under this section 3 clause, and will post copies of the notice in conspicuous places at the work site where both employees and applicants for training and employment positions can see the notice The notice shall describe the section 3 preference, shall set forth minimum number and job titles subject to hire, availability of apprenticeship and training positions, the qualifications for each, and the name and location of the person(s) taking applications for each of the positions, and the anticipated date the work shall begin

D The contractor agrees to include this section 3 clause in every subcontract subject to compliance with regulations in 24 CFR part 135, and agrees to take appropriate action, as provided in an applicable provision of the subcontract or in this section 3 clause, upon a finding that the subcontractor is in violation of the regulations in 24 CFR part 135 The contractor will not subcontract with any subcontractor where the contractor has notice or knowledge that the subcontractor has been found in violation of the regulations in 24 CFR part 135

E The contractor will certify that any vacant employment positions, including training positions, that are filled (1) after the contractor is selected but before the contract is executed, and (2) with persons other than those to whom the regulations of 24 CFR part 135 require employment opportunities to be directed, were not filled to circumvent the contractor's obligations under 24 CFR part 135

F Noncompliance with HUD's regulations in 24 CFR part 135 may result in sanctions, termination of this contract for default, and debarment or suspension from future HUD assisted contracts

G With respect to work performed in connection with section 3 covered Indian housing assistance, section 7(b) of the Indian Self-Determination and Education Assistance Act (25 U S C 450e) also applies to the work to be performed under this contract Section 7(b) requires that to the greatest extent feasible (i) preference and opportunities for training and employment shall be given to Indians, and (ii) preference in the award of contracts and subcontracts shall be given to Indian organizations and Indian-owned Economic Enterprises Parties to this contract that are subject to the provisions of section 3 and section 7(b) agree to comply with section 3 to the maximum extent feasible, but not in derogation of compliance with section 7(b)

XVI

COPELAND ACT
AND
CERTIFICATION REGARDING LOBBYING

Title 29 — LABOR

Subtitle A — Office of the Secretary of Labor

PART 3 — CONTRACTORS AND SUBCONTRACTORS ON PUBLIC BUILDING OR PUBLIC WORK FINANCED IN WHOLE OR IN PART BY LOANS OR GRANTS FROM THE UNITED STATES

Sec
3 1 Purpose and scope
3 2 Definitions
3 3 Weekly statement with respect to payment of wages
3 4 Submission of weekly statements and the preservation and inspection of weekly payroll records.
3 5 Payroll deductions permissible without application to or approval of the Secretary of Labor
3 6 Payroll deductions permissible with the approval of the Secretary of Labor
3 7 Applications for the approval of the Secretary of Labor
3 8 Action by the Secretary of Labor upon applications
3 9 Prohibited payroll deductions
3.10 Methods of payment of wages
3.11 Regulations part of contract

AUTHORITY. The provisions of this Part 3 issued under R S 161, sec 2, 48 Stat §48, Reorg Plan No 14 of 1950, 64 Stat 1267, 5 U.S.C Appendix; 5 U S C 301, 40 U.S C 276c

SOURCE The provisions of this Part 3 appear at 29 F.R 97, Jan 4, 1964, unless otherwise noted

Section 3.1 Purpose and Scope.

This part prescribes "anti-kickback" regulations under section 2 of the Act of June 13, 1934, as amended (40 U S.C. 276c), popularly known as the Copeland Act. This part applies to any contract which is subject to Federal wage standards and which is for the construction, prosecution, completion, or repair of public buildings, public works or buildings or works financed in whole or in part by loans or grants from the United States The part is intended to aid in the enforcement of the minimum wage provisions of the Davis-Bacon Act and the various statutes dealing with Federally-assisted construction that contain similar minimum wage provisions, including those provisions which are not subject to Reorganization Plan No. 14 (e g., the College Housing Act of 1950, the Federal Water Pollution Control Act, and the Housing Act of 1959), and in the enforcement of the overtime provisions of the Contract Work Hours Standards Act whenever they are applicable to construction work. The part details the obligation of contractors and subcontractors relative to the weekly submission of statements regarding the wages paid on work covered thereby; sets forth the circumstances and procedures governing the making of payroll deductions from the wages of those employed on such work, and delineates the methods of payment permissible on such work.

Section 3.2 Definitions.

As used in the regulations in this part

(a) The terms "building" or "work" generally include construction activity as distinguished from manufacturing, furnishing of materials, or servicing and maintenance work The terms include, without limitation, buildings, structures, and improvements of all types, such as bridges, dams, plants, highways, parkways, streets, subways, tunnels, sewers, mains, powerlines, pumping stations, railways, airports, terminals, docks, piers, wharves, ways, lighthouses, buoys, jetties, breakwaters, levees, and canals; dredging, shoring, scaffolding, drilling, blasting, excavating, clearing, and landscaping Unless conducted in connection with and at the site of such a building or work as is described in the foregoing sentence, the manufacture or furnishing of materials, articles, supplies, or equipment (whether or not a Federal or State

agency acquires title to such materials, articles, supplies, or equipment during the course of the manufacture or furnishing, or owns the materials from which they are manufactured or furnished) is not a "building" or "work" within the meaning of the regulations in this part.

(b) The terms "construction," "prosecution," "completion," or "repair" mean all types of work done on a particular building or work at the site thereof, including, without limitation, altering, remodeling, painting and decorating, the transporting of materials and supplies to or from the building or work by the employees of the construction contractor or construction subcontractor, and the manufacturing or furnishing of materials, articles, supplies, or equipment on the site of the building or work, by persons employed at the site by the contractor or subcontractor

(c) The terms "public building" or "public work" include building or work for whose construction, prosecution, completion, or repair, as defined above, a Federal agency is a contracting party, regardless of whether title thereof is in a Federal agency

(d) The term "building or work financed in whole or in part by loans or grants from the Unites States" includes building or work for whose construction, prosecution, completion, or repair, as defined above, payment or part payment is made directly or indirectly from funds provided by loans or grants by a Federal agency The term includes building or work for which the Federal assistance granted is in the form of loan guarantees or insurance.

(e) Every person paid by a contractor or subcontractor in any manner for his labor in the construction, prosecution, completion, or repair of a public building or public work or building or work financed in whole or in part by loans or grants from the United States is "employed" and receiving "wages," regardless of any contractual relationship alleged to exist between him and the real employer

(f) The term "any affiliated person" includes a spouse, child, parent, or other close relative of the contractor or subcontractor, a partner or officer of the contractor or subcontractor, a corporation closely connected with the contractor or subcontractor as parent, subsidiary or otherwise, and an officer or agent of such corporation

(g) The term "Federal agency" means the United States, the District of Columbia, and all executive departments, independent establishments, administrative agencies, and instrumentality's of the United States and of the District of Columbia, including corporations, all or substantially all of the stock of which is beneficially owned by the United States, by the District of Columbia, or any of the foregoing departments, establishments, agencies, and instrumentality's.

{29 FR 97, Jan 4, 1964, as amended at 33 FR 32575, Nov 27, 1973}

Section 3.3 Weekly statement with respect to payment of wages.

(a) As used in this section, the term "employee" shall not apply to persons in classifications higher than that of laborer or mechanic and those who are the immediate supervisors of such employees.

(b) Each contractor or subcontractor engaged in the construction, prosecution, completion, or repair of any public building or public work, or building or work financed in whole or in part by loans or grants from the United States, shall furnish each week a statement with respect to the wages paid each of its employees engaged on work covered by 29 CFR Parts 3 and 5 during the preceding weekly payroll period This statement shall be executed by the contractor or subcontractor or by an authorized officer of employee of the contractor or subcontractor who supervises the payment of wages, and shall be on form WH 348, "Statement of Compliance," or on an identical form on the back of WH 347, "Payroll (For Contractors Optional Use)" or on any form with identical wording Sample copies of WH 347 and WH 348 may be obtained from the Government contracting or sponsoring agency, and copies of these forms may be purchased at the Government Printing Office.

(c) The requirements of this section shall not apply to any contract of $2,000 or less

(d) Upon a written finding by the head of a Federal agency, the Secretary of Labor may provide reasonable limitations, variations,

tolerances, and exemptions from the requirements of this section subject to such conditions as the Secretary of Labor may specify.
{29 F R 95, Jan 4, 1964, as amended at 33 F R 10186, July 17, 1968}

Section 3.4 Submission of weekly statements and the preservation and inspection of weekly payroll records.

(a) Each weekly statement required under §3 3 shall be delivered by the contractor or subcontractor, within seven days after the regular payment date of the payroll period, to a representative of a Federal or State agency in charge at the site of the building or work, or if there is no representative of a Federal or State agency at the site of the building or work, the statement shall be mailed by the contractor or subcontractor, within such time, to a Federal or State agency contracting for or financing the building or work After such examination and check as may be made, such statement, or a copy thereof, shall be kept available, or shall be transmitted together with a report of any violation, in accordance with applicable procedures prescribed by the United States Department of Labor

(b) Each contractor or subcontractor shall preserve his weekly payroll records for a period of three years from date of completion of the contract. The payroll records shall set out accurately and completely the name and address of each laborer and mechanic, his correct classification, rate of pay, daily and weekly number of hours worked, deductions made, and actual wages paid. Such payroll records shall be made available at all times for inspection by the contracting officer or his authorized representative, and by authorized representatives of the Department of Labor.

Section 3.5 Payroll deductions permissible without application to or approval of the Secretary of Labor.

Deductions made under the circumstances or in the situations described in the paragraphs of this section may be made without application to and approval of the Secretary of Labor.

(a) Any deduction made in compliance with the requirements of Federal, State, or local law, such as Federal or State withholding income taxes and Federal social security taxes.

(b) Any deduction of sums previously paid to the employee as a bona fide prepayment of wages when such prepayment is made without discount or interest. A "bona fide prepayment of wages" is considered to have been made only when cash or its equivalent has been advanced to the person employed in such manner as to give him complete freedom of disposition of the advanced funds

(c) Any deduction of amounts required by court process to be paid to another, unless, the deduction is in favor of the contractor, subcontractor or any affiliated person, or when collusion or collaboration exists

(d) Any deduction constituting a contribution on behalf of the person employed to funds established by the employer or representatives of employees, or both, for the purpose of providing either from principal or income, or both, medical or hospital care, pensions, or annuities on retirement, death benefits, compensation for injuries, illness, accidents, sickness, or disability, or for insurance to provide any of the foregoing, or unemployment benefits, vacation pay, savings accounts, or similar payments for the benefit of employees, their families and dependents Provided, however, That the following standards are met (1) The deduction is not otherwise prohibited by law, (2) it is either (i) Voluntarily consented to by the employee in writing and in advance of the period in which the work is to be done and such consent is not a condition either for the obtaining of or for the continuation of employment, or (ii) provided for in a bona fide collective bargaining agreement between the contractor or subcontractor and representatives of its employees; (3) no profit or other benefit is otherwise obtained, directly or indirectly, by the contractor or subcontractor or any affiliated person in the form of commission, dividend, or otherwise, and (4) the deductions shall serve the convenience and interest of the employee

(e) Any deduction contributing toward the purchase of United States Defense Stamps

and Bonds when voluntarily authorized by the employee

(f) Any deduction requested by the employee to enable him to repay loans to or to purchase shares in credit unions organized and operated in accordance with Federal and State credit union statutes.

(g) Any deduction voluntarily authorized by the employee for the making of contributions to governmental or quasi-governmental agencies, such as the American Red Cross

(h) Any deduction voluntarily authorized by the employee for the making of contributions to Community Chests, United Givers Funds, and similar charitable organizations.

(i) Any deductions to pay regular union initiation fees and membership dues, not including fines or special assessments: Provided, however, That a collective bargaining agreement between the contractor or subcontractor and representatives of its employees provides for such deductions and the deductions are not otherwise prohibited by law

(j) Any deduction not more than for the "reasonable cost" of board, lodging, or other facilities meeting the requirements of section 3(m) of the Fair Labor Standards Act of 1938, as amended, and Part 531 of this title. When such a deduction is made the additional records required under §516.27(a) of this title shall be kept.

(k) Any deduction for the cost of safety equipment of nominal value purchased by the employee as his own property for his personal protection in his work, such as safety shoes, safety glasses, safety gloves, and hard hats, if such equipment is not required by law to be furnished by the employer, if such deduction is not violative of the Fair Labor Standards Act or prohibited by other law, if the cost on which the deduction is based does not exceed the actual cost to the employer where the equipment is purchased from him and does not include any direct or indirect monetary return to the employer where the equipment is purchased from a third person, and if the deduction is either (1) voluntarily consented to be the employee in writing and in advance of the period in which the work is to be done and such consent is not a condition either for the obtaining of employment or its continuance, or (2) provided for in a bona fide collective bargaining agreement between the contractor or subcontractor and representatives of its employees

(36 F R 9770, May 28, 1971)

Section 3.6 Payroll deductions permissible with the approval of the Secretary of Labor.

Any contractor or subcontractor may apply to the Secretary of Labor for permission to make any deduction not permitted under §3.5. The Secretary may grant permission whenever he finds that.

(a) The contractor, subcontractor, or any affiliated person does not make a profit or benefit directly or indirectly from the deduction either in the form of a commission, dividend, or otherwise;

(b) The deduction is not otherwise prohibited by law,

(c) The deduction is either (1) voluntarily consented to by the employee in writing and in advance of the period in which the work is to be done and such consent is not a condition either for the obtaining of employment or its continuance, or (2) provided for in a bona fide collective bargaining agreement between the contractor or subcontractor and representatives of its employees, and

(d) The deduction serves the convenience and interest of the employee.

Section 3.7 Applications for the approval of the Secretary of Labor.

Any application for the making of payroll deductions under §3.6 shall comply with the requirements prescribed in the following paragraphs of this section:

(a) The application shall be in writing and shall be addressed to the Secretary of Labor

(b) The application need not identify the contract or contracts under which the work in question is to be performed. Permission will be given for deductions on all current and future contracts of the applicant for a period of

1 year A renewal of permission to make such payroll deduction will be granted upon the submission of an application which makes reference to the original application, recites the date of the Secretary of Labor's approval of such deductions, states affirmatively that there is continued compliance with the standards set forth in the provisions of §3.6, and specifies any conditions which have changed in regard to the payroll deductions.
(36 F R 9770, May 28, 1971)

(c) The application shall state affirmatively that there is compliance with the standards set forth in the provisions of §3 6 The affirmation shall be accompanied by a full statement of the facts indicating such compliance.

(d) The application shall include a description of the proposed deduction, the purpose to be served thereby, and the classes of laborers or mechanics from whose wages the proposed deduction would be made.

(e) The application shall state the name and business of any third person to whom any funds obtained from the proposed deductions are to be transmitted and the affiliation of such person, if any, with the applicant.

Section 3.8 Action by the Secretary of Labor upon applications.

The Secretary of Labor shall decide whether or not the requested deduction is permissible under provisions of §3.6; and shall notify the applicant in writing of his decision.

Section 3.9 Prohibited payroll deductions.

Deductions not elsewhere provided for by this part and which are not found to be permissible under §3.6 are prohibited.

Section 3.10 Methods of payment of wages.

The payment of wages shall be by cash, negotiable instruments payable on demand, or the additional forms of compensation for which deductions are permissible under this part No other methods of payment shall be recognized on work subject to the Copeland Act.

Section 3.11 Regulations part of contract.

All contracts made with respect to the construction, prosecution, completion, or repair of any public building or public work or building or work financed in whole or in part by loans or grants from the United States covered by the regulations in this part shall expressly bind the contractor or subcontractor to comply with such of the regulations in this part as may be applicable. In this regard, see §5 5(a) of this subtitle

Certification Regarding Lobbying for
Contracts, Grants, Loans, and Cooperative Agreements

The undersigned Clarence Broze Jr of Crescent Engineering Co Inc dba Crescent Electric
certifies, to the best of its knowledge and belief, that

(1) No Federal appropriated funds have been paid or will be paid, by or on behalf of the undersigned, to any person for influencing or attempting to influence an officer or employee of an agency, a Member of Congress, an officer or employee of Congress, or an employee of a Member of Congress in connection with the awarding of any Federal contract, the making of any Federal grant, the making of any Federal loan, the entering into of any cooperative agreement, and the extension, continuation, renewal, amendment, or modification of any Federal contract, grant, loan or cooperative agreement.

(2) If any funds other than Federal appropriated funds have been paid or will be paid to any person for influencing or attempting to influence an officer or employee of any agency, a Member of Congress, an officer or employee of Congress, or an employee of a Member of Congress in connection with this Federal contract, grant, loan, or cooperative agreement, the undersigned shall complete and submit Standard Form – LLL, "Disclosure Form to Report Lobbying," in accordance with its instructions.

(3) The undersigned shall require that the language of this certification be included in the award documents for all subawards at all tiers (including subcontracts, subgrants, and contracts under grants, loans, and cooperative agreements) and that all subrecipients shall certify and disclose accordingly.

This certification is a material representation of fact upon which reliance was placed when this transaction was made or entered into. Submission of this certification is a prerequisite for making or entering into this transaction imposed by section 1352, title 31, U.S Code. Any person who fails to file the required certification shall be subject to a civil penalty of not less than $10,000 and not more that $100,000 for each such failure.

Signed: Clarence Broze Jr Date: 11-22-11

Title President

n.a.

DISCLOSURE OF LOBBYING ACTIVITIES

Approved by OMB 0348 0046

Complete this form to disclose lobbying activities pursuant to 31 U S C 1352
(See reverse for public burden disclosure.)

1. Type of Federal Action:	2. Status of Federal Action:	3. Report Type:
☐ a. contract b grant c cooperative agreement d loan e. loan guarantee f. loan insurance	☐ a. bid/offer/application b. initial award c post-award	☐ a. initial filing b material change **For Material Change Only** year _____ quarter _____ date of last report _____

4. Name and Address of Reporting Entity:	5. If Reporting Entity in No. 4 is a Subawardee, Enter Name and Address of Prime:
☐ Prime ☐ Subawardee Tier _____, *if known:* Congressional District, *if known:*	Congressional District, *if known*
6. Federal Department/Agency:	**7. Federal Program Name/Description:** CFDA Number, *if applicable.* _____
8. Federal Action Number, *if known:*	**9. Award Amount, *if known:*** $
10. a. Name and Address of Lobbying Entity (*if individual, last name, first name, MI*):	**b. Individuals Performing Services** (*including address if different from No 10a*) (*last name, first name, MI*)

(attach Continuation Sheet(s) SF-LLLA, if necessary)

11. Amount of Payment (*check all that apply*):	13. Type of Payment (*check all that apply*).
$ _____ ☐ actual ☐ planned	☐ a. retainer ☐ b. one-time fee ☐ c. commission ☐ d. contingent fee ☐ e. deferred ☐ f. other; specify. _____
12. Form of Payment (*check all that apply*):	
☐ a. cash ☐ b. in-kind, specify. nature _____ value _____	

14. Brief Description of Services Performed or to be Performed and Date(s) of Service, including officer(s), employee(s), or Member(s) contacted, for Payment indicated in Item 11:

(attach Continuation Sheet(s) SF-LLLA, if necessary)

15 Continuation Sheet(s) SF-LLLA attached ☐ Yes ☐ No

16. Information requested through this form is authorized by title 31 U.S.C section 1352. This disclosure of lobbying activities is a material representation of fact upon which reliance was placed by the tier above when this transaction was made or entered into. This disclosure is required pursuant to 31 U.S.C. 1352. This information will be reported to the Congress semi annually and will be available for public inspection. Any person who fails to file the required disclosure shall be subject to a civil penalty of not less that $10 000 and not more than $100 000 for each such failure.

Signature: [signature]
Print Name: Clarence Broze Jr
Title: President
Telephone No: 4099352416 Date: 11-22-11

Federal Use Only:

Authorized for Local Reproduction
Standard Form LLL (Rev. 7-97)

INSTRUCTIONS FOR COMPLETION OF SF-LLL, DISCLOSURE OF LOBBYING ACTIVITIES

This disclosure form shall be completed by the reporting entity, whether subawardee or prime Federal recipient, at the initiation or receipt of a covered Federal action, or a material change to a previous filing, pursuant to title 31 U S C section 1352 The filing of a form is required for each payment or agreement to make payment to any lobbying entity for influencing or attempting to influence an officer or employee of any agency, a Member of Congress, an officer or employee of Congress, or an employee of a Member of Congress in connection with a covered Federal action Use the SF-LLLA Continuation Sheet for additional information if the space on the form is inadequate Complete all items that apply for both the initial filing and material change report Refer to the implementing guidance published by the Office of Management and Budget for additional information

1 Identify the type of covered Federal action for which lobbying activity is and/or has been secured to influence the outcome of a covered Federal action

2 Identify the status of the covered Federal action

3 Identify the appropriate classification of this report If this is a followup report caused by a material change to the information previously reported, enter the year and quarter in which the change occurred Enter the date of the last previously submitted report by this reporting entity for this covered Federal action

4 Enter the full name, address, city, State and zip code of the reporting entity Include Congressional District, if known Check the appropriate classification of the reporting entity that designates if it is, or expects to be, a prime or subaward recipient Identify the tier of the subawardee, e g , the first subawardee of the prime is the 1st tier Subawards include but are not limited to subcontracts, subgrants and contract awards under grants

5 If the organization filing the report in item 4 checks "Subawardee," then enter the full name, address, city, State and zip code of the prime Federal recipient Include Congressional District, if known

6 Enter the name of the Federal agency making the award or loan commitment Include at least one organizational level below agency name, if known For example, Department of Transportation, United States Coast Guard

7 Enter the Federal program name or description for the covered Federal action (item 1) If known, enter the full Catalog of Federal Domestic Assistance (CFDA) number for grants, cooperative agreements, loans, and loan commitments

8 Enter the most appropriate Federal identifying number available for the Federal action identified in item 1 (e g , Request for Proposal (RFP) number, Invitation for Bid (IFB) number; grant announcement number, the contract, grant, or loan award number, the application/proposal control number assigned by the Federal agency) Include prefixes, e g , "RFP-DE-90-001 "

9 For a covered Federal action where there has been an award or loan commitment by the Federal agency, enter the Federal amount of the award/loan commitment for the prime entity identified in item 4 or 5

10 (a) Enter the full name, address, city, State and zip code of the lobbying entity engaged by the reporting entity identified in item 4 to influence the covered Federal action

(b) Enter the full names of the individual(s) performing services, and include full address if different from 10 (a) Enter Last Name, First Name, and Middle Initial (MI)

11 Enter the amount of compensation paid or reasonably expected to be paid by the reporting entity (item 4) to the lobbying entity (item 10) Indicate whether the payment has been made (actual) or will be made (planned) Check all boxes that apply If this is a material change report, enter the cumulative amount of payment made or planned to be made

12 Check the appropriate box(es) Check all boxes that apply If payment is made through an in-kind contribution, specify the nature and value of the in-kind payment

13 Check the appropriate box(es) Check all boxes that apply If other, specify nature

14 Provide a specific and detailed description of the services that the lobbyist has performed, or will be expected to perform, and the date(s) of any services rendered Include all preparatory and related activity, not just time spent in actual contact with Federal officials Identify the Federal official(s) or employee(s) contacted or the officer(s), employee(s), or Member(s) of Congress that were contacted

15 Check whether or not a SF-LLLA Continuation Sheet(s) is attached

16 The certifying official shall sign and date the form, print his/her name, title, and telephone number

According to the Paperwork Reduction Act as amended, no persons are required to respond to a collection of information unless it displays a valid OMB Control Number The valid OMB control number for this information collection is OMB No 0348-0046 Public reporting burden for this collection of information is estimated to average 30 minutes per response, including time for reviewing instructions, searching existing data sources, gathering and maintaining the data needed, and completing and reviewing the collection of information Send comments regarding the burden estimate or any other aspect of this collection of information, including suggestions for reducing this burden, to the Office of Management and Budget, Paperwork Reduction Project (0348-0046), Washington, DC 20503

XVII

TXCDBG

STATEMENT OF BIDDER'S QUALIFICATIONS

CONTRACTOR CERTIFICATIONS

AND

SECTION 504 CERTIFICATION

STATEMENT OF BIDDER'S QUALIFICATIONS

All questions must be answered and the data given must be clear and comprehensive This statement must be notarized If necessary, questions may be answered on separate attached sheets The Bidder may submit any additional information he desires

Name of Bidder Crescent Engineering Co. Inc dba Crescent Electric Date Organized 2-16-1988

Address 1319 First St, La Marque, TX Date Incorporated 2-16-1988

Number of Years in contracting business under present name 23

CONTRACTS ON HAND:

Contract	Amount $	Completion Date
HDR Project 09-110	1,042,305.00	
Industrial TX	270,945.00	
Galv Mid Co. Annex	2,704,198.00	

Type of work performed by your company Electrical Contracting

Have you ever failed to complete any work awarded to you? no
Have you ever defaulted on a contract? no

List the projects most recently completed by your firm (include project of similar importance)

Project	Amount $	Mo/Yr Completed
Tetra Tech Tesoro	269,719.00	12-2010
Port of Galveston	1,446,000.00	8-2010
MUD 12	17,514.00	8-2010

Major equipment available for **this** contract Digger Bucket Truck, Crane, Skid Loader

Attach resume(s) for the principal member(s) of your organization, including the officers as well as the proposed superintendent for the project

Credit available $ 500,000.00 / 800,000.00 Bank reference Moody National / Texas First

The undersigned hereby authorizes and requests any person, firm, or corporation to furnish any information requested by the County of Galveston in verification of the recitals comprising this Statement of Bidder's Qualifications

Executed this 22nd day of November, 2011

By (signature) [signature] Title President

(print name) Clarence Bicze Jr

April 6, 2011

Crescent Electric jobs completed satisfactorily in the last five years of approximately the size and scope of the current bid ($150K to $500K).

UTMB Friendswood Clinic Contract amount $225,356 Owners representative R L H Construction, Mr Bobby Metz, (409) 740-6988

Rosenberg Library Contract amount $223,960 Owner's representative Mr John Augelli, (409) 763-8854

Texas A&M Contract amount $184,365 Owner's representative Ms Tammy Lobaugh, (409) 740-4404

Santa Fe ISD Contract amount $224,764 Owner's representative Mr Joel Summerall (409) 925-3526 ext 295

St Mary's Cathedral, Galveston Contract amount $386,574 Owner's Representative Mr Joe Oppenheimer, Architect, (336)721-1711

City of Dickinson Fire Station Contract amount $377,930, Owner's representative J W Kelso, Mr John Kelso, (409)740-0266

USCG-Contract amount $221,459 Owner's Representative Mr Wayne Moore, (409) 766-5653

Wiess Elementary Contract amount $226,287 Owner's Representative Mr Paul Byers (409) 762-8181

Port of Galveston Cruise Terminal #1 Contract amount $444,574 Owner's representative Mr Bernie Curran (409) 766-6183

Hurricane Ike repairs to Pelican Island Bridge Contract amount $377,174 Owner's Representative Mr Frank Incomprara (409) 762-3988

Repairs and rehabilitation of utilities and associated systems on North and South piers, Galveston, Texas Contract amount $211,219, Owners representative SMR Construction, Inc Mr Samar Basher, (972) 231-7272

Hurricane Ike Repairs to Pier D, Galveston, Texas Contract amount $1,446,000 Owner – Port of Galveston, P O Box 328, Galveston, Texas, 77553 The owner's representative is Mr Pat Wade, (281) 468-3936

USCG Armory training renovations- contract amount $289,182 00 Owner's representative is Tetra Tech Tesoro, Mr Jim Vachon 1-757-518-8491

Crescent Engineering Co Inc dba Crescent Electric has maintained a permanent place of business since 1946 The office is located at

1319 First St
La Marque, TX 77568

Mailing
P O Box 36
La Marque, TX 77568

Office # 409-935-2416
Fax# 409-935-2428
E mail crescentelectric@comcast net

Contact Persons
A/R Teresa S Gonzales
Human Resources Terri Cooley
Project Manager Chris M Hines
President Clarence Broze, Jr

Crescent Electric reference information from Governmental entities and higher education organizations within Galveston County

County of Galveston –

Multiple maintenance and construction contracts totaling approximately $1 2 Million Mr Bruce Hughes, (409) 770-5371 Maintenance contract for 4 years

---

Galveston County Navigation District Number 1 –

Multiple small and medium service plus major post-Ike repair, total approximately $600,000 Mr Frank Incomprara, (409) 762-3988 10+ years

---

City of Texas City –

City hall fire suppression system and installation and maintenance of emergency community alarms, approximately $300,000, Mr Calvin Bremmer (409) 502-8893 Texas City maintenance Contract (4 years) $126,000

College of the Mainland –

Maintenance and construction contracts, Approximately $550,000 Mr Pete Early, (409) 938-1211 x8404 10+ years

---

Texas A&M Galveston –

Maintenance and construction in excess of $800,000 Ms Tammy Lobaugh or Mr David Lang, (409) 740-4553 Maintenance contract for 7+ years

---

Galveston ISD –

Misc small and medium jobs in excess of $530,000 Mr Paul Byers (409) 762-8181 Buy Board Contract Rates 10+ years

---

Galveston College –

Miscellaneous small jobs in area of $57,000 Mr Scott Pearse, (409) 763-6551 Maintenance 3 years

---

Texas City ISD –

Miscellaneous small jobs, in area of $33,000, Rick Froeschl 409-942-2813 10+ years

---

Santa Fe ISD –
Large and small maintenance and construction Projects Excess of $300,000 00
Joel Summerall, 409-935-3526 ext 295

Port of Texas City –

Miscellaneous, approximately$110,000 00 Dennis Jennings 409-945-4461

La Marque ISD –

Miscellaneous, approximately $250,000 00 Mr Tambrella, 409-908-5058

City of La Marque –

Miscellaneous, approximately $136,000 Eric Gage 409-938-9200 10+ years

---

City of Galveston –

Miscellaneous, approximately $68,000 10+ years

Port of Galveston –

Major post-Ike repairs, approximately $1,400,000, Mr Pat Wade (281) 468-3936

Galveston Island State Park –

Miscellaneous small projects, approximately $30,000

US Coast Guard Base

Projects in excess of $320,000 00, Mr Wayne Moore 409-766-5653

UTMB

Large and small projects at Main campus and satellite locations Bruno Christelli 409-772-1939 10+ years

CLARENCE BROZE JR.
5517 Ecret
Rt. 4 Box 955
Dickinson, Texas 77539
Residence: (281) 337-3936

September 13, 2010

RESUME

EDUCATION

B S Degree, Stephen F Austin State University, Nacogdoches, Texas

Four-year Apprentice Program, I B E W Local 527, Galveston, Texas

San Jacinto Jr College, Master Electrical Code Study and Calculations Courses, 16 Hours of College Credit

3 M School of Hi Voltage Terminations and Splicing, Six-week Duration

Okonite - Classes on Lead Cable Splicing, Six-week Duration

Education Courses in Safety Education and First Aid, Stephen F Austin State University and Virginia State Mining Authority

CERTIFICATIONS
Master Electrician License
I.B E W Apprentice Program JIW
H 1-Voltage Splicing

PROFESSIONAL HIGHLIGHTS

CRESCENT ENGINEERING COMPANY INC. / INDUSTRIAL I & E
PRESIDENT

(Previously employed as operations manager of the Crescent companies for eight years, Mr Broze purchased the Crescent in 2002 and formed Industrial I&E at that time) Crescent along with its sister company Industrial I&E, has over 150 employees and provides services to the Galveston County area They are full service companies with lineman, inside wiremen (electricians) and instrumentation technicians The companies perform electrical work on industrial, institutional, commercial, and residential occupancies
Crescent Engineering Co , Inc has been in business in the area since 1958

#11 S SKIMMER (409) 682-1244
La Marque, TX 77568

Grady Mack

Certifications Master Electrician, State of Texas, #221812

Education High School Diploma, La Marque High School 1993
Electrical Apprenticeship 1994-2000, IBEW, LU 527

Employment

2008 - Present Crescent Electric / Industrial I & E
La Marque shop Supervisor Prior to this position as a service technician, I provided a wide range of electrical services to customers, from troubleshooting to installation in either an industrial, commercial, or in a residential environment

2000-2008 Service Tech

1994-2000 Apprentice

1993-1994 Crowder Funeral Home, part time while attending College of the Mainland

Civic Involvement Rotary Club of the Mainland
National Wild Turkey Federation

CONTRACTOR CERTIFICATIONS

U S Department of Housing and Urban Development

CERTIFICATION OF BIDDER REGARDING CIVIL RIGHTS LAWS AND REGULATIONS

INSTRUCTIONS

CERTIFICATION OF BIDDER REGARDING Executive Order 11246 and Federal Laws Requiring Federal Contractor to adopt and abide by equal employment opportunity and affirmative action in their hiring, firing, and promotion practices This includes practices related to race, color, gender, religion, national origin, disability, and veterans' rights

NAME AND ADDRESS OF BIDDER (include ZIP Code)
Crescent Engineering Co Inc dba Crescent Electric
1319 First St. PO Box 36
LaMarque, TX 77568

CERTIFICATION BY BIDDER

Bidder has participated in a previous contract or subcontract subject to Civil Rights Laws and Regulations

☑ Yes ☐ No

The undersigned hereby certifies that

☐ The Provision of Local Training, Employment, and Business Opportunities clause (Section 3 provision) is included in the Contract A written Section 3 plan (Local Opportunity Plan) was prepared and submitted as part of the bid proceedings (if bid equals or exceeds $100,000)

☐ The Non Segregated Facilities clause (Section 109 provision) is included in the Contract No segregated facilities will be maintained as required by Title VI of the Civil Rights Act of 1964

☐ The Equal Employment Opportunity clause is included in the Contract (if bid equals or exceeds $10,000)

☐ The Affirmative Action for Handicapped Workers clause is included in the contract

Have you ever been or are you being considered for sanction due to violation of Executive Order 11246, as amended?

☐ Yes ☑ No

Clarence Broze Jr President
NAME AND TITLE OF SIGNER (Please type)

Clarence Broze Jr
SIGNATURE

DATE
11-22-11

SECTION 504 CERTIFICATION

POLICY OF NONDISCRIMINATION ON THE BASIS OF DISABILITY

The Crescent Electric does not discriminate on the basis of disability in the admission or access to, or treatment or employment in, its federally assisted programs or activities

(Name) Clarence Broze, Jr

(Address) 1319 First St.

LaMarque TX 77568

City State Zip

Telephone Number (409) 935 - 2416 Voice

( ) _____ - _____ TDD

has been designated to coordinate compliance with the nondiscrimination requirements contained in the Department of Housing and Urban Development's (HUD) regulations implementing Section 504 (24 CFR Part 8 dated June 2, 1988).

XVIII

TXCDBG
NONCOLLUSION AFFIDAVIT
OF PRIME BIDDER

NONCOLLUSION AFFIDAVIT OF PRIME BIDDER

State of Texas)

County of Galveston)

Clarence Brice, Jr, being first duly sworn, deposes and says that

(1) He is President of Crescent Electric, the Bidder that has submitted the attached Bid,

(2) He is fully informed respecting the preparation and contents of the attached Bid and of all pertinent circumstances respecting such Bid;

(3) Such Bid is genuine and is not a collusive or sham Bid,

(4) Neither the said Bidder nor any of its officers, partners, owners, agents, representatives, employees or parties in interest, including this affiant, has in any way colluded, conspired, connived or agreed, directly or indirectly with another Bidder, firm or person to submit a collusive or sham Bid in connection with the Contract for which the attached Bid has been submitted or to refrain from bidding in connection with such Contract, or has in any manner, directly or indirectly, sought by agreement or collusion or communication or conference with any other Bidder, firm or person to fix the price or prices in the attached Bid or of any other Bidder, or to fix an overhead, profit or cost element of the Bid price or the Bid price of any other Bidder, or to secure through any collusion, conspiracy, connivance or unlawful agreement any advantage against the County of Galveston (Local Public Agency) or any person interested in the proposed Contract, and

(5) The price or prices quoted in the attached Bid are fair and proper and are not tainted by any collusion, conspiracy, connivance or unlawful agreement on the part of the Bidder or any of its agents, representatives, owners, employees, or parties in interest, including this affiant

(Signed) Clarence Brice Jr

President
Title

Subscribed and sworn to me this 22nd day of November 2011.

By Terri Johnson Cooley
Notary Public

My commission expires 5/23/14

TERRI JOHNSON COOLEY
Notary Public, State of Texas
My Commission Expires
May 23, 2014

XIX

PROJECT SIGN

PROJECT SIGN GENERAL NOTES:

1 Design Requirements
   a Design sign and structure to remain in place and withstand 60 miles-per-hour wind velocity
   b Sign Manufacturer/Maker/Painter Experienced as a professional sign company
   c Finishes, Painting Adequate to withstand weathering, fading and chipping for duration of construction
   d Appearance. Project signs shall present a fresh, new and neat look All project signs shall be new or refurbished so as to look new

2 Sign Materials
   a Structure and Framing Use new 4-inch by 4-inch wood posts to reach 8-feet above existing grade Paint structural members white on all sides and edges to resist weathering Set posts approximately 4-feet apart
   b Sign For sign use 4-foot by 8-foot marine plywood, minimum ¾-inch thick Use full size sheets for sign to minimize joints, do not piece wood to fabricate a sign face. Paint sign material white, two (2) coats, on all sides and edges to resist weathering
   c Paint and Primers White paint used to prime surfaces and to resist weathering shall be an industrial grade, fast drying, oil-based paint with gloss finish Paint all signs surfaces with two (2) coats of this weather-protective paint prior to adding any lettering
   d Sign Border Add 2½-inch wide black border along the four edges of the project sign For border use 3M Scotchcal Engineer Grade, Pressure Sensitive Sheeting (Black) or approved equal
   e Sign Lettering Make lettering and symbols from 3M Scotchcal Pressure Sensitive Films or approved equal, or at Contractor's option, signs may be painted using approved paints Whether film or paint is used, match color to 3M Scotchcal Pressure Sensitive Film, Black
   f Rough Hardware Galvanized steel or brass for fasteners and other hardware

3 Sign Components
   a Sign
      (1) The 4-foot by 8-foot component of the sign has fields of information as indicated
      (2) The Engineer will provide the project title to the Contractor for preparation of the sign
   b Sign Support Structure
      (1) Sign Posts 4-inch by 4-inch sign posts 12-feet long minimum for post hole mounting to set top of posts at 8-feet above existing grade
   c Fasteners
      (1) ½-inch by 5½-inch button heads carriage bolts for posts with nuts and flat head washers Cover button heads with white reflective film or paint to match sign background

PROJECT SIGN GENERAL NOTES:
(continued)

4 Installation
- a Install project identification sign within fourteen (14) calendar days after date of Notice to Proceed
- b Erect at location designated by the Engineer or where shown on the Plans and/or Exhibits In either case, position the sign in such a manner as to be fully visible and readable to the general public
- c Erect sign level and plumb
- d If post hole mounted, sink posts at least 4-feet below grade Stabilize posts to minimize lateral motion.
- e Erect sign so that the top edge of the sign is at a nominal 8-feet above existing grade

5 Maintenance and Removal
- a Maintain signs and supports clean Repair deterioration and damage
- b Remove signs, framing, supports and foundations at completion of project and restore the area

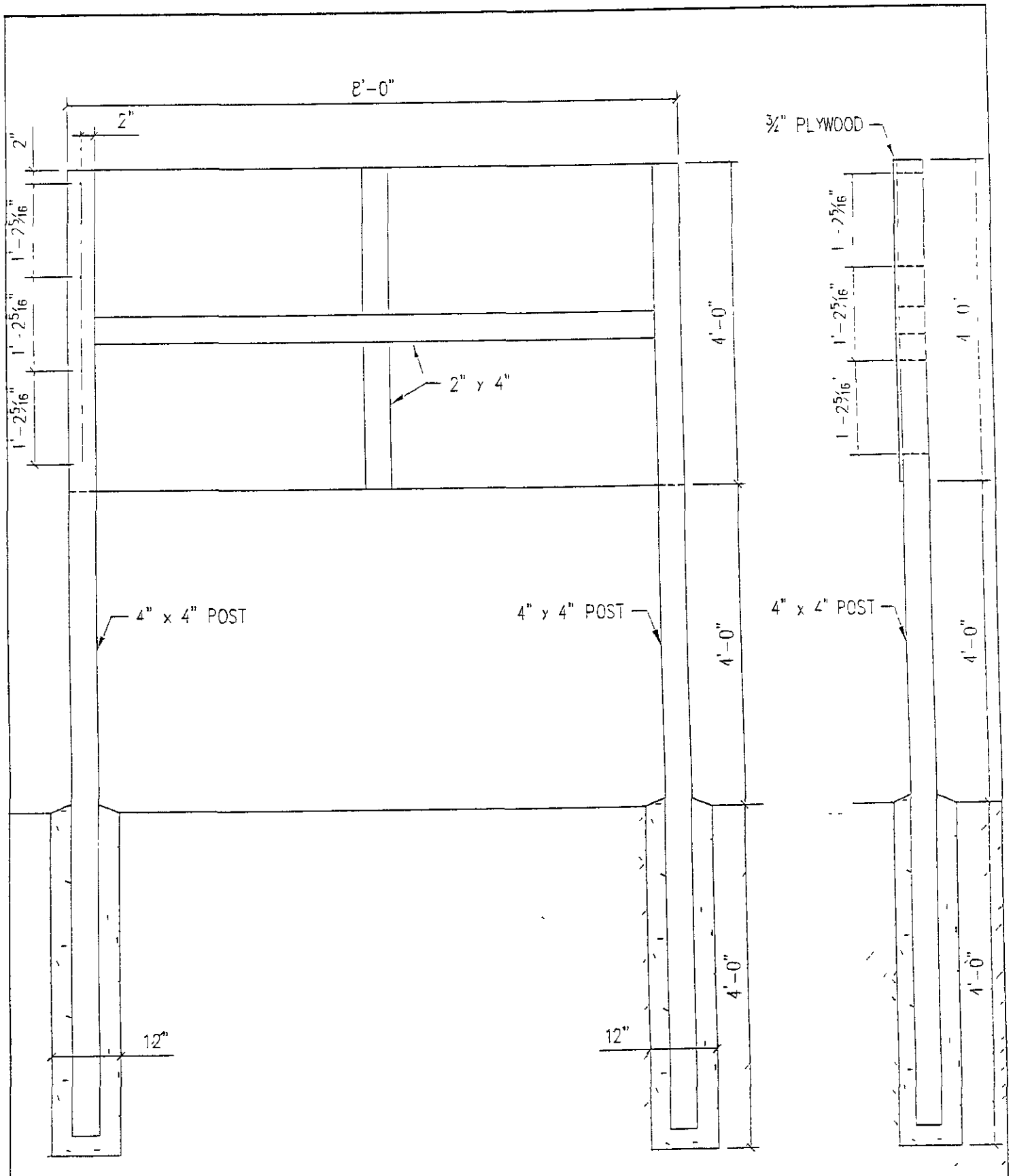

NOTE
SEE NEXT SHEET FOR
SIGN INFORMATION

CONSTRUCTION
OF
"PROJECT NAME"

HURRICANE RECOVERY PROJECT

THIS PROJECT IS FUNDED BY THE GENERAL LAND OFFICE OF THE STATE OF TEXAS, TO PROVIDE FOR DISASTER RECOVERY AND RESTORATION OF INFRASTRUCTURE FOR COMMUNITIES IMPACTED BY THE 2008 HURRICANES. FUNDS ALLOCATED BY THE UNITED STATES DEPARTMENT OF HOUSING AND URBAN DEVELOPMENT THROUGH THE COMMUNITY DEVELOPMENT BLOCK GRANT PROGRAM.
WWW GLO TEXAS GOV

8'-0"

4'-0"

07/19/11

TDRA PROJ. SIGN 2 (8.5X11-1 20)

PROJECT SIGN REQUIREMENTS

Public buildings, facilities, and centers constructed with Texas General Land Office TxCDBG-DRS assistance shall have permanent signage placed in a prominent visible public area with the wording provided below. The formatting of such signage will be at local discretion to best fit the architectural design of the facility constructed but should be legible from at least three (3) feet distance The Texas General Land Office and United States Department of Housing and Urban Development logos should be included on the sign

Other construction projects, e g., water transmission lines, sewer collection lines, drainage, roadways, housing rehabilitation, etc utilizing Texas General Land Office TxCDBG-DRS funding shall have temporary signage erected in a prominent location at the construction project site or along a major thoroughfare within the locality as directed by the owner.

Project Sign Wording:

"This project is funded by the General Land Office of the State of Texas, to provide for disaster recovery and restoration of infrastructure for communities impacted by the 2008 hurricanes Funds allocated by the United States Department of Housing and Urban Development through the Community Development Block Grant Program "

XX

ACKNOWLEDGEMENT AND CERTIFICATION REGAREDING DEBARMENT, SUSPENSION, AND OTHER INELGIBILITY

County of Galveston

ACKNOWLEDGMENT AND CERTIFICATION REGARDING DEBARMENT, SUSPENSION, AND OTHER INELGIBILITY

Executive Orders 12549 & 12689 Certification, Debarment and Suspension

Solicitation Number _____

Solicitation Title _____

Contractor hereby CERTIFIES that:

Contractor, and all of its principals, is not presently debarred, suspended, proposed for debarment, proposed for suspension, or declared ineligible under Executive Order 12549 or Executive Order 12689, Debarment and Suspension, and is not in any other way ineligible for participation in Federal or State assistance programs,

Contractor, and all of its principals, were not and have not been debarred, suspended, proposed for debarment, proposed for suspension, or declared ineligible under Executive Order 12549 or Executive Order 12689, Debarment and Suspension, and were not and have not been in any other way ineligible for participation in Federal or State assistance programs at the time its' proposal was submitted in the procurement identified herein and at any time since submission of its' proposal,

Contractor has included, and shall continue to include, this certification in all contracts between itself and any sub-contractors in connection with services performed under this contract, **and**

Contractor shall notify Galveston County in writing immediately, through written notification to the Galveston County Purchasing Agent, if Contractor is not in compliance with Executive Order 12549 or 12689 during the term of its contract with Galveston County

Contractor **Represents** and **Warrants** that the individual executing this Acknowledgment and Certification on its behalf has the full power and authority to do so and can legally bind the Contractor hereto

Crescent Engineering & Inc dba Crescent Electric 4/4/12

Name of Business Date

By Clarence Broze Jr.

Signature

Clarence Broze Jr. President

Printed Name & Title

CERTIFICATION REGARDING DEBARMENT, SUSPENSION INELIGIBILITY, AND VOLUNTARY EXCLUSION

By submission of its proposal, proposer certifies that it is not ineligible for participation in federal or state assistance program under Executive Order 12549, "Debarment and Suspension " Proposer further agrees to include this certification in all contracts between itself and any subcontractors in connection with services performed under this contract Proposer also certifies that it shall notify Galveston County in writing immediately if contractor is not in compliance with Executive Order 12549 during the term of this contract Proposer agrees that it shall refund Galveston County for any payments made to it while ineligible

XXI
EMPLOYMENT VERIFICATION

EMPLOYMENT VERIFICATION

The immigration Reform and Control Act (IRCA) of 1986 prohibits contractors from knowingly hiring illegal workers. Accordingly, Contractors and Subcontractors must collect information regarding an employee's identity and employment eligibility and document that information on Form I-9. In addition, Contractors and Subcontractors will be required to utilize E-Verify to verify that the information their employees provided was valid or that the documents presented were genuine. Contractors and Subcontractors shall also be required to keep a record on each employee showing compliance with this requirement. The records shall be open at all reasonable hours to inspection by the Galveston County Wage Compliance Officer. Each violation of this requirement shall result in the Contractor and/or Subcontractor paying the County the amount of $60.00 for each employee employed for each calendar day or part of the day that the Contractor or Subcontractor failed to comply with the requirements of this general condition.

XXII

TECHNICAL SPECIFICATIONS

SPECIFICATIONS TABLE OF CONTENTS

SPECIFICATIONS	PAGE NO
DIVISION 1 - GENERAL REQUIREMENTS	
Submittals	01300 - 1-5
Schedule of Values	01370 – 1-1
Testing Laboratory Services	01410 - 1-3
Protection of Environment	01560 - 1-2
Control of Ground Water and Surface Water	01563 - 1-6
Cleaning	01710 - 1-2
Project Record Documents	01720 - 1-2
Operation and Maintenance (O&M) Data	01730 - 1-5
DIVISION 2 - SITE WORK	
Site Preparation	02100 - 1-2
Site Grading	02210 - 1-3
Structural Excavation and Backfilling	02220 - 1-4
Trenching, Bedding and Backfill for Utilities	02227-1-5
Bedding and Backfill Material	02251-1-6
Cement Stabilized Sand	02252-1-2
Chain Link Fences and Gates	02831-1-4
Topsoil	02920-1-1
Hydromulch Seeding	02921-1-3
DIVISION 3 - CONCRETE	
Concrete Reinforcement	03200 - 1-4
Cast-In-Place Concrete	03300A - 1-9
DIVISION 4 - MASONRY	
Not Used	
DIVISION 5 - METALS	
Not Used	
DIVISION 6 - WOOD AND PLASTICS	
Not Used	
DIVISION 7 - THERMAL AND MOISTURE PROTECTION	
Not Used	
DIVISION 8 - DOORS, WINDOWS AND GLASS	
Not Used	
DIVISION 9 - FINISHES	

Not Used

DIVISION 10 - SPECIALTIES

Not Used

DIVISION 11 - EQUIPMENT

Not Used

DIVISION 12 - FURNISHINGS

Not Used

DIVISION 13 - SPECIAL CONSTRUCTION

Not Used

DIVISION 14 - CONVEYING SYSTEMS

Not Used

DIVISION 15 - MECHANICAL

Not Used

DIVISION 16 – ELECTRICAL

General Electrical Provisions	16010-1-4
Electrical Basic Materials and Methods	16020-1-15
Automatic Transfer Switch	16046-1-9
Electrical Identification	16195-1-9
Standby Diesel Engine Generator	16210-1-16
Grounding	16452-1-8

SECTION 01300
SUBMITTALS

PART 1 GENERAL

1 01 SUMMARY

A Section Includes

1 Procedural requirements for Work-related submittals including Construction Progress Schedules, Shop Drawings, product data, samples, operation and maintenance (O&M) data, construction photographs, schedule of values and other miscellaneous Work-related submittals

1 02 CONSTRUCTION PROGRESS SCHEDULES

A Prepare and submit Construction Progress Schedule in accordance with General Conditions

B No Work shall be done between 6 00 p m and 7 00 a m , nor on Saturdays, Sundays or legal holidays without written permission of OWNER Emergency work may be done without prior permission

C Night work may be established by CONTRACTOR as regular procedure with written permission of OWNER. Such permission may be revoked at any time by OWNER

1 03 SHOP DRAWINGS AND PRODUCT DATA

A Scheduling

1 Prepare and transmit each submittal sufficiently in advance of scheduled performance of Work and other applicable activities

B CONTRACTOR'S Responsibilities

1 Review Shop Drawings and product data prior to submittal
2 Determine and verify following

a Field measurements
b Field construction criteria
c Catalog numbers and similar data
d Conformance with Specifications

3 Coordinate each submittal with requirements of Work and Contract Documents
4 Notify ENGINEER in writing, at time of submittal, of deviations in submittals from requirements of Contract Documents
5 Begin no fabrication or Work requiring submittals until return of submittals with ENGINEER approval
6 Submittals received but not requested in Specifications may be returned without review

C Submittals shall contain

1 Date of submittal and dates of previous submittals
2 Project title and number

3 Contract identification
4 Names of

a CONTRACTOR
b Supplier
c Manufacturer

5 All shop drawings shall be submitted with one of the following notes on it Shop drawings submitted with deviations must also include a detail description of all deviations The Engineer at his option may approve, reject or require contractor to re-submit deviations that are signed and sealed by a licensed professional Engineer If deviations are rejected then contractor will re-submit with no deviation from plans and contract documents

a No deviations from plans and contract documents
b With deviations from plans and contract documents

6 Identification of product, with identification numbers, and Drawing and Specification section numbers
7 Field dimensions, clearly identified
8 Identify details required on Drawings and in Specifications
9 Show manufacturer and model number, give dimensions, and provide clearances
10 Relation to adjacent or critical features of Work or materials
11 Applicable standards, such as ASTM or Federal Specification numbers Identification of deviations from Contract Documents
12 Identification of revisions on resubmittals
13 8-in by 3-in blank space for CONTRACTOR and ENGINEER stamps
14 CONTRACTOR'S stamp, signed, certifying to review of submittal, verification of products, field measurement, field construction criteria, and coordination of information within submittal with requirements of Work and Contract Documents

D Resubmittal Requirements.

1 Comply with submittal requirements
2 Make corrections or changes in submittals required by ENGINEER Resubmittals required until approved
3 Identify on transmittal form submittal is resubmission
4 Shop Drawings and Product Data

a Revise initial drawings or data and resubmit as specified for initial submittal
b Indicate changes made other than those requested by ENGINEER

E Contractor shall be responsible for the distribution of reproductions of Shop Drawings and copies of product data which carry ENGINEER'S stamp

F ENGINEER'S Duties

1 Review submittals in accordance with schedule
2 Affix stamp and signature, and indicate requirements for resubmittal or approval of submittal
3 Return submittals to CONTRACTOR for distribution or for resubmittal

1 04 TEST RESULTS AND CERTIFICATIONS

A Submit test results and certifications required in Specification sections

B Submit test results upon completion of test or submittal of results from testing laboratory

C Test results and certifications are submitted for review of conformance with specified requirements and information

1 05 GUARANTEE, WARRANTIES, MAINTENANCE AGREEMENTS, AND WORKMANSHIP BONDS

A Refer to Specification sections for requirements Submittal considered final when submittal is returned by ENGINEER, marked "Approved" or "Approved as Noted "

B In addition to copies desired for CONTRACTOR'S use, furnish 2 executed copies Provide 2 additional copies where required for maintenance data

1 06 OPERATION AND MAINTENANCE (O&M) DATA

A Compile product data and related information appropriate for OWNER'S maintenance and operation of products furnished under Contract Prepare O&M data as specified in this section

B Manual Format Prepare data in form of instructional manual for use by OWNER'S personnel

1 Size· 8-1/2 in by 11 in or 11 in by 17 in folded, with standard 3-hole punching
2 Text Manufacturer's printed data, or neatly typewritten
3 Drawings

a Provide reinforced punched binder tab, bind in with text
b Fold larger drawings to size of text pages and place in envelopes which are to be bound into manual Place suitable identification on outside of each envelope

4 Cover Identify each submittal with typed or printed title "OPERATING AND MAINTENANCE INSTRUCTIONS "

a List

1) Title of Project
2) Identity of Contractor.
3) Identity of general subject matter covered in manual
4) Identity of section number as set forth in Contract Documents
5) Data of installation

5 Binders

a Commercial quality binders with durable and cleanable plastic covers

C Product Data

1 Include only those sheets pertinent to specific product
2 Annotate each sheet to

a Identify specific product or part installed
b Identify data applicable to installation
c Delete references to inapplicable information

3 Provide table of contents

1 07 ACTION ON SUBMITTALS

A ENGINEER'S Action

1 General

a Where action and return on submittals required or requested, ENGINEER will review each submittal, mark with appropriate action, and return Where submittal must be held for coordination, ENGINEER will so advise CONTRACTOR without delay
b ENGINEER will stamp each submittal with action stamp, appropriately marked with submittal action

2 Notification of Insufficient Information

a If information submitted is not sufficient to complete review of submittal, ENGINEER will send transmittal to CONTRACTOR notifying CONTRACTOR that additional information is required
b Submittal will not be returned Submittal will be placed in an "on hold" status until CONTRACTOR provides additional information

B Action Stamp

1 Marking Approved

a Final Unrestricted Release Where submittals are marked as "Approved," Work covered by submittal may proceed provided it complies with the Construction Plans and Contract Documents Acceptance of Work depends on that compliance

2 Marking Approved As Noted

a Final-But-Restricted Release When submittals are marked as "Approved With Noted Exceptions," Work covered by submittal may proceed provided it complies with ENGINEER'S notations or corrections on submittal and with the Construction Plans and Contract Documents Acceptance of Work depends on that compliance. Resubmittal not required

3 Marking Not Approved

a Submittal Not Accepted When submittals are marked as "Not Approved," do not proceed with Work covered by submittal Work covered by submittal does not comply with Contract Documents
b Prepare new submittal for different material or equipment supplier or different product line or material of same supplier complying with Contract Documents

4 Marking Revise and Resubmit

a Returned for Resubmittal When submittals are marked as "Revise and Resubmit," do not proceed with Work covered by submittal Do not permit Work covered by submittals to be used at Project site or elsewhere where Work is in progress

b Revise submittal or prepare new submittal in accordance with ENGINEER'S notations Resubmit without delay Repeat if required to obtain different action marking

PART 2 PRODUCTS

(Not Used)

PART 3 EXECUTION

3 01 SUBMITTAL REQUIREMENTS

A Provide complete copies of required submittals as follows

1 Construction Progress Schedule

a 2 copies of initial schedule
b 2 copies of each revision

2 Shop Drawings and Product Data 6 copies
3 Test Results 3 copies
4 Other Required Submittals

a 6 copies if required for review
b 3 copies if required for record

B Deliver required copies of submittals to ENGINEER at ***LJA*** Engineering & Surveying, Inc , 2929 Briarpark Drive, Suite 600, Houston, Texas 77042

END OF SECTION

SECTION 01370
SCHEDULE OF VALUES

PART 1 GENERAL

1 01 SUMMARY

A Submit to ENGINEER, Schedule of Values allocated to various portions of Work as required by General Conditions

B Upon request of ENGINEER, support values with data substantiating their correctness

1 02 FORM AND CONTENT OF SCHEDULE OF VALUES

A. Type schedule on 8-1/2-in by 11-in white paper, CONTRACTOR'S standard forms and automated printout will be considered for approval by ENGINEER upon CONTRACTOR'S request Identify schedule with following

1 Project title and location
2 ENGINEER and ENGINEER'S Project number
3 Name and address of CONTRACTOR
4 Contract designation
5 Date of submission

B Schedule shall list installed value of component parts of Work in sufficient detail to serve as basis for computing values for progress payments during construction

C Follow table of contents of this Project Manual as format for listing component items

1 Identify each line item with number and title of respective Specification section

D For each Specification division, list subvalues of major materials, equipment or operations under division

E Provide separate listing of items of General Requirements (Division 1), such as bonds, insurance premiums, job mobilization, field supervision and layout, construction facilities and temporary controls, contingency allowance, construction schedule, O&M data, record drawings, and submittals

END OF SECTION

SECTION 01410
TESTING LABORATORY SERVICES

PART 1 GENERAL

1 01 PERFORMANCE REQUIREMENTS

A OWNER will employ for services of independent testing laboratory to perform testing for work specified in following sections

1 Section 02220 - Structural Excavation and Backfilling
2 Section 02221 - Trenching, Backfilling, and Compacting
3 Section 02252 – Cement Stabilized Sand
4 Section 02520 – Portland Cement Concrete Paving
5. Section 03300A - Cast-in-Place Concrete

B CONTRACTOR shall employ services of independent testing laboratory approved by OWNER to perform other testing as described in Specification

C CONTRACTOR shall cooperate with laboratory provided by OWNER facilitate execution of laboratories required services

D Employment of laboratory shall, in no way, relieve CONTRACTOR of obligations to perform work

E Related Requirements in Other Parts of Contract Documents

1 The Contractor shall be responsible for any other inspections and testing required by laws, ordinances, rules, regulations, orders or approvals of public authorities, not specified herein

1 02 QUALIFICATION OF LABORATORY

A Meet basic requirements of ASTM E329

B Authorized to operate in state in which Project is located

C Testing Equipment

1 Calibrated at reasonable intervals by devices of accuracy traceable to either

a National Bureau of Standards.
b Accepted values of natural physical constants

1 03 LABORATORY DUTIES

A Cooperate with ENGINEER and CONTRACTOR, provide qualified personnel to perform Work after due Notice to Proceed

B Perform specified inspections, secure samples, and test materials

1 Comply with specified standards
2 Ascertain compliance of materials with Contract Documents

C Promptly notify ENGINEER of observed irregularities or deficiencies of Work, equipment or material

D Promptly submit written report of each test and inspection, one copy each to ENGINEER, OWNER, material supplier, and CONTRACTOR, and one copy to record document file Each report shall include following

1 Date issued
2 Project title and number
3 Testing laboratory name, address, and telephone number
4 Name and signature of laboratory inspector
5 Date and time of sampling or inspection
6 Record of temperature and weather conditions if test performed in field
7 Date of test
8 Identification of product and Specification section
9 Location of sample or test in Project
10 Type of inspection or test
11 Results of tests and compliance with Contract Documents
12 Interpretation of test results, when requested by ENGINEER

E Perform additional tests as required by ENGINEER

1 04 LIMITATIONS OF AUTHORITY OF TESTING LABORATORY

A Laboratory is not authorized to

1 Release, revoke, alter or enlarge on requirements of Contract Documents
2 Approve or accept any portion of Work
3 Perform duties of CONTRACTOR

1 05 CONTRACTOR'S RESPONSIBILITIES

A Cooperate with laboratory personnel and provide access to Work

B Provide to laboratory preliminary design mix proposed to be used for concrete and other material mixes which require control by testing laboratory

C Furnish copies of product test reports

D Furnish incidental labor and facilities

1 Provide access to Work to be tested
2 Obtain and handle samples at Project site or at source of product to be tested
3 Facilitate inspections and tests
4 Store and cure test samples

E Notify laboratory and ENGINEER sufficiently in advance of operations to allow for laboratory assignment of personnel and scheduling of tests

1 When tests or inspections cannot be performed after such notice, reimburse OWNER for laboratory personnel and travel expenses incurred due to CONTRACTOR'S negligence

F Make arrangements with laboratory and pay for additional samples and tests required for CONTRACTOR'S convenience

G Employ and pay for services of testing laboratory to perform additional inspections, sampling, and testing required when initial tests indicate Work does not comply with Contract Documents

END OF SECTION

SECTION 01560
PROTECTION OF ENVIRONMENT

PART 1 GENERAL

1 01 SUMMARY

A CONTRACTOR, in executing Work, shall maintain Work areas on- and off-site free from environmental pollution that would be in violation of federal, state or local regulations

1 02 PROTECTION OF STORM SEWERS

A Prevent construction material, pavement, concrete, earth or other debris from entering existing storm sewer or sewer structure

1 03 PROTECTION OF WATERWAYS

A Observe rules and regulations of State of Texas and agencies of U S government prohibiting pollution of lakes, streams, rivers or wetlands by dumping of refuse, rubbish, dredge material or debris

1 Any permits required shall be obtained by CONTRACTOR at CONTRACTOR'S cost

B Provide holding ponds or approved method which will divert flows, including storm flows and flows created by construction activity, to prevent excessive silting of waterways or flooding damage to property

C Comply with procedures outlined in U S EPA manuals entitled, "Guidelines for Erosion and Sedimentation Control Planning and Implementation," Manual EPA-72-015 and "Processes, Procedures, and Methods to Control Pollution Resulting from All Construction Activity," Manual EPA 43019-73-007

1 04 PROTECTION OF AIR QUALITY

A Minimize air pollution by requiring use of properly operating combustion emission control devices on construction vehicles and equipment and encourage shutdown of motorized equipment not in use.

B Do not burn trash on construction site

C If temporary heating devices are necessary for protection of Work, they shall not cause air pollution

1 05 USE OF CHEMICALS

A Chemicals used during project construction or furnished for project operation, whether herbicide, pesticide, disinfectant, polymer, reactant or of other classification, shall be approved by U S EPA or U S Department of Agriculture or any other applicable regulatory agency

B Use and disposal of chemicals and residues shall comply with manufacturer's instructions

1 06 NOISE CONTROL

A Conduct operations to cause least annoyance to residents in vicinity of Work, and comply with applicable local ordinances

B Equip compressors, hoists, and other apparatus with mechanical devices necessary to minimize noise and dust Equip compressors with silencers on intake lines

C Equip gasoline or oil-operated equipment with silencers or mufflers on intake and exhaust lines

D Line storage bins and hoppers with material that will deaden sounds

E Route vehicles carrying rock, concrete or other material over such streets as will cause least annoyance to public and do not operate on public streets between hours of 6 00 p m and 7 00 a m , or on Saturdays, Sundays or legal holidays unless approved by ENGINEER

1 07 DUST CONTROL

A Due to close geographic location of Project to other off-site facilities take special care in providing and maintaining temporary site roadways, OWNER'S existing roads, and public roads used during construction operations in clean, dust free condition

B Comply with local environmental regulations for dust control If CONTRACTOR'S dust control measures are considered inadequate by ENGINEER, ENGINEER may require CONTRACTOR to take additional dust control measures

PART 2 PRODUCTS

(Not Used)

PART 3 EXECUTION

(Not Used)

END OF SECTION

SECTION 01563
CONTROL OF GROUND WATER AND SURFACE WATER

PART 1 GENERAL

1 01 SECTION INCLUDES

A Dewatering, depressurizing, draining, and maintaining trench and shaft excavations and foundation beds in dry and stable condition, and controlling ground water conditions for tunnel excavations

B Protecting work against surface runoff and rising flood waters

C Disposing of removed water

1 02 MEASUREMENT AND PAYMENT

A Measurement and payment for these items shall be as stipulated in the Bid Proposal If not stipulated in Bid Proposal these items shall be considered incidental to the bid with no separate payment

1 03 REFERENCES

A ASTM D698 - Test Methods for Moisture-Density Relations of Soils and Soil-Aggregate Mixtures, Using 5 5-lb (2 49 kg) Rammer and 12-inch (304 8 mm) Drop

B Federal Regulations, 29 CFR Part 1926, Standards-Excavation, Occupational Safety and Health Administration (OSHA)

C Federal Register 40 CFR (Vol 55, No 222) Part 122, EPA Administered Permit Programs (NPDES), Para 122 26(b)(14) Storm Water Discharge

1 04 DEFINITIONS

A Ground water control includes both dewatering and depressurization of water-bearing soil layers

1 Dewatering includes lowering the water table and intercepting seepage which would otherwise emerge from slopes or bottoms of excavations, or into tunnels and shafts, and disposing of removed water The intent of dewatering is to increase stability of tunnel excavations and excavated slopes, prevent dislocation of material from slopes or bottoms of excavations, reduce lateral loads on sheeting and bracing, improve excavating and hauling characteristics of excavated material, prevent failure or heaving of the bottom of excavations, and to provide suitable conditions for placement of backfill materials and construction of structures and other installations

2 Depressurization includes reduction in piezometric pressure within strata not controlled by dewatering alone, as required to prevent failure or heaving of excavation bottom or instability of tunnel excavations

B Excavation drainage includes keeping excavations free of surface and seepage water and may be achieved by placement of drainage layer and sump pumping

C Surface drainage includes use of temporary drainage ditches and dikes and installation of temporary culverts and sump pumps with discharge lines as required to protect the Work from any source of surface water

D Equipment and instrumentation for monitoring and control of the ground water control system includes piezometers and monitoring wells, and devices, such as flow meters, for observing and recording flow rates

1.05 PERFORMANCE REQUIREMENTS

A Conduct subsurface investigations to identify groundwater conditions and to provide parameters for design, installation, and operation of groundwater control systems

B Design a ground water control system, compatible with requirements of Federal Regulations 29 CFR Part 1926 and Section 01526 - Trench Safety Systems, to produce the following results

1 Effectively reduce the hydrostatic pressure affecting

a Excavations
b Tunnel excavation, face stability or seepage into tunnels

2 Develop a substantially dry and stable subgrade for subsequent construction operations
3 Preclude damage to adjacent properties, buildings, structures, utilities, installed facilities, and other work
4 Prevent the loss of fines, seepage, boils, quick condition, or softening of the foundation strata
5 Maintain stability of sides and bottom of excavations

C Provide ground water control systems which may include single-stage or multiple-stage well point systems, eductor and ejector-type systems, deep wells, or combinations of these equipment types

D Provide drainage of seepage water and surface water, as well as water from any other source entering the excavation Excavation drainage may include placement of drainage materials, such as crushed stone and filter fabric, together with sump pumping

E Provide ditches, berms, pumps and other methods necessary to divert and drain surface water from excavation and other work areas

F Locate ground water control and drainage systems so as not to interfere with utilities, construction operations, adjacent properties, or adjacent water wells.

G Assume sole responsibility for ground water control systems and for any loss or damage resulting from partial or complete failure of protective measures and any settlement or resultant damage caused by the ground water control operations Modify ground water control systems or operations if they cause or threaten to cause damage to new construction, existing site improvements, adjacent property, or adjacent water wells, or affect potentially contaminated areas Repair damage caused by ground water control systems or resulting from failure of the system to protect property as required

H Provide an adequate number of piezometers installed at the proper locations and depths as required to provide meaningful observations of the conditions affecting the excavation, adjacent structures, and water wells

I Provide environmental monitoring wells installed at the proper locations and depths as required to provide adequate observations of hydrostatic conditions and possible contaminant transport from contamination sources into the work area or into the ground water control system

J Decommission piezometers and monitoring wells installed during design phase studies and left for CONTRACTOR'S monitoring and use

1 06 SUBMITTALS

A Submittals shall conform to requirements of Section 01300 - Submittals

B Submit the following records upon completed installation

1 Installation and development reports for well points, eductors, and deep wells
2 Installation reports and baseline readings for piezometers and monitoring wells
3 Baseline analytical test data of water from monitoring wells
4 Initial flow rates

C Submit the following records on a weekly basis during operations

1 Records of flow rates and piezometric elevations obtained during monitoring of dewatering and depressurization Refer to Paragraph 3 02, Requirements for Eductor, Well Points, or Deep Wells
2 Maintenance records for ground water control installations, piezometers, and monitoring wells

D Submit the following records at end of work Decommissioning (abandonment) reports for monitoring wells and piezometers installed by other during the design phase and left for CONTRACTOR's monitoring and use.

1 07 ENVIRONMENTAL REQUIREMENTS

A Comply with requirements of agencies having jurisdiction

B Comply with Texas Commission on Environmental Quality regulations and Texas Water Well Drillers Association for development, drilling, and abandonment of wells used in dewatering system

C Obtain permit from EPA under the National Pollutant Discharge Elimination System (NPDES), for storm water discharge from construction sites

D Obtain all necessary permits from agencies with control over the use of groundwater and matters affecting well installation, water discharge, and use of existing storm drains and natural water sources Because the review and permitting process may be lengthy, take early action to pursue and submit for the required approvals

E Monitor ground water discharge for contamination while performing pumping in the vicinity of potentially contaminated sites

PART 2 PRODUCTS

2 01 EQUIPMENT AND MATERIALS

A Equipment and materials are at the option of CONTRACTOR as necessary to achieve desired results for dewatering

B Eductors, well points, or deep wells, where used, must be furnished, installed and operated by an experienced CONTRACTOR regularly engaged in ground water control system design, installation, and operation

C All equipment must be in good repair and operating order

D Sufficient standby equipment and materials shall be kept available to ensure continuous operation, where required

PART 3 EXECUTION

3 01 GROUND WATER CONTROL

A Perform a subsurface investigation by borings as necessary to identify water bearing layers, piezometric pressures, and soil parameters for design and installation of ground water control systems Perform pump tests, if necessary to determine the drawdown characteristics of the waterbearing layers

B Provide labor, material, equipment, techniques and methods to lower, control and handle ground water in a manner compatible with construction methods and site conditions Monitor effectiveness of the installed system and its effect on adjacent property

C Install, operate, and maintain ground water control systems

D Provide for continuous system operation, including nights, weekends, and holidays Arrange for appropriate backup if electrical power is primary energy source for dewatering system

E Monitor operations to verify that the system lowers ground water piezometric levels at a rate required to maintain a dry excavation resulting in a stable subgrade for prosecution of subsequent operations

F Where hydrostatic pressures in confined water bearing layers exist below excavation, depressurize those zones to eliminate risk of uplift or other instability of excavation or installed works

G Maintain water level below subgrade elevation, or to elevations indicated on Drawings, unless a higher level is authorized by ENGINEER Do not allow levels to rise until foundation concrete has achieved its design strength

H During backfilling, dewatering may be reduced to maintain water level a minimum of 5 feet below prevailing level of backfill However, do not allow that water level to result in uplift pressures in excess of 80 percent of downward pressure produced by weight of structure or backfill in place Do not allow water levels to rise into cement stabilized sand until at least 48 hour after placement

I Provide a uniform diameter for each pipe drain run constructed for dewatering Remove pipe drain when it has served its purpose If removal of pipe is impractical, provide grout connections at 50-foot intervals and fill pipe with cement-bentonite grout or cement-sand grout when pipe is removed from service.

J Extent of construction ground water control for structures with a permanent perforated underground drainage system may be reduced, such as for units designed to withstand hydrostatic uplift pressure Provide a means of draining the affected portion of underground system, including standby equipment Maintain drainage system during operations and remove it when no longer required.

K Remove system upon completion of construction or when dewatering and control of surface or ground water is no longer required

L Replace any excavation performed for convenience of dewatering in foundation beds with materials as impermeable as original foundation material Compact backfill to not less than 95 percent of the maximum dry density in accordance with ASTM D698, or as indicated on Drawings

3 02 REQUIREMENTS FOR EDUCTOR, WELL POINTS, OR DEEP WELLS

A Submit a certification that the ground water control system including eductors, well points, or deep well is in compliance with the criteria of Governing Agencies

B For aboveground piping in ground water control system, include a 12-inch minimum length of clear, transparent piping between every eductor well or well point and discharge header so that discharge from each installation can be visually monitored

C Install sufficient piezometers or monitoring wells to show that all trench or shaft excavations in water bearing materials are predrained prior to excavation Provide separate piezometers for monitoring of dewatering and for monitoring of depressurization Install piezometers and monitoring wells for tunneling as appropriate for CONTRACTOR's selected method of work

D Install piezometers or monitoring wells not less than one week in advance of beginning the associated excavation

E Dewatering may be omitted for portions of underdrains or other excavations, but only where auger borings and piezometers or monitoring wells show that soil is predrained by an existing system such that the criteria of the ground water control plan are satisfied

F Replace installations that produce noticeable amounts of sediments after development

G Provide additional ground water control installations, or change the methods, in the event that the installations according to the ground water control plan does not provide satisfactory results based on the performance criteria defined by the plan and by the specification

3 03 EXCAVATION DRAINAGE

A CONTRACTOR may use excavation drainage methods if necessary to achieve well drained conditions The excavation drainage may consist of a layer of crushed stone and filter fabric,

and sump pumping in combination with sufficient wells for ground water control to maintain stable excavation and backfill conditions

3 04 MAINTENANCE AND OBSERVATION

A Conduct daily maintenance and observation of piezometers or monitoring wells while the ground water control installations or excavation drainage are operating in an area or seepage into tunnel is occurring Keep system in good condition

B Replace damaged and destroyed piezometers or monitoring wells with new piezometers or wells as necessary to meet observation schedule

C Cut off piezometers or monitoring wells in excavation areas where piping is exposed, only as necessary to perform observation as excavation proceeds Continue to maintain and make observations, as specified

D Remove and grout piezometers inside or outside the excavation area when ground water control operations are complete Remove and grout monitoring wells when directed by the ENGINEER

3 05 MONITORING AND RECORDING

A Monitor and record average flow rate of operation for each deep well, or for each wellpoint or eductor header used in dewatering system Also monitor and record water level and ground water recovery These records shall be obtained daily until steady conditions are achieved and twice weekly thereafter

B Observe and record elevation of water level daily as long as ground water control system is in operation, and weekly thereafter until the Work is completed or piezometers or wells are removed, except when ENGINEER determines that more frequent monitoring and recording are required Comply with ENGINEER's direction for increased monitoring and recording and take measures as necessary to ensure effective dewatering for intended purpose

3 06 SURFACE WATER CONTROL

A Intercept surface water and divert it away from excavations through use of dikes, ditches, curb walls, pipes, sumps or other approved means The requirement includes temporary works required to protect adjoining properties from surface drainage caused by construction operations

B Divert surface water and seepage water into sumps and pump it into drainage channels or storm drains, when approved by agencies having jurisdiction Provide settling basins when required by such agencies

END OF SECTION

SECTION 01710
CLEANING

PART 1 GENERAL

1 01 SUMMARY

A Execute cleaning during progress of Work and at completion of Work

B Cleaning for Specific Products or Work Specification section for that Work

1 02 DISPOSAL REQUIREMENTS

A Conduct cleaning and disposal operations to comply with codes, ordinances, regulations, and anti-pollution laws

PART 2 PRODUCTS

2 01 MATERIALS

A Use only those cleaning materials which will not create hazards to property and persons or damage surfaces of material to be cleaned

PART 3 EXECUTION

3 01 DURING CONSTRUCTION

A Comply with General Conditions

3 02 FINAL CLEANING

A Remove grease, mastic, adhesives, dust, dirt, stains, fingerprints, labels, and other foreign materials from sight exposed interior and exterior surfaces

B Wash and shine glazing and mirrors

C Polish glossy surfaces to clear shine

D Ventilating Systems

1 Clean permanent filters and replace disposable filters if units were operated during construction
2 Clean ducts, blowers, and coils if units were operated without filters during construction

E Electrical Systems

1 Leave electrical equipment rooms broom clean
2 Clean interior of panel cabinets, pull boxes, and other equipment enclosures
3 Clean lighting fixtures, lamps, and other electrical equipment soiled during installation

4 Touch-up paint or repaint damaged finishes on electrical items delivered to Project with finish coat of paint ENGINEER will make final determination of items to be repainted or touched-up

F Vacuum carpeted areas and broom clean interior floors and exterior paved surfaces, rake clean other surfaces of grounds

G Clean out existing or new sewers to remove sediment and other materials that have entered during construction

H Clean haul roads and streets used as haul roads during construction of accumulated material Clean paved streets with water

I Prior to final completion or OWNER occupancy, CONTRACTOR and OWNER, shall conduct inspection of sight-exposed interior and exterior surfaces and work areas to verify Work and site is clean

END OF SECTION

SECTION 01720
PROJECT RECORD DOCUMENTS

PART 1 GENERAL

1 01 SUMMARY

A Maintain at site one record copy of

1 Drawings
2 Project Manual
3 Addenda
4 Change orders and other modifications to Contract
5 ENGINEER field orders, written instructions or clarifications
6 Approved submittals
7 Field test records
8 Construction photographs
9 Associated permits

1 02 SUBMITTALS

A At Substantial Completion

1 Deliver one marked up set of Drawings to ENGINEER for use in preparation of record drawings

B Accompany submittals with transmittal letter in duplicate, containing following

1 Date
2 Project title and number
3 CONTRACTOR'S name and address
4 Title of record document
5 Signature of CONTRACTOR or authorized representative

PART 2 PRODUCTS

(NOT USED)

PART 3 EXECUTION

3 01 MAINTENANCE OF DOCUMENTS AND SAMPLES

A Store documents and samples in CONTRACTOR'S field office apart from documents used for construction

1 Provide files and racks for storage of documents
2 Provide secure storage space for storage of samples

B Maintain documents in clean, dry, legible condition and in good order Do not use record documents for construction purposes

C Make documents and samples available at all times for inspection by ENGINEER or OWNER

D Failure to properly maintain record documents may be reason to delay a portion of progress payments until records comply with Contract Documents

3 02 RECORD DOCUMENTS

A Label each document "PROJECT RECORD" in neat, large printed letters

B Maintain record set of Drawings and Specifications legibly annotated to show all changes are made during construction

1 Graphically depict changes by modifying or adding to plans, details, sections, elevations, or schedules
2 Make changes on each sheet affected by changes

C Record information concurrently with construction progress.

1 Do not conceal Work until required information is recorded
2 Record changes made by Written Amendment, Field Order, Change Order or Work Directive Change

D Drawings

1 General

a Depths of various elements of foundation in relation to finish first floor datum
b Horizontal and vertical locations of underground utilities and appurtenances, referenced to permanent surface improvements
c Location of internal utilities and appurtenances concealed in construction, referenced to visible and accessible features of structure
d Field changes
e Details not on original Drawings
f Location and identification of exposed interior piping, including those shown schematically on Drawings
g Size of equipment and location including connections

2 Electrical and Instrumentation

a Horizontal and vertical locations and size of underground cable, conduit, and duct runs dimensioned from established building lines
b Plan location and size of interior concealed and exposed feeders
c Size and location of access panels
d Departures from original Drawings and electrical work revisions

END OF SECTION

SECTION 01730
OPERATION AND MAINTENANCE (O&M) DATA

PART 1 GENERAL

1 01 SUMMARY

A Compile equipment and product data and related information appropriate for OWNER'S operation and maintenance (O&M) for each item of equipment or product as specified in other sections of Specifications

1 02 QUALITY ASSURANCE

A Preparation of data shall be performed by personnel·

1 Trained and experienced in O&M of described products
2 Familiar with requirements of this section
3 Skilled as technical writer to extent required to communicate essential data
4 Skilled as drafter competent to prepare required drawings

1 03 FORM OF SUBMITTALS

A Prepare data in form for use by OWNER'S personnel.

B Include like equipment in one volume with heavy duty dividers, separating equipment

C Operation and Maintenance Manuals or Bulletins shall include necessary data for reordering replacement parts, lubrication schedules, and procedures for required maintenance

D Format Subject to approval by ENGINEER

1 Size 8-1/2 in by 11 in , or 11 in by 17 in folded, with standard 3-hole punching
2 Paper 20-lb minimum, white, for typed pages
3 Text Manufacturer's printed data, or neatly typewritten
4 Drawings

a Bind in with text
b Fold larger drawings and place in text page size envelopes bound into binder Place identification on outside of each envelope

5 Volume Cover Label Label each volume cover with typed or printed title "OPERATION AND MAINTENANCE INSTRUCTIONS" and following

a Owner name
b Project title.
c Year of construction
d Volume number and number of total volumes
e Identification of major equipment

6 Provide major equipment in separate sections

a Provide title of section on each divider
b Name(s) of applicable building(s) or structure(s) as shown on Drawings in which equipment located

c Name of equipment as set forth in Contract Documents
d Specification section number for equipment as set forth in Contract Documents
e Provide tab index in Table of Contents

7 Provide tabbed section dividers between each major equipment section

a Provide title of section on each divider
b Provide tab index in Table of Contents

8 Binders

a Bind in volumes three inches thick into commercial quality binder with durable and cleanable plastic covers Paperboard, laminated paperboard, and canvas covers not acceptable
b Are to be filled not more than 75% of capacity
c When multiple binders used, contents shall be organized into related groupings and each binder cover shall bear identification of specific content
d Catalog and Index of Volume

1 04 GENERAL CONTENTS OF DATA

A Each binder major section shall contain equipment data pertaining to not more than one Specification section number indicated in Contract Documents

B Binder Title Sheet

1 Title "OPERATION AND MAINTENANCE INSTRUCTIONS "
2 Individual volume number and number of total volumes
3 Title of Project as it appears on construction plans
4 CONTRACTOR'S name, address, and telephone number

C Product List Immediately after title sheet containing following

1 List of each major components, indexed to content of section, and identified by product name and model number as set forth by manufacturer and specification section and article number

D Major Equipment Title Sheet· First page in data listing following

1 Name(s) of applicable building(s) or structure(s) as shown on Drawings in which equipment located
2 Name of equipment as set forth in Contract Documents
3 Specification section number for equipment as indicated in Contract Documents
4 Subcontractor's name, address, and telephone number if equipment provided by Subcontractor
5 CONTRACTOR'S or Subcontractor's purchase order number, manufacturer's shop order number or other such numbers required for parts and service ordering
6 Manufacturer's name, address, and telephone number
7 Name, address, and telephone number for local source of supply for parts and service

E Table of Contents Immediately following product list Arrange in logical, systematic order and shall be at minimum a tab index Provide each tabbed section with table of contents for section, arranged in systematic order

F Product Data Sheets Provide specification and catalog sheets showing configuration, manufacturer's specifications, models, options, and styles of equipment and major components being provided Product data sheets will show project specific information with inapplicable information deleted by removal Insert in tabbed section(s)

G Text

1 Include only those sheets pertinent to specific project
2 Each sheet shall

a Identify specific product or part installed
b Identify text applicable to product or part installed
c Contain no inapplicable information

H Drawings

1 Supplement text with drawings to clearly illustrate following

a Product and components
b Relations of component parts of equipment and systems
c Control and flow diagrams

2 Drawings to be actual drawings of equipment from manufacturer "Typical" drawings not acceptable, unless they accurately illustrate actual installation

I Specially written information, as required to supplement text for particular installation

1 Provide explanation of interrelationships of equipment and components, and effects one component has on another or entire system
2 Provide overall instructions and procedures for equipment tying in instructions and procedures for separate components into unified instructional package
3 Provide glossary of special terms used by manufacturer
4 Organize in consistent format under separate headings for different procedures
5 Provide logical sequence of instructions for each procedure

J Copy of each warranty, bond or service contract issued

1 Provide information sheet for OWNER'S personnel to explain following

a Proper procedures in event of failure or malfunction to prevent voiding warranty
b Instances affecting validity of warranties or bonds

1 05 SPECIFIC CONTENT OF DATA FOR EQUIPMENT AND SYSTEMS

A Specific content, for each unit of equipment and system, shall include following

1 Description of Unit and Component Parts

a Function, normal operating characteristics, and limiting conditions
b Performance curves, engineering data, and tests as applicable
c Complete nomenclature and commercial number of replaceable parts
d Complete nameplate data
e P&ID numbers for equipment as set forth in Drawings

2 Operating Procedures

a Startup, break-in, and normal operating instructions
b Regulation, control, stopping, shutdown, and emergency instructions
c Summer and winter operating instructions, as applicable
d Special operating instructions

3 Maintenance Procedures

a Routine maintenance operations
b Guide to troubleshooting
c Disassembly, repair, and reassembly instructions
d Alignment, adjusting, and checking instructions

4 Servicing and Lubrication Schedule

a List of lubricants required and quantity to be applied
b Schedule of lubrication
c Schedule for other routine maintenance

5 Manufacturer's printed instructions regarding safety precautions for both (a) protection of personnel operating the equipment and systems and (b) prevention of damage to the equipment and systems

6 Description of sequence of operation of controls

7 Original manufacturer's parts list, illustrations, assembly drawings, and diagrams required for maintenance

a Predicted life of parts subject to wear
b Items recommended to be stocked as spare parts and quantities of same

8 As-approved control diagrams These shall be ladder diagrams, instrumentation loop diagrams, and electrical schematics as appropriate

9 Bill of material

10 Copy of each manufacturer start-up report for equipment included each section

11 Other data as required under pertinent sections of Specifications

B Specific content for each electric and electronic system, as applicable to equipment such as switchgear, motor control centers, panelboards, switchboards, starters, breakers, and relays shall include following

1 Description of System and Component Parts.

a Function, normal operating characteristics, and limiting conditions
b Performance curves, engineering data, rating tables, and tests as applicable
c Complete nomenclature and commercial number of replaceable parts
d Complete nameplate data
e P&ID numbers for equipment as set forth on Drawings

2 Circuit Directories of Panelboards

a Electrical service
b Controls
c Communications

3 Complete instrumentation loop diagrams with tabulated listing of components in each control circuit or loop

4 Operating Procedures

a Routine and normal operating instructions
b Sequences required
c Special operating instructions

5 Maintenance Procedures

a Routine maintenance operations
b Guide to troubleshooting
c Disassembly, repair, and reassembly instructions
d Adjustment and checking instructions

6 Manufacturer's printed instructions regarding safety precautions for both (a) protection of personnel operating the equipment and systems and (b) prevention of damage to the equipment and systems

7 List of original manufacturer's spare parts and recommended quantities maintained in storage.

8 Other data as required under pertinent sections of Specifications

C Prepare and include additional data when need for such data becomes apparent during instruction of OWNER'S personnel as requested by OWNER

1 06 SUBMITTAL SCHEDULE

A Submit 6 copies of complete O&M data, bound in covers bearing suitable identification, for review within 30 days after time CONTRACTOR receives approved Shop Drawings from ENGINEER for all equipment included in the project

B Submit one electronic copy of the complete O&M manual in pdf format

C ENGINEER'S review and acceptance of O&M data will be only for conformance with requirements of this section, for form of submittal and organization of data and completeness of information provided, but not for technical content or coordination between individual suppliers of equipment or system(s)

D ENGINEER will be sole judge of completeness of data

E Approval of O&M Manual submittal will be one of the conditions of CONTRACTOR receiving final payment for contract

END OF SECTION

SECTION 02100
SITE PREPARATION

PART 1 GENERAL

1 01 SUMMARY

A Section Includes

1 Clearing and grubbing
2 Stripping topsoil

1 02 DEFINITIONS

A Structures and Surface Features Existing structures and surface features including buildings, pavements, curb and gutter, signs, posts, fences, trees, shrubs, landscaped surface features, and other miscellaneous items

B Utilities Existing gas mains, water mains, steam lines, electric lines and conduits, telephone and other communication lines and conduits, sewer pipe, cable television, other utilities, and appurtenances

C Clearing and Grubbing Cutting and disposing of trees, brush, windfalls, logs, and other vegetation, and removing and disposing of roots, stumps, stubs, grubs, logs, and other timber

D Salvaged Topsoil Natural loam, sandy loam, silt loam, silty clay loam, or clay loam humus-bearing soils available from overlying portions of areas to be excavated for construction

PART 2 PRODUCTS

(Not Used)

PART 3 EXECUTION

3 01 PREPARATION

A Provide 48 hours notice, prior to beginning construction, to owners of existing utilities

B Provide protection and support during construction for existing utilities, structures, and surface features at no separate pay

3 02 CLEARING AND GRUBBING

A Clear and grub areas specified on the Drawings

B Remove shrubs, trees, stumps, vegetation, rubbish, and other perishable or objectionable matter during clearing and grubbing operations

C Grub to depth of not less than 12 in below original ground surface or subgrade not less than 36 in where roots and stumps exist

D Dispose of materials removed by clearing and grubbing in accordance with applicable regulations

3 03 STRIPPING TOPSOIL

A Cut or mow and remove grass, weeds, and other vegetation before stripping topsoil

B Remove topsoil to entire depth in areas where grade is to be raised and in areas to be covered by structure, walk or paving Stockpile area to be arranged with Engineer Stockpile for proper drainage

C Strip stockpile areas of vegetation prior to stockpiling

D Stripped topsoil shall be free from clay, stones, vegetation, and debris

END OF SECTION

SECTION 02210
SITE GRADING

PART 1 GENERAL

1 01 DEFINITIONS

A Influence Zone Under Foundations, Pavements, or Sidewalks Area below foundation or pavement and sidewalk subbase bounded by 1 horizontal to 2 vertical slope extending outward from 1-ft beyond outer edge of foundation, pavement or sidewalk

B Influence Zone Around Piping or Electrical Ducts Area below limits bounded by line 12 in above pipe or duct and by 1 horizontal to 2 vertical slope extending outward from that line 1-ft beyond outer edge of pipe or duct

1 02 PROJECT/SITE CONDITIONS

A Notify corporations, companies, individuals or authorities owning above or below ground conduits, wires, pipes or other utilities running to property or encountered during grading operations

B Contractor shall be responsible for coordinating the removal and relocation of services which shall be completed by owners of said services

C Protect, support, and maintain conduits, wires, pipes or other utilities that are to remain in accordance with requirements of owners of said services

PART 2 PRODUCTS

2 01 FILL MATERIALS

A Conform to requirements of Section 02220 & Section 02221

PART 3 EXECUTION

3 01 EXAMINATION

A Examine surfaces to receive fill to determine existence of areas loosened by frost action, softened by flooding or weather or of unsuitable materials

3 02 PREPARATION

A Fill settled areas where excavations or trenches were backfilled and holes made by demolition, tree removal, and site preparation work

B Natural soils or compacted fill softened by frost, flooding or weather shall be removed, replaced, and compacted

C Remove unsuitable material from under walks, parking, and driveway areas

D Proof roll areas to receive fill material to detect soft or loose zones prior to placing fill Remove and replace soft or loose zones

E Keep construction site free-draining

F Plow, step, or bench slopes steeper than 1 vertical to 4 horizontal

G Disc level surfaces

H Grading within influence zone of existing or future structures or piping and electrical ducts shall be in accordance with Section 02220

3 03 FILL USAGE

A Controlled or Structural Within influence zone under pavements or sidewalks

3 04 PLACING FILL

A Conform to requirements of Section 02220

3 05 FIELD QUALITY CONTROL

A Rough Grading Tolerances

1 Grade to 4 in below finished grade in areas to receive topsoil, unless new grade is less than 4 in above existing grade Grade to bottom of base course in areas to receive paving or riprap Maximum allowable variation from design elevation is 1 in in 10 ft Degree of finish shall be ordinarily obtainable from either blade-grader or scraper operations, except as otherwise specified

2 Rough grading areas, including excavated and filled sections and adjacent transition areas shall be reasonably smooth, compacted, and free from irregular surface changes

B Conform to requirements of Section 02220

C Degree of Compaction ASTM D698 and D2922

D Moisture Content of Controlled Fill Within 3% of optimum when placed and compacted

3 06 ADJUSTMENT AND CLEANING

A Excess Material

1 OWNER has first right to excess grading material suitable for backfilling or site grading, not required at job site

2 Remove material not required by OWNER from site at the contractor's expense

B Stockpile material suitable for backfill where indicated on Drawings or designated by ENGINEER Place no fill where trenches for sewers, water lines or other utilities will be located

C Place material not suitable for backfilling or site grading and unsuitable materials in designated spoil areas and grade to drain If no spoil areas are provided on-site, remove excess material from site

D Rough grade areas within grading lines and areas which are disturbed to achieve lines and grades indicated on Drawings, with allowance for thickness of pavements, sidewalks, and topsoil

END OF SECTION

Std. 7/1/87
Revised 10/1/02

ITEM 2220

STRUCTURAL EXCAVATION AND BACKFILL

I GENERAL

A Description This section describes the excavation for and backfilling around completed structures and the disposal of all excess excavated material All operations required for the proper completion of the excavation work, including sheeting, shoring and bracing, dewatering of excavations and compaction of backfill are included under this section

B Protection Before the start of earthwork operations, adequately protect existing structures, utilities, trees and shrubs and other permanent objects Costs resulting from damage to permanent facilities due to negligence or lack of adequate protection will be charged to the contractor The contractor will also be charged for damage to facilities scheduled for later removal or demolition if the damage sufficiently impairs proper operation to the extent that temporary replacement or repair is required

C Blasting Blasting will not be permitted

D Related Work (if utilized in this project)

1 Item 2227 - Waste Material Disposal

II MATERIALS

A Regular Backfill Where no other backfill is specified, use suitable soils from the excavation as backfill material

B Sand Backfill Where sand backfill is specified, use reasonably clean bank sand from an approved source The sand must be free from large lumps of clay, rubbish, organic matter or other deleterious substances Not more than 12 percent by weight shall pass the 200 mesh sieve and the plasticity index shall not exceed 4 0

C Select Fill Select fill shall be lean clay to sandy, lean clay soil with a maximum liquid limit of 35 and a PI range of 8 to 20 and a minimum of 60 percent passing the No 200 sieve Select fill may consist of lime stabilized soils excavated on site Lime stabilization of 8-inch loose lifts should be performed by blending 25 pounds of hydrated lime per square yard into 8-inch loose lift of fill soils

D Cement Stabilized Backfill

1 Cement stabilized sand shall be used for backfill and bedding as called for on the Plans and/or Exhibits or as directed by the Engineer

2 Cement shall consist of Type I portland cement conforming to ASTM C 150

3 Sand shall be clean, durable sand containing not more than the following

a Deleterious materials

1) Clay lumps, ASTM C 142, less than 0 5 percent

2) Lightweight pieces, ASTM C 123, less than 5 0 percent

3) Organic impurities, ASTM C 40, shall not show a color darker than the standard color

4) Aggregate Use sand containing deleterious materials not to exceed the following requirements by weight

Material removed by decantation	5 0%
Other deleterious substances such as coal, shale, or coated grains of soft flaky particles	2 0%

Gradation Requirements

Retained on d-inch sieve	0%
Retained on ¼-inch sieve	0% - 5%
Retained on 20-mesh sieve	15% - 50%
Retained on 100-mesh sieve	80% - 100%

b Plasticity index shall be six (6) or less when tested in accordance with ASTM D 423 and ASTM D 424

4 Water shall be potable, free of oils, acids, alkalies, organic matter or other deleterious substances

5 Sand cement mixture product shall consist of the proper percentage of cement per cubic yard or per ton of sand with sufficient water to hydrate the cement

6 Mix in a pug mill using not less than 1½ sacks of cement per cubic yard of mixture with sufficient water to hydrate the cement

III EXECUTION

A Excavation

1 Excavation work shall be unclassified and includes removal of all types of materials encountered without exception Make excavations to lines and grades indicated on Plans and/or Exhibits Complete excavations within the tolerances specified Perform all work in conformity with the rules and regulations of the Federal Occupational Safety and Health Act

2 Shoring, Bracing, Dewatering Provide shoring, bracing and dewatering of excavations required to properly and safely complete the work as shown Construct shoring and bracing to prevent the excavation from extending beyond specified or indicated limits and to protect workmen Keep excavations dewatered by drainage, pumps or well points as necessary while work is in progress Dewatering methods are subject to approval Remove shoring, bracing and sheathing as excavations are backfilled in a manner to prevent injurious caving

3 Structures Other than Pipes

a Wherever practicable cut all footing excavations to neat lines with a tolerance of minus 1-inch or plus 3-inches and place concrete to bear against earth sides Cut all excavations a sufficient distance from walls, shafts or similar elements of structures to allow for placing and removing forms and for inspection Make no excavation beyond a vertical plane 3-feet outside of footing lines or wall lines except as shown or specifically authorized

b Carry all excavations to the elevations shown and to deeper levels as directed when suitable foundation soils are not encountered at plan depth Remove all pockets of soft or otherwise unstable soils and replace with concrete or with suitable well compacted soil as directed

c Fill all unauthorized excessive excavation with concrete at no change in the contract sum

d Protect all open excavations from rainfall or excessive drying Provide pumps and other equipment as required to keep excavations reasonably free of water at all times and completely free of water during placement of concrete

e Do not remove the last 4-inch depth of excavation for slabs or footings until reinforcing steel and concrete are ready to be placed

B Backfill

1 Complete backfill to the surface of natural ground or to the lines and grades shown on Plans and/or Exhibits Except where special materials are requested, use suitable soils from the excavation as backfill material Do not use peat or other organic matter, silt, muck, debris or similar materials Deposit backfill in uniform layers and compact each layer as specified

2 Select Backfill at Structures Place backfill as promptly as practicable after completion of each structure or portion of a structure Do not, however, place backfill against concrete walls or similar structures until concrete forms are removed Remove shoring and bracing as the work progresses Take care to prevent any wedging action of backfill against the structure Step cut (bench) or serrate the slopes bounding the excavation as required to prevent wedging

3 Compacting Backfill Place material in uniform layers of prescribed maximum thickness and wet or dry the material to approximately optimum moisture content Compact with power-driven hand tampers to the prescribed density

a Regular and Select Backfill Place in 8-inch maximum layers, loose measure Compact to not less than 95 percent of maximum soil density as determined by ASTM D 698, within 2 percent of optimum moisture content

b Sand Backfill and Filter Material Backfill Place in 6-inch maximum layers, loose measure Compact to not less than 95 percent of maximum soil density as determined by ASTM D 698, within 3 percent of optimum moisture content

c Cement Stabilized Backfill Place in 8-inch maximum layers Compact to a dry density of 95% of ASTM D 698 without additional moisture control The sand-cement mixture shall produce a minimum unconfined compressive strength of one hundred pounds per square inch (100 psi) in 48 hours when compacted to 95 percent of ASTM D 698 without additional moisture control, cured (ASTM C 31, Hem 9), and tested in accordance with ASTM C 31

4 Disposal of Excess Material Dispose of excess or unsuitable material from the excavation off the job site

SECTION 02227
TRENCHING, BEDDING AND BACKFILL FOR UTILITIES

PART 1 GENERAL

1 01 REFERENCES

A ASTM D558 – Test Methods for Moisture – Density Relations of Soil Cement Mixtures

B ASTM D698 - Test Methods for Moisture-Density Relations of Soils and Soil-Aggregate Mixtures, Using 5 5-lb (2 49-kg) Rammer and 12-in (304 8-mm) Drop

C ASTM D1556 - Test Method for Density in Place by the Sand-Cone Method

D ASTM D2487 - Classification of Soils for Engineering Purposes

E ASTM D2922 - Test Method for Density of Soil and Soil-Aggregate in Place by Nuclear Methods (Shallow Depth)

F ASTM D3017 - Test Method for Water Content of Soil and Rock in Place by Nuclear Methods (Shallow Depth)

G ASTM D4318 - Test Method for Liquid Limit, Plastic Limit, and Plasticity Index of Soils

H TxDOT Tex-101-E - Preparation of Soil and Flexible Base Materials for Testing

I TxDOT Tex-110-E - Determination of Particle Size Analysis of Soils

J Federal Regulations, 29 CFR Part 1926, Standards-Excavation, Occupational Safety and Health Administration (OSHA)

1 02 SUBMITTALS

A Submit project record documents under provisions of Section 01720 - Project Record Documents

B Record location of utilities as installed referenced to survey benchmarks Include location of utilities encountered or rerouted Give stations, horizontal dimensions, elevations, inverts and gradients

1 03 QUALITY ASSURANCE

A Sample and analyze soil materials for soil classification and compaction in accordance with provisions of Section 01410 - Testing Laboratory Services

PART 2 PRODUCTS

2 01 EQUIPMENT

A Perform excavation with hydraulic excavator or other equipment suitable for achieving the requirements of this Specification

B Excavation by hand is permitted, but no extra payment will be made for hand excavation without prior written approval by ENGINEER

C Use equipment which will produce the degree of compaction specified Until a minimum cover of 12 inches is obtained over pipes, conduits, and ducts, use only hand-operated tamping equipment Do not use heavy compacting equipment until adequate cover is attained to prevent damage to pipes, conduits, or ducts

2 02 MATERIAL CLASSIFICATIONS

A Fill and backfill material shall conform to classifications of Section 02251 – Bedding & Backfill Material

B Cement Stabilized Sand CONFORM TO REQURIEMENT OF Section 02252 – Cement Stabilized Sand

C Concrete Backfill. Conform to Class F (2000 psi) concrete as specified in Section 03300A - Cast-in-Place Concrete

PART 3 EXECUTION

3 01 NOTIFICATION OF UTILITY COMPANIES

A Call utility companies at least 48 hours, excluding weekends and holidays, before starting excavation Request a check of buried lines or cables in the vicinity of proposed work Acquire temporary construction permits if required

3 02 TRENCHING

A Except as otherwise specified or shown on the Drawings, construct underground utilities in open cut trenches with vertical sides. Conform to requirements of Section 01526 - Trench Safety Systems

B Determine trench excavation widths using the following schedule as related to pipe outside diameter (O D)

Nominal Pipe Size, Inches	Minimum Trench Width, Inches
Less than 18	O D + 18
18 to 30	O D + 24
36 to 42	O D + 36
Greater than 42	O D + 48

C Remove all ledge rock, boulders and large stones within 4 inches of sides of the pipe

D Extra width is also allowed for installation of well point headers or manifolds and pumps in trenches where depth of trench makes it uneconomical, or not feasible, to pump from surface installation Provide sufficient space between cross braces to permit handling of forms, pipe, and other materials

E Upon discovery of unknown utilities, badly deteriorated utilities not designated for removal, or concealed conditions, discontinue work at that location Notify ENGINEER and obtain instructions before proceeding in such areas

F Protect trees, shrubs, lawns, existing structures, and other permanent objects outside of grading limits

G Protect above-grade and below-grade utilities which are to remain

3 03 TRENCH BOTTOM

A Make foundation or bottom of trench as uniform as practicable Remove wet, soft, spongy, or otherwise unstable soils to a minimum depth of 2 feet below the trench bottom as directed and approved by ENGINEER

B Remove rocks projecting above bottom of trench

C Place non-woven geotextile fabric and backfill over excavations with crushed stone

3 04 HANDLING EXCAVATED MATERIALS

A Classify excavated materials suitable for backfilling per Section 02251 – Bedding and Backfill Material Place material which is suitable for backfilling in orderly piles at a sufficient distance from the trench to prevent slides or cave-ins

B Do not use excavated material composed of large chunks, stones, debris, organic matter, or clods for backfilling.

C Provide additional backfill material in accordance with requirements of this Section if adequate quantities of suitable material are not available from excavation and trenching operations at the job site

3 05 DEWATERING

A Do not excavate in the presence of free water Refer to Section 01563 - Control of Ground Water and Surface Water. Do not place bedding, pipe, conduit, or ducts or perform embedment or backfill in the presence of free water

3 06 BEDDING

A Place bedding material of the type shown on the Drawings Compact to 95% of maximum Procter density as defined by ASTM D 698.

B No bedding is required for electrical conduits

3 07 BACKFILL AND COMPACTION

A Preparation for Backfilling

B Backfill piping and conduits as shown on Drawings and restore surface as soon as practical

1 Allow ENGINEER to observe piping before it is backfilled

2 Where damage to completed work is likely to result from withdrawal of sheeting, leave the sheeting in place Do not leave untreated sheeting in place beneath structures or pavements
3 Remove formwork of conduits

C Backfill pipe zone with materials shown on the Drawing Place in 8 inch loose layers and compact to 95% of maximum Proctor density defined in ASTM D 698

D Backfill trench segments outside of areas to be paved with selected material from trench excavation Place backfill material in 6-inch loose layers Compact each layer to 95 percent of maximum density as determined by ASTM D698 Compact the backfill at a moisture content sufficient to develop required density

3 08 FIELD QUALITY CONTROL

A Testing will be performed under provisions of Section 01410 - Testing Laboratory Services

B Tests will be preformed on minimum of three different samples of each material type for plasticity characteristics, in accordance with ASTM D4318, and for gradation characteristics, in accordance with Tex-101-E and Tex-110-E Additional classification tests will be performed whenever there is a noticeable change in material gradation or plasticity

C In-place density tests of compacted fill and backfill will be performed according to ASTM D1556, or ASTM D2922 and ASTM D3017, and at the following frequencies and conditions

1 A minimum of one test for every 40 cubic yards of compacted bedding or backfill material
2 A minimum of three density tests for each full shift of work
3 Density tests must be performed in placement areas
4 The number of tests will be increased if inspection determines that soil type or moisture content are not uniform or if compacting effort is variable and not considered sufficient to attain specified density uniformly

D At least three tests for moisture-density relationships will be performed initially for each type of backfill material in accordance with ASTM D698 and for cement stabilized sand in accordance with ASTM-D 558 Additional moisture-density relationship tests will be performed whenever there is a noticeable change in material gradation or plasticity

E If tests indicate work does not meet specified compaction requirements, recondition, recompact, and retest twice at CONTRACTOR's expense

3 09 DISPOSAL OF EXCESS MATERIAL

A Dispose of excess materials in accordance with requirements of Section 01560 -Protection of Environment

3 10 PROTECTION

A Prevent erosion of trenches and backfill Do not allow water to pond in trenches

B Maintain trench excavation and backfill areas until start of subsequent work Repair and recompact slides, washouts, settlements, or areas with loss of density at no additional cost to OWNER

* * * END OF SECTION * * *

Section 02251
BEDDING AND BACKFILL MATERIAL

PART 1 GENERAL

1 01 SECTION INCLUDES

A Washed shell bedding and backfill

B Bank run sand bedding and backfill

C Concrete sand bedding

D Gem sand bedding

E Pea gravel bedding

F Crushed limestone bedding

G Crushed stone

H Fill and Backfill Material

1 02 UNIT PRICES

A No payment will be made under this Section unless specifically noted in bid documents Include payment in unit price for applicable utility or structure installation section

1 03 REFERENCES

A ASTM C33 - Standard Specifications for Concrete Aggregate

B ASTM C40 - Standard Test Method for Organic Impurities in Fine Aggregates for Concrete

C ASTM C123 - Standard Test Method for Lightweight Pieces in Aggregate

D ASTM C131 - Standard Test Method for Resistance to Degradation of Small-Size Course Aggregate by Abrasion and Impact in the Los Angeles Machine

E ASTM C142 - Standard Test Method for Clay Lumps and Friable Particles in Aggregates

F ASTM C136 - Standard Test Method for Sieve Analysis of Finer and Course Aggregates

G ASTM D1140 – Standard Test Method for Amount of Material in Soils Finer Than No 200 Sieve

H ASTM D2487 - Standard Test Method for Classification of Soils for Engineering Purposes (Unified Soil Classification System)

I ASTM D4318 - Test Method for Liquid Limit, Plastic Limit, and Plasticity Index of Soils

J TxDOT Tex-101-E - Preparation of Soil and Flexible Base Materials for Testing

K TxDOT Tex-110-E - Determination of Particle Size Analysis of Soils

1 04 SUBMITTALS

A Submittals shall conform to requirements of Section 01300 - Submittals

B Submit samples of bedding and backfill materials for testing

C Submit a copy of temporary easement or approval from landowner for stockpiling sand bedding and backfill material on private property, adjacent to the Project, prior to stockpile operations

1 05 TESTS

A Tests and analysis of soil materials will be performed by Testing Laboratory in accordance with appropriate reference standards under provisions of Section 01410 – Testing Laboratory Services

1 06 DELIVERY, STORAGE, AND HANDLING

A Do not stockpile sand bedding and backfill material on the Project site unless approved in advance by Engineer Obtain approval from landowner for storage of sand bedding and backfill material on adjacent private property

B When stockpilling of sand bedding and backfill material is approved at or near the Project site, use appropriate covers to eliminate blowing of sand into adjacent areas

C Stockpiles shall be made up of layers of processed aggregate materials Load material by making successive vertical cuts through entire depth of stockpile

PART 2 PRODUCTS

2 01 MATERIALS

A Bedding and backfill material shall be free of stones greater than 6 inches, free of roots, trash, mud balls and conform to the following limits for deleterious materials

1 Clay lumps Less than 0 5 percent when tested in accordance with ASTM C142

2 Lightweight pieces. Less than 5 percent when tested in accordance with ASTM C123

3 Organic impurities No color darker than standard color when tested in accordance with ASTM C40

B Washed Shell Durable particles of oyster shell with natural binder or approved fine aggregate meeting the following requirements

1 Grading within the following limits when washed and tested in accordance with ASTM C136

Sieve	Percent Retained by weight
2 inch	0 to 8
1 inch	5 to 35
1/4 inch	45 to 75
No 200	85 to 98

2 Material passing the 1/4-inch sieve shall meet the following requirements when tested in accordance with ASTM D4318

a Liquid limit not exceeding 35

b Plasticity index not exceeding 10

C Bank Run Sand Durable bank run sand classified as SP, SW, or SM by the Unified Soil Classification System (ASTM D2487) meeting the following requirements

1 Less than 15 percent passing the number 200 sieve when tested in accordance with ASTM D140

2 Material passing the number 40 sieve shall meet the following requirements when tested in accordance with ASTM D4318·

a Liquid limit not exceeding 25

b Plasticity index not exceeding 7

D Concrete Sand Natural sand, manufactured sand, or a combination of natural and manufactured sand conforming to the requirements of ASTM C33 and graded within the following limits when tested in accordance with ASTM C136

Sieve	Percent Passing
3/8 inch	100
No 4	95 to 100
No 8	80 to 100
No 16	50 to 85
No 30	25 to 60
No 50	10 to 30
No 100	2 to 10

E Gem Sand Sand conforming to the requirements of ASTM C33 for course aggregates specified for number 8 size and graded within the following limits when tested in accordance with ASTM C136

Sieve	Percent Passing
3/8 inch	95 to 100
No 4	60 to 80
No 8	15 to 40

F Pea Gravel Durable particles composed of small, smooth, rounded stones or pebbles and graded within the following limits when tested in accordance with ASTM C136

Sieve	Percent Passing
1/2 inch	100
3/8 inch	85 to 100
No 4	10 to 30
No 8	0 to 10
No 16	0 to 5

G Crushed Limestone Durable particles of crusher-run broken limestone obtained from an approved source and meeting the following requirements

1 Los Angeles abrasion test percent of wear not to exceed 40 when tested in accordance with ASTM C131

2 Plasticity Index for material passing the No 4 sieve Less than 12 when tested in accordance with ASTM D4318

3 Grading in accordance with Tex-101-E and Tex-110-E

Sieve	Percent Passing by Weight for Pipe Embedment By Ranges of Nominal Pipes Sizes		
	>15"	15" – 8"	<8"
1"	95-100	100	-
3/4"	60-90	90-100	100
1/2"	25-60	-	90-100
3/8"	-	20-55	40 -70
No 8	0 -5	0-10	0-15
No 8	-	0-5	0-5

2 Grading in accordance with Tex-101-E and Tex-110-E within the following limits

Sieve	Percent Retained by weight
2 1/2 inch	0
1 3/4 inch	0 to 10
No 4	45to 75
No 40	60 to 85

H Fill and backfill material shall conform to the following classifications The classifications follow Unified Soil Classification Symbols as defined in ASTM D2487

1 Class I Well graded sands and gravels, gravel-sand mixtures, crushed well graded rock, little or no fines (GW, SW)

a Plasticity Index - Nonplastic
b Gradation - D_{60}/D_{10} - greater than 4 percent passing No 200 Sieve - less than or equal to 5 percent

2 Class II Poorly graded gravels and sands, silty sands and gravels, little to moderate fines (GM, GP, SP, SM)

a Plasticity Index Nonplastic to 4 percent
b Gradation percent passing No 200 Sieve - less than 5 percent (GP, SP)
c. Gradation percent passing No. 200 Sieve - between 12 percent and 50 percent (GM, SM)

3 Class III Clayey gravels and sands, poorly graded mixtures of sand, gravel, and clay (GC, SC)

a Plasticity Index greater than 7
b Gradation percent passing No 200 Sieve between 12 percent and 50 percent

4 Soils with dual designation according to ASTM D2487 shall be used according to the least restrictive class

PART 3 EXECUTION - Not Used

END OF SECTION

SECTION 02252
CEMENT STABILIZED SAND

PART 1 GENERAL

1 01 SECTION INCLUDES

A Cement stabilized sand for backfill and bedding

1 02 UNIT PRICES

A No payment will be made for cement stabilized sand under this Section unless specifically noted in bid documents Include payment for cement stabilized sand in unit price for applicable utility or structure installation section

1 03 REFERENCES

A ASTM C31 - Standard Practice for Making and Curing Concrete Test Specimens in the Field

B ASTM C33 - Standard Specification for Concrete Aggregates (Fine Aggregate)

C ASTM C40 - Standard Test Method for Organic Impurities in Fine Aggregates for Concrete

D ASTM C94 - Standard Specification for Ready-Mixed Concrete

E ASTM C123 - Standard Test Method for Lightweight Pieces in Aggregate

F ASTM C142 - Standard Test Method for Clay Lumps and Friable Particles in Aggregates

G ASTM 2140 – Standard Test Method for amount of material in soil fine

H ASTM C150 - Specification for Portland Cement

I ASTM D698 - Test Methods for Moisture-Density Relations of Soils and Soil- Aggregate Mixtures Using 5 5-lb (2 49-kg) Rammer and 12-in (304.8 mm) Drop

J ASTM D1633 - Standard Test Method for Compressive Strength of Molded Soil- Cement Cylinders

K ASTM D2487 - Standard Test Method for Classification of Soils for Engineering Purposes (Unified Soil Classification System)

L ASTM D4318 - Test Method for Liquid Limit, Plastic Limit, and Plasticity Index of Soils

1 04 SUBMITTALS

A Submittals shall conform to requirements of Section 01300 - Submittals

B Submit proposed design mix and test data for sand-cement mixture

1 05 DESIGN REQUIREMENTS

A Design sand-cement mixture to produce a minimum unconfined compressive strength of 100 pounds per square inch in 48 hours when compacted to 95 percent of ASTM D698 and when

cured in accordance with ASTM C31, item 9, and tested in accordance with ASTM C31 Mix shall contain a minimum of 2 sacks of cement per cubic yard

PART 2 PRODUCTS

2 01 MATERIALS

A Cement Type 1 Portland cement conforming to ASTM C150

B Sand Clean, durable sand meeting grading requirements for fine aggregates of ASTM C33 and the following requirements

1 Classified as SW, SP or SM by the United Soil Classification System of ASTM D2487 Verify through referenced tests that content of deleterious materials in sand is within following limits

a Clay lumps, ASTM C142, less than 0 5 percent
b Lightweight pieces, ASTM C123, less than 5 0 percent
c Organic impurities, ASTM C40, color no darker than the standard color

2 Plasticity index of 4 or less when tested in accordance with ASTM D4318

C Water Potable water, free of oils, acids, alkalies, organic matter or other deleterious substances, meeting requirements of ASTM C94

2 02 MIXING MATERIALS

A Add required amount of water and mix it thoroughly in a pug-mill type mixer

B Stamp batch ticket at plant with time of loading Material not placed and compacted within 4 hours after loading shall be rejected

PART 3 EXECUTION

3 01 PLACING

A Place sand-cement mixture in 8-inch-thick loose lifts and compact to 95 percent of ASTM D698 Perform compaction of sand-cement mixture within 4 hours after addition of water to mix at the plant

B Do not place sand-cement mixture in standing or free water

3 02 FIELD QUALITY CONTROL

A Testing will be performed under provisions of Section 01410 - Testing Laboratory Services

B Random samples of delivered product will be taken in the field at point of delivery and tested in accordance with ASTM D1633

END OF SECTION

SECTION 02831
CHAIN LINK FENCES AND GATES

PART 1 GENERAL

1 01 SECTION INCLUDES

A Fence framework, fabric, and accessories for vinyl-coated galvanized steel chain link fencing with 45 barbed wire supporting arms for three strands of barbed wire and double swing gate for vehicle access

B Excavation for post bases, concrete foundation for posts and center drop for gates

C Manual gates and related hardware

1 02 MEASUREMENT AND PAYMENT

A Refer to the Bid Proposal for pricing

1 03 REFERENCES

A ANSI/ASTM A123 - Zinc (Hot Dip Galvanized) Coatings on Iron and Steel Products

B ANSI/ASTM F567 - Installation of Chain-Link Fence

C ASTM A116 - Zinc-Coated (Galvanized) Steel Woven Wire Fence Fabric

D ASTM A120 - Pipe, Steel, Black and Hot-Dipped Zinc Coated (Galvanized) Welded and Seamless, for Ordinary Uses

E ASTM A153 - Zinc Coating (Hot-Dip) on Iron and Steel Hardware

F ASTM A392 - Zinc-Coated Steel Chain-Link Fence Fabric

G ASTM A428 - Weight of Coating on Aluminum-Coated Iron or Steel Articles

H ASTM C94 - Ready-mixed Concrete

I ASTM F573 - Residential Zinc-Coated Steel Chain Link Fence Fabric

J ASTM F668 - Poly (Vinyl Chloride) (PVC) Coated Steel Chain Link Fence Fabric

K Chain Link Fence Manufacturers Institute (CLFMI) - Product Manual

L FS RR-F-191 - Fencing, Wire and Post Metal (and Gates, Chain Link Fence Fabric, and Accessories)

1.04 SYSTEM DESCRIPTION

A Fence Height As indicated on Drawings or as noted to match height of existing

B Extension Arms for Barbed Wire Match existing or as specified and shown on Drawings

C Line Post Spacing Not exceeding 10 feet

1.05 SUBMITTALS

A Submit under provisions of Section 01300

B Shop Drawings Indicate plan layout, spacing of components, post foundation dimensions, hardware anchorage, and schedule of components

C Product Data. Provide data on fabric, posts, accessories, fittings and hardware that indicates that items match or exceed the quality of existing

1 06 QUALIFICATIONS

A Manufacturer Company specializing in manufacturing the products specified in this Section with minimum 3 years experience

1 07 FIELD MEASUREMENTS

A Verify that field measurements are as indicated on shop drawings

PART 2 PRODUCTS

2 01 GALVANIZED FENCING

A Vinyl Coating Coat fence components, except barbs, with the thermally bonded plasticized polyvinyl chloride (PVC) (ASTM F668-99A-Class 2B) Extruded coatings will not be accepted Color vinyl coating as specified in the plans Coat wire fabric with 7 mil Vinyl Coat other fence components with 10 mil Vinyl.

B Fence Fabric No 8 steel wire, hot galvanized after weaving, to match or exceed existing unless otherwise shown on plans Use fabric woven in a 2-inch chain link pattern, with knuckled selvages top and bottom

C Framework Hot-dipped galvanized with a minimum coating of 2 ounces per square foot, or 1 ounce per square foot plus 30 micrograms per square inch chromate conversion coating

D Line Posts 2 3/8" O D SCH 40 Conform to ASTM A570 Grade 45 steel or ASTM A569, cold rolled steel

E End Corner, Angle, and Pull Posts. 3" O D SCH 40 Conform to ASTM A570 Grade 45 steel or ASTM A569 for steel pipe

F Top Rails. Formed C-section 1.65 x 1.25-inch, or 1 6-inch round ASTM A569, 1 35 pounds per foot, or 1-5/8-inch outside diameter steel pipe, 2 27 pounds per foot. Select top rails that pass through openings in post tops provided for that purpose

G Fabric Ties Hog rings, galvanized steel wire not less than 9-gage with a zinc coating of not less than 1 2 ounces per square foot. Interlace a continuous 7-gage galvanized steel wire with the fabric along the extreme bottom of the fence.

H Bolts and Nuts Conform to ASTM A307, galvanized in accordance with AASHTO M232

I Horizontal Braces Fabricated of 1-5/8-inch, 2 27-pound copper bearing steel pipe

J Extension Arms and Barbed Wire

1 Extension Arms Project 45-degrees outward from the fenced area
2 Barbed Wire 3 strands per extension arm, each strand of double 12 5-gage with 14-gage, 4-point parts at 5 inches

K Hot-Dip galvanized component metal parts not covered by ASTM specifications above with minimum standard zinc coating in accordance with ASTM A153 before application of vinyl coating

L Gates Provide either swing or slide as shown on the Drawings.

1 Swing Gates Hinged to swing 90 degrees from closed to open or hinged to swing 180 degrees from close to open as shown on the Drawings
2 Slide Gates: Roller type with no vertical obstructions
3 Gate Leaves. Provide intermediate members and diagonal stress rods as required for rigid construction to eliminate sag or twist.
4 Barbed Wire Extension. Fit gates with vertical extension arms or extended frame end members to carry barbed wire
5 Gate Posts 4-inch, 9 1 pound pipe
6 Gate Frames 2-inch outside diameter, castings
7 Fabric Same as for the fence
8 Malleable Iron Fittings Ball and socket hinges, catches and stops
9 Padlocks One for each gate with 3 keys each
10 Posts for Single Gates Same as end posts

M Fence Slats

1 Extrude high density virgin polyethylene and ultra violet inhibition slats that are attached with monel-clinch-lock staples
2 Slat color to be specified by Engineer
3 Slats are not required on this project
4 Contractor to match existing

PART 3 EXECUTION

3 01 INSTALLATION

A Install chain link fence in accordance with the directions of the manufacturer and this Specification

B Install fence posts at not more than 10-foot centers and into the ground in a Class A concrete base as shown on the drawings Allow concrete to cure for at least 7 days before erecting remainder of fence Fasten fabric to line posts with wire ties spaced about 14 inches apart and to top rail spaced about 24 inches apart

C Use standard chain link fence stretching equipment to stretch the fabric before tying it to the rails and posts Repeat the stretching and tying operations about every 100 feet

D Erect gates so they swing or slide in the appropriate direction Provide gate stops as required Secure hardware, adjust, and leave in perfect working order Adjust hinges and diagonal bracing so that gates will hang level Adjust rollers and guides of sliding gates so that gates are level

E At small natural swales or drainage ditches where it is not practical for fence to conform to the ground contour, span the opening below the fence with wire fastened to stakes of required length Install the finished fence plumb, taut, true to line and ground contour When directed, stake down the chain link fence at several points between posts

F Where new fence joins an existing fence, set a corner post and brace post at the junction and brace as directed If the connection is made at other than the corner of the new fence, install a brace at the last span of the old fence

END OF SECTION

SECTION 02920
TOPSOIL

PART 1 GENERAL

1 01 SECTION INCLUDES

A Storing and placing topsoil for finish grading and for seeding, sodding and planting

PART 2 PRODUCTS

2 01 TOPSOIL

A Topsoil shall be fertile, friable, natural sandy loam surface soil obtained from excavation or borrow operations having the following characteristics

1 pH value of between 5 5 and 6 5
2 Liquid limit topsoil not exceed 50
3. Plasticity index 10 or less
4 Gradation· maximum of 40 percent with a passing the #280 sieve

B Topsoil shall be reasonably free of subsoil, clay lumps, weeds, non-soil materials and other litter or contamination Topsoil shall not contain roots, stumps, and stones larger than 2 inches

C Obtain topsoil from naturally well drained areas where topsoil occurs at a minimum depth of 4 inches and has similar characteristics to that found at the placement site Do not obtain topsoil from areas infected with a growth of, or reproductive parts of nut grass or other noxious weeds

PART 3 EXECUTION

3 01 TOPSOIL EXCAVATION

A Conform to excavation and stockpiling requirements of Section 02100 - Site Preparation

3 02 PLACEMENT

A For areas to be seeded or sodded, scarify or plow existing material to a minimum depth of 4 inches, or as indicated on the Drawings Remove vegetable material and foreign inorganic material. Place 4 inches of topsoil on the loosened material and roll lightly with an appropriate lawn roller to consolidate the topsoil

3 03 PROTECTION

A Protect topsoil from wind and water erosion until planting is completed

END OF SECTION

SECTION 02921
HYDROMULCH SEEDING

PART 1 GENERAL

1 01 SECTION INCLUDES

A Seeding, fertilizing, mulching, and maintenance of areas indicated on Drawings

1 02 MEASUREMENT AND PAYMENT

A Unit Prices

1 Payment for hydromulch seeding is on a square yard basis
2 Refer to Section 01270 - Measurement and Payment for unit price procedures

B Stipulated Price (Lump Sum) If the Contract is a Stipulated Price Contract, payment for work in this Section is included in the total Stipulated Price

1 03 SUBMITTALS

A Submittals shall conform to requirements of Section 01330 - Submittal Procedures

B Submit certification from supplier that each type of seed conforms to these specifications and the requirements of the Texas Seed Law Certification shall accompany seed delivery

C Submit a certificate stating that fertilizer complies with these specifications and the requirements of the Texas Fertilizer Law

PART 2 PRODUCTS

2 01 MATERIALS

A Topsoil Conform to material requirements of Section 02920 - Topsoil

B Seed. Conform to U.S. Department of Agriculture rules and regulations of the Federal Seed Act and the Texas Seed Law Seed shall be certified 90 percent pure and furnish 80 percent germination and meet the following requirements·

1 Rye Fresh, clean, Italian rye grass seed (lollium multi-florum), mixed in labeled proportions As tested, minimum percentages of impurities and germination must be labeled Deliver in original unopened containers
2 Bermuda Extra-fancy, treated, lawn type common bermuda (Cynodon dactylon) Deliver in original, unopened container showing weight, analysis, name of vendor, and germination test results
3 Wet, moldy, or otherwise damaged seed will not be accepted
4 Seed requirements, application rates, and planting dates are

TYPE	APPLICATION RATE POUNDS/A	PLANTING DATE
Hulled Common Bermuda Grass 98/88 Unhulled Common Bermuda Grass 98/88	40 40	Jan 1 to Mar 31
Hulled Common Bermuda Grass 98/88	40	Apr 1 to Sep 30
Hulled Common Bermuda Grass 98/88 Unhulled Common Bermuda Grass 98/88 Annual Rye Grass (Gulf)	40 40 30	Oct 1 to Dec 31

C Fertilizer Dry and free flowing, inorganic, water soluble commercial fertilizer, which is uniform in composition Deliver in unopened containers which bear the manufacturers guaranteed analysis Caked, damaged, or otherwise unsuitable fertilizer will not be accepted Fertilizer shall contain minimum percentages of the following elements

1 Nitrogen 10 Percent
2 Phosphoric Acid 20 Percent
3 Potash 10 Percent

D Mulch

1 Virgin wood cellulose fibers from whole wood chips having a minimum of 20 percent fibers 0 42 inches in length and 0 01 inches in diameter
2 Cellulose fibers manufactured from recycled newspaper and meeting the same fiber content and size as for cellulose fibers from wood chips
3 Mulch shall be dyed green for coverage verification purposes

E Soil Stabilizer "Terra Tack 1" or approved equal

F Weed control agent Pre-emergent herbicide for grass areas, such as "Benefin," or approved equal

PART 3 EXECUTION

3 01 PREPARATION

A Place and compact topsoil in accordance with requirements of Section 02920 - Topsoil

B Dispose of Objectionable and Waste Materials in accordance with Section 01576 - Waste Material Disposal

3 02 APPLICATION

A Seed Apply uniformly at rates given in Paragraph 2 01 B for type of seed and planting date

B Fertilizer Apply uniformly at a rate of 500 pounds per acre

C Mulch Apply uniformly at a rate of 50 pounds per 1000 square feet

D Soil Stabilizer Apply uniformly at a rate of 40 pounds per acre

E Weed Control Agent Apply at manufacturer's recommended rate prior to hydromulching

F Suspend operations under conditions of drought, excessive moisture, high winds, or extreme or prolonged cold Obtain City Engineer approval before resuming operations

3 03 MAINTENANCE

A Maintain grassed areas a minimum of 90 days, or as required to establish an acceptable lawn For areas seeded in the fall, continue maintenance the following spring until an acceptable lawn is established

B Maintain grassed areas by watering, fertilizing, weeding, and trimming

C Repair areas damaged by erosion by re-grading, rolling and replanting

END OF SECTION

SECTION 03200
CONCRETE REINFORCEMENT

PART 1 GENERAL

1 01 REFERENCES

A American Concrete Institute (ACI)

1 117-90 - Standard Specification for Tolerances for Concrete Construction and Materials
2 318-92- Building Code Requirements for Reinforced Concrete
3 SP-66-88- ACI Detailing Manual

B American Society for Testing and Materials (ASTM)

1 A185 REV A-90- Standard Specification for Steel Welded Wire Fabric, Plain, for Concrete Reinforcement
2 A370-92 - Standard Test Methods and Definitions for Mechanical Testing of Steel Products
3 A615 REV A-92- Standard Specification for Deformed and Plain Billet-Steel Bars for Concrete Reinforcement
4 A706 REV B-92 - Standard Specification For Low-Alloy Steel Deformed Bars for Concrete Reinforcement

C American Welding Society (AWS)

1 D1 4-92- Structural Welding Code Reinforcing Steel

D Concrete Reinforcing Steel Institute (CRSI)

1 Placing Reinforcing Bars

1 02 SUBMITTALS

A Shop Drawings

1 Conform to ACI SP-66 showing bending diagrams; assembly diagrams, location diagrams, splicing and laps of bars, shapes, and dimensions, and details for bar reinforcing, stirrup spacing, accessories, and openings
2 Coordinate bar splicing and placement with CONTRACTOR'S concrete placing schedule and joint locations
3 Unless otherwise approved by ENGINEER, each submittal shall include all reinforcement for individual structures they pertain to

B Product Data

1 Dowel bar splicer system and reinforcing bar splicer laboratory reports and manufacturer's product data

C Mill Certifications

1 Submit for each lot of reinforcing bars used per ASTM A615 and A706

1 03 DELIVERY, STORAGE, AND HANDLING

A Store reinforcing steel on supports above ground, cover and keep clean

PART 2 PRODUCTS

2 01 MATERIALS

A Steel Reinforcing Bars

1 Deformed bars conforming to ASTM A615, Grade 60

B Smooth Dowels Plain bars conforming to ASTM A615, Grade 60

C Welded Wire Fabric (WWF) ASTM A185

1 Unless other size noted, whenever welded wire fabric is called for, it shall be 6 x 6 - W2 9 x W2 9
2 Provide welded wire fabric heavier than W2 9 in flat sheets

D Reinforcing Supports

1 Exterior exposed surfaces, surfaces in contact with earth or liquid, and interior exposed surfaces in humid areas shall have all plastic or stainless steel supports
2 Interior exposed surfaces in dry areas shall have all plastic, stainless steel, or plastic tipped steel supports

E Reinforcing Tension Bar Splicers

1 Manufacturers

a Cadweld or Lenton rebar splicers by Erico Products, Inc
b Dayton Barsplice, Inc
c Or equal

2 Develop minimum 125% of yield capacity of bars spliced in tension when tested as assembly in accordance with ASTM A370 and A615

F Dowel Bar Splicer Systems

1 Manufacturers·

a DB-SAE splicer system by Richmond Screw Anchor Company, Inc
b C2D rebar flange coupler by Williams Form Engineering Corporation
c Lenton Form Saver by Erico Products, Inc
d Or equal

2 Develop minimum 125% yield capacity of dowels when tested as assembly in accordance with ASTM A370 and A615

G Lap Splice Connection Systems

1 Manufacturers

a Systems Intersect by Dayton Superior
b Stabox by Rebar Coupler Box, Inc
c Or equal

2 Prefabricated plastic or metal boxes containing prefabricated, rebendable quality anchorage and lap splice reinforcement conforming to ACI 318 and ASTM 615 or A706

2 02 FABRICATION

A Fabricate to schedules and details on Drawings and in accordance with ACI 318

PART 3 EXECUTION

3 01 PLACEMENT

A Placement of reinforcing steel shall be approved by ENGINEER before covered with concrete

B Correct displacement of reinforcement prior to and during concrete pouring operations Maintain clear cover as noted on Drawings. Tolerances shall be in accordance with ACI 117 and ACI 318, unless noted otherwise

C Support reinforcing steel in accordance with CRSI "Placing Reinforcing Bars" with maximum spacing of 4ft-0 in

D Tie reinforcing steel at intersections in accordance with CRSI "Placing Reinforcing Bars "

1 Maximum Tie Spacing for Footings, Walls, and Columns Every third intersection or 3 ft-0 in
2 Maximum Spacing for Slabs and Other Work Every fourth intersection or 3 ft-0 in
3 Tie each dowel in-place

E Locate reinforcing to avoid interference with items drilled in later, such as concrete anchors

F Reinforcement shall be continuous through construction joints

G Reinforcement may be spliced at construction joints provided that the entire lap is placed within only 1 pour

H Extend welded wire fabric to within 2 in of edges of slab or section Lap sheets at least 12 in or 2-wire spaces, whichever is greater, at ends and edges and wire together Stagger end laps

I Unless shown otherwise on Drawings, place welded wire fabric between upper third point and mid-point of slab Welded wire fabric placement on subgrade and pulling up during concrete placement not allowed

J Use concrete brick for supporting bottom mat reinforcing on grade Use bolsters or chairs supported on concrete brick or tied to bottom mat for supporting upper reinforcing mat on grade Use bolsters or chairs for supporting reinforcing on mud slabs, metal deck, and forming

K Dowel bar splicer systems may be substituted for dowels at CONTRACTOR'S option when approved by ENGINEER

L Reinforcing bar splicers may be substituted for lapped splices at CONTRACTOR'S option when approved by ENGINEER Stagger splices

M Lap splice connection systems may be substituted for dowels at CONTRACTOR option when approved by ENGINEER

1 Use limited to non-stressed, redundant structurally non-critical areas, at wall-to-wall and/or wall-to-slab construction joints
2 Use limited to size Nos 3, 4, and 5 reinforcement bars
3 Reinforcement must be bent about preferred weak axis
4 Reinforcement shall be field straightened in accordance with manufacturer's written recommendations at temperature above 32°F
5 Reinforcement may be rebent only once
6 Key size and lap length shall be as detailed

N Do not field bend bars, including bars partially embedded in concrete unless indicated

O Do not place bars having kinks and bends other than shown on approved Shop Drawings

P Reinforcement shall be clean and free from loose mill scale, dirt, grease, oil, form release agent, dried concrete or any material reducing bond with concrete

END OF SECTION

SECTION 03300A
CAST-IN-PLACE CONCRETE

PART 1 GENERAL

1 01 REFERENCES

A American Concrete Institute (ACI)

1 SP-66-88- ACI Detailing Manual
2 117-90 - Standard Specification for Tolerances for Concrete Construction and Materials
3 304R-89- Guide for Measuring, Mixing, Transporting, and Placing Concrete
4 305R-91- Hot Weather Concreting
5 306R-88- Cold Weather Concreting
6 308-92 - Standard Plastic for Curing Concrete
7 318-92- Building Code Requirements for Reinforced Concrete
8 347R-89 - Formwork for Concrete

B American Society for Testing and Materials (ASTM)

1 A185 REV A-90 - Standard Specification for Steel Welded Wire Fabric, Plain, for Concrete Reinforcement
2 A615 REV A-92 - Standard Specification for Deformed and Plain Billet-Steel Bars for Concrete Reinforcement
3 C31-91 - Standard Practice for Making and Curing Concrete Test Specimens in the Field
4 C33-92 - Standard Specification for Concrete Aggregates
5 C39-86 - Standard Test Method for Compressive Strength of Cylindrical Concrete Specimens
6 C94-92 - Standard Specification for Ready-Mixed Concrete
7 C143 REV A-90 - Standard Test Method for Slump of Hydraulic Cement Concrete
8 C150-92 - Standard Specification for Portland Cement
9 C231 REV B-91 - Standard Test Method for Air Content of Freshly Mixed Concrete by the Pressure Method
10 C260-86 - Standard Specification for Air-Entraining Admixtures for Concrete
11 C309-91 - Standard Specification for Liquid Membrane-Forming Compounds for Curing Concrete
12 C494-92 - Standard Specification for Chemical Admixtures for Concrete
13 D1751-83 - Standard Specification for Preformed Expansion Joint Filler for Concrete Paving and Structural Construction (Non-extruding and Resilient Bituminous Types)
14 D1752-84 - Standard Specification for Preformed Sponge Rubber and Cork Expansion Joint Fillers for Concrete Paving and Structural Construction

C Concrete Reinforcing Steel Institute (CRSI)

1 Placing Reinforcing Bars

D Federal Specifications (FS)

1 UU-B-790A - Building Paper, Vegetable Fiber (Kraft, Waterproofed, Water Repellent, and Fire Resistant)

1 02 SUBMITTALS

A Shop Drawings

1 Reinforcing steel drawings conforming to ACI SP-66 showing bending diagrams, assembly diagrams, location diagrams, splicing and laps of bars, shapes, dimensions, and details for bar reinforcing and stirrup spacing, accessories, and openings
2 Construction Joints Sequence of placing concrete and location and details of joints, openings, and embedded items not shown on Drawings Submit at time of reinforcing submittals

B Product Data

1 Waterstop sample and manufacturer's literature
2 Miscellaneous materials manufacturer's literature

C Test Results

1 Provide with each load of concrete delivered, duplicate delivery tickets one for CONTRACTOR and one for ENGINEER with following information

a Date and serial number of ticket
b Name of ready mixed concrete plant, operator, and job location
c Type of cement, admixtures, if any, and brand name
d Cement content, in bags/cu yd of concrete, and mix design
e Truck number, time loaded, and name of dispatcher
f Amount of concrete in load, in cu yds, delivered
g Maximum size aggregate
h Gal of water added at job, if any, and slump of concrete after water was added
i Temperature of concrete at delivery
j Number of revolutions of mixer

D Miscellaneous Submittals

1 Statement by ready mix supplier giving source and material certificates, and proportions by weight of cement, fine and coarse aggregates, and admixtures

E Submit in accordance with Section 01300

1 03 QUALITY ASSURANCE

A Testing

1 Sampling and testing will be performed by independent testing laboratory in accordance with Section 01410
2 Perform slump tests (ASTM C143), air-entrainment tests (ASTM C231), and compressive strength tests (ASTM C31 and C39) daily for each class of concrete poured

B Tolerances

1 Conform to requirements of ACI 117
2 Concrete shall be within 3/16-in of 10-ft straightedge in all directions except where slabs are dished for drains Deviations from elevation indicated shall not exceed 3/4-in

1 04 PROJECT SITE CONDITIONS

A Hot Weather

1 Comply with ACI 305R
2 Concrete temperature shall not exceed 95°F
3 At air temperatures of 80°F or above, keep concrete as cool as possible during placement and curing Cool forms by water wash
4 When concrete temperatures exceed 80°F, water reducing, set retarding admixtures shall be used in accordance with manufacturer's recommendations

B Cold Weather

1 Comply with ACI 306R
2 Temperature of reinforcement, forms, fillers, and other materials in contact with concrete at time of placement shall not be less than 35°F Preheat if temperature is below 35°F
3 Maintain air and forms in contact with concrete sections having minimum dimension less than 12 in at temperature above 50°F for at least first 3 days and at temperature above 32°F for remainder of specified curing period
4 Maintain air and forms in contact with concrete in more massive sections at temperature above 40°F for at least first 3 days and at temperature above 32°F for remainder of specified curing period

PART 2 PRODUCT

2 01 MATERIALS

A Portland Cement

1 ASTM C150, Type I or II Except tricalcium aluminate (C_3A) content of Type I shall not exceed 12%
2 When aggregates determined to be deleteriously reactive, as defined by Appendix XI of ASTM C33, alkali content of cement defined by Table 1A of ASTM C150 shall not exceed 0 60%

B Aggregates

1 ASTM C33, free of foreign materials
2 Fine Aggregate Natural sand
3 Coarse Aggregate Crushed stone, crushed gravel or gravel Size 67 (3/4 in maximum)
4 Potential reactivity of aggregates shall be determined in accordance with Appendix XI of ASTM C33

C Admixtures for Concrete

1 Air-Entraining ASTM C260
2 Chemical Admixtures Optional, ASTM C494

a Water Reducing Type A
b Retarding Type B
c Water Reducing and Retarding Type D

D Water Potable

E Steel Reinforcing Bars

1 Deformed bars conforming to ASTM A615, grade 60

F Welded Wire Fabric ASTM A185

1 Unless other size noted, wherever welded wire fabric is called for it shall be 6 x 6-W2 9 x W2 9
2 Provide welded wire fabric, heavier than W2 9 in flat sheets

G Premolded Joint Filler Cork type, ASTM D1752 or bituminous type, ASTM D1751

H Waterstops

1 Virgin PVC meeting requirements of CRD C572
2 6 in wide by 3/8 in thick at center, flat corrugated, unless otherwise noted
3 Provide prefabricated tees, crosses, and other configurations as required Splice in accordance with manufacturer's written instructions

I Membrane Forming Curing Compound

1 Manufacturers

a Cure and Seal J-20 by Dayton Superior
b Dress and Seal 18 by L&M Construction Materials, Inc
c Kure-N-Seal by Sonneborn Building Products, Inc
d Floor Treet by Forrer Chemical Company
e Master Seal by Master Builders
f Euco Floor Coat by Euclid Chemical Company
g Cure & Seal by Symons
h Or equal

2 ASTM C309 and compatible with scheduled finishes and coatings

J Floor Sealer

1 Manufacturers

a Sika-Gard Cure/Hard, by Sika Corporation
b Kure-N-Seal by Sonneborn
c Cure & Seal by Symons
d Dress and Seal 18 by L&M Construction Materials, Inc
e Tuf-Seal J-35 by Dayton Superior
f Or equal

K Finishing Grout

1 Manufacturers·

a Thoroseal with Acryl 60, by Thoro
b Concrete Finisher with AKKRO-7T, by Tamms Industries Company
c Or equal

L Vapor Barrier Polyethylene film minimum 6 mils thick or coated reinforced kraft paper conforming to Fed Spec UU-B-790A, Type 1, Grade A, Style 4

M Epoxy Bonding Compound Joining new to existing concrete

1 Manufacturers

a Sikadur Hi-Mod by Sika Corporation
b Epoxtite 2362 by A C Horn
c Euco Epoxy 452mv or 620 by Euclid Chemical Company
d Fresh Concrete Bonder R649 by Rescon
e Or equal

N Non-Epoxy Bonding Compound Joining new to existing concrete where bonding compound cannot be placed immediately prior to pouring of new concrete

1 Manufacturers

a Weld-Crete, by Larsen Products Corporation
b Everbond by L&M Construction Materials, Inc
c Or equal

O Preformed Control Joint Strips

1 Manufacturers

a Kold-Seal Zip-Per Strip, by Kold-Seal Vinylex Corporation
b Stresslock, by H Compton Company
c Quick Strip, by Schlegel Corporation
d or equal

2 Plastic joint former with locking tabs
3 Depth shall be 1/4 of slab thickness

2.02 CONCRETE MIX DESIGN

A Concrete Mix Measure and combine cement, aggregates, water, and admixtures in accordance with ASTM C94

1 Class A

a Minimum Cement Content 6 bags/cu yd
b Minimum 28-Day Strength 4,000 psi
c Air Content 6%, ±1%
d Maximum Slump 4 in

2 Class B

a Minimum Cement Content 4-3/4 bags/cu yd.
b Minimum 28-Day Strength 3,000 psi
c Air Content 6%, ±1%
d Maximum Slump 4 in

B Concrete Usage

1 Class A Locations except where Class B specified
2 Class B Interior equipment bases, fence post piers, concrete or grout fillets in tanks, interior slabs reinforced with WWF, and where specifically stated

2 03 MIXING AND DELIVERY

A Furnish and deliver concrete in conformance with ASTM C94

B Deliver and complete discharge within 1-1/2 hrs of commencing mixing or before 300 revolutions of drum or blades, whichever comes first Includes revolutions required by transit mix trucks Limitations may be waived by ENGINEER if concrete is of such slump after 1-1/2 hrs or 300-revolution limit, it can be placed without addition of water

C Do not add water on job unless authorized by ENGINEER If water is added, additional mixing of 30 drum revolutions is required

PART 3 EXECUTION

3 01 SUBGRADE PREPARATION

A Subgrade and Bedding Compacted and free of frost If placement allowed at temperatures below freezing, provide temporary heat and protection as required to remove frost

B Provide mud slabs where necessary and when required by ENGINEER to obtain dry and stable working platform for placement of slabs on grade.

C Provide vapor barrier where noted on Drawings and overlap joints minimum of 6 in

D Where vapor barrier is not noted, at CONTRACTOR'S option, provide vapor barrier or soak subgrade evening before placement and sprinkle ahead of placement of concrete

E Remove standing water, ice, mud, and foreign matter before concrete is deposited

3 02 FORMS

A Workmanship Formwork shall prevent leakage of mortar Removal of wall ties shall leave holes clean cut and without appreciable spalling at face of concrete Conform to requirements of ACI 347R

B Materials

1 Unless specified otherwise, type of forms used is CONTRACTOR'S option CONTRACTOR may use metal, plywood, presswood form liners or plastic surfaced plywood
2 Use approved commercially manufactured devices for form ties Arrange ties so when forms are removed, no metal will be within 1 in of formed face of concrete

C Do not disturb forms until concrete adequately cured

D Form system design shall be CONTRACTOR'S responsibility

3 03 JOINTS

A Joints not shown on Drawings shall be subject to ENGINEER'S approval

B Clean and prime in accordance with manufacturer's instructions before applying sealant

C Control joints in slabs on grade shall consist of plastic strips set flush with finished surface or ¼ in wide joints cut with diamond saw within 12 hrs after pouring

1 Sawed control joint shall be 1/4 depth of slab, unless shown otherwise
2 Fill sawed control joints with epoxy joint filler
3 Cut alternating reinforcing bars on wires crossing joint

D Provide waterstop in construction joints where noted Secure in-place Place wire tie holes, if used, within 1 in of edge Vibrate concrete on both sides to ensure intimate contact between waterstop and concrete

3 04 REINFORCEMENT PLACEMENT

A Correct displacement of reinforcement prior to and during concrete pouring operations Maintain clear cover as noted on Drawings Tolerances shall be in accordance with ACI 318, unless noted otherwise

B Locate reinforcing to avoid interference with items drilled in later, such as concrete anchors

C Reinforcing steel shall be approved by ENGINEER before being covered with concrete

D Extend wire fabric to within 2 in of edges of slab or section Lap sheets at least 12 in or 2 wire spaces, whichever greater, at ends and edges and wire together Stagger end laps

E Do not field bend bars including bars partially embedded in concrete unless indicated or approved by ENGINEER

F Welding of reinforcing bars permitted only where indicated or as otherwise approved by ENGINEER

3 05 CONCRETE PLACEMENT

A Except as modified herein, ACI 304 – Chapter V, shall constitute requirements of this Specification

B Support reinforcing steel in accordance with CRSI "Placing Reinforcing Bars," with maximum spacing of 4 ft-0 in

C Tie reinforcing steel at intersections in accordance with CRSI "Placing Reinforcing Bars" Maximum spacing for footings, walls, and columns every third intersection or 3 ft-0 in Maximum spacing for slabs and other Work every fourth intersection or 3ft-0in Dowels shall be tied in-place

D Avoid damage to waterstop and reinforcing, and ensure accurate positioning after concrete placed

E Do not spread concrete with vibrators

F When placing of concrete is temporarily halted or delayed, provide construction joints as shown on Drawings or specified herein

G Place concrete with aid of internal mechanical vibrator equipment capable of 7,000 impulses/min Transmit vibration directly to concrete Duration of vibration at any location shall be necessary to produce thorough consolidation and to cause maximum amount of air bubbles to migrate to top of pour

H Set embedded items such as bolts, anchors, and piping in concrete as required by manufacturer of equipment used Verify location with equipment manufacturers

I Place items constructed of dissimilar metals to avoid physical contact with reinforcing Secure item and reinforcing to ensure they will not shift and come into contact during pouring Contact between reinforcing and other metal, other than bare, coated or plated carbon steel not permitted, unless approved by ENGINEER

3 06 SLAB FINISHES

A Interior slabs shall receive 3 trowelings Exterior slabs and walks shall receive 1 troweling and broom finish

1 Perform initial troweling by power or hand with trowel blade kept as flat as possible against concrete surface to prevent washboard or chatter effect
2 Perform second troweling by power if 3 trowelings specified, by hand if 2 trowelings specified
3 Perform third troweling by hand and continue until concrete consolidated to uniform, smooth, dense surface free of trowel marks and irregularities
4 Allow sufficient time between successive trowelings to allow concrete to become harder Perform each successive troweling with trowels progressively smaller and tipped more to increase compaction of concrete surface

B Broom Finished Broom at right angles to direction of traffic to give nonskid finish Use fine, soft bristled broom for stoops, ramps, and walks

C Floor Sealer Apply in accordance with manufacturer's written instructions, one coat when surface is hard enough to sustain foot traffic on same day as pour and second coat after Work completed and building ready for occupancy

3 07 FINISHING FORMED CONCRETE

A Ordinary Finish Finish resulting directly from formwork for surfaces which will be hidden from view by earth, submergence in water or sewage or subsequent construction

1 Patch honeycombing, stone pockets, form ties, spalls, and other irregularities
2 Where joint marks or fins on submerged surfaces exceed 1/4-in , grind smooth

B Smooth Finish. Interior concrete surfaces permanently exposed to view and concrete surfaces scheduled to be painted

1 Patch honeycombing, stone pockets, form ties, spalls, and other irregularities
2 Grind joint marks and fins smooth with adjacent wall surface Remove oil stains and rinse surface
3 After grinding and cleaning, dampen concrete and paint entire surface with cement grout Work cement grout into surface with cork or other suitable float When grout has set to where it will not be pulled out of holes or depressions, brush off with dry burlap or carpet flat
4 Prepare surfaces to be painted in accordance with Section 09900 and paint manufacturer's requirements

C Rubbed Finish Exterior concrete surfaces permanently exposed to view extending 6 in below grade and where indicated on Drawings

1 Patch honeycombing, stone pockets, form ties, spalls, and other irregularities
2 Grind joint marks and fins smooth with flat wall surface Remove oil stains and rinse surface
3 Apply heavy coat of finishing grout After first coat has set, apply finish coat When finish coat has set, float to uniform texture
4 Follow manufacturer's written instructions for finishing concrete
5 Finish Color Gray

3 08 PROTECTION AND CURING

A Protect concrete from frost and rapid drying, and keep moist for minimum curing period of 7 days after placing in accordance with ACI 308

B Wet cure or apply curing compound Do not use curing compound where other coating or topping will be applied

C Formed surfaces may be cured by leaving forms in-place Spray surface of forms left in-place during curing period as frequently as drying conditions may require to keep concrete surfaces moist For vertical surfaces, apply water to run down on inside of forms, if necessary to keep concrete wet

D Protect from damaging mechanical disturbances, particularly load stresses, heavy shock, and excessive vibration

E Protect finished concrete surfaces from damage caused by construction equipment, materials or methods, and rain or running water

F Do not load self-supporting structures as to overstress concrete

END OF SECTION

ITEM 16010

GENERAL ELECTRICAL PROVISIONS

I GENERAL

A Description

Furnish all labor, materials and services necessary for the construction, installation, testing, and adjustment of all circuits and electrical equipment specified herein, shown or noted on the Plans and/or Exhibits.

B. Quality Assurance

All work and materials shall conform to the applicable current standards of the National Electrical Code (NEC), National Electric Safety Code (NESC), Institute of Electrical and Electronic Engineers (IEEE), National Electrical Manufacturer's Association (NEMA), American National Standards Institute (ANSI), Insulated Power Cable Engineers Association (IPCEA), State and local electrical codes, and other specifically cited standards All materials unless otherwise approved by local government authorities shall bear the label of, or be listed by, the Underwriters' Laboratory, Inc., (UL). Where conflicts exist between any of the above standards, the standard which is most stringent shall take precedence. Where the contract documents exceed minimum requirements, the contract documents take precedence.

Observe where applicable the prevailing rules and requirements of the National Fire Protection Association (NFPA), the state and local fire marshals' regulations, and standards pertaining to adequate protection and/or guarding of any moving parts or otherwise hazardous conditions

Resolve at the Contractor's expense all conflicts with applicable regulations Prepare and submit to the Engineer and inspection authorities additional clarifying details including substitute methods and materials as needed to secure the required approval and resolve conflicts.

C. Plans and/or Exhibits

For clarity and legibility, the electrical layouts are essentially diagrammatic, and, although the size and location of equipment is shown wherever possible, make use

of all the data in all the contract documents and finally verify this information against actual field conditions As applicable to the work to be performed, the materials and installation shall conform to the available space, avoid obstructions, preserve headroom, maintain required accessibility, and satisfy the requirements of the governing codes and the standards of good practice

Electrical Plans and/or Exhibits and layouts are in accordance with the requirements of one manufacturer. Modify, subject to the Engineer's approval, at the Contractor's expense, wiring and location as necessary to meet the requirements of the particular manufacturer's equipment which is installed

D. Guarantee

In addition to the specific warranties called for under the requirements of the General and Special Provisions, obtain evidence of extended period guarantees or warranties for factory assembled equipment and devices on which the manufacturers furnish standard published guarantees as regular trade practice and deliver same to the Owner.

Nothing in this paragraph shall require the Contractor's performance bond to be for a period other than specified in the General and Special Provisions.

E. Submittals

Six sets of shop drawings shall be submitted on all items of electrical equipment specified herein or shown on the Plans and/or Exhibits in accordance with the General Provisions of this contract.

F. Tests

Perform the tests as outlined hereinafter and other tests necessary to establish the adequacy, quality, safety, completed status, and suitable operation of each system. Give the Engineer timely advance notification of all tests scheduled so that tests may be witnessed. Completion of all tests and submittal of written results for approval of the Engineer are conditions of acceptance Furnish all necessary test instruments Submit all required reports in duplicate

1 Ground Rod Tests. Driven ground rods shall be tested individually and the combined resistance of all rods in a group shall not exceed 15 ohms at the main point of connection. Submit the results, date of test, and soil conditions to the Engineer in writing immediately after testing. Ground rod tests shall not be made within 48 hours after rainfall

2 Final Test· Start final tests after complete preliminary tests have been made which indicate adequacy, quality, completion, performance, and satisfactory operation System performance shall conform to the following criteria. Deviations, if any, shall be noted on the test reports with indication of corrective action taken or proposed.

a Plus or minus two percent maximum variation between nominal system voltage and average system voltage

b. Plus or minus five percent maximum variation from nominal system voltage for all load conditions.

c Actual motor current on each ungrounded conductor at prevailing conditions equal to or less than nameplate rated full load motor current at a service factor of 1.0.

d. One percent maximum total voltage unbalance at full load defined as 100 times the sum of the deviation of the three voltages from the average without regard to sign, divided by twice the average voltage. (Balance system loads and cooperate with the serving utility company to achieve a balanced condition which is within the indicated limits)

e Plus or minus ten percent maximum variation between average phase current and individual phase current (Balance system loads to achieve a balanced condition which is within the indicated limits)

f Installation resistance shall have conductor insulation resistance as installed of not less than 1,000 ohms to ground, except circuits rated over 50 amps and with all served devices connected (such as switchboards, panelboards, and similar) may have a resistance to ground of not less than 300,000 ohms.

C. Test Reports

Submit dated "Electrical System Test Reports" indicating all tests performed and demonstrating conformance with the required system performance criteria This test report shall include all voltage, current and resistance test data of the electrical service, main feeders, panelboards, switchboards, power transformers, and ground systems as applicable

II MATERIALS

Furnish new materials unless otherwise noted. Furnish materials which are the standard product of manufacturers regularly engaged in the production of such equipment Material of the same type or classification and used for the same purpose shall be of the same manufacturer. Materials shall be labeled or listed by approved testing laboratories, approved by inspection authorities, and related by the manufacturer as suitable for the intended application.

III EXECUTION

Install equipment and materials in a neat and workmanlike manner and align, level, and adjust for satisfactory operation. Install equipment so that all parts are easily accessible for inspection, operation, maintenance, and repair.

Std 8/8/88
Revised 10/1/02

ITEM 16020

ELECTRICAL
BASIC MATERIALS AND METHODS

I GENERAL

This specification includes furnishing of all equipment and materials and the performance of all operations required to complete the electrical power and control systems as shown on the Plans and/or Exhibits and herein specified The work shall include but not be limited to the following

A The Contractor shall make all electrical connections required for equipment indicated to be provided by equipment manufacturers or others, and/or equipment provided under other sections of these specifications

B The Contractor shall provide all temporary electrical wiring for tools and lights as required and shall remove same on completion of the work

C The Contractor shall make all arrangements with the local power company for providing electrical service at the site and shall coordinate his work with them to insure that his proposal shall include everything required to afford the necessary electrical service and metering facilities

D Work shall be carefully coordinated with work of other trades indicated on the Plans and/or Exhibits Wherever work covered under other sections of these specifications is contiguous to work covered by this section, order of work shall be carefully scheduled and coordinated to secure completion of the various portions of the work in the best possible manner Rights of various interests and order of the work, when in dispute, shall be established by the Engineer and his instructions as to priority of work and correction of interferences shall be final and binding

E All work, materials, and equipment shall comply with latest rules, regulations, and standards of the following

1 National Electrical Code (NEC)

2 National Electrical Safety Code (NESC)

3 Underwriters' Laboratory (UL)

4 American National Standards Institute (ANSI)

5 National Electrical Manufacturers Association (NEMA)

6 National Fire Protection Association (NFPA)

7 Occupational Safety and Health Administration (OSHA)

8 Institute of Electrical and Electronic Engineers (IEEE)

F The Plans and/or Exhibits and specifications are intended to comply with all the aforementioned codes, regulations, and standards Where discrepancies occur, Contractor shall immediately notify the Engineer in writing of these discrepancies and ask for an interpretation Should materials or workmanship that do not comply with the applicable codes, regulations, and standards be installed, the Contractor will be responsible for correcting the improper installation

G Obtain Certificates of Inspection and all other permits as a part of the work

II MATERIALS

A *General*

1 All materials shall be new and the standard product of manufacturers regularly engaged in the production of such equipment All materials shall conform to the National Electrical Code Where Underwriters' Laboratories tests products and issues labels, products shall be UL approved and listed, and shall be labeled

2. Whenever a definite material is specified, it is not the intention to discriminate against any equal product made by another manufacturer, which, in the opinion of the Engineer, will perform the same function equally as well as the material specified Under no circumstances, however, shall any substitution be made for the specified material without the written consent of the Engineer

B Conduit

1 Unless otherwise noted, all wiring shall be installed in rigid steel conduit of the proper size to contain the number of conductors required in accordance with the latest edition of the National Electrical Code (NEC) Where conduit sizes shown on the Plans and/or Exhibits are larger than those required by NEC, the larger size conduit shall be provided To

provide adequate corrosion resistance, all conduits shall be hot dip galvanized rigid steel Forming, threading, and other installation techniques shall conform to the manufacturer's recommendations, and shall minimize damage to the protective coating In areas of high chlorine concentrations, chlorinator and chlorine storage rooms, Schedule 40 PVC conduit shall be used All joints shall be solvent welded type Due to the high thermal expansion characteristics of this conduit, the Contractor shall provide expansion joint fittings as recommended by the manufacturer to cover a temperature range of 20° F to 120° F

2 Conduit runs shall be direct, with bends as long as possible Conduit placed underground shall be installed a minimum of 24" below grade and shall be encased by a layer of red concrete at least 3" on each side of the conduits Exposed conduits shall be run parallel or perpendicular to the building lines

3 Conduits shall be securely fastened to the structure as required with galvanized malleable iron one-hole pipe straps, or other approved clamps, using bolts, screws, expansion bolts, and toggle bolts as required for the purpose Fasteners shall be spaced not more than 5-feet apart

4 Flexible metallic conduit having a PVC jacket shall be used for connection at motor terminals of all motors Where flexible conduit is used, the grounding system shall be made continuous by a manufacturer installed, UL approved, copper grounding strap, or by bonding jumpers sized in accordance with NEC Table 250-95

5 No Electrical Metallic Tubing (EMT) will be permitted

6 Acceptable Manufacturers

a Rigid Steel Conduit Acceptable manufacturers of rigid steel conduit are Allied Tube and Conduit, Triangle Wire and Cable, Inc., Wheatland Tube Company, or approved equal

b Rigid-Non-Metallic Conduit Acceptable manufacturers of rigid non-metallic (PVC) conduit are Cantex, Carlon Industries, Inc , Robroy Industries, Inc , or approved equal

c Liquidtight Flexible Conduit Acceptable manufacturers of liquidtight flexible conduit (Sealtite) are Anamet, Inc , Electriflex Company, Triangle Wire and Cable, Inc , or approved equal

C Power and Control Wire and Cable

1 All wire and cable shall be in strict accordance with Underwriter's Laboratories Standards Listing and ASTM B3 and ASTM B8 and shall bear its stamp of approved size, type, and voltage rating

2 All wire shall be copper conductor, 600 volt, type XHHW (cross-linked polyethylene) insulation, unless otherwise noted on the contract Plans and/or Exhibits All wire shall be stranded, except that Contractor may use solid conductor wire for branch lighting circuits

3 No wire shall be drawn into a conduit until the entire conduit run is complete Contractor may use a UL approved wire pulling lubricant where appropriate

4 No wire shall be smaller than No 14 AWG, except certain instrumentation circuits as noted on the contract Plans and/or Exhibits Control wiring only shall be No 14 AWG Power circuit conductors shall not be smaller than No 12 AWG Lighting circuit conductors shall be No 12 AWG, unless the one-way distance from the farthest outlet to the panelboard is greater than 100 feet, in which case 10 AWG shall be used

5 Acceptable manufacturers of wire and cable for power and control are Okonite Company, Houston Wire and Cable, Carol Cable Company, Triangle Wire and Cable, Southwire Corporation, or approved equal

D Telephone Conductors

1 Outer jacket shall be black, low density, high molecular weight polyethylene (HMWPE)

2 Shield shall be a single corrugated 5 mil copper shield (copper alloy no. 194) Shield shall be flooded with envirobloc compound

3 Core covering shall consist of a non-hygroscopic wrap with a coating of water Bloc II compound

4 Cable assembly shall consist of twisted pairs to minimize resistance unbalance and cross talk Entire cable assembly shall be completely flooded with water Bloc II compound All air spaces between insulated conductors shall be filled

5 Cable Specification

Conductor 6 Pair

Wire Size	No 14 AWG
DC Resistance	89 1 ohm/mi
Resistance	1.5 ohm/mi
Unbalance	4 ohm/mi
Maximum Capacitance	800 pF/1000 Ft
Unbalance (pair to ground @ 1 KHz)	(6 or more pairs)
Dielectric Strength @ 0 3 Sec	
Conductor to Conductor	5,000 VDC
Conductor to Shield	15,000 VDC
Conductor Insulation Resistance	1000 Megaohm/mi
Cross talk loss far end @ 150 KHz	73 dB/1000 Ft
Cross talk loss near end @ 772 KHz	81 M-O-dB non-adjacent units

6 The Latest Edition of Standard REA-PE-39 shall be applicable

7 Acceptable Manufacturers are Superior Cable, Anaconda, Belden, Phelps Dodge or approved equal

E Telephone Yard Pedestals

1 Contractor shall provide metal telephone distribution enclosures constructed of heavy gauge galvanized steel as required.

2 Contractor shall provide accessories as follows 42" galvanized stake with protective paint coating, tamper resistant enclosure lock, terminating splice connector blocks, wire markers, and dust covers as required

3 Telephone yard pedestals shall be manufactured by Edson or approved equal

F Shielded Instrumentation Cable

1 Single instrumentation pairs or triads shall be tinned copper, No 16 AWG stranded conductors twisted with aluminum-polyester shield, stranded, tinned No 20 AWG copper drain wire, and overall chrome vinyl jacket Instrumentation cables shall be rated for 300 V, minimum

2 Multipair shielded cables shall be tinned copper, No 16 AWG, 7 strand insulated conductors, twisted in pairs with aluminum-mylar shield over each pair, silicone rubber fiberglass fire barrier tape, tinned copper drain wire, aluminum-mylar overall shield, and nylon outer jacket

3 Acceptable manufacturers of instrumentation cable are Belden, Okonite Houston Wire & Cable, or approved equal

G Lugs and Connectors All conductors other than conductors used for branch lighting circuits shall be equipped with compression type spade or hole lugs as required Lugs shall be as manufactured by Thomas & Betts, Burndy, or approved equivalent A-1 lugs must be installed as directed by the manufacturer using an approved compression tool Wire nuts as manufactured by 3-M, Buchanan, or equivalent shall be used on lighting conductors

H Condulets, Outlet, and Junction Boxes All condulets, outlet boxes, and junction boxes shall be cast metal weather-proof type with screw-fastened covers, except those used with the PVC conduit system which shall be molded, solid PVC type All metallic fittings shall be of high quality specification grade, cast iron with hot dip galvanized protective coating No die cast aluminum or aluminum alloy fittings will be acceptable Acceptable manufacturers are Appleton Electric, Crouse-Hinds, O-Z/Gedney or approved equal

I Lighting Fixtures and Lamps Lighting fixtures and lamps shall be as indicated on the Plans and/or Exhibits Fixtures shall be completely wired and ready for operation with lamps installed All fixtures shall be in first class condition and the Contractor shall be responsible for fixtures until completion and final acceptance of the job Lamps of the type indicated on the Plans and/or Exhibits shall be provided

J Grounding

1 Grounding of the main service and each item of equipment shall be provided in accordance with the requirements of the National Electrical Code, Article 250

2 System ground shall be as indicated on the contract Plans and/or Exhibits

3 Equipment ground may be by means of the metallic raceway system, provided proper care is exercised to assure electrical continuity of the entire raceway system No grounding to any water lines will be permitted

K Pull Boxes Boxes shall be electro-galvanized sheet steel for in floor locations and cast iron as specified under fittings for use outdoors and in wet locations

L Control Stations

1 All devices shall be industrial, heavy duty, oiltight construction with clearly marked legend plates

2 Lock stop stations shall be of the single toggle switch type

3 Pushbuttons shall be of the momentary type (unless otherwise noted)

4 Selector switches shall be of the rotary type with round or oval handles and positioning device to securely hold switch in selected position

5 Indicating lights shall be LED type Lenses shall be colored as follows red for running, green for stopped or ready, and amber for failure

6 Enclosures shall be NEMA 12 for dry indoor non-hazardous locations, NEMA 7 for hazardous locations, and MEMA 4X for outdoor and damp wet, or corrosive indoor locations

7 Nameplates shall identify equipment controlled

8 Products shall be as manufactured by Cutler-Hammer/Westinghouse Allen-Bradley, Square D, General Electric, Siemens (Furnas) or approved equal

M Lighting Panels

1 Lighting panels shall be provided with bolted type circuit breakers Capacity and interrupting rating shall be as shown on the contract Plans and/or Exhibits Panelboards shall be constructed in accordance with all NEMA and UL requirements and shall be UL listed and so labeled

2 Acceptable manufacturers are Square D, General Electric, Cutler-Hammer/Westinghouse, Siemens, or approved equal

N Wiring Devices (Light Switches and Receptacles)

1 All light switches shall be rated 15 A, 120-277 V Single pole switches shall be equivalent to Pass & Seymour Cat #15AC1-I Three way switches shall be equivalent to Pass & Seymour Cat #15AC3-I

2 Receptacles shall be Pass & Seymour Cat #5262-I or approved equal grounding type duplex receptacles rated 15 A, 125 V unless otherwise noted on the contract Plans and/or Exhibits Ground fault interrupting

receptacles (denoted on the contract Plans and/or Exhibits) shall be equivalent to Pass & Seymour Cat #1591-R-I

3 Wiring devices shall be ivory colored All switches shall be surface mounted in an FS conduit box, unless otherwise shown on the contract Plans and/or Exhibits All device covers shall be either cast iron or stainless steel Weatherproof wiring devices shall have appropriate spring-type covers

O Lighting Transformers

1 Transformers shall have two 5% full capacity below normal voltage (FCBN) taps

2 Temperature rise of transformers shall not exceed 115° C

3 Acceptable manufacturers are Cutler-Hammer/Westinghouse, General Electric, Square D, or approved equal

P Manual Motor Starters

1 Manual motor starters shall be toggle operated, horsepower rated with thermal overload protection

2 Enclosures shall be NEMA 12 for dry, indoor locations and NEMA 4X for outdoor and damp, wet, or corrosive indoor locations Equipment shall be suitable for use in Class I, Division 1 or 2 Group D hazardous locations where so noted on the contract Plans and/or Exhibits

3 Manual motor starters shall have a nameplate identifying the equipment controlled

4 Acceptable manufacturers are Cutler-Hammer/Westinghouse, General Electric, Square D, Siemens (Furnas), or approved equal

Q Magnetic Motor Starters

1 Magnetic motor starters shall be coil operated, standard NEMA sizes, horsepower rated, with ambient-compensated, thermal overload protection properly sized for the motor to be controlled

2 Combination starters shall be provided with magnetic trip only motor circuit protector

3 Enclosures shall be NEMA 12 for dry, indoor locations and NEMA 4X for

outdoor and damp, wet, or corrosive indoor locations Equipment shall be suitable for use in Class I, Division 1 or 2 Group D hazardous locations where so noted on the contract Plans and/or Exhibits

4 Starters shall be full voltage, non-reversing (FVNR) unless otherwise noted on the contract Plans and/or Exhibits

5 Accessories shall include a control power transformer fused and grounded on low voltage side for each starter so designated on the contract Plans and/or Exhibits, auxiliary contacts for motor space heaters, remote status signals and interlocks as shown on the contract Plans and/or Exhibits

6 Starters shall have a nameplate identifying the equipment controlled

7 Acceptable Manufacturers are Square D, Cutler-Hammer/Westinghouse, General Electric, Siemens (Furnas), or approved equal

R Disconnect Switches

1 Disconnect switches shall be general purpose, heavy-duty, with visible blades and safety handle

2 Enclosures shall be NEMA 12 for dry indoor use, and NEMA 4X for outdoor and damp, wet, or corrosive indoor use

III EXECUTION

A Conduit

1 Rigid Steel - Above Ground

a Installation practices shall conform to AISI Handbook "Steel Electrical Raceways "

b Sleeves through footings for exterior runs shall be "OZ" Series FSK, WSK, Gandy W, 3M, or equivalent

c Exposed raceways shall be installed parallel or perpendicular to walls, structural members of intersections, or vertical planes and ceilings

d Screw clamp backs shall be used with conduits run on walls or ceilings

e Place an approved (O-Z, Crouse-Hinds, Appleton, or equivalent)

expansion fitting and bonding jumper where conduits cross building expansion joints

2 PVC Conduit - Above Ground Where specifically shown on the contract Plans and/or Exhibits, and always in chlorine rooms, use Schedule 40 PVC heavy-walled conduit installed in accordance with manufacturer's recommendations

3 Conduits - Below Ground

a All ductbanks shall be encased in Class B concrete, minimum 24" cover, 2" between conduits, 3" clearance to outside of envelope Concrete shall be red and poured or upper 3" to have red dye sprinkled in mixture during pour and on top to assure red coloring

b Ductbanks shall be reinforced with one No 3 reinforcing rod for ductbanks containing fewer than three conduits, or two No 3 reinforcing rods for ductbanks containing four or more conduits

c Contractor shall grade conduits to pull boxes or manholes

d Contractor shall draw clearing mandrel and rag through conduits to clear conduit of debris and obstructions prior to installing conductors

B Wire and Cable

1 Branch conduit grounding conductors in conduit shall be insulated with green colored insulation unless otherwise noted

2 Color coding shall be in accordance with the Owner's requirements

3 Connections to equipment (except motor terminals) shall be made with pressure connectors Compression lugs shall be used at motor terminals Compression sleeves shall be used for splices of No 8 AWG and larger Electrical spring connectors (Scotchlock or 3M) shall be used for connections and wire joints in lighting and receptacle outlet boxes, and control junction boxes with terminal strips

All splices, joints, and free ends of conductors shall be covered with insulation equivalent to that of conductors or with insulating device suitable for the purpose

C Lighting Panels and Disconnect Switches

1 Top of operating handle shall not exceed 6'-6" above finished floor

2 Contractor shall provide a typed circuit directory and affix same to the lighting panel such that it may not be unintentionally dislodged

D Control Stations, Manual Starters, Magnetic Starters, Lighting Transformers

1 Devices shall be mounted such that sufficient access and working space is provided for safe operation and maintenance In no case shall working space be less than required by the National Electrical Code

2 Enclosures shall be securely fastened to walls or other mounting surfaces Contractor shall provide galvanized steel supports to rigidly support equipment at locations shown on the contract Plans and/or Exhibits if local wall support is not available

3 Installation shall be in accordance with the National Electrical Code

E Wiring Devices (Receptacles and Light Switches)

1 Contractor shall install receptacles with ground pole in up position

2 Receptacles shall be mounted 18" above finished floor in non-hazardous locations and 4'-6" above finished floor in hazardous locations unless otherwise noted on the contract Plans and/or Exhibits

3. Light switches shall be mounted 4'-6" above finished floor unless otherwise noted on the contract Plans and/or Exhibits

4 Installation shall be in accordance with National Electrical Code

IV QUALITY ASSURANCE

A Shop Drawings

1 Contractor shall furnish tabulated data for all products to be installed

2 Contractor shall furnish catalog data cuts indicating exact models of equipment to be furnished, including the following

a Disconnect Switches

b Boxes

c Fuses

d Lighting Panelboards
e Lighting Poles, Fixtures and Ballasts

f Motor Starters

g Motor Control Centers

h Control Devices

i Automatic Controls (Complete Schematics)

j Wire and Cable

k Conduit and Raceways

l Wiring Devices

m Transformers

n Circuit Breakers

B Operation and Maintenance Instruction Manual Contractor shall collect and submit in 3-ring folders (9" x 12") seven (7) sets of product data, shop drawings, wiring diagrams, instruction and parts lists for operating and maintaining equipment and systems installed as electrical work. Contractor shall include in the instructions a description of normal adjustments and a list of items to be lubricated specifying the type and frequency of lubrication required For the Owner's use, Contractor shall provide special servicing tools required for this equipment Contractor shall deliver manuals and tools to the Engineer as a condition of final acceptance

C Tests

1 All equipment shall be put into service under normal conditions, collectively and separately, as may be necessary to determine satisfactory operation The test shall be performed in the presence of the Engineer Contractor shall furnish all instruments and personnel required for test Equipment shall be demonstrated to operate in accordance with the requirements of this specification

2 Date for final acceptance test shall be sufficiently in advance of

completion date of contract to permit any adjustment or alterations indicated by final acceptance tests to be necessary for proper functioning of the equipment, to be completed within the number of days allotted for completion of the contract Retests shall be conducted by the Engineer of such time duration as may be necessary to assure proper functioning of adjusted or altered parts of items of equipment No resultant delay or consumption of time as a result of such necessary retests beyond completion date of contract shall relieve the Contractor of his responsibility under the contract

3 Each electrical circuit shall be tested after permanent cables are in place to demonstrate that the circuit and connected equipment perform satisfactorily and that they are free from improper grounds and short circuits

4 Individually test 600 volt cables for insulation resistance between phases and from each phase to ground

a. Contractor shall test after cables are installed and before they are put in service in accordance with the following procedures and requirements

1) Step 1 Measure the insulation resistance at 500 VDC with a "megger" insulation testing instrument

2) Step 2 To the same connection points as in Step 1, apply an a c potential of 2X rated + 1000 V rms or 1500 V rms, whichever is greater Increases and decreases of application shall be uniform and not greater than 250 V/sec If any leakage greater than 3 mA and/or insulation breakdown occurs, it shall be visually indicated.

3) Step 3 To the same connection points as in Step 1 and Step 2 the insulation resistance shall again be measured at 500 VDC with the "megger" insulation testing instrument

b Test instruments are to be provided by the Contractor

5 If insulation breakdown and/or leakage in excess of 3 mA occurred in any circuit during the Hipot test and/or if any insulation resistance measured less than 50 MOHM in either Step 1 or Step 3, corrective action must be taken and tests repeated until the insulation is satisfactory to the Engineer Corrective action and repeated tests shall be accomplished at Contractor's own expense

6 Contractor shall maintain a written record of circuits being tested, marking down circuit number or descriptive function and results of each step in the test procedures including repeated tests Contractor shall submit copies of written records within 10 days after tests are performed

7 Electrical panels, equipment and devices need not be subjected to the high voltage insulation tests twice Therefore, panels, equipment and devices that have been previously subjected to these tests shall be isolated from the electrical distribution system while the insulation tests are performed, provided that a certified test report dated less than six months prior to installation is submitted to the Engineer

8 Any cable which fails the insulation tests or which fails when tested under full load conditions shall be replaced with a new cable for the full length of the circuit

CABLE TEST DATA - HIGH VOLTAGE OM 92

Project and Location							Date
Circuit Designation							Project Number
Factory Test Voltage D C _____ A C				Field Test Voltage D C _____ A C			
CABLE	Size	Length	Feet	Operating KV			
Grounded	Ungrounded	Rated KV	Insul Wall Th	Insul Type	Jacket Th	Jacket Type	
Shield (Type)				Cable Manufacturer			
Temperature	Humidity			Termination (Type)			
Type Splice & Locations							

Megger Data Mecomms Before Hi-Pot Test				Hi-Pot Test Data Current (Micro AMP)		Megger Data Mecomms After Hi-Pot Test						
	Phase				% Test KV	Phase			Phase			
	1	2	3			1	2	3	1	2	3	
15 Sec				0 Sec	20							15 Sec
30 Sec				15 Sec	40							30 Sec
45 Sec				30 Sec	60							45 Sec
1 Min				45 Sec	80							1 Min
15 Sec				60 Sec	100							15 Sec
30 Sec				After 100% Volt 1 Min	100							30 Sec
45 Sec				2 Min	100							45 Sec
2 Min				3 Min	100							2 Min
15 Sec				4 Min	100							15 Sec
30 Sec				5 Min	100*							30 Sec
45 Sec				6 Min	100							45 Sec
3 Min				7 Min	100							3 Min
4 Min				8 Min	100							4 Min
5 Min				9 Min	100							5 Min
Test Performed By			Date	10 Min	100							
				11 Min	100				* End A C Test at 5 Minutes			
Test Performed By				12 Min	100				after 100% A C Test Voltage			
Name	Representing		Date	13 Min	100				has been Applied			
				14 Min	100							
				15 min	100							

16020 *** 15/15

ITEM 16046

AUTOMATIC TRANSFER SWITCH

PART I GENERAL

The automatic transfer switch shall be the product of a manufacturer who shall also be the manufacturer of all the major components in the motor control center and shall bear the UL label where standards have been established by that agency The transfer switch and additions shall conform with arrangement, one-line diagrams and schematics as may be detailed on the Plans and/or Exhibits or specified herein and shall be as manufactured by ASCO, Zenith, Russelectric or approved equal

PART II MATERIALS

2.1 Transfer Switch shall be electrically operated automatic type.

2 2 Ratings: The transfer switch shall be 100% equipment rated for continuous duty as shown on the Plans and/or Exhibits and shall conform to the applicable requirements of UL 1008 for emergency total system load Transfer switch supplied shall bear the UL label Three Phase, three wire transfer switch used with ground fault equipment shall be the true three pole switched neutral type with all four poles for each source being fully rated and mounted on a common shaft Add-on, bolt-on or overlapping neutrals are not acceptable for 3 pole applications

2.3 The transfer switch shall be rated for non-welding of contacts with the available fault current specified herein

2 4 Transfer switch shall be UL 1008 listed and rated for operation at all voltage up to and including 600 vac

2 5 Automatic transfer switch (ATS) shall be furnished as shown on the drawings, voltage and continuous current ratings and number of poles shall be as shown

2 6 The delayed transition ATS shall be furnished as shown on the drawings; voltage and continuous current ratings and number of poles shall be as shown, switches shall be UL listed in accordance with UL-1008

2 7 On 3-phase, 4-wire systems, utilizing ground fault protection, a true 4-pole switch shall be supplied with all four poles mounted on a common shaft; the continuous current rating and the closing and withstand rating of the fourth pole shall be

identical to the rating of the main poles

2 8 The transfer switch shall be free standing in NEMA 4X SS enclosure mounted wall adjacent to the generator, unless otherwise indicated; the enclosure shall be sized to exceed minimum wire bending space required by UL 1008

2 9 The transfer switch shall be equipped with an internal welded steel pocket, housing an operations and maintenance manual

2 10 The transfer switch shall be top and bottom accessible

2 11 The main contacts shall be capable of being replaced without removing the main power cables.

2 12 The main contacts shall be visible for inspection without any major disassembly of the transfer switch.

2 13 All bolted bus connections shall have Belleville compression type washers

2 14 When a solid neutral is required, a fully rated bus bar with required AL-CU neutral hugs shall be provided

2 15 Control components and wiring shall be front accessible, all control wires shall be multiconductor 18-gauge, 600 volt, SIS switchboard-type, point-to-point harness, all control wire terminations shall be identified with tubular sleeve-type markers

2 16 The switch shall be equipped with 90 degrees C-rated copper/aluminum solderless mechanical-type lugs

2 17 The complete transfer switch assembly shall be factory tested to ensure proper operation and compliance with the specification requirements, a copy of the factory test report shall be available upon request.

2 18 Transfer time shall be of sufficient duration to allow motor run controls to drop out or Contractor shall provide additional time delay controls to accomplish that function

2 19 Generator remote annunciator panel to be installed in automatic transfer switch door

2 20 The transfer switch shall be double throw, actuated by two electric operators momentarily energized, and connected to the transfer mechanism by a simple over center type linkage; minimum transfer time shall be 400 milliseconds

2 21 The normal and emergency contacts shall be interlocked electrically to prevent simultaneous closing, main contacts shall be mechanically locked in both the normal

and emergency positions without the use of hooks, latches, magnets, or springs, and shall be silver-tungsten alloy; separate acing contacts with magnetic blowouts shall be provided on all transfer switches; interlocked, molded case circuit breakers or contactors are not acceptable unless shown on PLANS

2.22 The transfer switch shall be equipped with a safe external manual operator, designed to prevent injury to operating personnel; the manual operator shall be front accessible and shall provide "quick make-quick break" operation, offering the same contact-to-contact transfer speed as the electrical operator to prevent switching the main contacts slowly; the external manual operator shall be UL listed for operation, under load, from the outside of the transfer switch while the door is closed

2 23 Automatic Transfer Switch Controls

A The transfer switch shall be equipped with a microprocessor based on control system, to provide all the operational functions of the automatic transfer switch, the controller shall have two asynchronous serial ports; the controller shall have a real time clock with Nicad battery back-up

B The CPU shall be equipped with self-diagnostics which perform periodic checks of the memory I/O and communication circuits, with a watchdog/power fail circuit

C The controller shall use industry standard open architecture communication protocol for high speed serial communications via multi-drop connection to other controllers and to a master terminal with up to 4000 ft of cable, or further, with the addition of a communication repeater, the serial communication port shall be RS422/485 compatible

D. The serial communication port shall allow interface to either the manufacturer's or the owner's furnished remote supervisory control

E The controller shall have password protection required to limit access to qualified and authorized personnel

F The controller shall include a 20-character, LCD display, with a keypad, which allows access to the system.

G The controller shall include three-phase over/under voltage, over/under frequency, phase sequence detection mad phase differential monitoring on both normal and emergency sources

H The controller shall be capable of storing the following records in memory for access either locally or remotely

1 Number of hours transfer switch is in the emergency position (total since record reset)

2 Number of hours emergency power is available (total since record reset)

3. Total transfer in either direction (total since record reset)

4 Date, time, and description of the last four source failures

5 Date of the last exercise period

6 Date of record reset

2 24 Sequence of Operation

A When the voltage on any phase of the normal source drops below 80% or increases to 120%, or frequency drops below 90%, or increase to 110%, or 20% voltage differential between phases occurs, after a programmable time delay period of 0-9999 seconds factory set at 3 seconds to allow for momentary dips, the engine starting contacts shall close to start the generating plant

B The transfer switch shall transfer to emergency (standby power) when the generating plant has reached specified voltage and frequency on all phases

C After restoration of normal power on all phases to a preset value of at least 90% to 110% of rated voltage, and at least 95% to 105% of rated frequency, and voltage differential is below 20%, an adjustable time delay period of 0-9999 seconds (factory set at 300 seconds) shall delay retransfer to allow stabilization of normal power. If the emergency power source should fail during this time delay period, the switch shall automatically return to the normal source

D After retransfer to normal, the engine generator shall be allowed to operate at no load for a programmable period of 0-9999 seconds, factory set at 300 seconds

2 25 Automatic Transfer Switch Accessories

A Programmable three-phase sensing of the normal source set to pickup at 90% and dropout at 80% rated voltage and over-voltage to pickup at 120% and dropout out at 110% of rated voltage Programmable frequency pickup at 95% and dropout at 90% and over frequency to pickup at 110% and dropout at 105% of rated frequency Programmable voltage differential between

phases, set at 20%, and phase sequence monitoring

B. Time delay for override of momentary normal source power outages (delays engine start signal and transfer switch operation) Programmable 0-9999 seconds Factory set at 3 seconds, if not otherwise specified

C. Time delay to control contact transition time on transfer to either source Programmable 0-9999 seconds, factory set at 10 seconds

D. Time delay on retransfer to normal, programmable 0-9999 seconds, factory set at 300 seconds if not otherwise specified, with overrun to provide programmable 0-9999 second time delay, factory set at 300 seconds, unloaded engine operation after retransfer to normal

E Time delay on transfer to emergency, programmable 0-9999 seconds, factory set at 3 seconds.

F A maintained type load test switch shall be included to simulate a normal power failure, keypad initiated Provide a remote type load type test switch to switch to simulate normal power failure and initiated by remote switch

G A time delay bypass on retransfer to normal shall be included Keypad initiated

H Contacts, rated 10 Amps 30 volts DC, to close on failure of normal source to initiate engine starting and 10 Amps 30 volts to open on failure of normal source for project (OWNER) function.

I Light emitting diodes shall be mounted on the microprocessor panel to indicate switch is in normal position, switch is in emergency position and controller is running

J A plant exerciser shall be provided with (10) 7-day events, programmable for any day of the week and (24) calendar events, programmable for any month/day, to automatically exercise generating plant programmable in one minute increments Also include selection of either "no load" (switch will not transfer) or "load" (switch will transfer) exercise period Keypad initiated

K Provision to select either "no commit" or "commit" to transfer operation in the event of a normal power failure shall be included In the "no commit position," the load will transfer to the emergency position unless normal power returns before the emergency source has reach 90% of its rated values (switch will remain in normal). In the "commit position" the load will transfer to the emergency position after any normal power failure. Keypad initiated

L Two auxiliary contacts rated 10 Amp, 120 volts AC (for switches 100 to 800 Amps) 15 amp, 120 volts AC (for switches 1,000 to 4,000 Amps), shall be mounted on the main shaft, one closed on normal, the other closed on emergency Both contacts will be wired to a terminal strip for ease of customer connections

M A three-phase digital LCD voltage readout, with 1% accuracy shall display all three separate phase to phase voltages simultaneously, for both the normal and emergency source

N A digital LCD frequency readout with 1% accuracy shall display frequency for both normal and emergency source

O An LCD readout shall display normal source and emergency source availability

2 26 Approval

A As a condition of approval, the manufacturer of the combination automatic transfer switches shall verify that their switches are listed by Underwriters Laboratories, Inc , Standard UL-1008 with 3 cycle short circuit closing and withstand as follows·

R.M-S Symmetrical Amperes 480V AC
Current Limiting

Amperes	Closing and Withstand	Fuse Rating
100-400	42,000	200,000
600-800	65,000	200,000
1000-1200	85,000	200,000
1600-4000	100,000	200,000

B During the 3-cycle closing and withstand tests, there shall be no contact welding or damage The 3-cycle tests shall be performed without the use of current limiting fuses, the test shall verify that contacts separation has not occurred, and there is contact continuity across all phases, test procedures shall be in accordance with UL-1008 and testing shall be certified by Underwriter's Laboratories, Inc

C. When conducting temperature rise tests to UL-1008, the manufacture shall include post-endurance temperature rise tests to verify the ability of the transfer switch to carry full rated current after completing the overload and endurance tests

D The microprocessor controller shall meet the following requirements.

1 Storage conditions - 25 degrees C to 85 degrees C

2 Operation conditions - 20 degrees C to 70 degrees C ambient

3 Humidity 0 to 99% relative humidity, noncondensing

4 Capable of withstanding infinite power interruptions

5 Surge withstand per ANSI/IEEE C-37 90A-1978

E Manufacturer shall provide copies of test reports upon request

2 27 Manufacturer

A The transfer switch manufacturer shall employ a nationwide factory-direct, field service organization, available on a 24-hour a day, 365 days a year, call basis

B Provide stainless steel nameplate with field service contact and toll free phone number for each enclosure

C The manufacturer shall maintain records of each combination transfer bypass/isolation switch, by serial number, for a minimum 20 years

2 28 Warranty

Provide 5 year standard manufacturer's warranty consisting of 2 years parts and labor, and an additional 3 years of replacement parts Warranty shall be "on site" and warranty service shall be available by the factory service department on an emergency basis if required Depot or non-site warranties are not acceptable

PART III EXECUTION

3 1 Installation

Install the transfer switch as shown on the Plans and/or Exhibits Make the installation in accordance with manufacturer's instructions, verify all controls and interlock functions

3 2 Painting

Restore any marred surfaces to factory finish

3 3 Testing

A Test the switch with the packaged electric generator set in operating condition Demonstrate to the engineer that the automatic transfer switch performs all required functions

B Provide the services of a factory representative to check-out, test, and start-up the automatic transfer switch in conjunction with the standby generator, fully function test the automatic transfer switch to verify proper operation

PART IV. QUALITY ASSURANCE

4 1 Referenced Standards

Comply with applicable provisions and recommendations of the following Standards, except as otherwise shown or specified

A National Electrical Code

B Standards of National Electrical Manufacturers Association

C Institute of Electrical and Electronic Engineers

D American National Standards Institute

E American Society for Testing and Materials (ASTM)

F Underwriters Laboratories Inc (UL)

4 2 Submittals

A Information - Include the following information in submittal

1 Rated current, voltage and frequency

2 Number of poles

3 Symmetrical rms amperes withstand current at 0 2 power factor and at rated voltage

4 Physical dimensions

5 NEMA enclosure type

6 Itemized list of accessories

7 Show all factory wiring on wiring diagram and clearly indicate all wiring and connections to remote devices which are to be made in the field (Show only that wiring which pertains to switch and remote devices)

END OF SECTION

ITEM 16195

ELECTRICAL IDENTIFICATION

I GENERAL

A Summary Identification of electrical materials, equipment, and installations

B Submittals

1 Submit all products covered under this specification for Engineer's approval

2 Product Data· Submit for each type of product specified

3 Samples Submit for each color, lettering style, and or graphic representation required for identification materials, samples of labels and signs

4. Miscellaneous Schedule of identification nomenclature to be used for identification signs and labels

C Quality Assurance

1 National Electrical Code Components and installation shall comply with NFPA 70

2 Comply with ANSI C2

II MATERIALS

A Raceway and Cable Labels

1. Manufacturer's Standard Products Where more than one type is listed for specified application, selection is installer's option, however provide single type for each application category. Use colors prescribed by ANSI A13 1, NFPA 70, or as specified elsewhere

2 Conform to ANSI A13 1, Table 3, for minimum size of letters for legend and minimum length of color field for each raceway or cable size

a Color Black Legend on Orange Field

b Legend Indicates Voltage

3 Adhesive Labels Preprinted. flexible, self adhesive vinyl Legend is over- laminated with clear, wear and chemical resistant coating

4. Pre-Tensioned, Wraparound Plastic Sleeves Flexible, preprinted, color coded, acrylic bands sized to suit diameter of line it identifies and arranged to stay in place by pre-tensioned gripping action when placed in position

5. Colored Adhesive Tape Self adhesive vinyl tape not less than 3 mils thick by 1 to 2-inch wide (0 08 mm thick by 25 to 51 mm wide)

6. Underground Line Warning Tape Permanent, bright colored, continuous printed, vinyl tape with following features

a Size. Not less than 6-inch wide by 4 mils thick (152 mm wide by 0 102 mm thick)

b Compounded for permanent direct burial service

c Embedded continuous metallic strip or core

d Printed Legend Indicates type of underground line

7 Tape Markers Vinyl or vinyl cloth, self adhesive, wraparound type with preprinted numbers and letters

8 Aluminum, Wraparound Marker Bands· Bands cut from 0 014 inch (0.4 mm) thick aluminum sheet, with stamped or embossed legend, and fitted with slots or ears for permanently securing around wire or cable jacket or around groups of conductors

9 Plasticized Card Stock Tags: Vinyl cloth with preprinted and field printed legends Orange background, except as otherwise indicated, with eyelet for fastener

10. Aluminum Faced Card Stock Tags Wear resistant, 18 point minimum card stock faced on both sides with emboss able aluminum sheet,

0 002 inch (0 05 mm) thick, laminated with moisture resistant acrylic adhesive, and punched for fastener Preprinted legends suit each application

11 Brass or Aluminum Tags Metal tags with stamped legend, punched for fastener Dimensions. 2 by 2-inch (51 by 51 mm) by 0 05 inch (1 3 mm)

B Engraved Nameplates and Signs

1. Manufacturer's Standard Products Where more than one type is listed for specified application, selection is installer's option, however provide single type for each application category. Use colors prescribed by ANSI A13 1, NFPA 70, or as specified elsewhere

2 Engraving stock, melamine plastic laminate, 1/16-inch (1 6 mm) minimum thick for signs up to 20 square inch (129 sq cm), 1/8-inch (3 2 mm) thick for larger sizes

a Engraved Legend· Black Letters on White Face

b Punched for Mechanical Fasteners

3 Baked Enamel Signs for Interior Use· Preprinted aluminum signs, punched for fasteners, with colors, legend, and size as indicated or as otherwise required for application Use ¼-inch (6.4 mm) grommets in corners for mounting

4 Exterior, Metal Backed, Butyrate Signs Wear resistant, non-fading, preprinted, cellulose acetate butyrate signs with 0 0396 inch (1 mm), galvanized steel backing, with colors, legend, and size appropriate to application Use ¼-inch (6 4 mm) grommets in corners for mounting

5 Fasteners for Plastic Laminated and Metal Signs Self tapping stainless steel screws or No. 10/32 stainless steel machine screws with nuts, flat washers and lock washers

C Miscellaneous Identification Products

1. Cable Ties. Fungus-inert, self extinguishing, 1 piece, self locking, Type 6/6 nylon cable ties with following features

a. Minimum Width 3/16-Inch (5 mm)

b Tensile Strength 50 lb (22 3 kg) Minimum

c Temperature Range Minus 40 to 185° F (Minus 4 to 85° C)

d Color. As indicated where used for color coding

2 Paint Alkyd-urethane enamel Primer as recommended by enamel manufacturer

III EXECUTION

A Installation

1 Install identification devices according to manufacturer's written instructions

2 Install labels where indicated and at locations for best convenience of viewing without interference with operation and maintenance of equipment

3 Lettering, Colors, and Graphics Coordinate names, abbreviations, colors, and or designations used for electrical identification with corresponding designations used in Contract Documents or required by codes and standards Use consistent designations throughout Project

4 Sequence of Work Where identification is to be applied to surfaces that require finish, install identification after completion of finish work

5 Self Adhesive Identification Products Clean surfaces of dust, loose material, and oily films before applying

6 Identify feeders over 600 V with **"DANGER-HIGH VOLTAGE"** in black letters 2-inch (51 mm) high, stenciled with paint at 10 foot (3 m) intervals over continuous, painted orange background Identify the following·

a Entire floor area directly above conduits running beneath and within 12-inch (305 mm) of basement or ground floor that is in contact with earth or is framed above un-excavated space

b Wall surfaces directly external to conduits concealed within wall

c All accessible surfaces of concrete envelope around conduits in vertical shafts, exposed in building, or concealed above suspended ceilings

d. Entire surface of exposed conduits

7 Install painted identification as follows

a Clean surfaces of dust, loose material, and oily films before painting

b Prime Surfaces For galvanized metal, use single component, acrylic vehicle coating formulated for galvanized surfaces For concrete masonry units, use heavy duty, acrylic resin block filler For concrete surfaces, use clear, alkali resistant, alkyd binder type sealer

c Apply one intermediate and one finish coat of silicone alkyd enamel.

d Apply primer and finish materials according to manufacturer's instructions

8 Identify Raceways and Exposed Cables of Certain Systems with Color Banding Band exposed and accessible raceways of systems listed below for identification

a Bands Pre-tensioned, snap around, colored plastic sleeves, colored adhesive tape, or combination of both Make each color band 2-inch (51 mm) wide, completely encircling conduit, and place adjacent bands of 2 color markings in contact, side by side

b Locate bands at changes in direction, at penetrations of walls and floors, at 50 foot (15 m) maximum intervals in straight runs, and at 25 foot (7 6 m) in congested areas

c Colors As follows

1) Fire Alarm System Red

2) Fire Suppression Supervisory and Control System Red and Yellow

3) Combined Fire Alarm and Security System. Red and Blue

4) Security System Blue and Yellow

5) Mechanical and Electrical Supervisory System Green and Blue

6) Telecommunications System Green and Yellow

9 Install Caution Signs for Enclosures Over 600 V Use pressure sensitive, self-adhesive label indicating system voltage in black, preprinted on orange field Install on exterior of door or cover

10 Install Circuit Identification Labels on Boxes. Label externally as follows

a Exposed Boxes Pressure sensitive, self adhesive plastic label on cover

b Concealed Boxes Plasticized card stock tags.

c Labeling Legend· Permanent, water proof listing of panel and circuit number or equivalent

11 Identify Paths of Underground Electrical Lines During trench backfilling, for exterior underground power, control, signal, and communications lines, install continuous underground plastic line marker located directly above line at 6 to 8-inch (150 to 200 mm) below finished grade Where multiple lines installed in common trench or concrete envelope do not exceed an overall width of 16-inch (400 mm), use single line marker

Install line marker for underground wiring, both direct buried and in raceway

12 Color Code Conductors Secondary service, feeder, and branch circuit conductors throughout secondary electrical system

a Field applied, color coding methods may be used in lieu of factory coded wire for sizes larger than No 10 AWG

1) Colored, pressure sensitive plastic tape in half lapped turns for distance of 6-inch (150 mm) from terminal points and in boxes where splices or taps are made Apply last 2 turns of tape with no tension to prevent possible unwinding Use 1-inch (25 mm) wide tape in colors as specified Adjust tape bands to avoid obscuring cable identification markings

2) Colored cable ties applied in groups of 3 ties of specified color to each wire at each terminal or splice point starting 3-inch (76 mm) from terminal and spaced 3-inch (76 mm) apart Apply with special tool or pliers, tighten to snug fit, and cut off excess length.

b 208/120-V System As follows

1) Phase A Black

2) Phase B Red

3) Phase C Blue

4) Neutral White

5) Ground Green

c 480/277 - System As follows

1) Phase A Brown

2) Phase B: Purple

3) Phase C Yellow

4) Neutral. White

5) Ground: Green

13 Power Circuit Identification. Use metal tags or aluminum wraparound marker bands for cables, feeders, and power circuits in vaults, pull boxes, junction boxes, manholes, and switchboard rooms

a. Legend Use ¼-Inch (6 4 mm) steel letter and number stamping or embossing with legend corresponding to indicated circuit designations

b Fasten tags with nylon cable ties, fasten bands using integral ears

14 Apply identification to conductors as follows

a Conductors to Be Extended in Future· Indicate source and circuit numbers

b Multiple Power or Lighting Circuits in Same Enclosure Identify each conductor with source, voltage, circuit number, and phase Use color coding for voltage and phase indication of secondary circuit

c Multiple Control and Communications Circuits in Same Enclosure Identify each conductor by its system and circuit designation Use consistent system of tags, color coding, or cable marking tape

15 Apply warning, caution, and instruction signs and stencils as follows

a Install warning, caution, and instruction signs where indicated or required to ensure safe operation and maintenance of electrical systems and of items to which they connect Install engraved, plastic laminated instruction signs with approved legend where instructions or explanations are needed for system or equipment operation Install butyrate signs with metal backing for outdoor items

b Emergency Operating Signs. Install engraved laminate signs with white legend on red background with minimum 3/8-inch (9 mm) high lettering for emergency instructions on power transfer, load shedding, and or emergency operations

16 Install Identification as follows

a Apply equipment identification labels of engraved plastic laminate on each major unit of equipment, including central or master unit of each system. This includes communication, signal, and alarm systems, unless units are specified with their own self-explanatory identification Except as otherwise indicated, provide single line of text with ½-inch (13 mm) high lettering on 1½-inch (38 mm)

high label, where 2 lines of text are required, use lettering 2-inch (51 mm) high. Use black lettering on white field. Apply labels for each unit of following categories of equipment

1) Panelboards, Electrical Cabinets, and Enclosures

2) Access Doors and Panels for Concealed Electrical Items

3) Electrical Switchgear and Switchboards

4) Electrical Substations

5) Motor Control Centers

6) Motor Starters

7) Push Button Stations

8) Power Transfer Equipment

9) Contactors

10) Control Devices

11) Transformers

b Apply designation labels of engraved plastic laminate for disconnect switches, breakers, push buttons, pilot lights, motor control centers, and similar items for power distribution and control components above, except panelboards and alarm/signal components where labeling is specified elsewhere For panelboards, provide framed, typed circuit schedules with explicit description and identification of items controlled by each individual breaker.

Section 16210

STANDBY DIESEL ENGINE GENERATOR

PART 1 GENERAL

1 01 SCOPE OF WORK

A Furnish all labor, materials, equipment and incidentals to install a standby diesel engine generator in an outdoor weatherproof enclosure with UL 142 self contained fuel tank

B Standby Diesel Engine Generator Supplier is responsible for furnishing an outdoor enclosure with all, materials and any incidentals required for successful installation and operation of the generator

1 02 MEASUREMENT AND PAYMENT

A No separate payment will be made for work performed under this Section

1 03 RELATED SECTIONS

1 04 REFERENCE STANDARDS FOR STANDBY GENERATORS

A ANSI/NEMA MG 1 - Motors and Generators

B NFPA 70 – National Electrical Code

C NFPA 110 – Standard for Emergency and Standby Power Systems

D UL 1236 – Battery Chargers for Charging Engine-Starter Batteries

1 05 REFERENCE STANDARDS FOR ABOVE GROUND FUEL TANKS

A NFPA 70 – National Electrical Code

B UL 142 – Above ground double wall Steel Tanks for Flammable and Combustible Liquids

C UL 2085 – Two Hour Furnace Fire Test and Two Hour Simulated Pool Fire Test for Insulated and Protected Tanks

1 06 SUBMITTALS

A The submittal shall include Standby Diesel Engine Generator, Above ground Fuel Tank, Sound Attenuating Enclosure and other peripherals required for a complete system

Incomplete submittals or separate submittals for each of these components are not acceptable and will be returned without review

B Submit the following under 01330 – Submittal Procedures

1 Materials of constructions

2 Performance data, including fuel consumption and emissions, at 100%. 75%. 50%, and 25% load

3 Muffler attenuation curve

4 Installation instructions

5 Maintenance and operation manuals

C Submit shop drawings including

1 System schematics (power and controls)

2 Dimensioned Outline drawings

3 External connection locations and requirements

4 Wiring diagrams, three-line diagram

5 Fabrication/Erection/Installation drawings

6 Insulation requirements

7 Structural support drawings including rigging requirements. foundation and structural support requirements, operating and rigging weights, support point loading data

D Submit certified copies of performance tests of a diesel engine generator set, identical to the one specified herein An independent testing laboratory shall certify the test procedures The tests shall include

1 Torsiograph analysis per MIL-STD-705, Method 504 2, single step load pick-up per NFPA 99, Section 8 2 3

2 Harmonic analysis and voltage waveform description per MIL-STD-705. Method 601 4

3 Generator temperature rise per NEMA MG 1

4 Maximum motor starting capability per NEMA MG 1

5 Structural soundness per NEMA MG 1

6 Fuel consumption per NEMA MG 1

7 Transient response and steady state governing per NEMA MG 1

8 Three phase short-circuit test for mechanical and electrical strength per NEMA MG 1

9 Voltage and frequency regulation from no load to full load per NEMA MG1

10 Rotor static balance

11 Winding resistance and field resistance

12 Rotor dynamic balance Balance to not more than 2 0 mils or 0 25 mil per pole peak to peak whichever is less, measured on all bearings

13 Heat run at rated full load

14 Readout of all RTDs under stabilized heat-run conditions

15 High potential test

16 Efficiency by summation of losses

17 Voltage and current phase balance

18 Transient and sub-transient reactances

E Provide Ten (10) copies of Operation and Maintenance manuals, in accordance with Section 01782, in 3-ring binders with the following

1 Recommended spare parts list

2 Factory test reports

3 Drawings

4 As-built schematics

5 As-built wiring diagrams

6 Components data sheets

7 Maintenance recommendations

1 07 PERFORMANCE REQUIREMENTS

A Each diesel engine generator set shall be designed for the following performance

1 Diesel Engine Generator Set Duty Standby Unit shall operate at up to 100% of rating for no more than 400 hours per year during the interruption of normal power and for periodic testing

2 Maximum Specific Fuel Consumption at 100% Load

3 Nominal Engine Speed 1800 RPM

4 Engine Generator Connection Direct

5 Combustion Cycle 4-stroke

6 Jacket Water Cooling Radiator

7 After-cooler Cooling Radiator

8 Fuel Cooler Engine Mounted

9 Design Maximum Outside Air Temperature 110°F

10 Design Minimum Outside Air Temperature 0°F

11 EPA Tier requirements is Tier II

B Each generator shall be designed for the following performance

1 Ratings

a KW Size As indicated on the Drawings.

b Type Brushless. synchronous. 0 8 power factor, four-pole. revolving field, 2/3-pitch factor

c Voltage 480 volts, three-phase, four wires Neutral solidly-grounded

d Frequency 60 hertz

e Brushless exciter with permanent magnet and controls to sustain and regulate single phase and three-phase fault current at 300 percent of rated current for up to 10 seconds The exciter shall be capable of supplying the field excitation current required and shall deliver 150 percent of rated current for one minute without damage

f Unit shall be specifically designed to accommodate the maximum phase to ground short circuit currents developed on a solidly grounded neutral system

2 Efficiency at 0 80 power factor

Load	Efficiency (Minimum)
4/4	97 0%
3/4	96 0%
1/2	95 0%

3 Voltage Harmonic Content

a Total Harmonics - less than 5 percent

b Individual Harmonics - less than 3 percent

4 Voltage Regulation Steady State Regulated output voltage shall not vary from initial preset voltage by more than 0 25 percent of rated voltage upon application of full load, after transients have decayed to zero

5 Voltage Drift Shall not exceed ± 0.5 percent of rated voltage for a 60 degree F change for an 8 hour period

6 The time from engine start to full load pickup shall not exceed 10 seconds

1 08 QUALITY ASSURANCE

A Design and manufacture shall be in an ISO 9001 certified facility

B Meet or exceed ANSI/NEMA MG1

C Meet or exceed relevant IEEE standards

D Assembly shall be UL listed

E Design and manufacture shall meet or exceed relevant NFPA requirements

1 09 WARRANTY

A The diesel engine generator sets, including all components and appurtenances shall be warranted against failure caused by defects in materials or workmanship, including materials and labor from the date of Owner's acceptance

B Vendor shall warrant equipment to perform in accordance with the specified design conditions for a period of two years

PART 2 PRODUCTS

2 01 STANDBY GENERATOR ACCEPTABLE MANUFACTURERS (All manufacturers shall comply with specifications)

A Detroit Diesel (Stewart & Stephenson)

B Cummins Power Generation (Southern Plains Power)

C Caterpillar (Mustang Cat)

D Or Approved Equal

2 02 SYSTEM DESCRIPTION

A Each diesel engine generator set shall be completely skid mounted in an outdoor weatherproof sound attenuated enclosure including a muffler located inside the enclosure Enclosure door hinges and door hardware shall be Type 316 stainless steel The generator set and enclosure shall be installed on synthetic isolation pads on a concrete foundation

2 03 DIESEL ENGINE

A Provide a 4-stroke water-cooled diesel engine with electric start The engine aspiration shall be turbocharged and after-cooled The engine shall develop sufficient power at synchronous speed for standby operation at full (net) generator output

B Emissions from the engine shall be in compliance with the latest and most stringent applicable limitations listed in the New Source Performance Standards (NSPS), the Texas Commission on Environmental Quality (TCEQ) regulations, the State Implementation Plan (SIP) rules, and other applicable limitations, including, but not limit to Best Available Control Technology (BACT) at the time the engine is put into operation The engine shall be used for standby power as defined in the previous Paragraph titled "Performance Requirements "

2 04 FUEL SYSTEM

A Provide an electronically controlled, direct fuel injection system The diesel engine shall operate on no 2 diesel fuel and newly formulated diesel fuels for low emissions if required by the TCEQ

B Include the following components

1 Replaceable, engine gear driven self-priming, fuel transfer pump

2 Replaceable fuel filters with service indicators

3 Engine mounted fuel cooler

4 Sub-Base tank with level indicator and low fuel level alarm located in the generatoi enclosure to monitor fuel level

5 Water separator

6 Leak into containment tank alarm signal from the separate fuel tank

2 05 LUBRICATION SYSTEM

A Provide a factory installed lubrication system to deliver oil under pressure to all components requiring lubrication

B Include the following components

1 Crankshaft driven main oil pump

2 Electric pre-lube oil pump. if required by the manufacturer

3 Engine-mounted full flow engine coolant cooled oil cooler with automatic bypass

4 Full flow replaceable oil filters with automatic bypasses and service indicators

5 Oil level indicator

6 Low oil pressure alarm and shutdown

7 Oil pressure gauge

2 06 AIR INLET

A Provide factory installed combustion air intake system

B Include the following components Air filters with service indicators

2 07 COOLING SYSTEM

A Provide factory packaged cooling system for rejecting all heat generated by the engine with the exception of heat in the exhaust gases and radiant heat from the engine There shall be one cooling system per engine The cooling system shall be mounted on the skid

B Include the following components

1 One radiator per engine that shall include separate cooling cores for each engine jacket water and the after-cooler water Each radiator shall be sized for 115% of engine's maximum heat rejection Each radiator shall have a single engine driven fan All rotating parts shall be enclosed with a personnel guard The radiator shall be

mounted as part of the skid Include anti-freeze in the coolant, as recommended by the engine manufacturer, to protect the engine down to 20 degrees F, in the event the engine jacket cooler heaters fail

2 High temperature alarm

3 High temperature shutdown

4 Low coolant level

5 Engine mounted water pump for each coolant circuit

6 Engine mounted expansion tank with level sight glass for each coolant

7 Engine jacket coolant heaters shall be provided at 240 volts, single phase, 60 hertz

8 Alternator shall have anti-condensate heater

2 08 EXHAUST SYSTEM

A Provide a factory-assembled critical grade muffler There shall be one muffler per engine sized for flow at maximum engine output Each engine shall have one exhaust connection for connecting exhaust piping This exhaust connection shall include a manufacturer s supplied stainless steel flexible connection to compensate for thermal expansion of the engine and exhaust piping The flexible connection shall also provide vibration isolation between the engine and its exhaust piping The muffler shall be designed for horizontal installation inside the generator enclosure

B The critical grade muffler minimum insertion loss shall be.

1 28 db at 63Hz

2 35 db at 1800Hz

3 32 db at 8000Hz

C The muffler shells and all related exhaust piping, fittings, etc shall be constructed of 316 stainless steel The muffler shall have drains for removing condensate Drain valves must be accessible outside of insulation Drain piping shall extend down to within 2 inches of the concrete foundation

D The exhaust system shall be insulated to reduce heat gain inside the weatherproof sound attenuated enclosure The insulation system shall be easily removed and reinstalled to allow access to components under the insulation

2 09 VIBRATION ISOLATION SYSTEM

A Provide a factory installed spring vibration isolation system for the diesel engine generator set that shall prevent the transmission of vibrations to the outdoor weatherproof sound attenuated enclosure

2 10 GENERATOR

A Type Air-cooled self-ventilated

B Insulation

1 Class Class F insulation system meeting the requirements of NEMA MG 1 and made of non-hygroscopic materials

2 Temperature Rise Class B (80-degree C) rise over 40-degree C ambient by resistance measurement at fully rated load (1 0 service factor)

3 Application Vacuum pressure impregnated, sealed

C Windings and Leads Use not less than ASTM B 173, Class G, stranded copper conductors with insulation the same as or better than specified in the preceding Insulation paragraph Provide permanent identification numbers on leads according to NEMA MG 1 Provide each lead with additional identification within 6 inches of the stator frame Use crimp-on, solderless copper terminals on leads and place heat-shrink insulation sleeves or covers between leads and terminals

D Construction

1 Enclosure

a Heavy fabricated steel frame

b Indoors Drip-proof, fully guarded machine Include jacking bolts in frame

2 Stator High-grade silicon steel lamination, precision punching and individually insulated

E Bearings

1 Provide prepackaged regreasable bearings with a median expected life of 40,000 hours

2 Insulation Prevent shaft-bearing frame currents

F Hardware Provide structural bolts, washers nuts, pins, and similar items manufactured of high-strength steel Use only hexagon-head bolts and hexagon nuts Use corrosion-resistant materials or protect hardware from corrosion by hot-dip galvanizing or by use of stainless steel components

G Nameplates

1 Main Nameplate Provide each generator with a stainless steel nameplate meeting the requirements of the National Electrical Code and NEMA MG 1 for synchronous generators Include the following additional information on the main or an additional nameplate insulation system classification, connection diagram, direction of rotation, electric phase rotation for NEMA standard direction of rotation and number of safe starts in succession, including length of waiting period

2 Heater Nameplate Voltage and wattage

3 Bearings Nameplate Bearing identification and recommended lubricant

4 Attachment Attach nameplates to the generator with stainless steel pins or screws

H Terminal Boxes

1 Description Provide conduit terminal boxes and terminal housing cabinets for all wiring connections to generator

2 Material Make small boxes of cast iron or cast bronze Make large boxes of cabinet type construction of adequately braced 1/8-inch (11-gage) sheet steel Use machine screws to fasten covers

3 Gaskets Use durable gaskets resistant to heat, grease and moisture-laden air to seal all joints between boxes and covers or between boxes and machine enclosure

4 Auxiliary Leads Terminate space heater and similar leads on 600-volt rated molded insulation terminal blocks with ring-tongue terminals under screws Use only corrosion-resistant materials and brass screws Effectively isolate terminal blocks for different functions by suitable air separation or individual boxes Permanently identify all leads and terminals

I Space Heaters

1 Type Electric resistance, silicon rubber clad or equivalent non-oxidizing exterior, with maximum surface temperature of 130 C (266 F) Alternatively, provide two stainless-steel-sheathed conventional space heaters, each with rated watts at the specified voltage equal to twice the required value, and connect in series

2 Wattage As required to avoid condensation during shutdown, but not less than twice the value given in the Appendix of IEEE Standard 43, paragraph A 1 3 (twice the length in feet times the diameter in feet divided by 35)

3 Voltage 120 volts, single phase, 60 hertz for 1500 watts or less, 240 volts, single phase, 60 hertz for larger wattages

J Acceptable Generator Manufacturers Acceptable generator manufacturers are Electric Machinery, Ideal Electric, and Marathon Electric or the unit normally used by engine-generator manufacturer

2 11 CONTROL SYSTEM

A The control system shall provide digital voltage regulation A digital governor equivalent to the Woodward 2301A analog governor shall be provided

B Provide fuel level indication, low fuel level alarm and tank fuel leak alarm

2 12 STARTING SYSTEM

A Heavy-duty, battery-driven electric starter motor

B Fully charged, lead-calcium impact-resistant, plastic-cased, 24V DC storage battery mounted on the unit or in a separate corrosion-proof rack near the unit Make battery capacity sufficient for four cranking cycles at firing speed of 30 seconds duration each with 15-second rest periods Provide all battery cables, connections, electrolyte, water and a hydrometer

C Static, solid-state type battery charger unit which automatically controls the charge rate and which has an adjustable charging rate Include a charging rate ammeter, a voltmeter, and a manual reset, thermal overload circuit breaker to protect the rectifier assembly and transformer Select a charger suitable for operation at 120 volts, single phase 60 hertz Make charging time be 24 hours maximum Mount charger on the wall of the sound attenuating enclosure, using adequate vibration isolation devices

D Engine-driven alternator with full-wave rectifier and transistorized voltage regulator for charging battery when engine is running

2 13 PAINT

A Protect the exterior surfaces with primer and one coat of alkyd-modified, enamel machinery paint Provide primer and paint for field touch-up

2 14 WIRING AND COMPONENT IDENTIFICATION

A Identify power and control wiring with heat shrink tags as required

Identify equipment and internal components with nameplates as required

2 15 MAIN CIRCUIT BREAKER

A Provide a generator thermal magnetic main circuit breaker inside the generator enclosure The generator thermal magnetic main circuit breaker rating is indicated on the Project Drawings

2 16 FUEL TANK

A Acceptable Manufacturer ConVault

B Fuel Tank Description

1 The 24 hour fuel tank shall be an insulated above ground storage tank with primary and secondary containment plus overall encasement in concrete in accordance with UL Standard 142

2 The fuel tank design shall be adequate for loads due to 110 mph wind speed in 3 second gusts

C Tank Construction

1 The primary steel tank shall be rectangular in shape and have continuous welds on all exterior seams, manufactured in accordance with UL listing requirements and UL Standard 142

2 The primary steel tank shall be pressure tested at 5 psig for 24 to 48 hours

3 The primary steel tank shall have an "emergency vent" system as per NFPA 30 Code requirements

4 The protected and insulated fuel tank system shall have a thru-tank leak detector tube to allow for physical checkup and monitoring capability between the primary and the secondary containment

5 The primary steel tank shall be pressurized at 5 psig during concrete encasement

6 The outer surface of the primary steel tank shall be covered by a minimum of 1/4" thick (6 4 mm) Styrofoam insulation panels

7 The secondary containment shall consist of a 30 Mil thick (0 76 mm) High-Density Polyethylene membrane enclosing the steel tank and insulation material

8 The primary steel tank and the secondary containment shall be encased in six inches of monolithic reinforced concrete, with minimum design strength of 5,000 psi at 28 days The concrete design shall include the following for long-term durability air entrainment, water reducing admixture, and steel reinforcement Concrete encasements with seams are not acceptable

9 The protected and insulated fuel tank system shall be of concrete exterior and a continuous and visually verifiable monolithic (seamless) pour on top, bottom ends, and sides and contain no cold joints or heat sinks (heat transfer points) The fuel tank must be shop fabricated and tested in accordance with the UL listings Designs that use two layers of steel with insulation material between them are not acceptable

10 No steel or insulating material shall come in contact with the concrete or other

corrosive material

11 All openings shall be from the top only

12 All exposed metal must be stainless steel

13 The protected and insulated fuel tank system shall include a 15-gallon stainless steel, UL listed spill containment, and shall include a normally closed valve to release spilled product into the primary steel tank Spill containment which routes the spilled product into interstitial area is not acceptable

14 The protected and insulated fuel tank system shall have a coated concrete exterior to resist weather and reflect sunlight Models with steel exteriors are not acceptable

15 The protected and insulated fuel tank system shall have a warranty of 30 years

16 The protected and insulated fuel tank system design shall have been in use for a minimum of twenty (20) years

17 The protected and insulated fuel tank system shall have two (2) bolts for connecting grounding conductors for lightning protection in accordance with NFPA 780

D Piping

1 Provide minimum Schedule 40 double walled stainless steel piping between generator and the fuel tank

PART 3 EXECUTION

3 01 FACTORY TESTING

A The manufacturer shall perform the following factory tests on each diesel engine generator The tests shall be conducted in accordance with the manufacturer's standard practice The test values shall meet or exceed the requirements of NEMA MG 1 All instrumentation used for testing shall have been calibrated within 6 months of the test date and calibration shall be NIST traceable

1 Measurement of insulation resistance

2 High potential testing

3 Measurement of winding resistance

4 Open circuit saturation curve

5 Phase balance, current and voltage

6 Full load test for 1 hour, minimum

7 Fuel consumption at 25%, 50%, 75%, and 100% load

B The manufacturer shall perform generator insulation resistance field tests on each diesel engine generator set The Owner shall have the option of witnessing each test The results of each test shall be submitted to the Owner for approval, prior to acceptance of each diesel engine generator set

3 02 INSTALLATION

A Follow manufacturer's installation procedures Have installation supervised and approved by a qualified representative of the unit manufacturer

3 03 START-UP

A Provide the services of a factory-trained service engineer to inspect each diesel engine generator set installation and provide a report to Owner certifying that the installation complies with all requirements of manufacturer's warranty

B Provide the services of a factory-trained service technician to perform start-up on each diesel engine generator set in accordance with the start-up, installation and maintenance manuals as published by manufacturer. Provide a copy of the completed start-up record data for each diesel engine generator set as part of the operation and maintenance manuals

3 04 FIELD TESTS

A General

1 Perform field tests at the site after installation is complete and in the presence of the Owner's Representative Notify Owner's Representative 15 working days before each test

2 Manufacturer's Representative. Have the engine generator manufacturer furnish a representative to operate the unit during the field tests, to check all details of the installation, and to instruct the operators Include the services of the representative at no additional cost to the Owner

3 Preparation for Testing Have the engine generator system completed and ready for operation at the time field tests are to be run Fill fuel tanks, provide all necessary lube oil, coolant, and other fluids, and install new, unused oil and air filter elements

4 Instruments Provide all instruments necessary to conduct the tests

5 Design, Specification, and NFPA 110 Parameters For each recorded parameter, provide a written tabulation of the manufacturer's published range of permissible operating values and design parameters Tabulation shall also include parameters

specified by this section, and parameters required in accordance with field testing per NFPA 110

B Installation Test Perform on-site installation test in accordance with NFPA 110, section 5-13 2 3, in the presence of the Owner's Representative

C Full Load Test Perform full load test in accordance with NFPA 110, sections 5-13 2 4 5-13 2 5, 5-13 2 6 and 5-13 2 7, in the presence of the Owner's Representative

D Crank Cycle Test Perform crank cycle test in accordance with NFPA 110, section 5-13 2 8, in the presence of the Owner's Representative

E 6-Hour Test

1 Complete a 6-hour, full-load test using a vendor furnished resistive load bank as a condition for final acceptance

2 The 6-hour full load test may be performed in conjunction with or as an extension of the NFPA 110 Full Load Test specified in paragraph 3 3C of this section

3 Read and record all gauges and meters before starting the test, then every 5 minutes during the first 15 minutes, then every 15 minutes during the next 2 hours and then every half hour during remainder of the 6-hour period

4 Remove load and run engine generator at no load for 15 minutes, then shut unit down and immediately make one fuel tank recording of all gauge and meter indications

5 Remove load bank and restore all electrical connections, as required

6 Have recordings field witnessed during test by the Owner

7 Deliver copies of witnessed recordings to the Engineer and the Owner's Representative within one week of the test, quantities in accordance with Division One requirements Where not specified elsewhere, deliver six copies to the Owner's Representative

F Actual Load Tests

1 After successful completion of the 6-hour, full-load test described above, make additional on-site tests using actual available loads in the presence of the Owner's Representative to demonstrate satisfactory performance of the complete engine generator system Include different sequenced start-ups of the various specified loads, as directed by the Owner's Representative This test will be scheduled at a time and date determined by the Owner

2 After all other tests have been successfully completed, operate each engine generator system under actual available loads for up to 4 hours of successful operation

G After final testing, refill fuel tank. Verify that coolant and lubricants are at satisfactory levels, fill as required

END OF SECTION

ITEM 16452

GROUNDING

I GENERAL

A Summary

1 Item includes

a Solid grounding of electrical systems and equipment

b Basic requirements for grounding for protection of life, equipment, circuits, and systems

c Grounding requirements specified in this Section may be supplemented in other sections of these Specifications

B. References (Latest Edition)

1 American Society for Testing and Materials (ASTM)

a B3 - Standard Specification for Soft or Annealed Copper Wire

b B8 - Standard Specification for Concentric-Lay-Stranded Copper Conductors, Hard, Medium-Hard, or Soft

c B33 - Standard Specification for Tinned Soft or Annealed Copper Wire for Electrical Purposes

d E699 E1 - Standard Criteria for Evaluation of Agencies Involved in Testing, Quality Assurance, and Evaluating Building Components in Accordance with Test Methods Promulgated by ASTM Committee E-6

2 National Fire Protection Association (NFPA)

NFPA 78 - Lightning Protection Code

3 Underwriter's Laboratories (UL) 467 - UL Standard for Safety Grounding and Bonding Equipment

C Submittals

1 Submit all products covered under this specification for Engineer's approval

2 Test Results

Report of field tests and observations certified by Contractor

D Quality Assurance

1 Items provided under this section shall be listed OR labeled by UL or other Nationally Recognized Testing Laboratory (NRTL)

a Term "NRTL" shall be as defined in OSHA Regulation 1910 7

b Terms "listed" and "labeled" shall be as defined in National Electrical Code, Article 100

2 Regulatory Requirements

National Electrical Code (NEC) Components and installation shall comply with National Fire Protection Association (NFPA) 70

II MATERIALS

A Grounding and Bonding Products

1 Products Of types indicated and of sizes and ratings to comply with current NEC Where types, sizes, ratings, and quantities indicated are in excess of NEC requirements, more stringent requirements and greater size, rating, and quantity indications govern

2 Conductor Materials Copper

B Wire and Cable Connectors

1 Comply with Item 16020 - Electrical, Basic Materials and Methods Conform to NEC Table 8, except as otherwise indicated, for conductor properties, including stranding

2 Equipment Grounding Conductor Green insulated

3 Grounding Electrode Conductor Stranded Cable

4 Bare Copper Conductors

a Solid Conductors ASTM B3

b Assembly of Stranded Conductors ASTM B8

c Tinned Conductors ASTM B33

C Miscellaneous Conductors

1 Ground Bus Bare annealed copper bars of rectangular cross section

2 Braided Bonding Jumpers Copper tape, braided No 30 gage bare copper wire, terminated with copper ferrules

3 Bonding Strap Conductor/Connectors Soft copper, 0 05 inch thick and 2-inch wide, except as indicated

D Connector Products

1 General Listed and labeled as grounding connectors for materials used

2 Pressure Connectors High-conductivity-plated units

3 Bolted Clamps Heavy-duty units listed for application

4 Exothermic Welded Connections. Provide in kit form and select for specific types, sizes, and combinations of conductors and other items to be connected

E Grounding Electrodes

1 Ground Rods Copper-clad steel with high-strength steel core and electrolytic-grade copper outer sheath, molten welded to core

Size ¾-Inch by 10 feet unless otherwise indicated

2. Plate Electrodes. Copper plates, minimum 0 10 inch thick, size as indicated

III EXECUTION

A Application

1 Equipment Grounding Conductor Application Comply with NEC Article 250 for sizes and quantities of equipment grounding conductors, except where larger sizes or more conductors are indicated

a Install separate insulated equipment grounding conductors with circuit conductors

1) Raceway may be used as equipment ground conductor where feasible in non-hazardous areas and permitted by NEC for lighting circuits and receptacle circuits

2) Install insulated equipment ground conductor in nonmetallic raceways unless designated for telephone or data cables

2 Underground Conductors Bare, stranded copper except as otherwise indicated

3 Signal and Communications For telephone, alarm, instrumentation and communication systems, provide #4 AWG minimum green insulated copper conductor in raceway from grounding electrode system to each terminal cabinet or central equipment location

4 Ground separately derived systems required by current NEC to be grounded in accordance with NEC paragraph 250-26

5 Metal Poles Supporting Outdoor Lighting Fixtures Ground pole to grounding electrode as indicated in addition to separate equipment grounding conductor run with supply branch circuit

B Installation

1 General Ground electrical systems and equipment in accordance with current NEC requirements except where Plans and/or Exhibits or Specifications exceed NEC requirements

2 Ground Rods

a Locate minimum of one-rod length from each other and at least same distance from any other grounding electrode

b Interconnect ground rods with bare conductors buried at least 24 in below grade

c Connect bare-cable ground conductors to ground rods by means of exothermic welds except as otherwise indicated

d Make connections without damaging copper coating or exposing steel

e Use ¾-inch by 10 foot ground rods except as otherwise indicated

f Drive rods until tops are 6-inches below finished floor or final grade except as otherwise indicated

3 Metallic Water Service Pipe

a Provide insulated copper ground conductors, sized as indicated, in conduit from building main service equipment, or ground bus, to main metallic water service entrances to building

b Connect ground conductors to street side of main metallic water service pipes by means of ground clamps

c Bond ground conductor conduit to conductor at each end.

4 Route grounding conductors along shortest and straightest paths possible without obstructing access or placing conductors where they may be subjected to strain, impact, or damage, except as indicated

5 Test Wells. Locate as indicated, and fabricate in accordance with details indicated

C Connections

1 General Make connections to minimize possibility of galvanic action or electrolysis Select connectors, connection hardware, conductors, and connection methods so metals in direct contact will be galvanically compatible

a Use electroplated or hot-tin-coated materials to assure high conductivity and make contact points closer in order of galvanic series

b. Make connections with clean bare metal at points of contact

c Aluminum to Steel Connections Stainless steel separators and mechanical clamps

d Aluminum to Galvanized Steel Connections Tin-plated copper jumpers and mechanical clamps

e Coat and seal connections involving dissimilar metals with inert material such as red lead paint to prevent future penetration of moisture to contact surfaces

2 Exothermic Welded Connections

a Use for connections to structural steel and for underground connections except those at test wells

b Install at connections to ground rods and plate electrodes

c Comply with manufacturer's written recommendations

d Welds that are puffed up or that show convex surfaces indicating improper cleaning are not acceptable

3 Terminations

a Terminate insulated equipment grounding conductors for feeders and branch circuits with pressure-type grounding lugs

b Where metallic raceways terminate at metallic housings without mechanical and electrical connection to housing, terminate each conduit with grounding bushing

c Connect grounding bushings with bare grounding conductor to ground bus in housing

d Bond electrically noncontinuous conduits at both entrances and exits with grounding bushings and bare grounding conductors

4 Tighten grounding and bonding connectors and terminals, including screws and bolts, in accordance with manufacturer's published torque tightening values for connectors and bolts Where manufacturer's torquing requirements are not indicated, tighten connections to comply with torque tightening values specified in UL 486A and UL 486B

5 Connections at Test Wells Use compression-type connectors on conductors and make bolted- and clamped-type connections between conductors and ground rods

6 Compression-Type Connections Use hydraulic compression tools to provide correct circumferential pressure for compression connectors Use tools and dies recommended by manufacturer of connectors Provide embossing die code or other standard method to make visible indication that connector has been adequately compressed on ground conductor

7 Moisture Protection· Where insulated ground conductors are connected to ground rods or ground buses, insulate entire area of connection and seal against moisture penetration of insulation and cable

D Underground Distribution System Grounding

1 Pull Boxes

a Install ¾-inch by 10 foot driven ground rod close to wall and set rod depth such that 4-inches will extend above finished floor

b Where necessary, install ground rod before manhole is placed and provide No 1/0 bare tinned-copper conductor from ground rod into manhole through waterproof sleeve in manhole wall

c Protect ground rods passing through concrete floor with double wrapping of pressure-sensitive tape or heat-shrunk insulating sleeve from 2-inch above to 6-inch below concrete

d Seal floor opening with waterproof nonshrink grout

E Field Quality Control

1 Test

a Subject completed grounding system to megger test at each location where maximum ground resistance level is specified, at service disconnect enclosure ground terminal, and at ground test wells

b Measure ground resistance without soil being moistened by any means other than natural precipitation or natural drainage or seepage and without chemical treatment or other artificial means of reducing natural ground resistance

c Perform tests by 2-point method in accordance with Section 9 03 of IEEE 81, "Guide for Measuring Earth Resistivity, Ground Impedance and Earth Surface Potentials of a Grounding System"

2 Ground/resistance maximum values shall be as follows

a Equipment Rated 500 kVA and Less 10 Ohms

b Equipment Rated 500 kVA to 1000 kVA. 5 Ohms

c Equipment Rated Over 1000 kVA· 3 Ohms

d Unfenced Substations and Pad-Mounted Equipment 5 Ohms

e Manhole Grounds 10 Ohms

3 Deficiencies Where ground resistances exceed specified values, notify Engineer, and if directed by Engineer, modify grounding system to reduce resistance values Where measures are directed that exceed those indicated, provisions of Contract covering changes will apply

4 Report· Prepare test reports, certified by testing organization, of ground resistance at each test location Include observations of weather and other phenomena that may affect test results Describe measures taken to improve test results

F Restoration

1 Restore surface features at areas disturbed by excavation and reestablish original grades except as otherwise indicated on Plans and/or Exhibits

2 Where sod has been removed, replace it as soon as possible after backfilling is completed

3 Restore areas disturbed by trenching, storing of dirt, cable laying, and other Work to their original condition

4 Include necessary topsoiling, fertilizing, liming, seeding, sodding, sprigging, or mulching, as specified in Item 2102 - Clearing and Grubbing

5 Restore disturbed paving as indicated in either Item 2600 - Repair of Asphalt Paving or Item 2515 - Concrete Pavement

CONSTRUCTION PLANS FOR

SANTA FE HIGH SCHOOL GENERATOR

TO SERVE

SANTA FE HIGH SCHOOL
IN
GALVESTON COUNTY, TEXAS

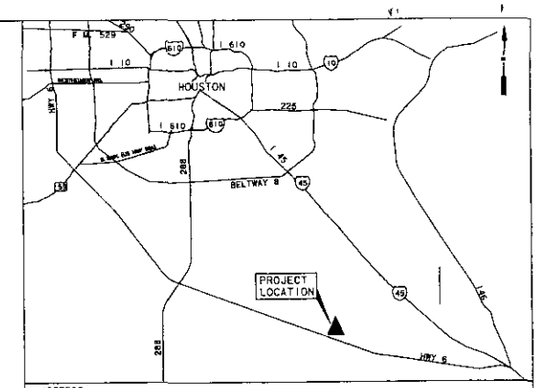

ADDRESS
16000 Texas 6
Santa Fe TX 77517

VICINITY MAP
SCALE: NONE

SHEET INDEX

1 COVER SHEET
2 GENERAL CONSTRUCTION NOTES & DETAILS
3 SCHOOL SITE PLAN
4 ONE LINE DIAGRAM
5 CENTERPOINT ENERGY DETAILS
6 CENTERPOINT ENERGY DETAILS
7 FUEL SYSTEMS
8 FUEL SYSTEMS
9 FUEL SYSTEMS CONTROL PANEL
10 MISCELLANEOUS DETAILS/SCHEDULE

JOB. NO. 0384–9003E

DATE : AUGUST 2011

IN ACCORDANCE WITH THE AGREEMENT BETWEEN THE COUNTY OF GALVESTON OWNER, AND CRESCENT ELECTRIC CONTRACTOR, FOR CONSTRUCTION OF THE SANTA FE HIGH SCHOOL GENERATOR. THE DOCUMENTS HEREWITH ARE HEREBY CERTIFIED AND IDENTIFIED AS PART OF THE AGREEMENT

CRESCENT ELECTRIC CONTRACTOR
BY: [signature]
TITLE: President
DATE: April 2-10/12

COUNTY OF GALVESTON OWNER
BY: [signature]
TITLE: County Judge
DATE: 8/9/12

STATE OF TEXAS
GREGG R HAHN
90159
LICENSED
PROFESSIONAL ENGINEER
7/22/11

ENGINEER

LJA Engineering, Inc.

2929 Briarpark Drive
Suite 600
Houston Texas 77042 3703

Phone 713 953 5200
Fax 713 953 5026
FRN-N-1386

OWNER

SANTA FE HIGH SCHOOL

APPROVED FOR CONSTRUCTION

BY _____ DATE _____

SANTA FE HIGH SCHOOL GENERATOR LJA JOB NO 0384-9003E

GENERAL NOTES.

1 ALL WORK SHALL BE DONE IN ACCORDANCE WITH THE STANDARD DETAILS AND TECHNICAL SPECIFICATIONS.

2.ELEVATION AND CONTOURS SHOWN ARE BASED ON

3.TRENCH SAFETY SYSTEM TO MEET AS A MINIMUM,THE REQUIREMENTS OF OSHA SAFETY AND HEALTH REGULATIONS PART 1926.SUBPART P

4.EXISTING UNDERGROUND UTILITIES ARE NOT SHOWN THE CONTRACTOR SHALL CONTACT CENTERPOINT TEXAS NEW MEXICO POWER AND AT&T TELEPHONE AND TEXAS ONE-CALL SYSTEM (1-800-245-4545) FOR PIPELINES AND CABLE TV

5.IT IS THE CONTRACTOR'S RESPONSIBILITY TO DETERMINE THE DEPTH LOCATION AND EXISTENCE OF ALL EXISTING UTILITIES WHICH MAY CONFLICT WITH THE PROPOSED CONSTRUCTION

6.CONTRACTOR SHALL VERIFY ALL DIMENSIONS AND CONDITIONS IN THE FIELD BEFORE COMMENCING WORK IT SHALL BE THE CONTRACTOR'S RESPONSIBILITY TO REPORT ANY AND ALL DISCREPANCIES TO THE OWNER AND THE ENGINEER IN A TIMELY MANNER.

7 CONTRACTOR SHALL ADEQUATELY PROTECT EXISTING STRUCTURES,UTILITIES,TREES,SHRUBS,OTHER PERMANENT OBJECTS AND ADJOINING PROPERTY

8.NO OPEN EXCAVATIONS SHALL BE LEFT OPEN OVERNIGHT ALL EXCAVATIONS WHICH CANNOT BE BACKFILLED OVERNIGHT SHALL BE COVERED,AS A MINIMUM WITH STEEL PLATING WHEN IN PAVED AREAS; 3/4 INCH PLYWOOD,WOOD PLANKING WITH OSHA ORANGE PLASTIC EXPANDED MESH BARRIER AROUND PERIMETER IN UNPAVED AREAS,OR AS APPROVED BY THE CITY OF FRIENDSWOOD.

9.EXISTING PAVEMENTS,CURBS,SIDEWALKS AND DRIVEWAYS DAMAGED OR REMOVED DURING CONSTRUCTION BY THE CONTRACTOR FOR THEIR CONVENIENCE SHALL BE REPLACED BY THE CONTRACTOR AT HIS EXPENSE

10.CONTRACTOR SHALL PLAN SCHEDULE,AND PERFORM HIS WORK SO AS TO PROVIDE AND MAINTAIN SAFE PUBLIC TRAFFIC (INGRESS AND EGRESS) AS WELL AS NON-INCONVENIENCE TO ALL PROPERTY OWNERS ALONG THE PROJECT RIGHT OF WAYS DURING CONSTRUCTION PERIOD.

11.FOR LOCATIONS WHERE OPEN CUT CONSTRUCTION IS REQUIRED IN STREETS THE CONTRACTOR SHALL FURNISH AND MAINTAIN ADEQUATE BARRICADES,WARNING AND DIRECTING SIGNS,FLAGS,AND LIGHTS,NOTIFY PROJECT MANAGER

12.ALL SIGNS,BARRICADES,PAVEMENT MARKINGS,TRAFFIC SIGNALS,AND CHANNELIZING DEVICES USED TO HANDLE TRAFFIC SHALL BE SHOWN ON A TRAFFIC CONTROL PLAN (TO BE APPROVED BY THE CITY) AND SHALL CONFORM TO THE LATEST REVISIONS OF THE TEXAS MANUAL ON UNIFORM TRAFFIC CONTROL DEVISED FOR STREET AND HIGHWAYS (TMUTCD), PART VI TRAFFIC CONTROLS FOR STREET AND HIGHWAY CONSTRUCTION AND MAINTENANCE OPERATIONS

13.CONTRACTOR SHALL NOTIFY THE FOLLOWING:TEXAS DEPT OF RURAL AFFAIRS (TDRA) LES RUMBURG 409-934-8575 and MAUREEN MAHONEY 512-936-6738.
GALVESTON COUNTY OFFICE OF EMERGENCY MANAGEMENT MR.JOHN SIMSEN (281) 309-5002.
W.C.I.D.19 MR.LEE CRUNDMANN (409) 925-3525
48 HOURS PRIOR TO THE START OF CONSTRUCTION

14.CONTRACTORS SHALL MAINTAIN DRAINAGE TO ORIGINAL OR BETTER CONDITION THROUGHOUT THE CONSTRUCTION OF THE PROJECT NO SEPERATE PAY THOSE AREAS NOT COVERED BY PAVEMENT STRUCTURES AND/OR SIDEWALKS SHALL BE GRADED TO DRAIN AND SEEDED PER SPECIFICATION ANY DRAINAGE DITCH OR STRUCTURE DISTURBED DURING CONSTRUCTION SHALL BE RESTORED TO EXIST CONDITION OR BETTER

15.INGRESS AND EGRESS SHALL BE MAINTAINED AT SITE

16.OBTAIN ALL PERMITS,NOT PROVIDED BY OWNER,PRIOR TO STARTING CONSTRUCTION

17 THE CONTRACTOR SHALL BE RESPONSIBLE TO MAINTAIN AN UPDATED REDLINED AS-BUILT" SET OF PLANS ON SITE FOR INSPECTION BY THE ENGINEER,THE ENGINEER'S REPRESENTATIVE,AND OWNER REPRESENTATIVES.

18.WORK PERFORMED UNDER THIS CONTRACT IS GOVERNED BY REQUIREMENTS OF SEVERAL PUBLIC GOVERNMENTAL,AND PRIVATE ENTITIES CONTRACTOR SHALL COMPLY WITH ALL REQUIREMENTS OF SAID ENTITIES.

19.WARNING:OVERHEAD TELEPHONE FACILITIES
OVERHEAD TELEPHONE LINES MAY EXIST ON THE PROPERTY WE HAVE NOT ATTEMPTED TO MARK THOSE LINES SINCE THEY ARE CLEARLY VISIBLE,BUT YOU SHOULD LOCATE THEM PRIOR TO BEGINNING ANY CONSTRUCTION

20.CAUTION:UNDERGROUND GAS FACILITIES
LOCATIONS OF CENTERPOINT ENERGY MAIN LINES (TO INCLUDE CENTERPOINT ENERGY INTRASTATE PIPELINE,LLC. WHERE APPLICABLE) ARE SHOWN IN AN APPROXIMATE LOCATION ONLY SERVICE LINES ARE USUALLY NOT SHOWN OUR SIGNATURE ON THESE PLANS ONLY INDICATES THAT OUR FACILITIES ARE SHOWN IN APPROXIMATE LOCATION IT DOES NOT IMPLY THAT A CONFLICT ANALYSIS HAS BEEN MADE.THE CONTRACTOR SHALL CONTACT THE UTILITY COORDINATING COMMITTEE AT (713) 223-4567 OR 1-800-669-8344.A MINIMUM OF 48 HOURS PRIOR TO CONSTRUCTION TO HAVE MAIN AND SERVICE LINES FIELD LOCATED.

21 WHEN CENTERPOINT ENERGY PIPELINE MARKINGS ARE NOT VISIBLE CALL (713) 967-8037 (7:00 AM TO 4:30 PM) FOR STATUS OF LINE LOCATION REQUEST BEFORE EXCAVATION BEGINS.WHEN EXCAVATING WITHIN EIGHTEEN INCHES (18") OF THE INDICATED LOCATION USING NON-MECHANIZED EXCAVATION PROCEDURES.WHEN CENTERPOINT ENERGY FACILITIES ARE EXPOSED,SUFFICIENT SUPPORT MUST BE PROVIDED TO THESE FACILITIES TO PREVENT EXCESSIVE STRESS TO THE PIPING.

22.THE CONTRACTOR IS FULLY RESPONSIBLE FOR ANY DAMAGES CAUSED BY THIS FAILURE TO EXACTLY LOCATE AND PRESERVE THESE UNDERGROUND FACILITIES.

23.WARNING:OVERHEAD ELECTRIC FACILITIES
OVERHEAD LINES MAY EXIST ON THE PROPERTY WE HAVE NOT ATTEMPTED TO MARK THOSE LINES SINCE THEY ARE CLEARLY VISIBLE,BUT YOU SHOULD LOCATE THEM PRIOR TO BEGINNING ANY CONSTRUCTION TEXAS LAW SECTION 752, HEALTH & SAFETY CODE,FORBIDS ALL ACTIVITIES IN WHICH PERSONS OR THINGS MAY COME WITHIN SIX (6) FEET OF LIVE OVERHEAD HIGH VOLTAGE LINES.PARTIES RESPONSIBLE FOR THE WORK INCLUDING CONTRACTORS,ARE LEGALLY RESPONSIBLE FOR THE SAFETY OF CONSTRUCTION WORKERS UNDER THIS LAW THIS LAW CARRIES BOTH CRIMINAL AND CIVIL LIABILITY TO ARRANGE FOR LINES TO BE TURNED OFF OR REMOVED CALL CENTERPOINT EBERGY AT (713)207 2222. NO SEPERATE PAY

TESTING

ALL TESTING SHALL CONFORM WITH TECHNICAL SPECIFICATION 0140 TESTING LABORATORY SERVICES

1 SECTION 02125 EXCAVATION AND BACKFILL OFOR UTILITIES:

1.1 BACKFILL SHALL BE PLACED IN MAXIMUM LIFTS OF EIGHT (8) INCHES AND COMPACTED TO A DENSITY OF NOT LESS THAN 95% STANDARD PROCTOR WITH OPTIMUM MOISTURE BETWEEN PLUS 3% AN MINUS 3% OR AS OTHERWISE SPECIFIED BY THE SOILS LABORATORY TEST SHALL BE TAKEN EVERY LIFT EVERY 500 LINEAR FEET OR BETWEEN MANHOLES,WHICHEVER RESULTS IN THE GREATEST NUMBER OF DENSITY TESTS.

1.2 FIELD MOISTURE/DENSITY TEST SHALL BE PERFORMED AT A FREQUENCY OF AT LEAST ONE (1) TEST PER 500 SQUARE YARDS OF COMPACTED LIFT THE DENSITY SHALL NOT BE LESS THAN 95% OF STANDARD PROCTOR WITH A MOISTURE CONTENT OF BETWEEN PLUS 3% AND MINUS 3% OPTIMUM MOISTURE OR AS DETERMINED BY SOILS LABORATORY MAXIMUM LIFT FOR TESTING COMPACTED FILL SHALL NOT EXCEED TWELVE (12) INCHES

2. SECTION 02213 LIME STABILIZED SUBGRADE:

2.1 LIME

2.1.1 PERCENT LIME DETERMINATION TEST SHALL BE TAKEN BY A CERTIFIED TESTING LABORATORY IN ACCORDANCE WITH ASTM C977-92,BUT SHALL NOT BE LESS THAN 6%.

2.1.2.THE PERCENT LIME USED SHALL BRING THE SOIL TO A PI OF NOT MORE THAN 15.

2.1.3 HYDRATED LIME SHALL BE SAMPLED AND TAKEN AT THE DISTRIBUTION AREA OF THE TANKER TRUCK AND TESTED.

2.2.SUBGRADE

2.2.1 ALL SUBGRADE SHALL MEET THE FOLLOWING REQUIREMENTS WHEN TEST DRY BY LABORATORY SIEVES:

MINIMUM PASSING 1 3/4 INCH SIEVE	100%
MINIMUM PASSING 3/4 INCH SIEVE	85%
MINIMUM PASSING #4 SIEVE	60%

2.2.2. ALL SUBGRADE SHALL PASS A DENSITY TEST OF NOT LESS THAN 95% STANDARD PROCTOR. METHOD OF TESTING AS PER ASTM D698.TEST TO BE TAKEN EVERY 200 FEET AS MEASURED ALONG CENTERLINE OF THE ROADWAY AT VARYING DISTANCES FROM CENTERLINE OF THE ROADWAY OR AS DIRECTED BY THE CITY

2.2.3.THICKNESS TESTS SHALL BE TAKEN AT EVERY 200 FEET AS MEASURED ALONG THE CENTERLINE OF THE ROADWAY

2.2.4.IF A SINGLE STORM EVENT PRODUCES ONE (1) INCH OR MORE OF RAINFALL,CONTRACTOR SHALL RETEST THE SUBGRADE FOR DENSITY THE INTERVAL FOR DENSITY RETESTS SHALL BE NOT LESS THAN 500 FEET AS MEASURED ALONG THE CENTERLINE OF THE ROADWAY

3. SECTION 03300 CAST-IN-PLACE CONCRETE:

3.1.THE SLUMP WHEN PLACING CONCRETE,SHALL NOT BE GREATER THAN FIVE (5) INCHES.THIS TEST SHALL BE TAKEN FOR EVERY FIFTY (50) CUBIC YARDS OF CONCRETE,BUT MAY BE TAKEN WHEN IN DOUBT BY THE TESTING LABORATORY TECHNICIAN OR THE CITY PROJECT MANAGER.

3.2.TEMPERATURE OF THE CONCRETE WILL BE TAKEN AS DIRECTED BY THE CITY PROJECT MANAGER AND SHALL BE LESS THAN 90°F

3.3.THERE SHALL BE CYLINDERS TAKEN BY THE TESTING LABORATORY TECHNICIAN NUMBERING FOUR (4) CYLINDERS PER 100 CUBIC YARDS OF PAVING OR PART THERE OF FOR EACH DAYS PLACEMENT TWO (2) CYLINDERS SHALL BE TESTED AT SEVEN (7) DAYS AND TWO (2) CYLINDERS SHALL BE TESTED AT TWENTY-EIGHT (28) DAYS WITH A MINIMUM COMPRESSIVE STRENGTH OF 3,000 PSI IN TWENTY-EIGHT (28) DAYS IN ACCORDANCE WITH ASTM C31 TEST

PRIVATE UTILITY NOTES

CAUTION: UNDERGROUND GAS FACILITIES (CONT.)

WHEN CENTERPOINT ENERGY FACILITIES ARE EXPOSED, SUFFICIENT SUPPORT MUST BE PROVIDED TO THE FACILITIES TO PREVENT EXCESSIVE STRESS ON THE PIPING.

ACTIVITIES ON OR ACROSS CENTERPOINT ENERGY FEE OR EASEMENT PROPERTY

NO APPROVAL TO USE, CROSS OR OCCUPY CENTERPOINT FEE OR EASEMENT PROPERTY IS GIVEN.

CAUTION: AT&T CABLES

THE LOCATION OF AT&T FACILITIES ARE NOT SHOWN. THE CONTRACTOR SHALL DETERMINE THE EXACT LOCATION BEFORE COMMENCING WORK. CONTRACTOR AGREES TO BE FULLY RESPONSIBLE FOR ANY AND ALL DAMAGES WHICH MIGHT BE OCCASIONED BY THIS FAILURE TO EXACTLY LOCATE AND PRESERVE THESE UNDERGROUND UTILITIES.

THE CONTRACTOR SHALL CALL 1-800-344-8377 A MINIMUM OF FORTY-EIGHT (48) HOURS PRIOR TO CONSTRUCTION TO HAVE UNDERGROUND LINES FIELD LOCATED

WHEN EXCAVATING WITHIN TWENTY-FOUR (24) INCHES OF AT&T FACILITIES, ALL EXCAVATIONS MUST BE ACCOMPLISHED USING NON-MECHANIZED EXCAVATION PROCEDURES. WHEN BORING THE CONTRACTOR SHALL EXPOSE THE AT&T FACILITIES.

WHEN AT&T TELEPHONE FACILITIES ARE EXPOSED, THE CONTRACTOR WILL PROVIDE SUPPORT TO THE CONDUIT DUCTS OR CABLES. WHEN EXCAVATING NEAR TELEPHONE POLES THE CONTRACTOR SHALL BRACE THE POLE FOR SUPPORT

CAUTION: UNDERGROUND GAS FACILITIES

WHEN EXCAVATING WITHIN EIGHTEEN INCHES (18") OF THE INDICATED LOCATION OF CENTERPOINT ENERGY FACILITIES ALL EXCAVATION MUST BE ACCOMPLISHED USING NON MECHANIZED EXCAVATION PROCEDURES.

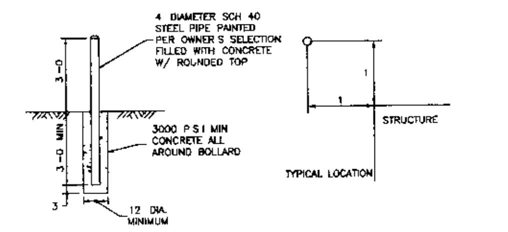

PIPE BOLLARD DETAIL
NTS

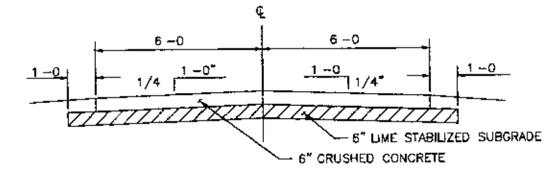

CRUSHED CONCRETE ACCESS ROAD
NTS

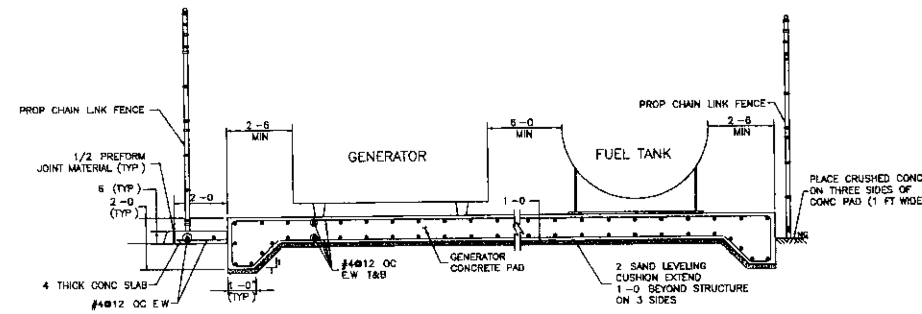

CONCRETE SLAB DETAIL
NTS

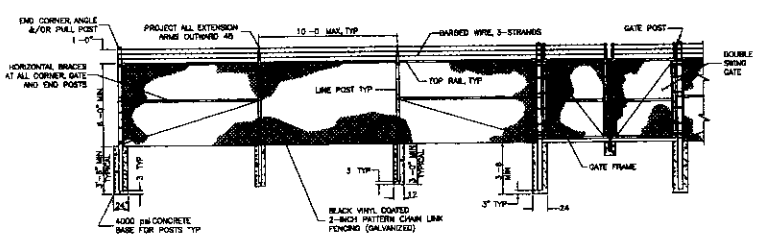

SITE FENCING – CHAINLINK
N.T.S.

BENCHMARK:

NOTES:

DATE	REVISION	BY

SANTA FE HIGH SCHOOL
GALVESTON COUNTY

SANTA FE HIGH SCHOOL
GENERATOR

GENERAL CONSTRUCTION NOTES AND DETAILS

STATE OF TEXAS
GREGG B. HAAN
90159
LICENSED
PROFESSIONAL ENGINEER

LJA Engineering, Inc.
2929 Briarpark Drive
Suite 600
Houston, Texas 77042
Phone 713.953.5200
Fax 713.953.5026
FRN F 1386

LJA PROJECT NO. 0384 9003E

DRAWN: S L S DESIGN: G B H DATE: AUG 2011

SCALE AS SHOWN

SHEET NO 2 OF 10

SANTA FE HIGH SCHIOOL GENERATOR LJA JOB NO 0384-9003E

9/13/2011
\Proj\dak\0384\9003\9003E Santa Fe HS\02 Santa Fe Gen Notes & Detail..dgn

GENERATOR DATA
2 000 KW 2 500 KVA @ 8PF
480V 3P 4W DIESEL GENERATOR SET

NFPA 110 Class 141
Type 10
Level 2

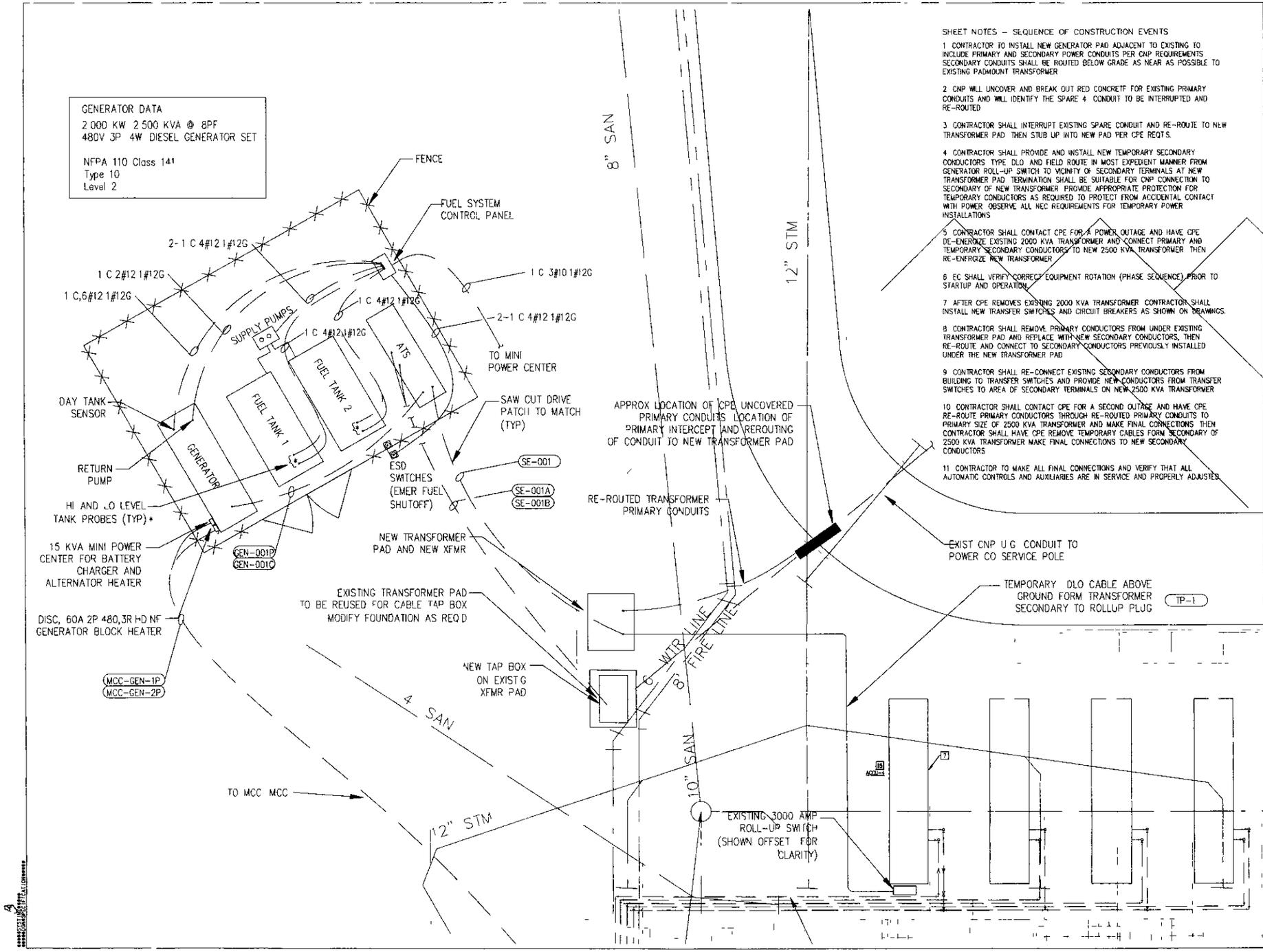

SHEET NOTES – SEQUENCE OF CONSTRUCTION EVENTS

1 CONTRACTOR TO INSTALL NEW GENERATOR PAD ADJACENT TO EXISTING TO INCLUDE PRIMARY AND SECONDARY POWER CONDUITS PER CNP REQUIREMENTS SECONDARY CONDUITS SHALL BE ROUTED BELOW GRADE AS NEAR AS POSSIBLE TO EXISTING PADMOUNT TRANSFORMER

2 CNP WILL UNCOVER AND BREAK OUT RED CONCRETE FOR EXISTING PRIMARY CONDUITS AND WILL IDENTIFY THE SPARE 4 CONDUIT TO BE INTERRUPTED AND RE-ROUTED

3 CONTRACTOR SHALL INTERRUPT EXISTING SPARE CONDUIT AND RE-ROUTE TO NEW TRANSFORMER PAD THEN STUB UP INTO NEW PAD PER CPE REQTS.

4 CONTRACTOR SHALL PROVIDE AND INSTALL NEW TEMPORARY SECONDARY CONDUCTORS TYPE DLO AND FIELD ROUTE IN MOST EXPEDIENT MANNER FROM GENERATOR ROLL-UP SWITCH TO VICINITY OF SECONDARY TERMINALS AT NEW TRANSFORMER PAD TERMINATION SHALL BE SUITABLE FOR CNP CONNECTION TO SECONDARY OF NEW TRANSFORMER PROVIDE APPROPRIATE PROTECTION FOR TEMPORARY CONDUCTORS AS REQUIRED TO PROTECT FROM ACCIDENTAL CONTACT WITH POWER OBSERVE ALL NEC REQUIREMENTS FOR TEMPORARY POWER INSTALLATIONS

5 CONTRACTOR SHALL CONTACT CPE FOR A POWER OUTAGE AND HAVE CPE DE-ENERGIZE EXISTING 2000 KVA TRANSFORMER AND CONNECT PRIMARY AND TEMPORARY SECONDARY CONDUCTORS TO NEW 2500 KVA TRANSFORMER THEN RE-ENERGIZE NEW TRANSFORMER

6 EC SHALL VERIFY CORRECT EQUIPMENT ROTATION (PHASE SEQUENCE) PRIOR TO STARTUP AND OPERATION

7 AFTER CPE REMOVES EXISTING 2000 KVA TRANSFORMER CONTRACTOR SHALL INSTALL NEW TRANSFER SWITCHES AND CIRCUIT BREAKERS AS SHOWN ON DRAWINGS.

8 CONTRACTOR SHALL REMOVE PRIMARY CONDUCTORS FROM UNDER EXISTING TRANSFORMER PAD AND REPLACE WITH NEW SECONDARY CONDUCTORS, THEN RE-ROUTE AND CONNECT TO SECONDARY CONDUCTORS PREVIOUSLY INSTALLED UNDER THE NEW TRANSFORMER PAD

9 CONTRACTOR SHALL RE-CONNECT EXISTING SECONDARY CONDUCTORS FROM BUILDING TO TRANSFER SWITCHES AND PROVIDE NEW CONDUCTORS FROM TRANSFER SWITCHES TO AREA OF SECONDARY TERMINALS ON NEW 2500 KVA TRANSFORMER

10 CONTRACTOR SHALL CONTACT CPE FOR A SECOND OUTAGE AND HAVE CPE RE-ROUTE PRIMARY CONDUCTORS THROUGH RE-ROUTED PRIMARY CONDUITS TO PRIMARY SIZE OF 2500 KVA TRANSFORMER AND MAKE FINAL CONNECTIONS THEN CONTRACTOR SHALL HAVE CPE REMOVE TEMPORARY CABLES FORM SECONDARY OF 2500 KVA TRANSFORMER MAKE FINAL CONNECTIONS TO NEW SECONDARY CONDUCTORS

11 CONTRACTOR TO MAKE ALL FINAL CONNECTIONS AND VERIFY THAT ALL AUTOMATIC CONTROLS AND AUXILIARIES ARE IN SERVICE AND PROPERLY ADJUSTED

G.N. REMARKS

ELECTRICAL SCOPE OF WORK

1 PROVIDE AND INSTALL NEW 2000 KW DIESEL GENERATOR EXTERNAL TANKAGE AND AUTOMATIC TRANSFER SWITCH AS REQUIRED FOR FULLY AUTOMATIC OPERATION OF EMERGENCY GENERATOR POWER

2 TWO ELECTRCAL OUTAGES WILL BE REQUIRED MAKE ALL COORDINATION WITH POWER COMPANY AND PAY ALL ASSOCIATED FEES THERE IS A CPE TERMS AND CONDTONS CONTRACT AND THIS SHALL BE CONSIDERED TO BE AN INTEGRAL PART OF THIS CONTRACT OBSERVE ALL CONDITIONS AND OTHER CPE REQUIREMENTS

3 THERE IS AN EXISITNG GENERATOR ROLL-UP PLUG THAT WILL BE USED TO CONNECT TEMPORARY POWER FOR THE SCHOOL WHILE WORK IS BEING CARRIED OUT

4 PROPOSED BIDDERS SHALL VISIT THE JOB SITE PRIOR TO BID TO BECOME FAMILIARIZED WITH THE PROJECT CONDITIONS

NOTES

SPECIAL INSTRUCTIONS

1 ALL DIMENSIONS TO EXISTING STRUCTURES OR SITE ELEMENTS SHALL BE VERIFIED IN FIELD

2 POC FOR CNP REPRESENTATIVE IS FRANK DELEON 713-207-4941 CONTACT CNP FOR COORDINATION PRIOR TO DOING ANY WORK

STATE OF TEXAS
JAMES E. THOMPSON, JR.
70302
REGISTERED PROFESSIONAL ENGINEER
01-22-11

James E Thompson
James E. Thompson & Associates
ATP Consulting Engineers
1100 County Road 1966
Alvin, Texas 77511
TBPE FIRM # 1386
Tel (281) 331-7191 Fax (281) 331-7192 cell (832) 330-1000
Texas headquarters email jeteng@att.net

DATE	REVISION	BY

SANTA FE HIGH SCHOOL

PERMANENT EMERGENCY GENERATOR

SCHOOL SITE PLAN

LJA Engineering & Surveying, Inc.
2929 Briarpark Drive
Suite 600
Houston, Texas 77042
Phone 713.953.5200
Fax 713.953.5026
FRN F-1386

LJA PROJECT NO # 0384 9003E

DRAWN _____ DESIGN _____ DATE APR 2011

SCALE(1/2 1-0

SHEET NO ESP-1 0 OF

EMERGENCY GENERATOR FOR SANTA FE HIGH SCHOOL - PROJECT NO 0384-9003E

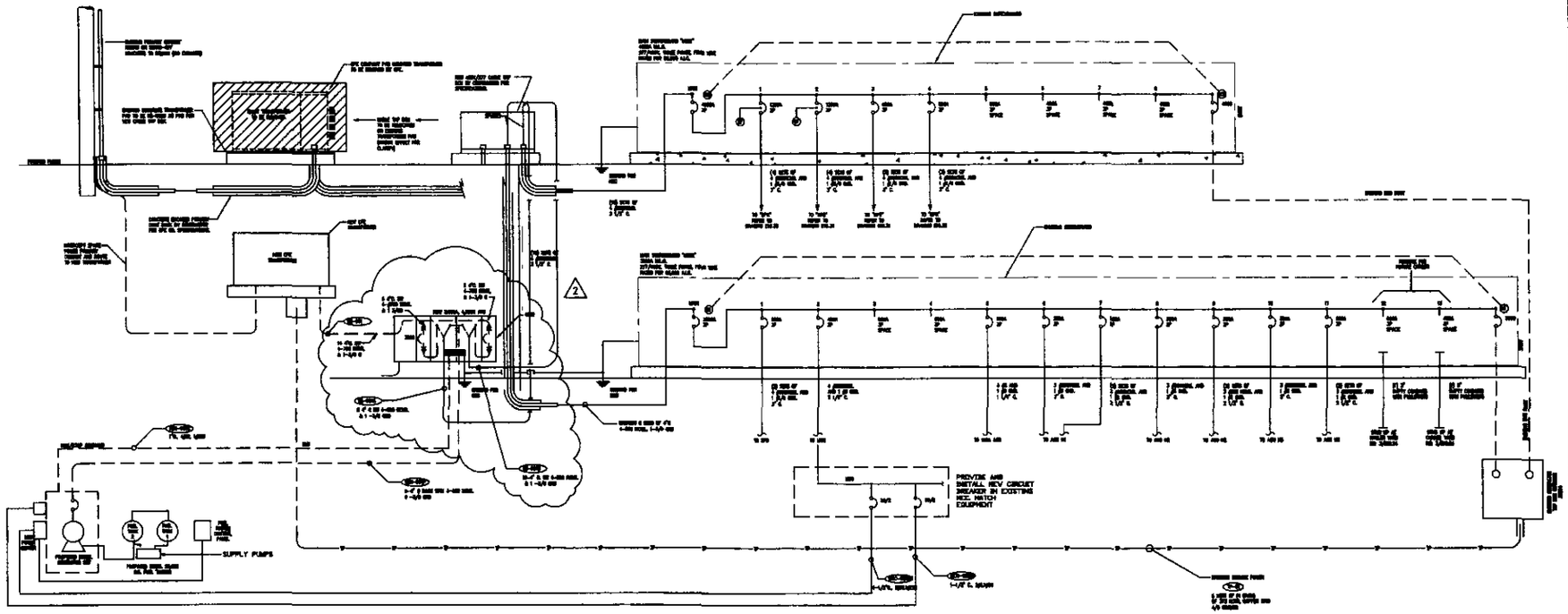

FINAL ELECTRICAL LOAD ANALYSIS	
CAUSEYGRAM ADDITIONS	KVA
RECEPTACLES	32
LIGHTING	45
MOTORS	184
MISC	22
SOUND SYSTEM	27
THEATRE LIGHTING	440
LARGEST MOTOR	85
ELEC WATER HEAT	89
TOTAL	724 KVA ADDED

FINAL ELECTRICAL LOAD ANALYSIS	
CENTRAL PLANT UPGRADED	KVA
CHILLERS/PUMPS	579
MOTORS	66
LARGEST MOTOR	44
MISC	38
CHILLER REMOVAL	(474)
CH WATER PUMP REMOVAL	(54)
TOTAL ADDED	767 KVA ADDED
TOTAL REMOVED	528 KVA REMOVED
GRAND TOTAL ADDED	239 KVA ADDED

FINAL ELECTRICAL LOAD ANALYSIS	
CALCULATIONS	KVAS
EXISTING 12 MONTH PEAK	1969
X 125%	2461
AUDITORIUM (ADDED)	724
CENTRAL PLANT (ADDED)	767
CENTRAL PLANT (REMOVED)	528
TOTAL CONNECTED	3425 KVA/ 4123 AMPS @ 480 V 3PH, 4W
SERVICE AMPACITY	7500 A

FUEL TANKAGE/CONTAINMENT

PROVIDE AND INSTALL 2-10000 GALLON DIESEL FUEL TANKS (UL2085) SIMILAR TO THOSE SHOWN ON DRAWING ESP1.0. PROVIDE CONTROL EQUIPMENT AND PUMPS AS SHOWN ON PLANS, A CONTAINMENT BERM WITH SUMP DRAIN AND FENCING AS SHOWN IN PLANS. INSTALLATION TO BE PROVIDED BY A FUEL TANK CONTRACTOR AND SHALL BE TURN-KEY INSTALLER TO PROVIDE ALL PERMITS AND COMPLETE ALL FORMS AND REPORTING REQUIREMENTS (INCLUDING SPCC REQUIREMENTS) AS REQUIRED BY TCEQ, EPA, AND OTHER GOVERNING AGENCIES, STATE FIRE MARSHAL, STATE HEALTH DEPARTMENT PAY ALL ASSOCIATED PERMITS AND FEES.

LIGHTING PROTECTION

PROVIDE AND INSTALL LIGHTNING PROTECTION FOR GENERATOR AND TANKAGE EQUIPMENT AND ASSOCIATED FENCING. TIE INTO EXISTING SFHS LIGHTING PROTECTION SYSTEM IF POSSIBLE. INSTALLATION TO BE CERTIFIED BY STATE OF TEXAS LIGHTNING PROTECTION EQUIPMENT INSTALLER. CONTACT BONDED LIGHTING PROTECTION SYSTEMS, CARROLLTON, TX FOR QUOTATION, 972-247-1988.

1

PANEL MIN POWER CENTER
CU BUS
10 KAIC FULLY RATED

120/208V 1PH 3W
60A MCB 100A BUS

SURFACE MOUNT
NEMA 3R
NEUTRAL+GND BUS

NO	DESCRIPTION	LOAD	WIRE	OCP	NO	DESCRIPTION	LOAD	WIRE	OCP
1	ALTER HTR	500	12	20	2	SPACE			
3	BATTERY CHGR	500	12	20	4	SPACE			
5	FUEL SYSTEM	2500	8	40/2	6	SPACE			
7	-	-	8	2P	8	SPACE			
9	SPACE				10	SPACE			
11	SPACE				12	SPACE			
		3500					0		

AMPACITY REQ D=3500/208 X 125= 210 AMPS

GENERATOR MINI-POWER CENTER PANEL SCHEDULE

SCALE: NTS

NOTES:

1 CONTRACTOR SHALL CONTACT CPE UNDERGROUND ENGINEER, FRANK DE LEON, 713-207-4941 AND ARRANGE A PRE-CONSTRUCTION MEETING PRIOR TO DOING ANY WORK OR PURCHASING ANY MATERIALS.

2. GENERATOR IS TO BE PRE-PURCHASED BY OWNER (SFISD), INSTALLED BY CONTRACTOR.

3. SEE CONSTRUCTION SEQUENCE SHEET E2.0.

4. KIRK-KEY ARRANGEMENT SHOWN IS EXISTING. MAIN BREAKERS IN BOTH 'MSB1' AND 'MSB2' WILL BE TAKEN OUT OF SERVICE VIA 'KIRK KEYS' AND SWITCHBOARDS ARE TO BE BACK FED VIA EXISTING OUTDOOR GENERATOR/ROLL-UP TAP BOX AND TEMPORARY 'DLO' (DIESEL LOCOMOTIVE) CABLE FIELD ROUTED FROM SECONDARY OF NEW PADMOUNT TRANSFORMER.

5. SPLICE TO EXISTING CONDUCTORS ASSOCIATED WITH SWITCHBOARD.

6 ALL UNDERGROUND CONDUIT TO BE ENCASED IN CONCRETE, BOTH PRIMARY AND SECONDARY, IN ACCORDANCE WITH CNP CONSTRUCTION STANDARDS. AT THE SERVICE ENTRANCE (MAIN DEVICES), PROVIDE SCHEDULE 40 PVC PIPE WITH OCAL BLUE STEEL ELBOWS IN CONCRETE SIMILAR TO THE CNP CONSTRUCTION STANDARDS.

STATE OF TEXAS
JAMES E. THOMPSON, JR.
70302
REGISTERED
PROFESSIONAL ENGINEER

11-19-11

James E Thompson

ADDENDUM NO 8

MARK	REVISIONS	BY
1		
2		

SANTA FE HIGH SCHOOL

PERMANENT EMERGENCY GENERATOR

ONE LINE DIAGRAM

L.J.A. Engineering & Surveying, Inc.

L.J.A. PROJECT NO.: 0384-9002E

DATE: APR. 2011

E-2

SHEET NO. OF

EMERGENCY GENERATOR FOR SANTA FE HIGH SCHOOL - PROJECT NO. 0384-9002E

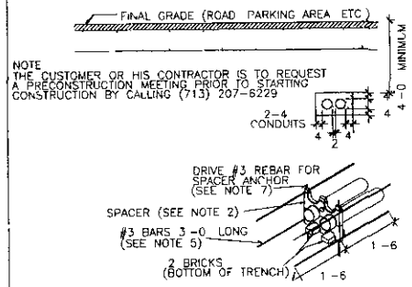

NOTE
THE CUSTOMER OR HIS CONTRACTOR IS TO REQUEST A PRECONSTRUCTION MEETING PRIOR TO STARTING CONSTRUCTION BY CALLING (713) 207-6229

NOTES

1 CONDUIT TO BE PVC MINIMUM GRADE TYPE EB
2 SPACERS SHOULD BE INSTALLED NOT MORE THAN 10 -0 APART
3 PLACE REINFORCING BARS IN 4 CORNERS OF THE CONCRETE WHERE SPACERS ARE USED
4 ALL EXTERIOR CONCRETE COVER DIMENSIONS ARE MINIMUM
5 CONCRETE SHALL BE IN ACCORDANCE WITH CNP SPECIFICATION 007-221-01 LATEST REVISION
6 ON COLD JOINT CONCRETE POUR USE #5 REBAR (3 -0 IN LENGTH EXPOSED 1 -6)
7 CONDUITS END SHALL BE PLUGGED WITH A DUCT CAP OR OTHER TYPE OF CAPPING DEVICE
8 A ONE FOOT VERTICAL CLEARANCE MUST BE MAINTAINED BETWEEN CNP'S DUCTBANK AND ALL NON-CNP FACILITIES CROSSING THE DUCTBANK
9 *A FIVE FOOT HORIZONTAL CLEARANCE MUST BE MAINTAINED* BETWEEN CNP'S DUCTBANK AND ALL NON-CNP FACILITIES RUNNING PARALLEL TO THE DUCTBANK (JOINT TRENCHING NOT PERMITTED)
10 INSTALL JET LINE IN ALL CONDUITS AND A #14 AWG WIRE IN ONE CONDUIT

2 THREE PHASE DUCKBANK FEEDER (BASED ON DISTRIBUTION STANDARD DLFS2C)

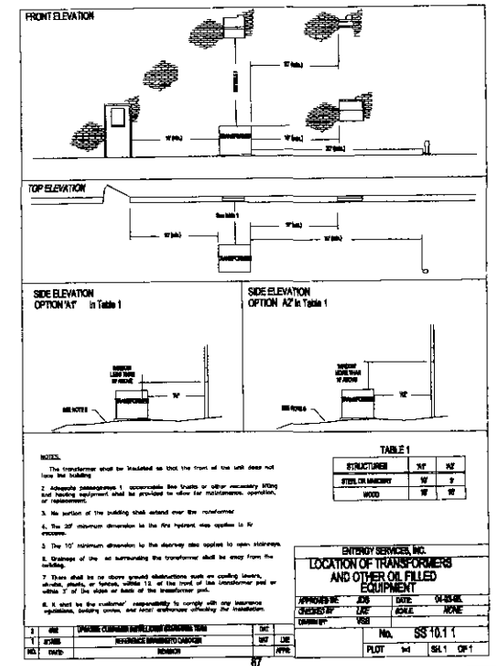

3 2500 KVA, 3 PHASE PADMOUNT FOUNDATION 12 kV AND 35 kV (SPECIAL APPLICATION) TRANSFORMER LOCATION REQUIREMENTS

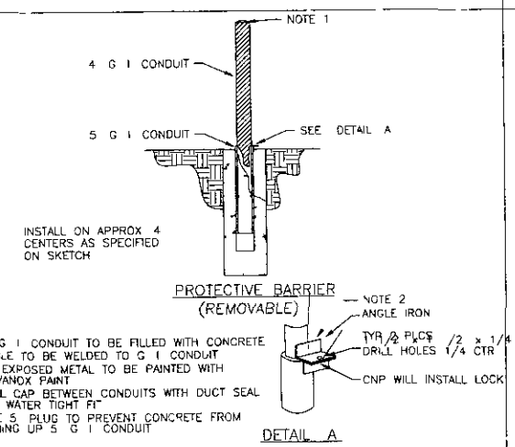

4 PROTECTIVE BARRIER - REMOVABLE (BASED ON DISTRIBUTION STANDARD 80-950)

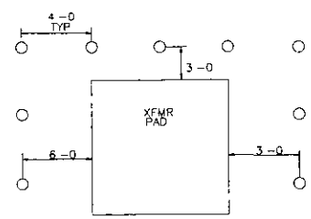

NOTE 9 REMOVABLE POST BARRIERS ARE REQUIRED

5 REMOVABLE BOLLARD DETAILS NTS

NOTES

1 INSTALL ALL ELECTRICAL CONDUIT TO A DEPTH OF NOT LESS THAN 36 IN RED CONCRETE ENCASEMENT PLUS TWO RED CAUTION TAPES ALL BURIED ELECTRICAL CONDUITS OTHER THAN SECONDARY ELECTRICAL SERVICE SHALL BE INSTALLED TO A DEPTH PRESCRIBED BY NEC AND/OR AHJ AND BUT NOT LESS THAN 36 DEEP IN PVC CONDUIT COVERED WITH CAUTION PLASTIC TAPE BEFORE BACKFILL

2 UNDERGROUND DISTRIBUTION FEEDERS AND BRANCH CIRCUITS SHALL BE INSTALLED IN SCHEDULE 80 PVC CONDUIT WITH GROUNDING CONDUCTOR SIZED PER NEC 90 DEGREE ELBOWS SHALL BE RIGID GALVANIZED STEEL AND STUB-UPS THROUGH CONCRETE FLOOR SHALL BE PVC COATED RIGID GALVANIZED STEEL CONDUIT

3 *REFER TO TERMS AND CONDITIONS CONTRACT FOR FURTHER* REQUIREMENTS THE SITE PLAN ESP1 0 SHALL GOVERN PLACEMENT OF ALL EQUIPMENT AND ROUTING

CENTER POINT ENERGY DETAILS
NTS

BENCHMARK

NOTES:

STATE OF TEXAS
JAMES E. THOMPSON, JR.
70302
REGISTERED PROFESSIONAL ENGINEER
01-15-11

James E Thompson
LJA Engineering & Surveying, Inc.
2929 Briarpark Drive
Suite 600
Houston, Texas 77042
Phone 713.953.5200
Fax 713.953.5026
FRN F-1386

DATE	REVISION	BY

SANTA FE HIGH SCHOOL

PERMANENT EMERGENCY GENERATOR

CENTERPOINT ENERGY DETAILS

LJA PROJECT NO : 0384 9003E

DRAWN: DESIGN: DATE: APR 2011

SCALE E-3

SHEET NO OF

EMERGENCY GENERATOR FOR SANTA FE HIGH SCHOOL - PROJECT NO 0384 9003E

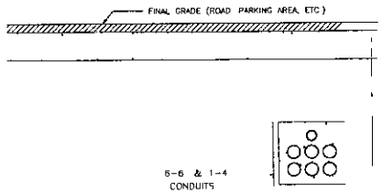

NOTE
THE CUSTOMER OR HIS CONTRACTOR IS TO REQUEST A PRECONSTRUCTION MEETING PRIOR TO STARTING CONSTRUCTION BY CALLING (713) 207-6158

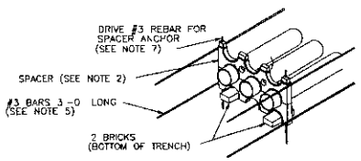

NOTES
1 CONDUIT TO BE PVC MINIMUM GRADE TYPE EB
2 SPACERS SHOULD BE INSTALLED NOT MORE THAN 10-0 APART
3 ALL EXTERIOR CONCRETE COVER DIMENSIONS ARE MINIMUM
4 CONCRETE SHALL BE IN ACCORDANCE WITH HL&P SPECIFICATION 007-221-01 LATEST REVISION
5 PLACE REINFORCING BARS IN 4 CORNERS OF THE CONCRETE WHERE SPACERS ARE USED
6 ON COLD JOINT CONCRETE POUR USE #5 REBAR
7 LENGTH OF REBAR FOR SPACER ANCHOR WILL VARY PER DUCT BANK HEIGHT

1 THREE PHASE DUCKBANK FEEDER (BASED ON DISTRIBUTION STANDARD DLFS2C)

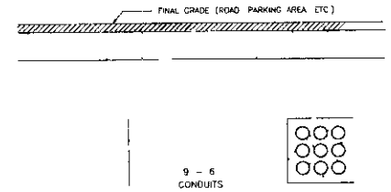

NOTE
THE CUSTOMER OR HIS CONTRACTOR IS TO REQUEST A PRECONSTRUCTION MEETING PRIOR TO STARTING CONSTRUCTION BY CALLING (713) 207-6158

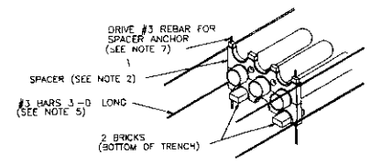

NOTES
1 CONDUIT TO BE PVC MINIMUM GRADE TYPE EB
2 SPACERS SHOULD BE INSTALLED NOT MORE THAN 10-0 APART
3 ALL EXTERIOR CONCRETE COVER DIMENSIONS ARE MINIMUM
4 CONCRETE SHALL BE IN ACCORDANCE WITH HL&P SPECIFICATION 007-221-01 LATEST REVISION
5 PLACE REINFORCING BARS IN 4 CORNERS OF THE CONCRETE WHERE SPACERS ARE USED
6 ON COLD JOINT CONCRETE POUR USE #5 REBAR
7 LENGTH OF REBAR FOR SPACER ANCHOR WILL VARY PER DUCT BANK HEIGHT

2 THREE PHASE DUCKBANK FEEDER (BASED ON DISTRIBUTION STANDARD DLFS2C)

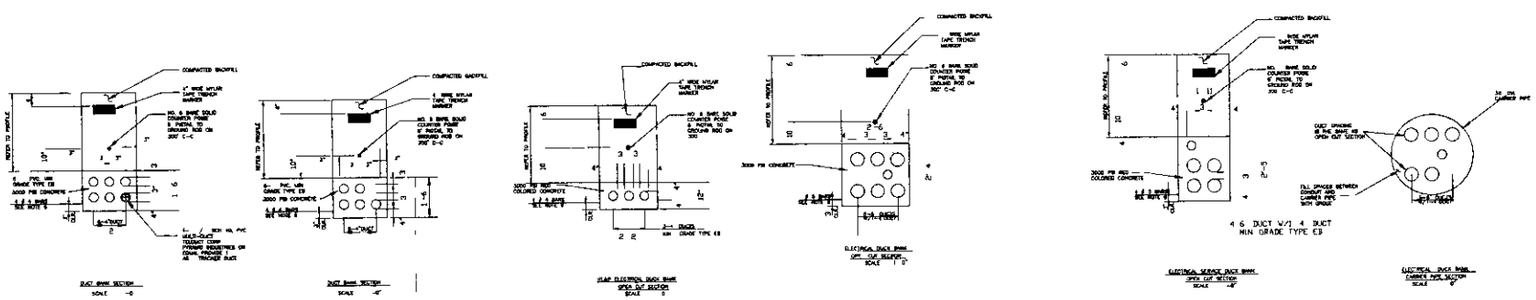

CENTER POINT ENERGY DETAILS
NTS

BENCHMARK

NOTES

James E Thompson
James E. Thompson & Associates
MEP Consulting Engineers
1100 County Road 136A
Alvin, Texas 77511
TBPE FIRM F-1388

DATE	REVISION	BY

SANTA FE HIGH SCHOOL

PERMANENT EMERGENCY GENERATOR

CENTERPOINT ENERGY DETAILS

LJA Engineering & Surveying, Inc.
2929 Briarpark Drive
Suite 600
Houston, Texas 77042
Phone 713.953.5200
Fax 713.953.5026
FRN F-1386

LJA PROJECT NO 0384 9003E

DRAWN _____ DESIGN _____ DATE APR 2011

SCALE E-4

SHEET NO OF

EMERGENCY GENERATOR FOR SANTA FE HIGH SCHOOL PROJECT NO 0384-9003E

MHC DIESEL FUEL DISPENSING PACKAGE

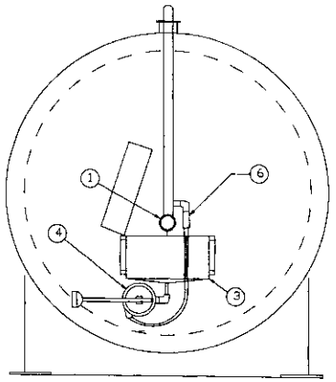

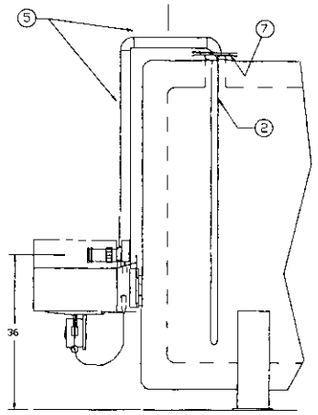

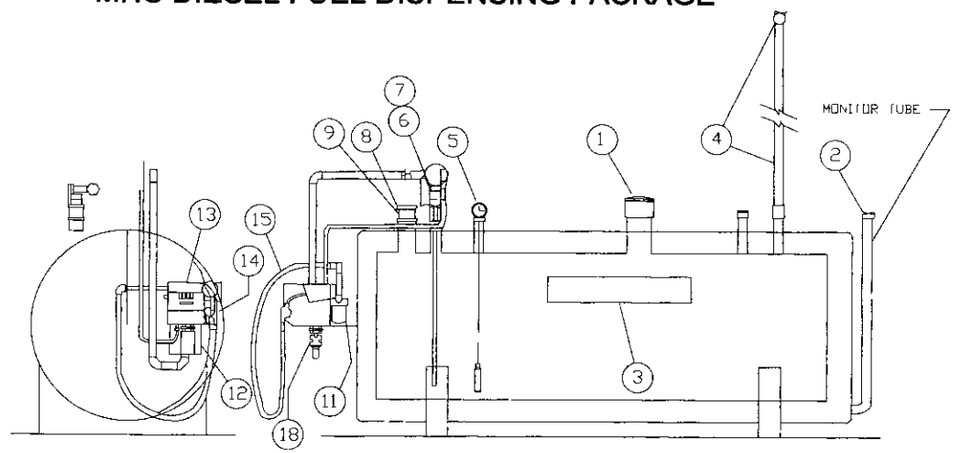

END VIEW

SIDE VIEW

NOTES:

- THE GROUND LEVEL FILL SYSTEM ALLOWS THE TANK TO BE FILLED FROM THE GROUND THIS ELIMINATES THE NEED FOR TANK TOP ACCESS MAKING THE TANK EASIER TO USE AND REDUCING THE POSSIBILITY OF ACCIDENTS
- THE DRY BREAK ADAPTOR IS A POPPETED CHECK VALVE WHICH PREVENTS SPILLS OR RISER PIPE DRAINBACK UPON DISCONNECT
- THE DROP TUBE HAS A BUILT IN ANTI-SIPHON FEATURE IN ACCORDANCE WITH THE UNIFORM FIRE CODE REQUIREMENT FOR PIPING WHICH EXTENDS BELOW THE TOP OF THE TANK
- THE SPILL CONTAINMENT PAN COMPLIES WITH APPENDIX II-F OF THE UNIFORM FIRE CODE

MATERIAL LIST

1 DRY-BREAK STYLE CAMLOCK ADAPTOR

2 DROP TUBE WITH ANTI-SIPHON FEATURE

3 SPILL CONTAINMENT PLA 16 GAL CAP

4 SPILL CONTAINMENT PAN HAND PUMP

5 ALL WELDED UNITIZED CONSTRUCTION (AVAILABEL IN 2 & 3 PIPE SIZE)

6 FUEL RETURN SWING CHECK VALVE

7 FLANGE ADAPTOR

SUPERVAULT MH GROUND LEVEL FILL SYSTEM

WITH SPILL PAN & HAND PUMP NO VAPOR-RECOVERY

COMPONENT DESCRIPTION	PARTS NUMBER *
1 EMERGENCY VENT	MORRISON 244M SERIES LS
2 MONITOR TUBE SAFETY CAP	MORRISON / 678XA
3 DECAL KIT	TTI / 7305
4 VENT WITH RISER	DPW / 23, 2"
	2" GALVANIZED PIPE SCHEDULE 40
5 LEVEL GAUGE	MORRISON CLOCK GAUGE
6 DOUBLE TAP BUSHING WITH SUCTION TUBE	MORRISON 184 SERIES
	SCHEDULE 40 PIPE
7 SUCTION PUMP	FILL RITE 313
8 TOP SEAL CAP	DPW / 634-TT-7085, 4"
9 TOP SEAL ADAPTOR	DPW / 633-T-8075, 4
10 FILTER ADAPTOR	CIM-TEK / 200H-3-4
11 FILTER ELEMENT	CIM-TEK / 300HS10
12 TANK END PUMP MOUNTING ASSEMBLY	TTI / 7235
13 DISPENSER WITH METER AND HOOK	FILL-RITE 305
14 NOZZLE	DPW / 11A (DIESEL)
15 HOSE ASSEMBLY	THERMOID / 1481-12, 3/4 x 12
16 MONITOR TUBE SAFETY CAP	MORRISON / 678XA
17 MAINTENANCE VALVES	3/4" BRASS BALL VALVE
18 EMERGENCY SHUTOFF VALVE	MORRISON 636

NOTES 1 THE EQUIPMENT PACKAGE IS INSTALLED WITH ALL PIPING UNIONS ELBOWS TEES AND COUPLINGS SHOWN PIPING BEYOND THE FITTINGS SHOWN IS THE RESPONSABILITY OF THE PURCHASER AN OPTIONAL HOSE RETRACTOR MAY BE ADDED TO THIS SYSTEM

SUPERVAULT MH DIESEL FUEL DISPENSING SYSTEM

BENCHMARK

NOTES

James E Thompson

DATE	REVISION	BY

SANTA FE HIGH SCHOOL

PERMANENT EMERGENCY GENERATOR

FUEL SYSTEMS

LJA Engineering & Surveying, Inc.
2929 Briarpark Drive
Suite 600
Houston, Texas 77042
Phone 713.953.5200
Fax 713.953.5026
FRN F-1386

LJA PROJECT NO 0384 9003E

DRAWN ____ DESIGN ____ DATE APR 2011

SCALE

E-5

SHEET NO OF

EMERGENCY GENERATOR FOR SANTA FE HIGH SCHOOL - PROJECT NO 0384-9003E

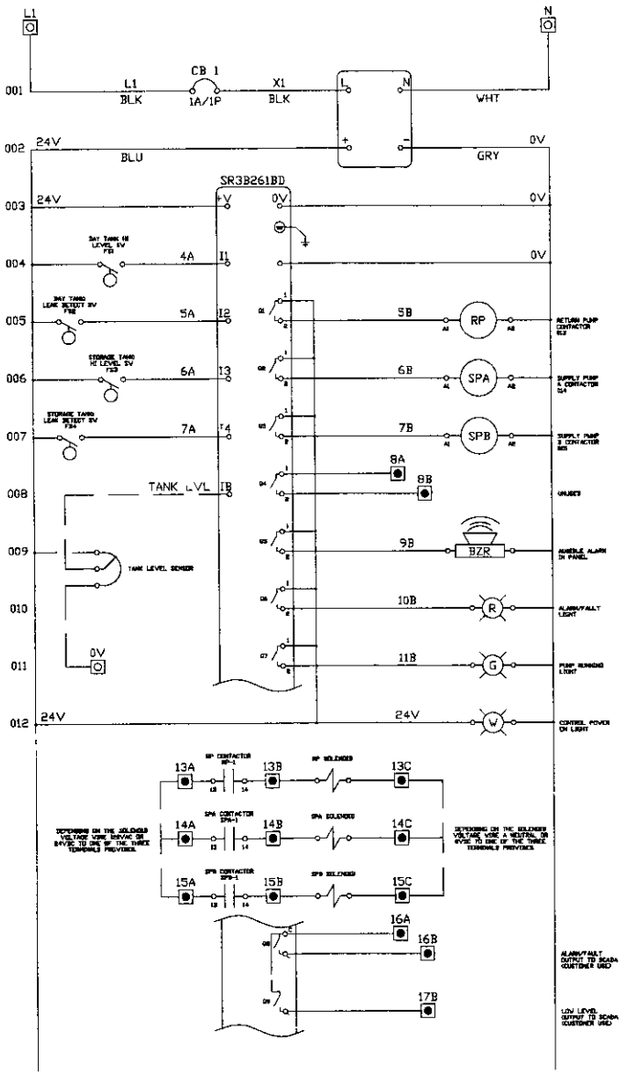

EXTERNAL FUEL TANK SCHEMATIC

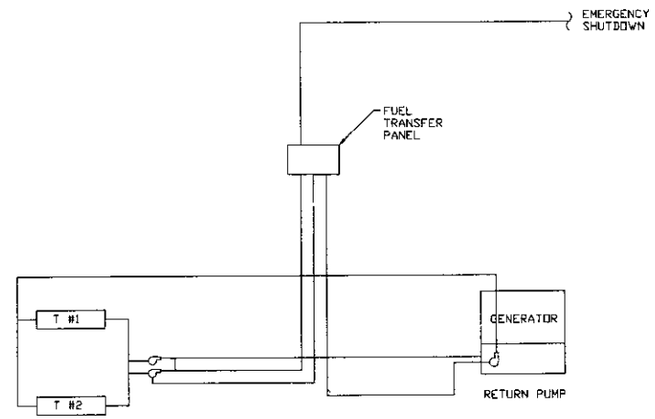

EXTERNAL FUEL TANK BLOCK DIAGRAM

BENCHMARK

NOTES

James E. Thompson

DATE	REVISION	BY

SANTA FE HIGH SCHOOL

PERMANENT EMERGENCY GENERATOR

FUEL SYSTEMS

LJA Engineering & Surveying, Inc.
2929 Briarpark Drive
Suite 600
Houston, Texas 77042
Phone 713.953.5200
Fax 713.953.5026
FRN F-1386

LJA PROJECT NO : 0384 9003E

DRAWN _____ DESIGN _____ DATE APR 2011

SCALE E-6

SHEET NO OF

EMERGENCY GENERATOR FOR SANTA FE HIGH SCHOOL - PROJECT NO 0384-9003E

8

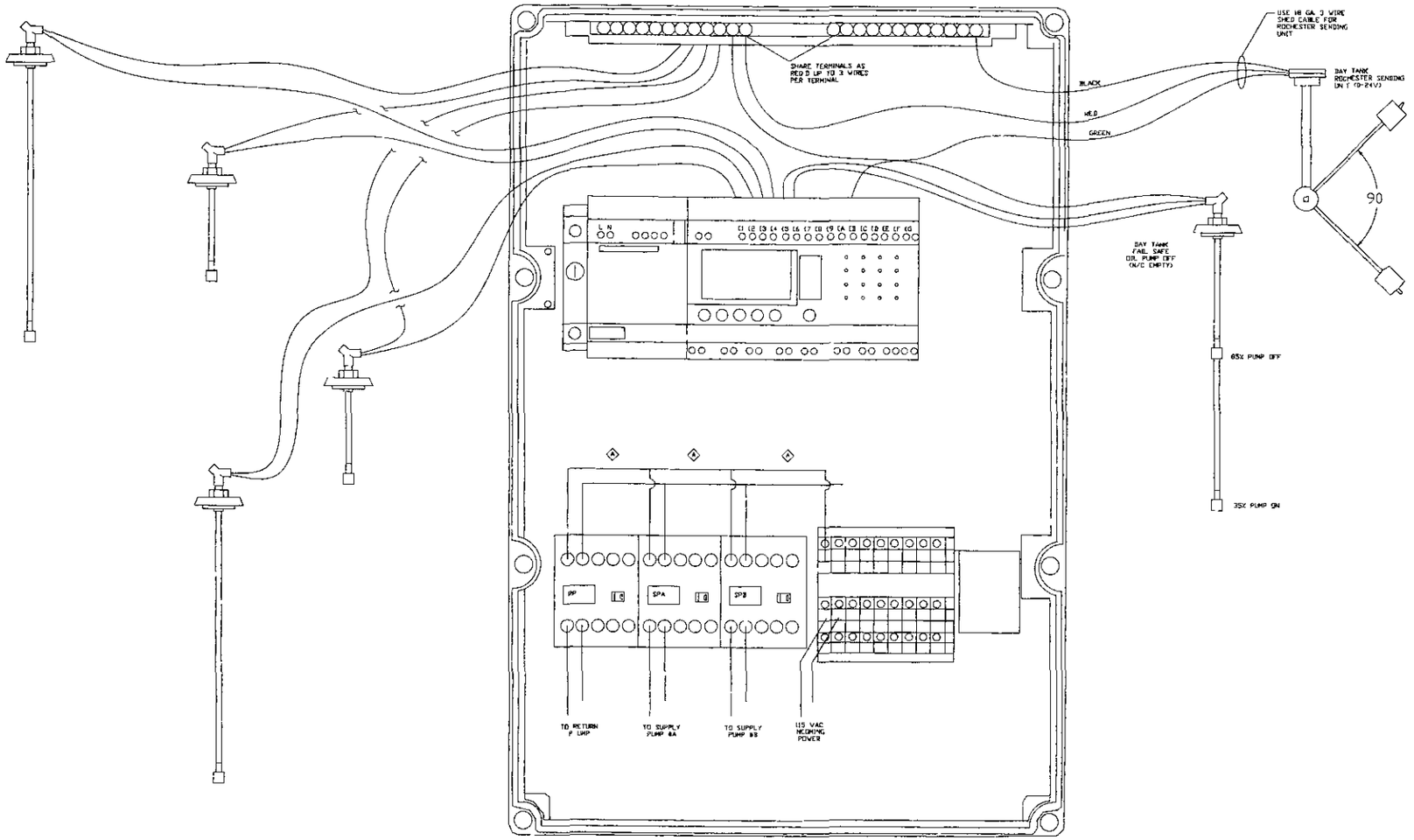

BENCHMARK.

NOTES

JAMES E. THOMPSON, JR.
70302
REGISTERED
PROFESSIONAL ENGINEER

James E. Thompson
07-15-11

James E Thompson
James E. Thompson & Associates
MEP Consulting Engineers
1100 County Road 136A
Alvin, Texas 77511
TBPE FIRM # 1300

DATE	REVISION	BY

SANTA FE HIGH SCHOOL

PERMANENT EMERGENCY GENERATOR

FUEL SYSTEMS
CONTROL PANEL

LJA Engineering & Surveying, Inc.
2929 Briarpark Drive
Suite 600
Houston, Texas 77042
Phone 713.953.5200
Fax 713.953.5026
FRN F-1386

LJA PROJECT NO : 0384 9003E

DRAWN _____ DESIGN _____ DATE APR 2011

SCALE E-7

SHEET NO OF

EMERGENCY GENERATOR FOR SANTA FE HIGH SCHOOL - PROJECT NO 0384-9003E

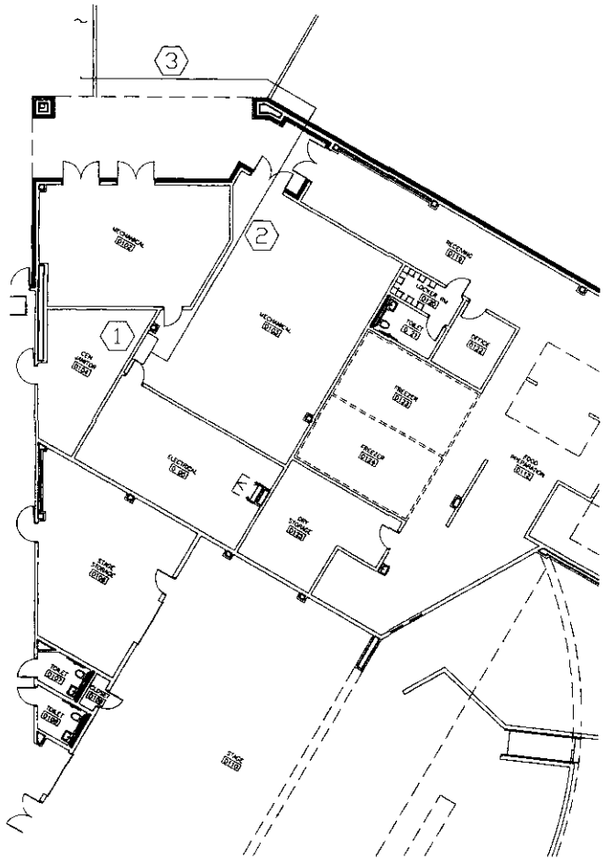

PARTIAL FLOOR PLAN-CENTRAL PLANT

SCALE 1 =10 -0

KEYED NOTES (THIS DETAIL ONLY)

1. EXISTING MOTOR CONTROL CENTER MCC
2. EXISTING OVERHEAD CONDUIT RACK WITH NEW CONDUIT FROM MCC
3. NEW CONDUIT TO BE FIELD-ROUTED TO OVERHEAD TO OUTSIDE THEN UNDERGROUND TO NEW MINI POWER CENTER LOCATED AT NEW GENERATOR

PANEL MIN POWER CENTER CU BUS 10 KAIC FULLY RATED					120/208V 1PH 3W 60A MCB 100A BUS				SURFACE MOUNT NEMA 3R NEUTRAL+GND BUS
NO	DESCRIPTION	LOAD	WIRE	OCP	NO	DESCRIPTION	LOAD	WIRE	OCP
1	ALTER HTR	500	12	20	2	SPACE			
3	BATTERY CHGR	500	12	20	4	SPACE			
5	FUEL SYSTEM	2500	8	40/2	6	SPACE			
7	-	-	8	2P	8	SPACE			
9	SPACE				10	SPACE			
11	SPACE				12	SPACE			
		3500					0		

AMPACITY REQ D=3500/208 X 125= 210 AMPS

GENERATOR MINI-POWER CENTER PANEL SCHEDULE

SCALE NTS

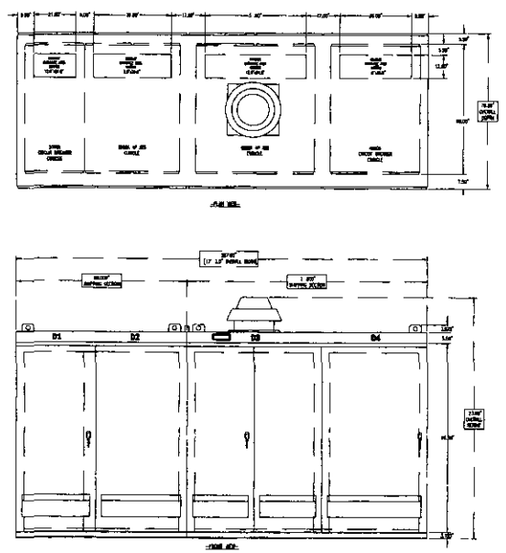

NOTES

1. ENCLOSURES YO BE FABRICATED FROM FORMED CHANNEL FRAMEWORK AND CODE GAUGE SHEET STEEL ALL STEEL PARTS SHALL BE PREPARED FOR PAINTING BY A FIVE STEP CLEANING PHOSPHATIZING AND SEALING PROCESS THE PARTS SHALL THEN BE PAINTED ASA NO 61 GRAY UTILIZING POLYESTER POWDER COATING APPLIED BY THE ELECTROSTATIC METHOD AND CURED IN A BAKING OVEN
2. ALL LUGS TO BE MECHANICAL TYPE SUITABLE FOR CU/AL CABLE
3. SYSTEM VOLTAGE 480/277V 3Ø 4W 60HZ
4. ALL BUS TO BE SILVER PLATED COPPER WITH CARRYING CAPACITY BASED ON NEMA AND U/L STANDARDS
5. THE CALIBRATION AND SETTINGS OF ALL PROTECTIVE DEVICES MUST BE DETERMINED BY A SHORT CIRCUIT AND COORDINATION STUDY PROVIDED BY OTHERS

CONTRACTOR SHALL PROVIDE AN ADDITIONAL PROTECTIVE COAT OF TWO PART EPOXY PAINT ASA-60 SUITABLE FOR COASTAL USE SUBMIT PAINT SELECTION FOR APPROVAL

CIRCUIT NUMBER	TYPE LABEL	MAINBREAKER AMPERES	VOLTAGE	SYSTEM	HZ	SHORT CIRCUIT RATING MVA
[illegible]	[illegible]	[illegible]	[illegible]	[illegible]	[illegible]	[illegible]

SWITCHGEAR SHALL BEAR THE APPROPRIATE U/L LABEL AS LISTED IN THE TABLE ABOVE.

THE SHORT CIRCUIT RATING IS LIMITED TO THE LOWEST SHORT-CIRCUIT RATING OF ANY SWITCHBOARD SECTION CONNECTED IN SERIES. ANY INSTALLED CIRCUIT BREAKER OR FUSED SWITCH ADDITIONAL OR REPLACEMENT DEVICES SHALL BE OF THE SAME MANUFACTURER TYPE DESIGNATION, AND EQUAL OR GREATER SHORT-CIRCUIT RATING OF THE REPLACED DEVICE OR SWITCHBOARD.

CUSTOMER P.O. NO.

REVISION 0	REFERENCE DOCUMENTS		INSTALLATION		TITLE	Powelectric Inc.
	NO	TITLE	SANTA FE HIGH SCHOOL	DFTP JAB 12/07/04	PHYSICAL DETAILS FRONT AND PLAN VIEWS	DWG. 0
		SCHEMATIC DIAGRAMS WIRING DIAGRAMS		CHKD.		REV.
				APPD.		SH.

AUTOMATIC TRANSFER SWITCH OUTLINE DRAWING

SCALE AS NOTED

BENCHMARK

NOTES:

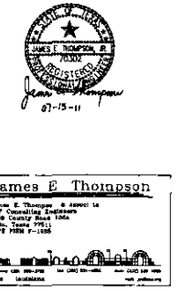

James E Thompson

DATE	REVISION	BY

SANTA FE HIGH SCHOOL

PERMANENT EMERGENCY GENERATOR

MISCELLANEOUS DETAILS/SCHEDULE

LJA Engineering & Surveying, Inc.
2929 Briarpark Drive
Suite 600
Houston, Texas 77042
Phone 713.953.5200
Fax 713.953.5028
FRN F-1386

LJA PROJECT NO # 0384 9003E

DRAWN _____ DESIGN _____ DATE APR. 20 1

SCALE E8 0

SHEET NO OF

EMERGENCY GENERATOR FOR SANTA FE HIGH SCHOOL - PROJECT NO 0384-9003E

AGENDA ITEM #17

P&I Cases for reconsideration

Name	Account #
Chris L Johnson	1999-0001-0006-000
LC Partners, LP	4615-0015-0001-000
Robert Meek	1406-0010-0302-000
James H Yates	5191-0000-0001-000
Tommy Thompson	4502-0003-0008-000
Liaw Mean-Liang & Yong-Fang Kuo	7702-0008-0004-000
Roger W Peters	1647-0005-0036-000
Roger W Peters	1647-0005-0037-000
Edward Bajorek	7146-0000-0022-001
Edward Bajorek	7146-0000-0021-000

AGENDA ITEM #18

2012045139

4 PGS

HOME OFFICE
2100 FLEUR DRIVE
DES MOINES, IOWA 50321-1158
(515) 243-8171
FAX (515) 243-3854

MERCHANTS BONDING COMPANY

AUSTIN OFFICE
P O BOX 26720
AUSTIN, TEXAS 78755
(512) 343-9033
FAX (512) 343-8363

TEXAS OFFICIAL BOND AND OATH FOR JUSTICE OF THE PEACE

THE STATE OF TEXAS

County of Galveston

Bond No TX 637506

KNOW ALL PERSONS BY THESE PRESENTS

That we, Miles M Whittington, Sr, as Principal, and the MERCHANTS BONDING COMPANY (Mutual), a corporation duly licensed to do business in the State of Texas, as Surety, are held and firmly bound unto the County Judge of the County of Galveston State of Texas, his/her successors in office, in the sum of Five Thousand and No/100*** ($5,000 00***)

THE CONDITION OF THE ABOVE OBLIGATION is such, that, whereas, the above bounden Principal was on the 18th day of June, 2012, duly appointed to the office of Justice of the Peace in and for Galveston County in the State of Texas, for a term commencing on the 18th day of June, 2012 and expiring on the 31st day of December, 2014

Now, therefore, if the said Principal shall faithfully and impartially discharge the duties required by law and promptly pay to the entitled party all money that comes into his/her hands during the term of office, then this obligation to be void, otherwise to remain in full force and effect

PROVIDED, HOWEVER, that regardless of the number of years this bond may remain in force and the number of claims which may be made against this bond, the liability of the Surety shall not be cumulative and the aggregate liability of the Surety for any and all claims, suits, or actions under this bond shall not exceed the amount stated above Any revision of the bond amount shall not be cumulative

PROVIDED, FURTHER, that this bond may be canceled by the Surety by sending written notice to the party to whom this bond is payable stating that, not less than thirty (30) days thereafter, the Surety's liability hereunder shall terminate as to subsequent acts of the Principal

Dated this 18th day of June, 2012

Miles M Whittington, Sr
Principal
By Miles M Whittington

Merchants Bonding Company (Mutual)
By Mark Smith
Mark Smith, Attorney-in-Fact

CAROLYN BRANCH
NOTARY PUBLIC
STATE OF TEXAS
MY COMMISSION EXPIRES
OCTOBER 29, 2013

ACKNOWLEDGEMENT OF PRINCIPAL

THE STATE OF TEXAS

County of Galveston

Before me, Carolyn Branch, a notary public, on this day personally appeared Miles Whittington known to me to be the person whose name is subscribed to the foregoing instrument, and acknowledged to me that he/she executed the same for the purposes and consideration therein expressed

Given under my hand and seal of office, at

this 25th day of July, 2012

Galveston County, Texas

PO 0157 TX (11/10)

OATH OF OFFICE
(General)

I, _____, do solemnly swear (or affirm) that I will faithfully execute the duties of the office of _____, of the State of Texas, and will to the best of my ability preserve, protect, and defend the Constitution and laws of the United States and of this State, and I furthermore solemnly swear (or affirm) that I have not directly nor indirectly paid, offered, or promised to pay, contributed, nor promised to contribute any money, or valuable thing, or promised any public office or employment, as a reward for the giving or withholding a vote at the election at which I was elected So help me God

Signed _____

Sworn to and subscribed before me at_____, Texas, this_____day of _____, _____

_____

SEAL

_____ _____County, Texas

THE STATE OF TEXAS
County of Galveston } ss

The foregoing bond of Miles M. Whittington, Sr. as Justice of the Peace, Precinct 7 in and for Galveston County and State of Texas, this day approved in open Commissioner's Court

ATTEST: Dwight D. Sullivan, County Clerk Date August 21, 2012

By: Brandy Chapman Deputy Clerk Mark Henry County Judge,
Brandy Chapman
County Court Galveston County Galveston County, Texas

THE STATE OF TEXAS
County of _____ } ss

I, _____, County Clerk, in and for said County, do hereby certify that the foregoing Bond dated the _____ day of _____, _____, with its certificates of authentication, was filed for record in my office the _____day of _____, _____, at_____o'clock____ M , and duly recorded the _____ day of _____ , _____, at_____o'clock____ M , in the Records of Official Bonds of said County in Volume _____, on page_____

WITNESS my hand and the seal of the County Court of said County, at office in _____ _____, Texas, the day and year last above written

_____Clerk

By _____ Deputy County Court _____County

MERCHANTS
BONDING COMPANY.

POWER OF ATTORNEY

Know All Persons By These Presents that MERCHANTS BONDING COMPANY (MUTUAL) and MERCHANTS NATIONAL BONDING INC both being corporations duly organized under the laws of the State of Iowa (herein collectively called the Companies') and that the Companies do hereby make constitute and appoint individually

A A Shotwell, Betty A Bush, Donna Weinel, G C Blystone Jr, Joseph C Blackshear Jr, Mark Smith, Patsy Beall

of Texas City and State of TX their true and lawful Attorney-in-Fact with full power and authority hereby conferred in their name place and stead to sign execute acknowledge and deliver in their behalf as surety any and all bonds undertakings recognizances or other written obligations in the nature thereof subject to the limitation that any such instrument shall not exceed the amount of

FIFTEEN MILLION ($15,000,000 00) DOLLARS

and to bind the Companies thereby as fully and to the same extent as if such bond or undertaking was signed by the duly authorized officers of the Companies and all the acts of said Attorney-in-Fact pursuant to the authority herein given are hereby ratified and confirmed

This Power-of-Attorney is made and executed pursuant to and by authority of the following By-Laws adopted by the Board of Directors of the Merchants Bonding Company (Mutual) on April 23 2011 and adopted by the Board of Directors of Merchants National Bonding Inc on October 24 2011

The President Secretary Treasurer or any Assistant Treasurer or any Assistant Secretary or any Vice President shall have power and authority to appoint Attorneys-in-Fact and to authorize them to execute on behalf of the Company and attach the seal of the Company thereto bonds and undertakings recognizances contracts of indemnity and other writings obligatory in the nature thereof

The signature of any authorized officer and the seal of the Company may be affixed by facsimile or electronic transmission to any Power of Attorney or Certification thereof authorizing the execution and delivery of any bond undertaking recognizance or other suretyship obligations of the Company and such signature and seal when so used shall have the same force and effect as though manually fixed "

In Witness Whereof the Companies have caused this instrument to be signed and sealed this 1st day of January 2012

MERCHANTS NATIONAL BONDING, INC. INCORPORATED -o- 2003

MERCHANTS BONDING COMPANY (MUTUAL) INCORPORATED -o- 1933

MERCHANTS BONDING COMPANY (MUTUAL)
MERCHANTS NATIONAL BONDING, INC

By Larry Taylor
President

STATE OF IOWA
COUNTY OF POLK ss

On this 1st day of January 2012 before me appeared Larry Taylor to me personally known who being by me duly sworn did say that he is President of the MERCHANTS BONDING COMPANY (MUTUAL) and MERCHANTS NATIONAL BONDING INC , and that the seals affixed to the foregoing instrument is the Corporate Seals of the Companies and that the said instrument was signed and sealed in behalf of the Companies by authority of their respective Boards of Directors

In Testimony Whereof I have hereunto set my hand and affixed my Official Seal at the City of Des Moines Iowa the day and year first above written

MARANDA GREENWALT
Commission Number 770312
My Commission Expires
October 28, 2014

Maranda Greenwalt
Notary Public Polk County Iowa

STATE OF IOWA
COUNTY OF POLK ss

I, William Warner Jr Secretary of the MERCHANTS BONDING COMPANY (MUTUAL) and MERCHANTS NATIONAL BONDING INC do hereby certify that the above and foregoing is a true and correct copy of the POWER-OF-ATTORNEY executed by said Companies which is still in full force and effect and has not been amended or revoked

In Witness Whereof I have hereunto set my hand and affixed the seal of the Companies on this 18th day of June 2012

MERCHANTS NATIONAL BONDING, INC. INCORPORATED -o- 2003

MERCHANTS BONDING COMPANY (MUTUAL) INCORPORATED -o- 1933

William Warner Jr
Secretary

POA 0014 (11/11)

FILED AND RECORDED

OFFICIAL PUBLIC RECORDS

2012045139

August 21, 2012 04 49 23 PM

FEE $0 00

Dwight D Sullivan, County Clerk

Galveston County, TEXAS

AGENDA ITEM #19

COUNTY OF GALVESTON

On this, the 21st day of August 2012, the **Commissioners Court of Galveston County, Texas** convened in a regularly scheduled meeting with the following members thereof present

Mark Henry, County Judge;
Patrick F Doyle, Commissioner, Precinct No. 1,
Kevin D. O'Brien, Commissioner, Precinct No 2,
Stephen D. Holmes, Commissioner, Precinct No. 3,
Kenneth Clark, Commissioner, Precinct No. 4; and
Dwight D Sullivan, County Clerk

when the following proceedings, among others, were had, to-wit

A Resolution Recognizing the Exemplary Work of DSW Homes

Whereas, on September 13, 2008 the Gulf Coast was devastated by the impact of Hurricane Ike resulting in long lasting, crippling effects upon Galveston County Residents and

Whereas, many residents lost their homes to the ravages of hurricane force winds and a surge which carried the gulf waters inland, and

Whereas, DSW Homes, a participant in the disaster recovery housing program, came to the aid of our citizens by constructing, reconstructing, and rehabilitating 108 homes damaged by Hurricane Ike, and

Whereas, DSW Homes, with Steve Mataro at the helm, personally touched the lives of Hurricane Ike Victims with kind words and going above and beyond the call of duty, reminiscent of what makes our county extraordinary, and

Whereas, the Great Storm of the 1900 has etched in history books, the trials that Galveston's Coastal Community has experienced, Hurricane Ike will forever be remembered for neighbors helping neighbors and the tireless work of **DSW Homes** and its employees, and

Whereas, DSW Homes has made every effort to ensure that the homes' build is of fitting design and quality so as to improve the neighborhood with aesthetics and structurally sound housing, and

Whereas, DSW Homes continues to be responsive to the needs of the residents of the unincorporated areas of Galveston County including Bayou Vista, Clear Lake Shores, Dickinson, Friendswood, Hitchcock, Jamaica Beach, Kemah, LaMarque, League City, Santa Fe, Texas City, Freddiesville, San Leon, Bacliff, Crystal Beach, Gilchrist, Bolivar, Bayshore and Tiki Island

Now, Therefore, be it Resolved by the Commissioners Court of Galveston County, Texas that **DSW Homes be** recognized for its experience, capacity to perform and the service it has provided to the community

Upon Motion Duly Made and Seconded, the Above Resolution was unanimously passed on this the 21st day of August 2012

Attest

Dwight D. Sullivan, County Clerk

Patrick F Doyle, Comm , Pct #1

Kevin D. O'Brien, Comm., Pct #2

County of Galveston, Texas

By:

Mark Henry, County Judge

Stephen D. Holmes, Comm., Pct #3

Kenneth Clark, Comm., Pct #4

AGENDA ITEM #20

The Boogie, Blues and Brews Festival is requesting a Boat Ramp Closure at Walter Hall Park in League City for Friday-Sunday, September 21-23, 2012 due to the event taking place on those date

We have secured a permit for the park

It is in the public interest to post the closure prior to the event The park will be closed to traffic on these dates which will blocks access to the ramp

Thank you for your consideration

Annabelle Ruch

Director of Site Operations

Annabelle Ruch

All Points Productions

1312 Live Oak Suite 104

Houston, TX 77003 Cell - 832-771-7661

Boogie, Blues & Brews

Sept 21-23, 2012 - League City, TX

boogiebluesandbrews com

AGENDA ITEM #21a

0LINEBARGER GOGGAN BLAIR & SAMPSON, LLP
ATTORNEYS AT LAW
OFFICE ADDRESS 518 – 9TH AVENUE NORTH, TEXAS CITY, TX 77590-6317
MAILING ADDRESS P. O. DRAWER 2789, TEXAS CITY, TEXAS 77590-2789
409/948-3401
FAX 409/945-9814

Brent Richbook, Partner

Mark E Ciavaglia, Managing Partner
Mark Ciavaglia@publicans com

RECEIVED
AUG 09 2012
GALVESTON COUNTY JUDGE

August 7, 2012

Ms Renelle Lopez
Commissioner's Court
Galveston County Courthouse
722 Moody
Galveston, TX 77550

RE **Bid on Galveston County Tax Foreclosed Resale Properties**
Has Not Been Approved By Commissioner's Court
Grantee Mike Gioffre
Tax Accoount # 2597-0002-0028-000 Cause #08TX0210

Dear Ms Lopez,

We have received an offer on a Tax Foreclosed Property for which the County of Galveston is the Trustee This offer was reviewed by the other taxing entities and they have approved the sale Please schedule this for review by the Commissioner's Court Attached for the Commissioner's reference is a copy of the Bid Analysis, Proceeds Distribution Form, Bid Form, Galveston CAD Property Information and CAD Tax Map

If this sale is approved, please have Judge Mark Henry sign the enclosed Trustee's Deed Also enclosed is Cashier's Check #161015 in the amount of $36 00 for recording the deed once it is signed

If you have any questions, please give me a call

Best regards,

Judy A. Fuller
Executive Administrative Assistant to
Mark E Ciavaglia

JF encls

TAX FORECLOSURE SALE BID ANALYSIS

Galveston County, Trustee

PROPERTY DESCRIPTION

LEGAL DESCRIPTION: Lot 28, Block 2, Clear Creek Heights Section 3, League City, Galveston County, Texas

LOCATION: 1817 Oriole Dr., League City, TX 77573

CAD ACCOUNT #: 2597-0002-0028-000

Land NHS $18,360
Imp NHS $ 0

JUDGEMENT INFORMATION

DATE SHERIFF'S SALE: 03/02/10

REDEMPTION EXPIRES: EXPIRED

CAUSE # 08TX0210

STYLED: County of Galveston, et al. vs. Rufus J. Morris, et al.

DATE DEED RECORDED: 06/11/10

RECORDING REFERENCE: 2010028037

COSTS:

GRAND TOTAL/JUDGEMENT AMT: $ 13,710.71

TAX RESALE INFORMATION

BID AMOUNT: $4,750.00

NAME OF BIDDER: Mike Gioffre
1256 Sail Fish
Bayou Vista, TX 77363

8TX: 216

BID FORM
FOR TAX FORECLOSED PROPERTY

I (We), DOYLE ALFREY hereby declare and certify that

(A) I (We) are the Bidder(s) for the following property

CAD Property # R136961 (1817 ORIOLE DR) 2547-0002-0028 000, described as follows

ABST 3 PAGE 3 LOT 28 BLK 2 CLEAR CREEK HEIGHTS SEC 3

(B) Bid amount $ 4,750 xx

Enclosed is my (our) bid deposit, a Cashier's check in the amount of $ 475 00, which is ten percent (10%) of my (our) bid Payment in full must be made within thirty (30) days of final award of bid or bidder will forfeit bid deposit

(C) I (We) agree that each of the taxing entities made a party to the foreclosure have the right to reject any or all bids and waive any formality in the bidding No title insurance or surveys will be provided Property is being sold "as is", "where is" and "without warranty"

(D) By my signature below, I certify that I understand the conditions and limitations of this sale I further understand that the "minimum bid" amount may not include other taxes which were not included in the judgment and that I will be responsible for those taxes if I am the successful bidder I agree to indemnify the taxing entities and its agents from any action or damages arising from the purchase of this property

(E) I/We acknowledge that properties sold pursuant to this sealed bid sale are sold in satisfaction of all taxes, penalties, interests, costs and fees included in the judgment rendered in the delinquent tax lawsuit, as referenced in the column entitled 'Cause #' Taxes for tax years not included in the judgment must be paid by the purchaser of the property in addition to the successful bid amount.

Mike Gioffre
DOYLE ALFREY
*Bidder(s) printed name [if individual(s)]

Bidder(s) Signature(s) [if individuals(s)]

*Bidder's printed name [if an entity]

Authorized signature [on behalf of entity]

1256 Sail Fish
1801 ORIOLE
*Address

832-425-0340 (MG)
832 830-7643 (DA)
Phone Number / Fax Number

Bacyou Vista, TX 77363
LEAGUE CITY, TX 77573
*City/State/Zip Code

DOYLE@UNCOMMONCONSTRUCTION.NET
Email Address

*** as it will appear on the Deed**

March 27, 2012

RE: Lot 28, Block 2, Clear Creek Heights (1817 Oriole Dr) League City, TX 77573

To Whom It May Concern

My name is Doyle Alfrey We live on the same street as the lot we are looking to purchase The lot in reference at this time is an eye sore and severely needs cleaned up We would like to purchase this lot for possible future development of a new home.

We live at 1809 Oriole Drive The lot next door was purchased recently for $4,800.00 in clean condition, ready for development. 1817 Oriole Drive (lot in reference) has a pre-existing slab that would need to be removed, as well as tree trimming and root removal in the area needed to build a home in the future at an additional cost above the purchase price

Please consider this information when considering our bid Thank you in advance for your time

Thank you,

Doyle Alfrey
832 830 9643
1809 Oriole Drive
League City, TX 77573

Encl. photo of property at 1817 Oriole Dr, League City, TX 77573

0072047 | 11 24
Office AU # | 1210(8)

PERSONAL MONEY ORDER

7204711516

Operator I D tx006714

March 22, 2012

PAY TO THE ORDER OF Galveston County

Four hundred seventy-five dollars and no cents **$475.00**

VOID IF OVER US $ 475 00

Purchaser's Signature

WELLS FARGO BANK, N A
2915 GULF FWY S
LEAGUE CITY TX 77573
FOR INQUIRIES CALL (480) 394-3122

⑈7204711516⑈ ⑆121000248⑆4861 505733⑈

No. 161016

AmegyBank of Texas
AMEGY BANK N A
PO BOX 27459 HOUSTON, TEXAS 77227-7459

Notice to Purchaser As a condition to this Institution's issuance of this check Purchaser agrees to provide an Indemnity Bond prior to the refund or replacement of this check in the event it is lost, misplaced, or stolen

35 1125/1130

PURCHASER MICHAEL GIOFFRE

Void if over $4 275 00

PAY EXACTLY $4,275.00

Four Thousand Two Hundred Seventy Five Dollars and Zero Cents

DATE 7/17/2012

AMOUNT $4,275.00

PAY TO THE ORDER OF COUNTY OF GALVESTON

CHECKS OVER $25,000 00 MUST HAVE 2 SIGNATURES

Kay Yeager
MP AUTHORIZED SIGNATURE

⑈161016⑈ ⑆113011258⑆ ⑈1901125⑈

THIS DOCUMENT CONTAINS A TRUE WATERMARK - HOLD TO LIGHT TO VIEW

AmegyBank of Texas
AMEGY BANK N A
PO BOX 27459 HOUSTON TEXAS 77227-7459

CASHIER'S CHECK

No. 161015

Notice to Purchaser As a condition to this Institution s issuance of this check, Purchaser agrees to provide an Indemnity Bond prior to the refund or replacement of this check in the event it is lost, misplaced, or stolen

35 1125/1130

PURCHASER MICHAEL GIOFFRE

Void if over $36 00

PAY EXACTLY $36.00

Thirty Six Dollars and Zero Cents

DATE 7/17/2012

AMOUNT $36.00

PAY TO THE ORDER OF GALVESTON CITY CLERK

CHECKS OVER $25,000 00 MUST HAVE 2 SIGNATURES

Kay Yeager
MP AUTHORIZED SIGNATURE

⑈161015⑈ ⑆113011258⑆ ⑈1901125⑈

Galveston Central Appraisal District

9850 Emmett F Lowry Expressway Ste A, Texas City TX 77591, (866) 277-4725
Data on this Web site represents PRELIMINARY 2012 Information-CLICK HISTORY FOR VALUE

Home
General Information
News
FAQ
Searches
- Property ID Search
- Account Search
- Owner Search
- Address Search

Property Data
- Detail Sheet
- History
- Datasheet

Other
- Taxing Units
- Neighborhoods
- Abstracts
- Subdivisions
- ONLINE Protest Info
- New Homestead Info
- Tax Code
- Calendar
- Property Codes
- County Tax Rates
- PROTEST VIDEO
- Forms
- GIS Map Viewer
- County Tax Office
- GIS Shape Files
- PDF Map Index
- 3D Aerial Photos
- Links
- Website Feedback Form
- 2011 Certified Roll

Property Detail Sheet (R136961)

History Plat Map GIS Map Datasheet Protest

Owner Information

Owner ID	O407483
Owner Name	COUNTY-GALVESTON
Owner Address	722 MOODY AVE GALVESTON,TX 77550-2317
Property Address	1817 ORIOLE DR LEAGUE CITY, TX 77573

Parcel Information

Legal Description	ABST 3 PAGE 3 LOT 28 BLK 2 CLEAR CREEK HEIGHTS SEC 3
Neighborhood	2597(2597 - Clear Creek Heights Sec 3)
Acreage	0 117
Cross Reference	2597-0002-0028-000
Undivided Interest	100%
Exemption Codes	EX (Exempt Property)
Entity Codes	GGA (Galveston County) S16 (Clear Creek Isd) RFL (Co Road & Flood) C40 (League City)
Deed Type	Sheriff's Deed
Deed Book	
Deed Page	2010028037
Map Page	142-C

Click here to view your 2011 certified values and prior history

Land

ID	Type	SPTB	Acres	Market
Land1	RL (Residential Lot)	C9 (Exempt Vacant Lots/tracts)		*Unavailable*

Get Adobe Reader A recent version of Adobe Acrobat Reader is required to view PDF documents Acrobat Reader is a free program available here

2012
R136961

04/03/2012

Current Owner	Legal Description	Exemptions	Market
COUNTY-GALVESTON (O407483) 722 MOODY AVE GALVESTON,TX 77550-2317	ABST 3 PAGE 3 LOT 28 BLK 2 CLEAR CREEK HEIGHTS SEC 3	EX	Unavailable
		Entities	**Assessed**
		GGA, S16, RFL, C40	Unavailable

Situs Address

1817 ORIOLE DR
LEAGUE CITY, TX 77573

Sales

Date	Volume	Page	Seller Name
03/10/2010	2010028037		MORRIS, RUFUS J
09/13/2006	2006062980		REED, CHARLES B & ESSIE B
	2001025069		DU BOSE JAMES S & JOY L
	010-86-1695		FT WORTH MTG CONTRACT

History Information

	2011	2010	2009	2008
Imp HS	$0	$0	-	-
Imp NHS	$0	$0	-	-
Land HS	$0	$0	-	-
Land NHS	$18,360	$18,360	$18,360	$18 360
Ag Mkt	$0	$0	-	-
Ag Use	$0	$0	-	-
Tim Mkt	$0	$0	-	-
Tim Use	$0	$0	-	-
HS Cap	-	-	-	-
Assessed	$18 360	$18,360	$18 360	$18,360

Building Attributes

Construction	Foundation	Exterior	Interior	Roof	Flooring
Heat/AC	**Baths**	**Fireplace**	**Year Built**	**Rooms**	**Bedrooms**

Land Segments

SPTB	Description	Area	Market	Ag Value
C9	Residential Lot	5100F		

Improvements

Type	Description	Area	Year Built	Eff Year	Value

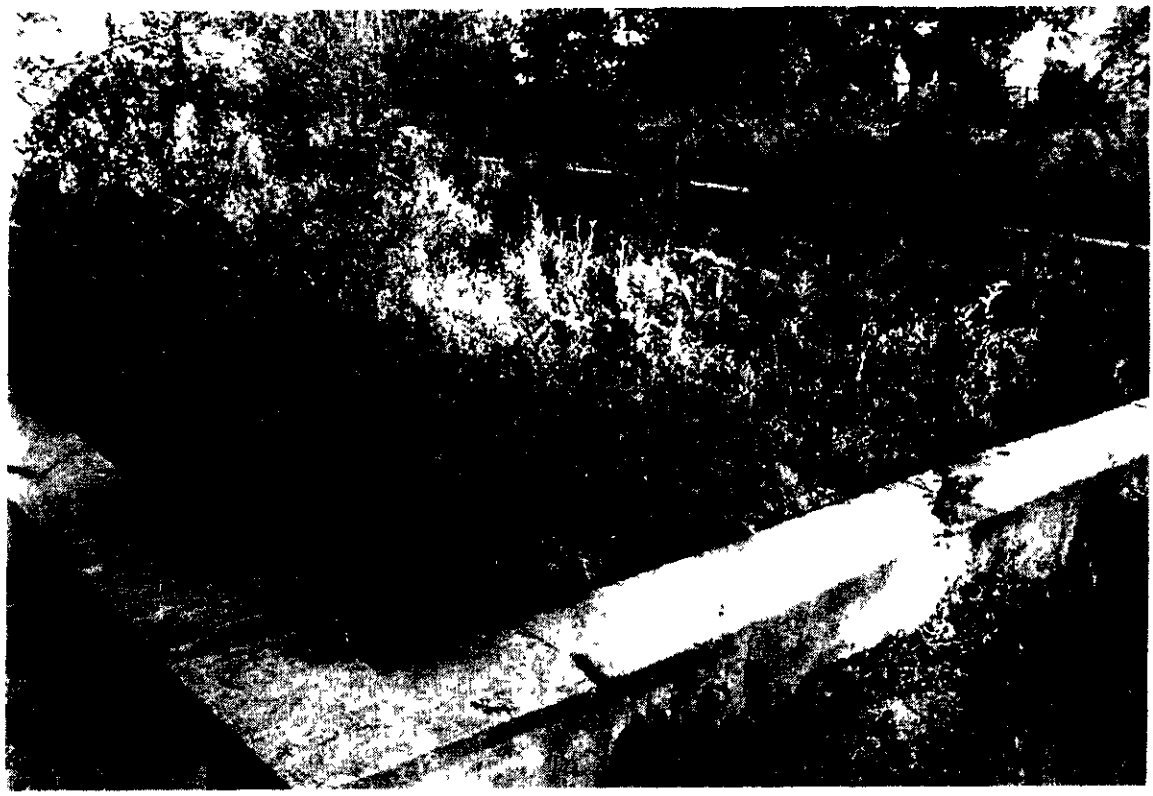

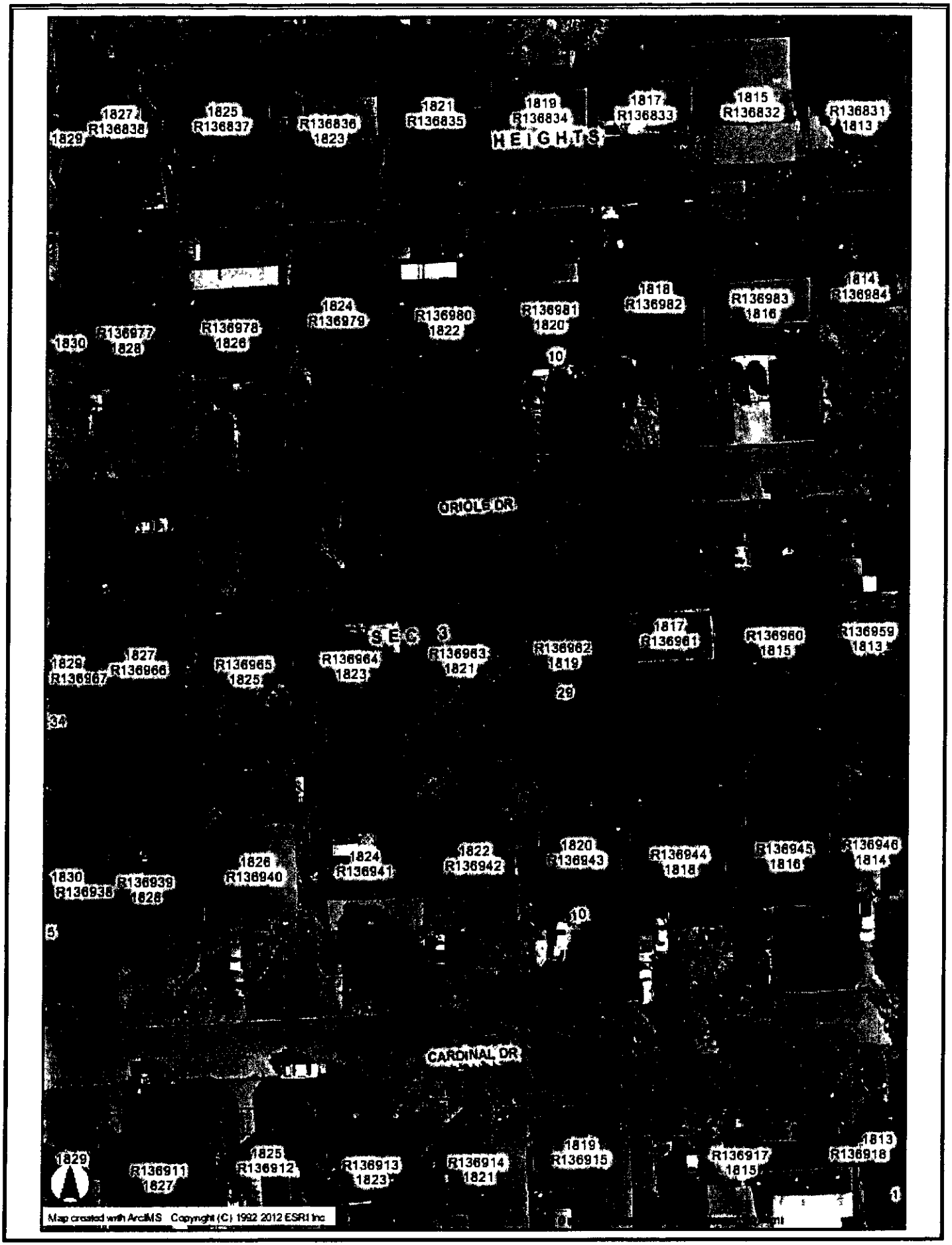

2597-0002-0028-000

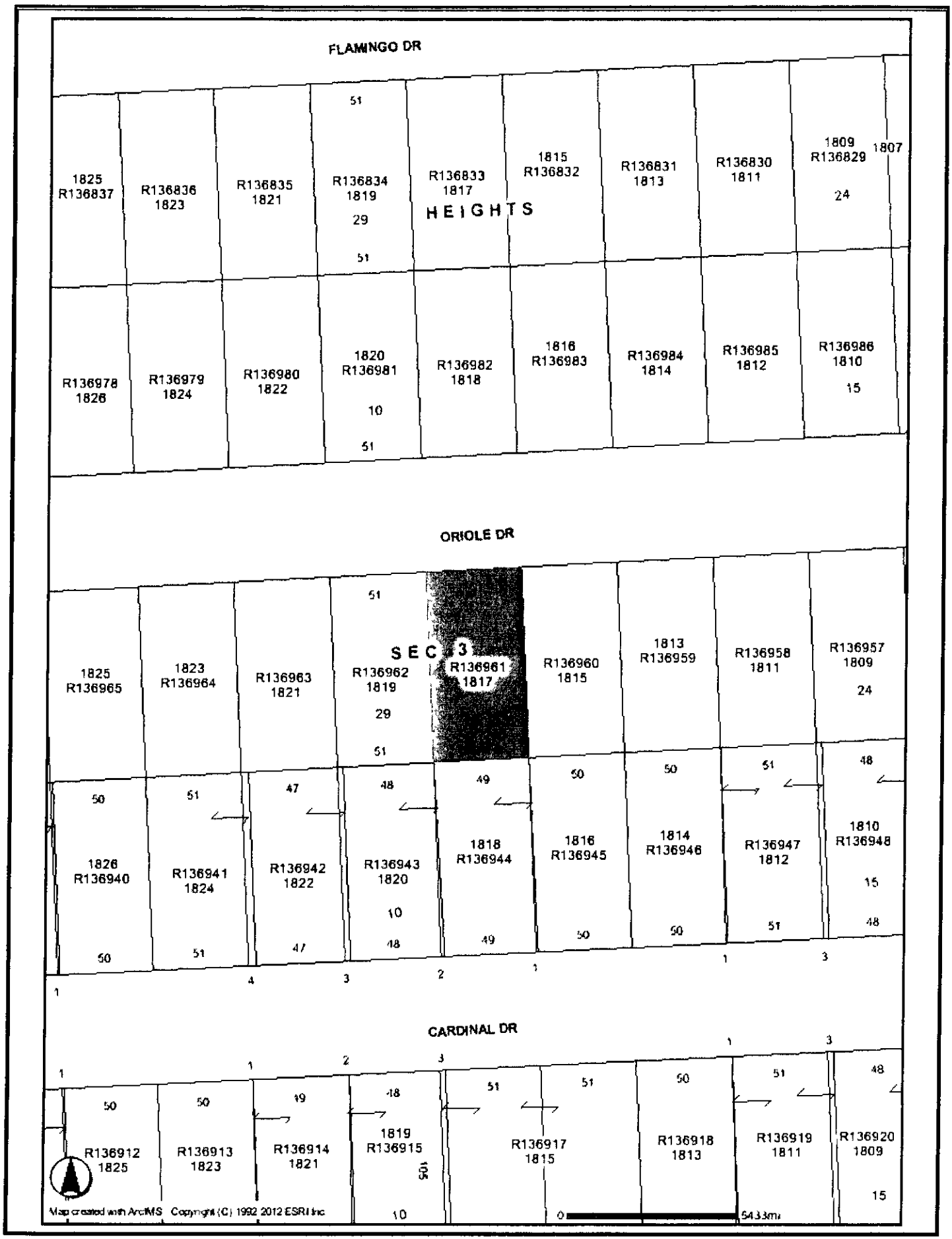

2597-0002-0028-000

RESALE OF PROPERTY

PROCEEDS DISTRIBUTION FORM

Cause Number **08TX0210** on the docket of the **122nd** District Court
COUNTY OF GALVESTON, ET AL. VS. RUFUS J. MORRIS, ET AL.

Property Account Number **2597-0002-0028-000**

Legal Description **LOT TWENTY-EIGHT (28), BLOCK TWO (2), CLEAR CREEK HEIGHTS, SECTION THREE (3), LEAGUE CITY, GALVESTON COUNTY, TEXAS, SAID PROPERTY MORE PARTICULARLY DESCRIBED IN THE INSTRUMENT RECORDED AT CLERK'S FILE NUMBER 2006062980 IN THE OFFICIAL DEED RECORDS OF GALV**

Property Sold at Sheriff's Sale Conducted on MARCH 2, 2010 for **$13,710.71**

Property Re-Sold to to **MIKE GIOFFRE**, of **1256 SAILFISH, BAYOU VISTA, TX 77363** for **$4,750.00**

Proceeds Distribution

Payment of Costs Pursuant to Texas Property Tax Code §34 02	Original Amt Due At Sale	Actual Disbursement
(1) Advertising		
to "Galveston County Sheriff's Dept " (publication costs)	$ 611 90	$ 780 68
(2) Reimbursement - Costs, Fees		
to "Galveston County Clerk" (recording fee #2011019290)	$ -	$ 20 00
(3) Attorney Ad Litem Fees		
to "Richard Branson" P O Box 1534, League City, TX 77574	$ 500 00	$ 500 00
(4) Court Costs		
to "Galveston County District Clerk"	$ 561 00	$ 635 00
(5) Title Search Fees		
to "Lyn Wingert & Associates"	$ 250 00	$ 250 00
(6) Reimbursement - Costs, Fees		
	$ 1,922 90	$ 2,185 68

Taxing Entity Distribution	Proportionate Share	Taxes Due at Original Sale	Resale Share/(Loss)
to "COUNTY OF GALVESTON"	0 1709163122	$ 2,014 73	$ 438 28
to "CLEAR CREEK INDEPENDENT SCHOOL DISTRICT"	0 6472105420	$ 7,629 19	$ 1,659 65
to "CITY OF LEAGUE CITY	0 1818731458	$ 2,143 89	$ 466 38
	Subtotal	$ 11,787 81	$ 2,564 32
	Grand Total	$ 13,710 71	$ 4,750 00

AmegyBank of Texas

AMEGY BANK N A
PO BOX 27459 HOUSTON, TEXAS 77227-7459

CASHIER'S CHECK

Notice to Purchaser As a condition to this Institution's issuance of this check, Purchaser agrees to provide an Indemnity Bond prior to the refund or replacement of this check in the event it is lost, misplaced, or stolen

No. 161015

35-1125/1130

PURCHASER MICHAEL GIOFFRE

Void if over $36 00

DATE 7/17/2012

AMOUNT $36 00

PAY EXACTLY 36.00

Thirty Six Dollars and Zero Cents

PAY TO THE ORDER OF **GALVESTON CITY CLERK**

CHECKS OVER $25,000 00 MUST HAVE 2 SIGNATURES

Kay Yeager

MP AUTHORIZED SIGNATURE

⑈161015⑈ ⑆113011258⑆ ⑈1901125⑈

2012045138

7 PGS

NOTICE OF CONFIDENTIALITY RIGHTS: IF YOU ARE A NATURAL PERSON, YOU MAY REMOVE OR STRIKE ANY OR ALL OF THE FOLLOWING INFORMATION FROM ANY INSTRUMENT THAT TRANSFERS AN INTEREST IN REAL PROPERTY BEFORE IT IS FILED FOR RECORD IN THE PUBLIC RECORDS YOUR SOCIAL SECURITY NUMBER OR YOUR DRIVER'S LICENSE NUMBER

TRUSTEE'S DEED

THE STATE OF TEXAS §
§ KNOW ALL MEN BY THESE PRESENTS
COUNTY OF GALVESTON §

WHEREAS, by Order of Sale, issued by the Galveston County District Court, **122nd** Judicial District in Cause Numbered **08TX0210** styled "**COUNTY OF GALVESTON, ET AL. VS. RUFUS J. MORRIS, ET AL.**" the Sheriff of Galveston County, on JANUARY 25, 2010, seized and levied upon the right, title and interest the defendants had in the premises hereinafter described, and

WHEREAS, the Sheriff on **MARCH 2, 2010**, sold and conveyed the premises to **COUNTY OF GALVESTON**, as Trustee for itself and for **CITY OF LEAGUE CITY and CLEAR CREEK INDEPENDENT SCHOOL DISTRICT** for the sum of **THIRTEEN THOUSAND SEVEN HUNDRED TEN AND 71/100 DOLLARS ($13,710.71)**, it being the highest bidder therefore, and

WHEREAS, the GRANTEE named herein desires to purchase this property for the sum of **FOUR THOUSAND SEVEN HUNDRED FIFTY AND NO/100 DOLLARS ($4,750.00)**, and

WHEREAS, this sale is authorized pursuant to V T C A , Tax Code §34 05(b)

WHEREAS this sale is authorized pursuant to an Interlocal Agreement between **COUNTY OF GALVESTON, CITY OF LEAGUE CITY** and **CLEAR CREEK INDEPENDENT SCHOOL DISTRICT** as permitted under Texas Government Code §791 011, and

WHEREAS the Interlocal Agreement between **COUNTY OF GALVESTON, CITY OF LEAGUE CITY** and **CLEAR CREEK INDEPENDENT SCHOOL DISTRICT** provides that the County Judge of Galveston County will execute Trustee's Deeds on behalf of all taxing entities made a party to the Interlocal Agreement pursuant to offers approved by the Resale Committee under the Interlocal Agreement

NOW, THEREFORE, in consideration of the sum of **FOUR THOUSAND SEVEN HUNDRED FIFTY AND NO/100 DOLLARS ($4,750.00)** paid by the GRANTEE named below, the receipt and sufficiency of which is acknowledged, **COUNTY OF GALVESTON, CITY OF LEAGUE CITY and CLEAR CREEK INDEPENDENT SCHOOL DISTRICT, and ("GRANTOR"),** have GRANTED, SOLD and CONVEYED, and by these presents does GRANT, SELL and CONVEY to **MIKE GIOFFRE**, of **1256 SAILFISH, BAYOU VISTA, TX 77363** ("GRANTEE"), the following described real property, to wit

LOT TWENTY-EIGHT (28), BLOCK TWO (2), CLEAR CREEK HEIGHTS, SECTION THREE (3), LEAGUE CITY, GALVESTON COUNTY, TEXAS, SAID PROPERTY MORE PARTICULARLY DESCRIBED IN THE INSTRUMENT RECORDED AT CLERK'S FILE NUMBER 2006062980 IN THE OFFICIAL DEED RECORDS OF GALVESTON COUNTY, TEXAS

GRANTOR excludes and excepts from this conveyance any warranties, express or implied, on the property, including, without limitation, any warranties arising by common law or Section 5 023 of the Texas Property Code

GRANTOR conveys the property

a) "as is", "with all faults" and without any warranty as to condition or environmental hazard,

b) subject to all restrictions, easements, rights-of-way leases, oil, gas and mineral leases, royalties, mineral conveyances, and mineral reservations of record, if any, in the office of the County Clerk of said County,

c) subject to any right of redemption, and

d) subject to rights of parties in possession

GRANTOR disclaims any warranty, guaranty or representation, oral or written, on

a) the nature and condition of the property or other items conveyed hereunder, including, without limitation, the water, soil and geology,

b) the suitability of the property conveyed hereunder for any and all activities and uses which GRANTEE may elect to conduct thereon,

c) the existence of any environmental hazards or conditions thereon (including but not limited to the presence of asbestos or other hazardous materials),

d) compliance with applicable environmental laws, rules or regulations, and

e) the compliance of the property with any laws, ordinances, or regulations of any governmental entity or body

By acceptance of this deed, GRANTEE acknowledges and agrees

a) that GRANTOR acquired the property through foreclosure of a tax lien as Trustee and as such has little, if any, knowledge of the physical or economic characteristics of the property,

b) GRANTEE has inspected the property and are relying solely on their own investigation of the same and not on any information provided or to be provided by on behalf of GRANTOR,

c) that any information provided with respect to the property was obtained from a variety of sources,

d) GRANTOR (1) has not made any independent investigation or verification of such information, and (2) does not make any representations as to the accuracy or completeness of such information, and

e) that if there are any improvements on the property, GRANTOR shall not be responsible for or liable to GRANTEE for any construction defects, errors, omissions, of any other conditions affecting the property

GRANTEE or anyone claiming by, through or under GRANTEE, hereby fully releases GRANTOR, its employees, officers, directors, representatives, attorneys and agents from any and all claims that it may now have or hereafter acquire against GRANTOR, its respective employees, officers, directors, representatives, attorneys and agents

for any cost, loss, liability, damage, expense, demand, action or cause of action arising from or related to the conveyance of the premises herein as well as any construction defects, errors, omissions, or other conditions affecting the property and other items conveyed hereunder GRANTEE further acknowledges and agrees that this release shall be given full force and effect according to each of its express terms and provisions, including, but not limited to, those relating to unknown and suspected claims, damages and causes of action This covenant releasing GRANTOR shall be a covenant running with the property and shall be binding upon GRANTEE, their heirs, successors, beneficiaries and assigns GRANTOR hereby assigns without recourse or representation of any nature to GRANTEE, effective upon the execution and delivery hereof, any and all claims that GRANTOR may have for any such errors, omissions or defects in the property an other items conveyed hereunder As a material covenant and condition of this conveyance, GRANTEE agrees that in the event of any such construction defects, errors, omissions or on account of any other conditions affecting the property, GRANTEE shall look solely to GRANTOR's predecessors or to such contractors and consultants as may have contracted for work in connection with the property and other items conveyed hereunder for any redress or relief Upon the assignment by GRANTOR of its claims, GRANTEE releases GRANTOR of all right, express or implied, GRANTEE may have against GRANTOR arising our of or resulting from any errors, omissions or defects in the property and other items conveyed hereunder GRANTEE further understands that some of GRANTOR's predecessors in interest may be or become insolvent, bankrupt, judgment-proof or otherwise incapable of responding in damages, and GRANTEE may have no remedy against such predecessors, contractors or consultants

GRANTEE hereby further agrees on behalf of himself and his heirs, successors, beneficiaries and assigns to indemnify, protect, defend, save and hold harmless GRANTOR and GRANTOR's elected and appointed officials, employees, officers, directors, representatives, attorneys and agents from and against any and all debts, duties, obligations, liabilities, suits, claims, demands, cause of action, damages, losses, costs and expenses (including, without limitation, attorneys' fees and expenses and court costs) in any way relating to, connected with or arising out of the property and other items conveyed hereunder or the ownership, leasing, use, operation, maintenance and management thereof from and after the date hereof, including, without limitation, the cost of any removal of hazardous substances or contaminants from the property and other items conveyed hereunder

TO HAVE AND TO HOLD the above described premises together with all and singular the rights and appurtenances thereto in any wise belonging unto GRANTEE, their heirs, and assigns, forever

Taxes for the current year are to be paid by GRANTEE

EXECUTED this the 21st day of August, 2012

COUNTY OF GALVESTON

By _____
County Judge of Galveston County, Texas

STATE OF TEXAS §
§
COUNTY OF GALVESTON §

BEFORE ME, the undersigned authority, on this day personally appeared MARK J HENRY as County Judge of Galveston County, Texas, known to me to be the person whose name is subscribed to the foregoing instrument, and acknowledged to me that he executed the same for the purposes and consideration therein expressed

GIVEN under my hand and seal of office this the 21st day of August, 2012

ROXANA GAIL LEWIS
Notary Public, State of Texas
My Commission Expires
February 14, 2015

_____
NOTARY PUBLIC, in and for the State of Texas

Roxana Lewis
Printed or Typed Name of Notary

TO HAVE AND TO HOLD the above described premises together with all and singular the rights and appurtenances thereto in any wise belonging unto GRANTEE, their heirs, and assigns, forever

Taxes for the current year are to be paid by GRANTEE

EXECUTED this the 3rd day of July, 2012

CITY OF LEAGUE CITY

By _____
(Name)

MAYOR
(Title)

STATE OF TEXAS §
§
COUNTY OF GALVESTON §

BEFORE ME, the undersigned authority, on this day personally appeared Timothy Paulissen as MAYOR of City of League City, known to me to be the person whose name is subscribed to the foregoing instrument, and acknowledged to me that he executed the same for the purposes and consideration therein expressed

GIVEN under my hand and seal of office this the 3rd day of July, 2012

DIANA MARIE STAPP
MY COMMISSION EXPIRES
September 29, 2015

Diana M. Stapp
NOTARY PUBLIC, in and for the State of Texas

DIANA M. STAPP
Printed or Typed Name of Notary

TO HAVE AND TO HOLD the above described premises together with all and singular the rights and appurtenances thereto in any wise belonging unto GRANTEE, their heirs, and assigns, forever

Taxes for the current year are to be paid by GRANTEE

EXECUTED this the 25th day of June, 2012

CLEAR CREEK INDEPENDENT SCHOOL DISTRICT

By _____
(Name)

Board President
(Title)

STATE OF TEXAS §
§
COUNTY OF GALVESTON §

BEFORE ME, the undersigned authority, on this day personally appeared Ken Baliker as Board President of Clear Creek Independent School District, known to me to be the person whose name is subscribed to the foregoing instrument, and acknowledged to me that he executed the same for the purposes and consideration therein expressed

GIVEN under my hand and seal of office this the 25th day of June, 2012

JOLENE M. ENGEL
Notary Public, State of Texas
My Commission Expires
August 5, 2014

NOTARY PUBLIC, in and for the State of Texas

Jolene M. Engel
Printed or Typed Name of Notary

" 1809 Oriole, League City, Tx 77573

FILED AND RECORDED

OFFICIAL PUBLIC RECORDS

2012045138

August 21, 2012 04 42 25 PM

FEE $36 00

Dwight D Sullivan, County Clerk

Galveston County, TEXAS

AGENDA ITEM #21b

LINEBARGER GOGGAN BLAIR & SAMPSON, LLP
ATTORNEYS AT LAW
OFFICE ADDRESS· 518 – 9TH AVENUE NORTH, TEXAS CITY, TX 77590-6317
MAILING ADDRESS: P. O. DRAWER 2789, TEXAS CITY, TEXAS 77590-2789
409/948-3401
FAX 409/945-9814

Brent Richbook, Partner

Mark E Ciavaglia, Managing Partner
Mark.Ciavaglia@publicans.com

RECEIVED
AUG 09 2012
GALVESTON COUNTY JUDGE

August 7, 2012

Ms Renelle Lopez
Commissioner's Court
Galveston County Courthouse
722 Moody
Galveston, TX 77550

RE **Cause #09TX0125**
CAD #5782-0206-0005-000
Has Not Been Approved By Commissioner's Court
Grantee: Scanlon 1998 Family Trust

Dear Ms Lopez,

We have received an offer on the above Tax Foreclosed Property in which the County of Galveston is the Trustee This offer will need to be approved by other taxing entities as well (City of League City and Dickinson ISD) Please schedule this for review by the Commissioner's Court Attached for the Commissioner's reference is a copy of the Bid Analysis, Bid Form, Galveston CAD Property Information and CAD Tax Map and the Proceeds Distribution Form

If this sale is approved, please have Judge Mark Henry sign the enclosed Trustee's Deed Please return the signed Trustee's Deed back to us in the enclosed envelope We will have it approved and signed by the other taxing entities

If you have any questions, please give me a call

Best regards,

Judy A. Fuller
Executive Administrative Assistant to
Mark E Ciavaglia

JF encls

TAX FORECLOSURE SALE BID ANALYSIS

Galveston County, Trustee

PROPERTY DESCRIPTION

LEGAL DESCRIPTION: Lots 5,6, 11 & 12, Blk 206, Moore's Addn, League City, Galveston County, TX

LOCATION: 2002 Hawaii Ave., League City, TX 77573

CAD ACCOUNT #: 5182-0206-0005-000

Land HS $26,000
Imp HS $ 9,900

JUDGEMENT INFORMATION

DATE SHERIFF'S SALE 09/06/11

REDEMPTION EXPIRES: EXPIRED

CAUSE # 09TX0125

STYLED: Galveston County, et al. vs. Abundio Munoz, et al.

DATE DEED RECORDED: 11/23/10

RECORDING REFERENCE: 2010058517

COSTS:

GRAND TOTAL/JUDGEMENT AMT: $ 13,095.38

TAX RESALE INFORMATION

BID AMOUNT: $10,500.00

NAME OF BIDDER: Scanlon 1998 Family Trust
P O Box 58825
Houston, TX 77258

BID FORM
FOR TAX FORECLOSED PROPERTY

I, (We) Scanlon 1998 Family Trust
hereby declare and certify that

(A) I (We) are the Bidder(s) for the following properties

CAD Property # 5182-0206-0005-000, described as follows
Lots 5, 6, 11 & 12, BLK 206 Moores Addn. League City
2002 Hawaii Ave., League City

(B) Bid Amount $ 10,500.00

Enclosed is my (our) Cashier's Check or Money Order made payable to the **County of Galveston** in the sum of $ 1100.00, which is ten percent (10%) deposit for my (our) bid or $100 00, whichever is greater Payment in full must be made within thirty (30) days of final award of bid or bidder will forfeit bid deposit

(C) I (We) agree that Galveston County reserves the right to reject any or all bids and to waive any formality in the bidding No title insurance or surveys will be provided Property is being sold "as it", "where is" and "without warranty"

(D) By my signature below, I certify that I understand the conditions and limitation of this sale I further understand that the "minimum bid" amount may not include other taxes due which were not included in the judgment and that I will be responsible for those taxes if I am the successful bidder I agree to indemnify Galveston County and its agents from any action or damages arising from the purchase of this property

(E) I/We acknowledge that neither I/We nor the entity tendering this bid owns property on which delinquent property taxes are due and owing The term 'delinquent property taxes' is defined as ad valorem taxes on either real property or business personal property for the tax year 2006 and prior tax years I/We acknowledge that my bid may be rejected if I/We own property on which delinquent taxes are due and owing

Scanlon 1998 Family Trust	Trustee
* Bidder(s) printed name	Bidder(s) Signature
P.O. Box 58825	281-460-7663 cell
* Address	Phone Number
Houston, Texas 77258	7/18/12
* City, State Zip Code	Date

***as it will appear on the Deed**

IN Addition, Existing structure is Dilapidated

THIS DOCUMENT CONTAINS A TRUE WATERMARK - HOLD TO LIGHT TO VIEW / ESTE DOCUMENTO CONTIENE UNA MARCA DE AGUA VERDADERA - TIENEN A LA LUZ PARA VER

BBVA Compass

CASHIER'S CHECK

500708114

CHEQUE DE CAJA

61-118/620

Date/Fecha 07/18/2012 358

PAY TO THE ORDER OF COUNTY OF GALVESTON

Paguese por este cheque a lo orden de

****** $1,100 00 ******

*** ONE THOUSAND ONE HUNDRED DOLLARS AND 00 CENTS ***

Remitter/Remitente: SCANLON 1998 FAMILY TRUST
Description/Descripción 2002 HAWAII AVE

Catherine Soehl

AUTHORIZED SIGNATURE / FIRMA AUTORIZADA

⑈500708114⑈ ⑆062001186⑆ 151 5611 2⑈

Galveston Central Appraisal District
9850 Emmett F Lowry Expressway Ste A, Texas City, TX 77591, (866) 2
Data on this Web site represents PRELIMINARY 2012 Information-CLICK HISTORY

Home
General Information
News
FAQ
Searches
- Property ID Search
- Account Search
- Owner Search
- Address Search

Property Data
- Detail Sheet
- History
- Datasheet

Other
- Taxing Units
- Neighborhoods
- Abstracts
- Subdivisions
- ARB Rules
- ONLINE Protest Info
- New Homestead Info
- Tax Code
- Calendar
- Property Codes
- County Tax Rates
- PROTEST VIDEO
- Legislative Updates
- Forms
- GIS Map Viewer
- County Tax Office
- GIS Shape Files
- PDF Map Index
- NBHD Map Index
- 3D Aerial Photos
- Links

Property Detail Sheet (R166123)

History Plat Map GIS Map Datasheet
Protest

Owner Information

Owner ID	O407483
Owner Name	COUNTY-GALVESTON
Owner Address	722 MOODY AVE GALVESTON,TX 77550-2317
Property Address	2002 HAWAII AVE LEAGUE CITY, TX 77573

Parcel Information

Legal Description	ABST 19 PERRY & AUSTIN LOTS 5 - 6 & 11 & 12 BLK 206 MOORES ADDN
Neighborhood	5182(5182 - Moores Addn)
Acreage	0 596
Cross Reference	5182-0206-0005-000
Undivided Interest	100%
Exemption Codes	EX (Exempt Property)
Entity Codes	S11 (Dickinson Isd) GGA (Galveston County) J05 (Mainland College) RFL (Co Road & Flood) C40 (League City)
Deed Type	Sheriff's Deed
Deed Book	
Deed Page	2010058517
Map Page	143-C

Values Breakdown	2012 Preliminary Value
Land HS	$26,000 +
Land NHS	$0 +
Improvement HS	$9,900 +
Improvement NHS	$0 +
Ag Market	$0
Ag Use	$0 +
Timber Market	$0
Timber Use	$0 +
Assessed	$35,900 =

Improvements

ID	Type	SPTB	Segs	Value
Imp1	R (Residential)	A9 (Exempt Residential Single F	2	$ 9,900

Land

Current Owner	Legal Description	Exemptions	Market
COUNTY-GALVESTON (O407483) 722 MOODY AVE GALVESTON TX 77550-2317	ABST 19 PERRY & AUSTIN LOTS 5 - 6 & 11 & 12 BLK 206 MOORES ADDN	EX	35,900
		Entities	**Assessed**
		S11 GGA, J05 RFL, C40	35,900

Situs Address

2002 HAWAII AVE
LEAGUE CITY, TX 77573

Sales

Date	Volume	Page	Seller Name
11/18/2010	2010058517		MUNOZ, ABUNDIO & MARIA B YOUNG, RUTH TR

History Information

	2011	2010	2009	2008
Imp HS	$9,900	$9,900	$9,900	$9,900
Imp NHS	$0	$0	-	-
Land HS	$26,000	$26,000	$26,000	$26,000
Land NHS	$0	$0	-	-
Ag Mkt	$0	$0	-	-
Ag Use	$0	$0	-	-
Tim Mkt	$0	$0	-	-
Tim Use	$0	$0	-	-
HS Cap	-	-	-	-
Assessed	$35 900	$35,900	$35,900	$35,900

Building Attributes

Construction	Foundation	Exterior	Interior	Roof	Flooring
SFC	CB	WF	SR	CS	VI
Heat/AC	**Baths**	**Fireplace**	**Year Built**	**Rooms**	**Bedrooms**
ST			1956		

Land Segments

SPTB	Description	Area	Market	Ag Value
A9	Residential Lot	26000F	26,000	0

Improvements

Type	Description	Area	Year Built	Eff Year	Value
R	Residential				$9 900
MA	Main Area	612	1956	1958	$7 560
MAA	Main Area Addition	252	1956	1958	$2,340

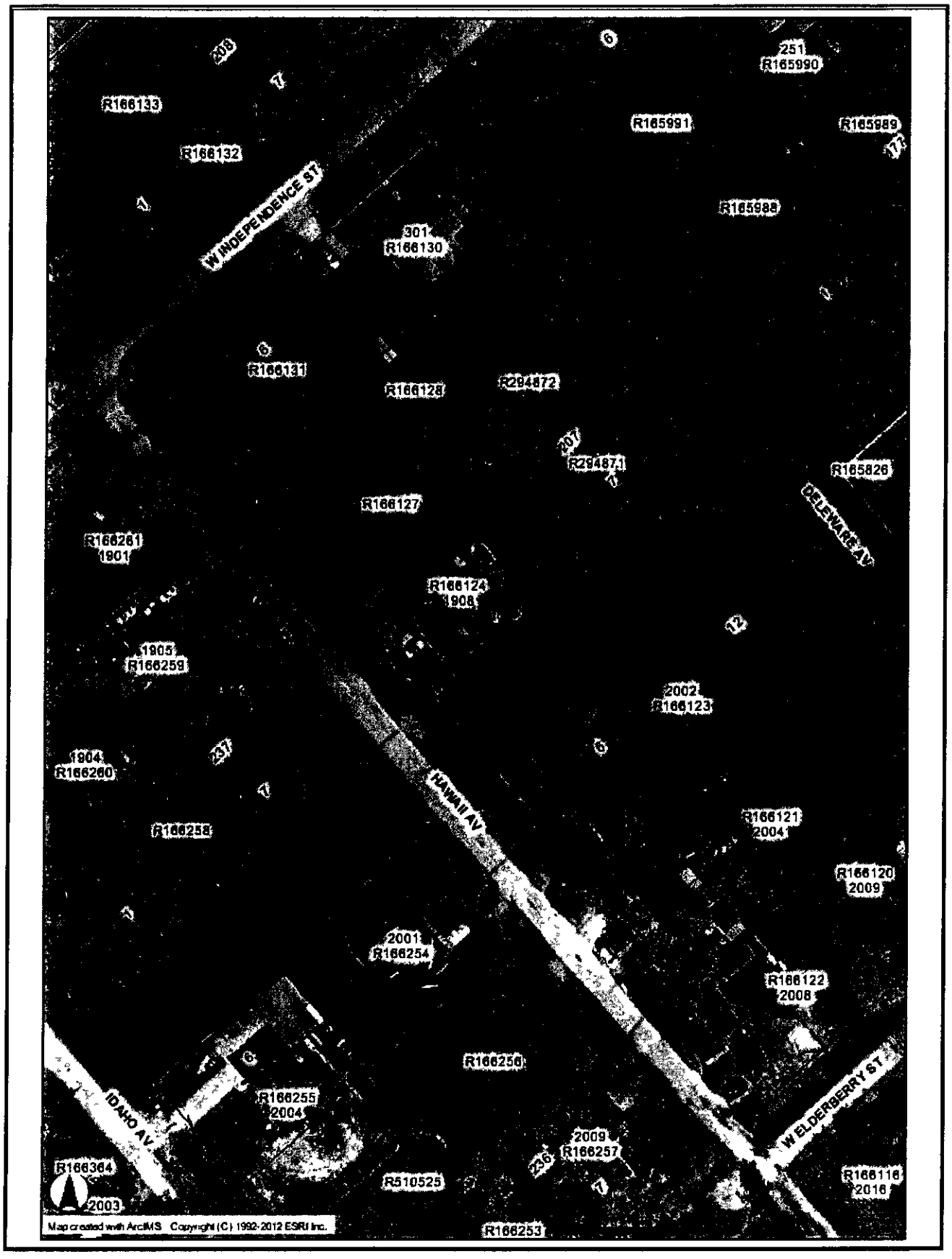

5182-0206-0005-000

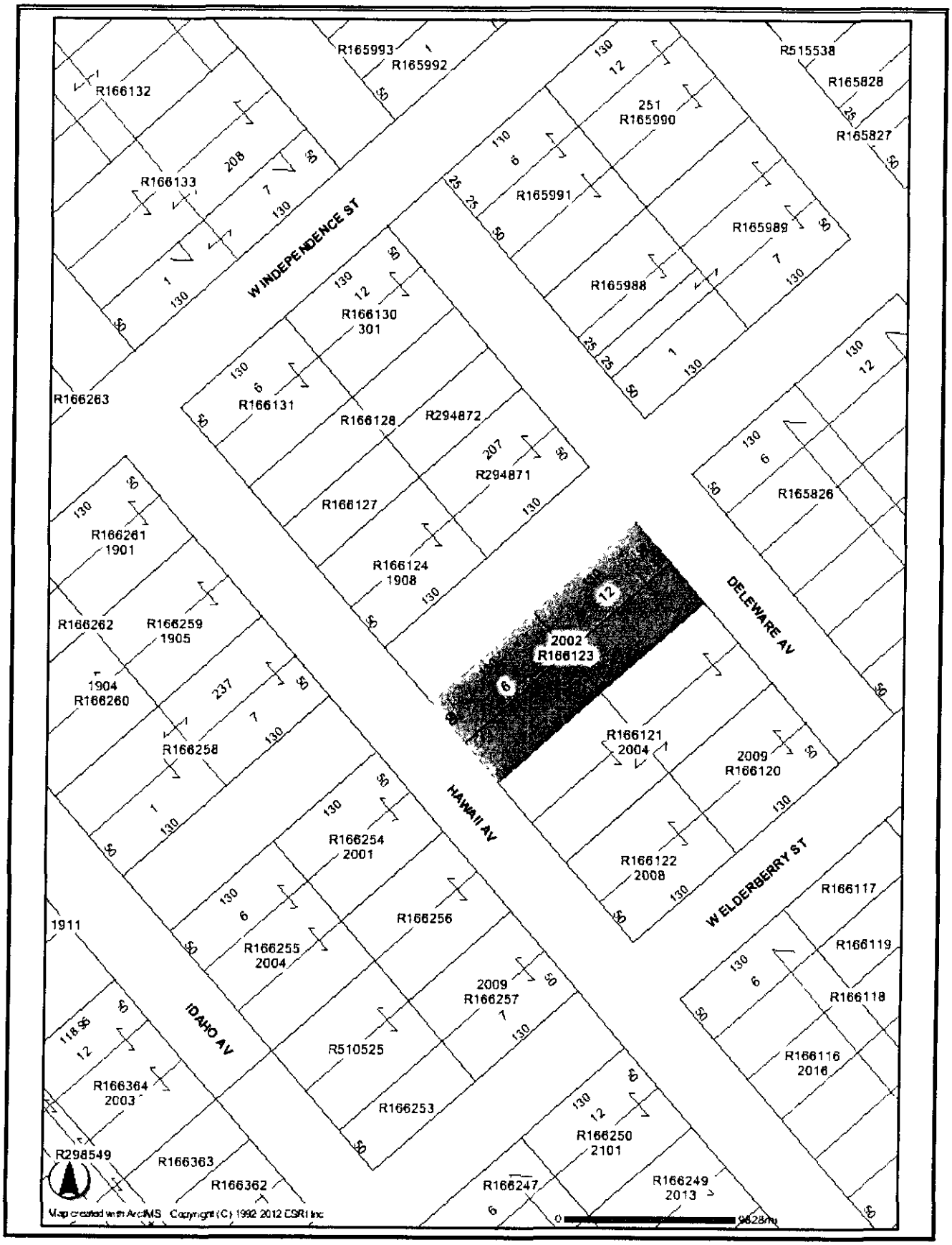

5182-0206-0005-000

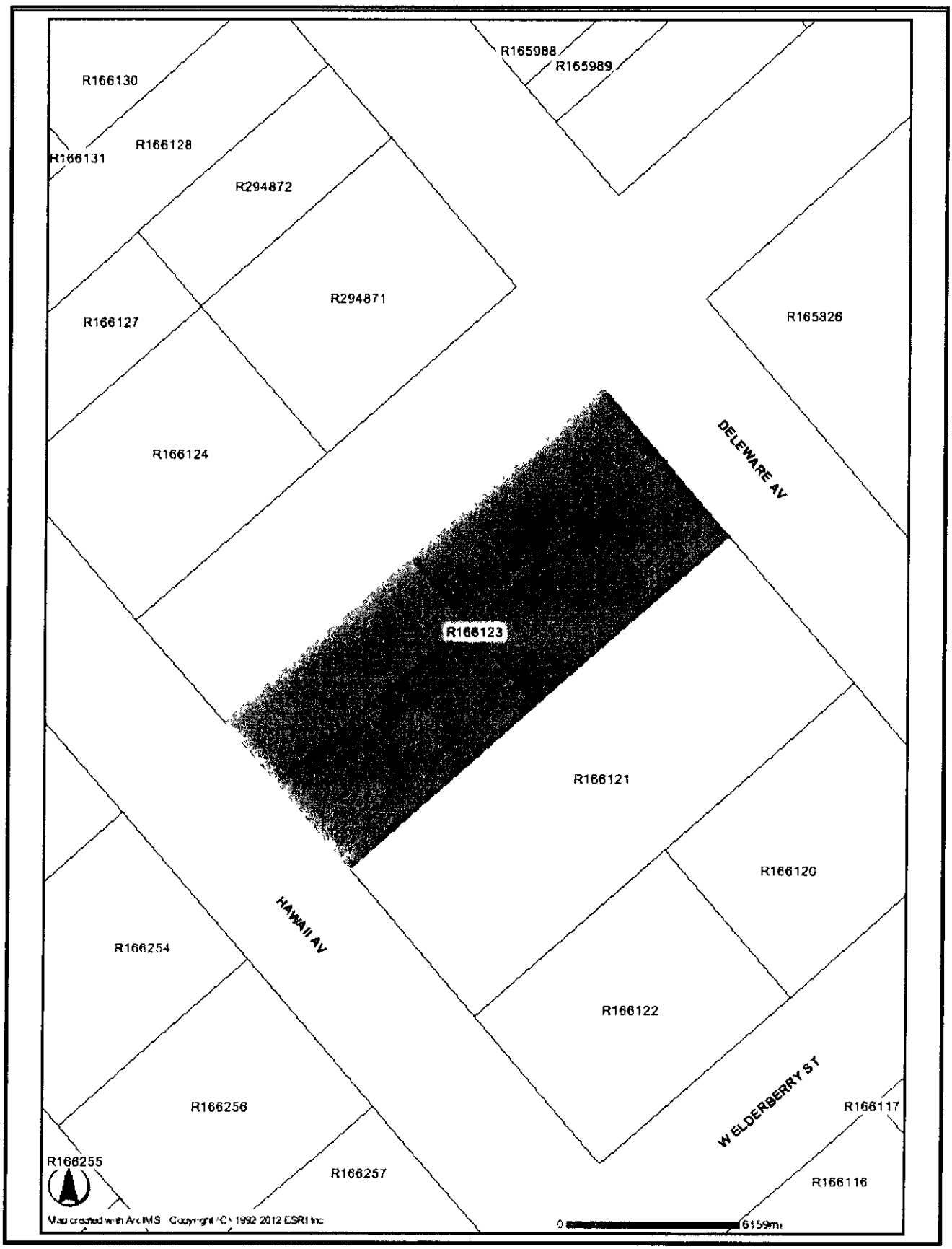

5182-0206-0005-000

RESALE OF PROPERTY
PROCEEDS DISTRIBUTION FORM

Cause Number **09TX0125** on the docket of the **56th** District Court
COUNTY OF GALVESTON, ET AL. VS. ABUNDIO MUNOZ, ET AL.

Property Account Number **5182-0206-0005-000**

Legal Description **LOTS FIVE (5), SIX (6), ELEVEN (11) & TWELVE (12), BLOCK TWO HUNDRED SIX (206), MOORE'S ADDITION, LEAGUE CITY, GALVESTON COUNTY, TEXAS, SAID PROPERTY BEING MORE PARTICULARLY DESCRIBED IN THE INSTRUMENT RECORDED AT FILM CODE NUMBER 006-04-1633 IN THE OFFICIAL DEED RECORDS OF GALVESTON COUNTY, TEXAS.**

Property Sold at Sheriff's Sale Conducted on NOVEMBER 2, 2010 for **$13,095.38**

Property Re-Sold to **SCANLON 1998 FAMILY TRUST, P.O. BOX 58825, HOUSTON, TX 77258** for **$10,500.00**

Proceeds Distribution

Payment of Costs Pursuant to Texas Property Tax Code §34 02	Original Amt Due At Sale	Actual Disburseme
(1) Advertising		
to "Galveston County Sheriff's Dept " (publication costs)	$ 657 80	$ 657 80
(2) Reimbursement - Costs, Fees		
to "Galveston County Clerk" (recording fee #2010058517)	$ -	$ 20 00
(3) Attorney Ad Litem Fees		
to "Billy Williams" 1026 Tremont, Galveston, TX 77550	$ 500 00	$ 500 00
(4) Court Costs		
to "Galveston County District Clerk"	$ 530 00	$ 530 00
(5) Title Search Fees		
to "Lyn Wingert & Associates"	$ 250 00	$ 250 00
	$ 1,937 80	$ 1,957 80

Taxing Entity Distribution	Proportionate Share	Taxes Due at Original Sale	Resale Share/(Los
to "COUNTY OF GALVESTON"	0 1989972993	$ 2,220 33	$ 1,699 87
to "DICKINSON INDEPENDENT SCHOOL DISTRICT"	0 5206913958	$ 5,809 66	$ 4,447 85
to "CITY OF LEAGUE CITY"	0 2043615768	$ 2,280 18	$ 1,745 70
to "COLLEGE OF THE MAINLAND"	0 0759497281	$ 847 42	$ 648 78
	Subtotal	$ 11,157 59	$ 8,542 20
	Grand Total	$ 13,095 39	$ 10,500 00

NOTICE OF CONFIDENTIALITY RIGHTS: IF YOU ARE A NATURAL PERSON, YOU MAY REMOVE OR STRIKE ANY OR ALL OF THE FOLLOWING INFORMATION FROM ANY INSTRUMENT THAT TRANSFERS AN INTEREST IN REAL PROPERTY BEFORE IT IS FILED FOR RECORD IN THE PUBLIC RECORDS YOUR SOCIAL SECURITY NUMBER OR YOUR DRIVER'S LICENSE NUMBER

TRUSTEE'S DEED

THE STATE OF TEXAS §
§ KNOW ALL MEN BY THESE PRESENTS
COUNTY OF GALVESTON §

WHEREAS, by Order of Sale, issued by the Galveston County District Court, **56th** Judicial District in Cause Numbered **09TX0125** styled "**COUNTY OF GALVESTON, ET AL. VS. ABUNDIO MUNOZ, ET AL.**" the Sheriff of Galveston County, on SEPTEMBER 21, 2010, seized and levied upon the right, title and interest the defendants had in the premises hereinafter described, and

WHEREAS, the Sheriff on **NOVEMBER 2, 2010**, sold and conveyed the premises to **COUNTY OF GALVESTON**, as Trustee for itself and for **CITY OF LEAGUE CITY, COLLEGE OF THE MAINLAND** and **DICKINSON INDEPENDENT SCHOOL DISTRICT** for the sum of **THIRTEEN THOUSAND NINETY-FIVE AND 38/100 DOLLARS ($13,095.38)**, it being the highest bidder therefore, and

WHEREAS, the GRANTEE named herein desires to purchase this property for the sum of **TEN THOUSAND FIVE HUNDRED AND NO/100 DOLLARS ($10,500.00)**, and

WHEREAS, this sale is authorized pursuant to V T C A , Tax Code §34 05(b)

WHEREAS this sale is authorized pursuant to an Interlocal Agreement between **COUNTY OF GALVESTON, CITY OF LEAGUE CITY, COLLEGE OF THE MAINLAND and DICKINSON INDEPENDENT SCHOOL DISTRICT** as permitted under Texas Government Code §791 011, and

WHEREAS the Interlocal Agreement between **COUNTY OF GALVESTON, CITY OF LEAGUE CITY, COLLEGE OF THE MAINLAND and DICKINSON INDEPENDENT SCHOOL DISTRICT** provides that the County Judge of Galveston County will execute Trustee's Deeds on behalf of all taxing entities made a party to the Interlocal Agreement pursuant to offers approved by the Resale Committee under the Interlocal Agreement

NOW, THEREFORE, in consideration of the sum of **TEN THOUSAND FIVE HUNDRED AND NO/100 DOLLARS ($10,500.00)** paid by the GRANTEE named below, the receipt and sufficiency of which is acknowledged, COUNTY OF GALVESTON, CITY OF LEAGUE CITY, and COLLEGE OF THE MAINLAND, ("GRANTOR"), have GRANTED, SOLD and CONVEYED, and by these presents does GRANT, SELL and CONVEY to **SCANLON 1998 FAMILY TRUST**, of **P.O. BOX 58825, HOUSTON, TX 77258** ("GRANTEE"), the following described real property, to wit

LOTS FIVE (5), SIX (6), ELEVEN (11) & TWELVE (12), BLOCK TWO HUNDRED SIX (206), MOORE'S ADDITION, LEAGUE CITY, GALVESTON COUNTY, TEXAS, SAID PROPERTY BEING MORE PARTICULARLY DESCRIBED IN THE INSTRUMENT RECORDED AT FILM CODE NUMBER 006-04-1633 IN THE OFFICIAL DEED RECORDS OF GALVESTON COUNTY, TEXAS

GRANTOR excludes and excepts from this conveyance any warranties, express or implied, on the property, including, without limitation, any warranties arising by common law or Section 5 023 of the Texas Property Code

GRANTOR conveys the property

a) "as is", "with all faults" and without any warranty as to condition or environmental hazard,

b) subject to all restrictions, easements, rights-of-way leases, oil, gas and mineral leases, royalties, mineral conveyances, and mineral reservations of record, if any, in the office of the County Clerk of said County,

c) subject to any right of redemption, and

d) subject to rights of parties in possession

GRANTOR disclaims any warranty, guaranty or representation, oral or written, on

a) the nature and condition of the property or other items conveyed hereunder, including, without limitation, the water, soil and geology,

b) the suitability of the property conveyed hereunder for any and all activities and uses which GRANTEE may elect to conduct thereon,

c) the existence of any environmental hazards or conditions thereon (including but not limited to the presence of asbestos or other hazardous materials),

d) compliance with applicable environmental laws, rules or regulations, and

e) the compliance of the property with any laws, ordinances, or regulations of any governmental entity or body

By acceptance of this deed, GRANTEE acknowledges and agrees.

a) that GRANTOR acquired the property through foreclosure of a tax lien as Trustee and as such has little, if any, knowledge of the physical or economic characteristics of the property,

b) GRANTEE has inspected the property and are relying solely on their own investigation of the same and not on any information provided or to be provided by on behalf of GRANTOR,

c) that any information provided with respect to the property was obtained from a variety of sources,

d) GRANTOR (1) has not made any independent investigation or verification of such information, and (2) does not make any representations as to the accuracy or completeness of such information, and

e) that if there are any improvements on the property, GRANTOR shall not be responsible for or liable to GRANTEE for any construction defects, errors, omissions, of any other conditions affecting the property

GRANTEE or anyone claiming by, through or under GRANTEE, hereby fully releases GRANTOR, its employees, officers, directors, representatives, attorneys and agents from any and all claims that it may now have or hereafter acquire against GRANTOR, its respective employees, officers, directors, representatives, attorneys and agents for any cost, loss, liability, damage, expense, demand, action or cause of action arising from or related to the

conveyance of the premises herein as well as any construction defects, errors, omissions, or other conditions affecting the property and other items conveyed hereunder GRANTEE further acknowledges and agrees that this release shall be given full force and effect according to each of its express terms and provisions, including, but not limited to, those relating to unknown and suspected claims, damages and causes of action. This covenant releasing GRANTOR shall be a covenant running with the property and shall be binding upon GRANTEE, their heirs, successors, beneficiaries and assigns GRANTOR hereby assigns without recourse or representation of any nature to GRANTEE, effective upon the execution and delivery hereof, any and all claims that GRANTOR may have for any such errors, omissions or defects in the property an other items conveyed hereunder As a material covenant and condition of this conveyance, GRANTEE agrees that in the event of any such construction defects, errors, omissions or on account of any other conditions affecting the property, GRANTEE shall look solely to GRANTOR's predecessors or to such contractors and consultants as may have contracted for work in connection with the property and other items conveyed hereunder for any redress or relief Upon the assignment by GRANTOR of its claims, GRANTEE releases GRANTOR of all right, express or implied, GRANTEE may have against GRANTOR arising our of or resulting from any errors, omissions or defects in the property and other items conveyed hereunder GRANTEE further understands that some of GRANTOR's predecessors in interest may be or become insolvent, bankrupt, judgment-proof or otherwise incapable of responding in damages, and GRANTEE may have no remedy against such predecessors, contractors or consultants

GRANTEE hereby further agrees on behalf of himself and his heirs, successors, beneficiaries and assigns to indemnify, protect, defend, save and hold harmless GRANTOR and GRANTOR's elected and appointed officials, employees, officers, directors, representatives, attorneys and agents from and against any and all debts, duties, obligations, liabilities, suits, claims, demands, cause of action, damages, losses, costs and expenses (including, without limitation, attorneys' fees and expenses and court costs) in any way relating to, connected with or arising out of the property and other items conveyed hereunder or the ownership, leasing, use, operation, maintenance and management thereof from and after the date hereof, including, without limitation, the cost of any removal of hazardous substances or contaminants from the property and other items conveyed hereunder

TO HAVE AND TO HOLD the above described premises together with all and singular the rights and appurtenances thereto in any wise belonging unto GRANTEE, their heirs, and assigns, forever

Taxes for the current year are to be paid by GRANTEE

EXECUTED this the 21st day of August, 2012

COUNTY OF GALVESTON

By: _____
County Judge of Galveston County, Texas

STATE OF TEXAS §
§
COUNTY OF GALVESTON §

BEFORE ME, the undersigned authority, on this day personally appeared Mark Henry as County Judge of Galveston County, Texas, known to me to be the person whose name is subscribed to the foregoing instrument, and acknowledged to me that he executed the same for the purposes and consideration therein expressed.

GIVEN under my hand and seal of office this the 21st day of August, 2012.

ROXANA GAIL LEWIS
Notary Public, State of Texas
My Commission Expires
February 11, 2015

_____
NOTARY PUBLIC, in and for the State of Texas

Roxana Lewis
Printed or Typed Name of Notary

EXECUTED this the _____ day of _____, 2012

DICKINSON INDEPENDENT SCHOOL DISTRICT

By:_____

_____
(Print Name and Title)

STATE OF TEXAS §
§
COUNTY OF GALVESTON §

BEFORE ME, the undersigned authority, on this day personally appeared _____, as _____ of Dickinson Independent School District, known to me to be the person whose name is subscribed to the foregoing instrument, and acknowledged to me that he executed the same for the purposes and consideration therein expressed.

GIVEN under my hand and seal of office this the _____ day of _____, 2012

_____
NOTARY PUBLIC, in and for the State of Texas

_____
Printed or Typed Name of Notary

EXECUTED this the _____ day of _____, 2012

CITY OF LEAGUE CITY

By: _____

_____
(Print Name and Title)

STATE OF TEXAS §
§
COUNTY OF GALVESTON §

BEFORE ME, the undersigned authority, on this day personally appeared _____, as _____ of CITY OF LEAGUE CITY, known to me to be the person whose name is subscribed to the foregoing instrument, and acknowledged to me that he executed the same for the purposes and consideration therein expressed

GIVEN under my hand and seal of office this the _____ day of _____, 2012

_____
NOTARY PUBLIC, in and for the State of Texas

_____
Printed or Typed Name of Notary

After recording return to:
Linebarger Goggan Blair & Sampson, LLP
P O Box 2789
Texas City, TX 77592-2789

AGENDA ITEM #21c

LINEBARGER GOGGAN BLAIR & SAMPSON, LLP
ATTORNEYS AT LAW
OFFICE ADDRESS. 518 – 9TH AVENUE NORTH, TEXAS CITY, TX 77590-6317
MAILING ADDRESS· P O DRAWER 2789, TEXAS CITY, TEXAS 77590-2789
409/948-3401
FAX 409/945-9814

Brent Richbook, Partner

Mark E Ciavaglia, Managing Partner
Mark Ciavaglia@publicans com

August 9, 2012

RECEIVED
AUG 10 2012
GALVESTON COUNTY JUDGE

Ms Renelle Lopez
Commissioner's Court
Galveston County Courthouse
722 Moody
Galveston, TX 77550

RE **Bids on Galveston County Tax Foreclosed Resale Property**
Have Not Been Approved By Commissioner's Court
Grantee: David Jetelina

Dear Ms Lopez,

Perdue Brandon Fielder Collins & Mott, LP has received offer on the tax foreclosed properties listed below on which Dickinson ISD is the Trustee These offers were reviewed by Dickinson ISD's Board of Trustees and they have approved these sales Please schedule these for review by the Commissioner's Court Attached for the Commissioner's reference are copies of the Resale Bid Analysis, Resale Offer Bid Form, the prepared Resale Deed and the Bid Sheet from the tax sale on the following properties

Cause #	CAD #	Bid Amount
11TX0004	5721-0008-0010-000	$ 8,100 00
08TX0460	2655-0113-0017-000	$ 5,050 00

If these sales are approved, please have Judge Mark Henry sign the enclosed Resale Deeds and return them to Perdue Brandon Fielder Collins & Mott, LLP at the address shown on Page 7 of the Resale Deed

If you have any questions, please give me a call

Best regards,

Judy A Fuller
Executive Administrative Assistant to
Mark E Ciavaglia

JF encls

RECEIVED
AUG 10 2012
GALVESTON COUNTY JUDGE

PerdueBrandonFielderCollins&Mott LLP
ATTORNEYS AT LAW

DICKINSON INDEPENDENT SCHOOL DISTRICT
OFFICIAL BID FORM

Please enter the amount you wish to bid. The Dickinson Independent School District Reserves the right to accept or reject any or all bids. No title insurance or survey will be provided Property is being sold "as is" "where is" and "without warranty " Dickinson Independent School District does not guarantee that a title company will issue title insurance on any tax resale properties.

ACCOUNT NUMBER/CAUSE NUMBER	TOTAL AMOUNT OF BID
5721-0008-0010-000 / R185750	$8,100.00
Cause # 11TX0004	

By my signature below, I certify that I understand the conditions and limitations of this sale, as well as the restrictions on the use of the property as set forth in the Texas Property Tax Code I further understand that the "minimum bid" amount on the Dickinson Independent School District resale list may not include other taxes due which are not included in the judgment and that I will be responsible for those taxes if I am the successful bidder. I agree to indemnify the Dickinson Independent School District and its agent from any action or damages arising from the purchase of this property and agree to submit any dispute to the American Arbitration Association for resolution

David Jetelina
Bidder's Name (Please Print or Type

Bidder's Signature

18118 Lakeside Lane Nassau Bay, TX 77058
Bidder's Address (City, State, Zip Code)

713-825-2372
Bidder's Telephone

April-30-2012
Date

dj@flagshiptec.com
Bidder's E-mail address

Additional Information may be attached to this to explain your bid Payment in full must be made within thirty (30) days of final award of bid, or bidder will forfeit bid

ABST 89 S HINTON LOT 10 BLK 8 PERKINS BEACH 2ND

BID ANALYSIS

Cause # 11TX0004
Bid Amount $8,100 00
Bidders Name David Jetelina
Strike Off Date 02-29-2012

Acct # 5721-0008-0010-000
Property Value $10,000 00
Minimum Bid at first sale $10,000 00
Redemption Expires 08-29-2012

JUDGMENT INFORMATION

Tax Entity	Tax Years	Amount Due
Dickinson ISD	1991-2010	$5,062 71
Galveston County CED	1991-1992	$272 76
Bacliff MUD	1991-2010	$781 87
Galveston County	1991-2010	$2,461 40

Total: $8,578.74

COSTS

Publication Fees (Payable to Galveston County Sheriff's Department)	$675 00
Court Costs (Payable to Galveston County District Clerk)	$625 00
Research Fee (Payable to Perdue, Brandon, et al)	$200 00
Filing Fees- Deed Fee (Payable to Perdue, Brandon, et al)	$20 00
Filing Fees- Resale Deed Fee (Payable to Perdue, Brandon, et al)	$35 00

Total: $1,535.00

POST JUDGMENT TAXES

Entity	Tax Year	Amount due:
Dickinson ISD, Bacliff MUD and Galveston County	2011	$291 84

Total: $291.84

PROPOSED DISTRIBUTION

Bid Amount $8,100 00
Net to Distribute $6,565 00

Costs $1,535 00
Post Judgment $291 84*

Disburse checks as follows:

Dickinson ISD (inc CED)	62 20%	$4,083 04	Pro-rated amount for judgment years 1991-2010
Galveston County	28 69%	$1,883 62	Pro-rated amount for judgment years 1991-2010
Bacliff MUD	9 11%	$598 34	Pro-rated amount for judgment years 1991-2010
PBFCM		$1,535 00	Costs due under law suit/ tax sale/ resale
Total to be disbursed		**$8,100.00**	

**Purchaser will be billed for post judgment taxes once resale deed has been recorded*

Sale Date· 12/6/2011 Cause Number. 11TX0004 File # 100494
Judgment Date: 7/25/2011

DICKINSON INDEPENDENT SCHOOL DISTRICT
VS.
FOREMAN, WILLIAM PINCKNEY ROGERS, ET AL

Tract:1 GEO: 572100080010000
LOT NO. TEN (10) IN BLOCK NO. EIGHT (8) IN SECOND SECTION OF PERKINS BEACH SUBDIVISION OF A PORTION OF THE SAMUEL HINTON SURVEY IN GALVESTON, COUNTY, TEXAS, ACCORDING TO PLAT ADOPTED AND FILLED BY G. C. PERKINS, RECORDED IN VOULME 254, PAGE 124 OF THE MAP RECORDS, TO WHICH REFERENCE IS HERE MADE FOR ALL AND MORE COMPLETE DESCRIPTION. (ACCOUNT NUMBER 5721-0008-0010-000)

Description	Item Amount	Due At Sale
Taxes		
DICKINSON INDEPENDENT SCHOOL DISTRICT· 1991-2010	$5,062 71	
GALVESTON COUNTY EDUCATION DISTRICT. 1991-1992	$272.76	
BACLIFF M U D 1991- 2010	$781 87	
GALVESTON COUNTY 1991-2010	$2,461 40	
Total Taxes		**$8,578.74**
Research Fees (Perdue Brandon Fielder Collins & Mott, L.L.P)	$200 00	**$200.00**
Court Costs (Galveston County District Clerk)	$625.00	**$625.00**
Sheriffs Fess/Commission-Publication Fees (Galveston County Sheriff's Department)	$675 00	**$675.00**
Total Due At Sale		**$10,078.74**
Appraised Value Of Property		**$10,000.00**
Minimum Bid		**$10,000.00**

SUBJECT TO THE 2011 TAX YEARS

Sold To _____
(Name)

_____
(Address)

_____
(City)

Amount Received: $_____

Struck Off To: DISD

_____
(Phone)

Notice of confidentiality rights: If you are a natural person, you may remove or strike any or all of the following information from this instrument before it is filed for record in the public records: your social security number or your driver's license number.
(Language pursuant to Section 11.008 of the Texas Property Code)

THE STATE OF TEXAS	§	
	§	RESALE DEED
COUNTY OF GALVESTON	§	

KNOW ALL MEN BY THESE PRESENTS that the DICKINSON INDEPENDENT SCHOOL DISTRICT for itself and the use and benefit of the GALVESTON COUNTY EDUCATION DISTRICT, BACLIFF MUNICIPAL UTILITY DISTRICT, COLLEGE OF THE MAINLAND and GALVESTON COUNTY, acting by and through its duly elected official ("GRANTOR") as authorized by Section 34 05, Texas Property Tax Code, for and in consideration of the sum of EIGHT THOUSAND ONE HUNDRED DOLLARS AND 00/100 ($8,100 00) AND OTHER GOOD AND VALUABLE CONSIDERATION, in hand paid by DAVID JETELINA ("GRANTEE") the receipt of which is hereby acknowledged and confessed, has granted and conveyed and by these presents do grant and convey unto said grantee all right, title and interest of the DICKINSON INDEPENDENT SCHOOL DISTRICT for itself and the use and benefit of the GALVESTON COUNTY EDUCATION DISTRICT, BACLIFF MUNICIPAL UTILITY DISTRICT, COLLEGE OF THE MAINLAND and GALVESTON COUNTY, in the property herein conveyed, acquired by tax foreclosure sale heretofore held, in Cause No 11TX0004, styled Dickinson Independent School District, et al vs William Pinckney Rogers Foreman, et al said property being described as

LOT NO TEN (10) IN BLOCK NO EIGHT (8) IN SECOND SECTION OF PERKINS BEACH SUBDIVISION OF A PORTION OF THE SAMUEL HINTON SURVEY IN GALVESTON, COUNTY, TEXAS, ACCORDING TO PLAT ADOPTED AND FILLED BY G C PERKINS, RECORDED IN VOULME 254, PAGE 124 OF THE MAP RECORDS, TO WHICH REFERENCE IS HERE MADE FOR ALL AND MORE COMPLETE DESCRIPTION (ACCOUNT NUMBER 5721-0008-0010-000)

GRANTOR excludes and excepts from this conveyance any warranties, express or implied, on the property, including, without limitation, any warranties arising by common law or Section 5 023 of the Property Code

GRANTOR conveys the property

(a) "as is", "with all faults" and without any warranty as to condition or environmental hazard,

(b) subject to all restrictions, easements, rights-of-way leases, oil, gas and mineral leases, royalties, mineral conveyances, and mineral reservations of record, if any, in the office of the County Clerk of said County,

(c) subject to any right of redemption, and

(d) subject to rights of parties in possession

GRANTOR disclaims any warranty, guaranty or representation, oral or written, on

(a) the nature and condition of the property or other items conveyed hereunder, without limitation, the water, soil and geology,

(b). the suitability of the property conveyed hereunder for any and all activities and uses which GRANTEE may elect to conduct thereon,

(c) the existence of any environmental hazards or conditions thereon, (including but not limited to the presence of asbestos or other hazardous materials),

(d) compliance with applicable environmental laws, rules or regulations; and

(e) the compliance of the property with any laws, ordinances, or regulations of any governmental entity or body

By acceptance of this deed, GRANTEE acknowledges and agrees

(a) that GRANTOR acquired the property through foreclosure of a tax lien as Trustee and as such has little, if any, knowledge of the physical or economic characteristics of the property,

(b) GRANTEE has inspected the property and is relying solely on **his** own investigation of the same and not on any information provided or to be provided by on behalf of GRANTOR,

(c) that any information provided with respect to the property was obtained from a variety of sources, and

(d) GRANTOR (1) has not made any independent investigation or verification of such information, and (2) does not make any representations as to the accuracy or completeness of such information.

(e) that if there are any improvements on the property, GRANTOR shall not be responsible for or liable to GRANTEE for any construction defects, errors omissions, or any other conditions affecting the property

GRANTEE or anyone claiming by, through or under GRANTEE, hereby fully releases GRANTOR, its employees, officers, directors, representatives, attorneys and agents from any and all claims that it may now have or hereafter acquire against GRANTOR, its respective employees, officers, directors, representatives, attorneys and agents for any cost, loss, liability, damage, expense, demand, action or cause of action arising from or related to the conveyance of the premises herein as well as any construction defects, errors, omissions, or other conditions affecting the property and other items conveyed hereunder GRANTEE further acknowledges and agrees that this release shall be given full

force and effect according to each of its express terms and provisions, including, but not limited to, those relating to unknown and suspected claims, damages and causes of action. This covenant releasing GRANTOR shall be a covenant running with the property and shall be binding upon GRANTEE, **his** heirs, successors, beneficiaries and assigns GRANTOR hereby assigns without recourse or representation of any nature to GRANTEE, effective upon the execution and delivery hereof, any and all claims that GRANTOR may have for any such errors, omissions or defects in the property and other items conveyed hereunder As a material covenant and condition of this conveyance, GRANTEE agrees that in the event of any such construction defects, errors, omissions or on account of any other conditions affecting the property, GRANTEE shall look solely to GRANTOR'S predecessors or to such contractors and consultants as may have contracted for work in connection with the property and other items conveyed hereunder for any redress or relief. Upon the assignment by GRANTOR of its claims, GRANTEE releases GRANTOR of all right, express or implied, GRANTEE may have against GRANTOR arising out of or resulting from any errors, omissions or defects in the property and other items conveyed hereunder GRANTEE further understands that some of GRANTOR'S predecessors in interest may be or become insolvent, bankrupt, judgment-proof or otherwise incapable of responding in damages and GRANTEE may have no remedy against such predecessors, contractors or consultants.

GRANTEE hereby further agrees on behalf of **himself** and **his** heirs, successors, beneficiaries and assigns to indemnify, protect, defend, save and hold harmless GRANTOR and GRANTOR'S elected and appointed officials, employees, officers, directors, representatives, attorney and agents from and against any and all debts, duties, obligation, liabilities, suits, claims, demands, cause of action, damages, losses, costs and expenses (including, without limitation, attorneys' fees and expenses and court costs) in any way relating to, connected with or arising out of the property and other items conveyed hereunder or the ownership, leasing, use, operation, maintenance and management thereof from and after the date hereof, including, without limitation, the cost of any removal of hazardous substances or contaminants from the property and other items conveyed hereunder.

TO HAVE AND TO HOLD said premises, together with all and singular the rights, privileges and appurtenances thereto in any manner belonging unto the said DAVID JETELINA, **his** successors, beneficiaries, heirs and assigns forever, so that neither the DICKINSON INDEPENDENT SCHOOL DISTRICT for itself and the use and benefit of the GALVESTON COUNTY EDUCATION DISTRICT, BACLIFF MUNICIPAL UTILITY DISTRICT, COLLEGE OF THE MAINLAND and GALVESTON COUNTY, nor any person claiming under it shall at any time hereafter have, claim or demand any right or title to the aforesaid premises or appurtenances, or any part thereof

Taxes for post judgment years and for the current year are assumed by, and are to be paid by GRANTEE

Executed this _____day of _____, 2012

IN TESTIMONY WHEREOF, the taxing authorities herein have caused these presents to be executed their _____ day of _____, 2012

COPY

DICKINSON INDEPENDENT SCHOOL DISTRICT FOR
ITSELF AND AS TRUSTEE FOR THE USE AND BENEFIT OF
THE GALVESTON COUNTY EDUCATION DISTRICT

_____
FRITZIE SAMFORD
PRESIDENT, BOARD OF TRUSTEES

THE STATE OF TEXAS §
§
COUNTY OF GALVESTON §

ACKNOWLEDGMENT

BEFORE ME, the undersigned authority, on this day personally appeared, FRITZIE SAMFORD, President, Board of Trustees, Dickinson Independent School District, known to me to be the person whose name is subscribed to the foregoing instrument, and acknowledged to me that s/he executed same for the purposes and consideration therein expressed and in the capacity therein stated.

GIVEN UNDER MY HAND AND SEAL OF OFFICE this _____day of

_____, 2012

_____
NOTARY PUBLIC, in and for the
STATE OF TEXAS
SEAL My Commission Expires· _____

GALVESTON COUNTY

MARK HENRY
COUNTY JUDGE

THE STATE OF TEXAS §
§
COUNTY OF GALVESTON §

BEFORE ME, the undersigned authority, on this day personally appeared MARK HENRY, County Judge, Galveston County, known to me to be the person whose name is subscribed to the foregoing instrument, and acknowledged to me that he executed same for the purposes and consideration therein expressed and in the capacity therein stated

GIVEN UNDER MY HAND AND SEAL OF OFFICE this 21st day of August 2012.

ROXANA GAIL LEWIS
Notary Public, State of Texas
My Commission Expires
February 14, 2015

NOTARY PUBLIC, in and for the
STATE OF TEXAS

My Commission Expires: Feb. 14, 2015

BACLIFF MUNICIPAL UTILITY DISTRICT

_____

BRAD BINGHAM
PRESIDENT, BOARD OF DIRECTORS

THE STATE OF TEXAS §
§
COUNTY OF GALVESTON §

BEFORE ME, the undersigned authority, on this day personally appeared BRAD BINGHAM, President, Board of Directors, Bacliff Municipal Utility District, known to me to be the person whose name is subscribed to the foregoing instrument, and acknowledged to me that he executed same for the purposes and consideration therein expressed and in the capacity therein stated.

GIVEN UNDER MY HAND AND SEAL OF OFFICE this _____day of

_____ 2012

_____

NOTARY PUBLIC, in and for the
STATE OF TEXAS

My Commission Expires _____

COLLEGE OF THE MAINLAND

_____
RALPH HOLM
BOARD OF TRUSTEES CHAIR

THE STATE OF TEXAS §
§
COUNTY OF GALVESTON §

BEFORE ME, the undersigned authority, on this day personally appeared RALPH HOLM, Board of Trustees Chair, College of the Mainland, known to me to be the person whose name is subscribed to the foregoing instrument, and acknowledged to me that he executed same for the purposes and consideration therein expressed and in the capacity therein stated

GIVEN UNDER MY HAND AND SEAL OF OFFICE this _____day of

_____ 2012.

_____
NOTARY PUBLIC, in and for the
STATE OF TEXAS

My Commission Expires: _____

Grantee: DAVID JETELINA
18118 LAKESIDE LANE
NASSAU BAY, TEXAS 77058

AFTER RECORDING, RETURN TO:
Perdue, Brandon, Fielder, Collins & Mott, L.L.P.
1235 North Loop West, Suite 600
Houston, Texas 77008

AGENDA ITEM #21d

LINEBARGER GOGGAN BLAIR & SAMPSON, LLP
ATTORNEYS AT LAW
OFFICE ADDRESS. 518 – 9TH AVENUE NORTH, TEXAS CITY, TX 77590-6317
MAILING ADDRESS P. O DRAWER 2789, TEXAS CITY, TEXAS 77590-2789
409/948-3401
FAX 409/945-9814

Brent Richbook, Partner

Mark E Ciavaglia, Managing Partner
Mark.Ciavaglia@publicans.com

August 9, 2012

RECEIVED
AUG 10 2012
GALVESTON COUNTY JUDGE

Ms Renelle Lopez
Commissioner's Court
Galveston County Courthouse
722 Moody
Galveston, TX 77550

RE **Bids on Galveston County Tax Foreclosed Resale Property**
Have Not Been Approved By Commissioner's Court
Grantee David Jetelina

Dear Ms Lopez,

Perdue Brandon Fielder Collins & Mott, LP has received offer on the tax foreclosed properties listed below on which Dickinson ISD is the Trustee These offers were reviewed by Dickinson ISD's Board of Trustees and they have approved these sales Please schedule these for review by the Commissioner's Court Attached for the Commissioner's reference are copies of the Resale Bid Analysis, Resale Offer Bid Form, the prepared Resale Deed and the Bid Sheet from the tax sale on the following properties

Cause #	CAD #	Bid Amount
11TX0004	5721-0008-0010-000	$ 8,100 00
08TX0460	2655-0113-0017-000	$ 5,050 00

If these sales are approved, please have Judge Mark Henry sign the enclosed Resale Deeds and return them to Perdue Brandon Fielder Collins & Mott, LLP at the address shown on Page 7 of the Resale Deed

If you have any questions, please give me a call

Best regards,

Judy A Fuller
Executive Administrative Assistant to
Mark E Ciavaglia

JF encls

DICKINSON INDEPENDENT SCHOOL DISTRICT

OFFICIAL BID FORM

Please enter the amount you wish to bid The Dickinson Independent School District Reserves the right to accept or reject any or all bids. No title insurance or survey will be provided. Property is being sold "as is" "where is" and "without warranty " Dickinson Independent School District does not guarantee that a title company will issue title insurance on any tax resale properties

ACCOUNT NUMBER/CAUSE NUMBER	TOTAL AMOUNT OF BID
2655-0113-0017-000/08TX0460	$5,050.00

By my signature below, I certify that I understand the conditions and limitations of this sale, as well as the restrictions on the use of the property as set forth in the Texas Property Tax Code I further understand that the "minimum bid" amount on the Dickinson Independent School District resale list may not include other taxes due which are not included in the judgment and that I will be responsible for those taxes if I am the successful bidder I agree to indemnify the Dickinson Independent School District and its agent from any action or damages arising from the purchase of this property and agree to submit any dispute to the American Arbitration Association for resolution

David Jetelina
Bidder's Name (Please Print or Type

Bidder's Signature

18118 Lakeside Lane, Nassau Bay, TX 77058
Bidder's Address (City, State, Zip Code)

713-825-2372
Bidder's Telephone

April-09-2012
Date

dj@flagshiptec.com
Bidder's E-mail address

Additional Information may be attached to this to explain your bid. Payment in full must be made within thirty (30) days of final award of bid, or bidder will forfeit bid

Lot 17 Block 113, Clifton by the Sea

BID ANALYSIS

Cause # 08TX0460
Bid Amount $5,050 00
Bidders Name David Jetelina
Strike Off Date 04-15-2011

Acct # 2655-0113-0017-000
Property Value $6,250 00
Minimum Bid at first sale $6,250 00
Redemption Expires 10-15-2011

JUDGMENT INFORMATION

Tax Entity	Tax Years	Amount Due
Dickinson ISD (inc CED)	1990-2009	$3,227 54
Galveston County	1990-2009	$1,960 80

Total: $5,188.34

COSTS

Publication Fees (Payable to Galveston County Sheriff's Department)	$1,231 12
Court Costs (Payable to Galveston County District Clerk)	$548 00
Research Fee (Payable to Lyn Wingert & Associates)	$250 00
Filing Fees- Deed Fee (Payable to Perdue, Brandon, et al)	$20 00

Total: $2,049.12

POST JUDGMENT TAXES

Entity	Tax Year	Amount due:
Dickinson ISD and Galveston County	2010-2011	$215 24

Total: $215.24

PROPOSED DISTRIBUTION

Bid Amount $5,050 00
Net to Distribute $3,000 88

Costs $2,049 12
Post Judgment $215 24*

Disburse checks as follows:

Dickinson ISD (inc CED)	62 21%	$1,866 77	Pro-rated amount for judgment years 1990-2009
Galveston County	37 79%	$1,134 11	Pro-rated amount for judgment years 1990-2009
PBFCM		$2,049 12	Costs due under law suit/ tax sale/ resale

**Purchaser will be billed for post judgment taxes once resale deed has been recorded*

Sale Date 4/5/2011 Cause Number 08TX0460 File # 100004
Judgment Date 5/17/2010

GALVESTON COUNTY, ET AL
VS
CLIFFORD ANDREW JACKSON,

Tract 1 GEO 265501130017000
LOT SEVENTEEN (17), BLOCK ONE HUNDRED THIRTEEN (113), CLIFTON BY THE SEA, GALVESTON COUNTY, TEXAS (ACCOUNT NUMBER 2655-0113-0017-000)

Description	Item Amount	Due At Sale
Taxes		
DICKINSON INDEPENDENT SCHOOL DISTRICT 1990-2009	$3,060 98	
GALVESTON COUNTY EDUCATION DISTRICT 1991-1992	$166 56	
GALVESTON COUNTY 1990-2009	$1,960 80	
Total Taxes		**$5,188.34**
Research Fees (Lyn Wingert & Associates)	$250 00	**$250 00**
Court Costs (Galveston County District Clerk)	$548 00	**$548.00**
Sheriffs Fess/Commission-Publication Fees 4-5-11 Sale & 1-4-11 Sale Fees Combined (Galveston County Sheriff's Department)	$1,231 12	**$1,231 12**
Total Due At Sale		**$7,217.45**
Appraised Value Of Property		**$6,250 00**
Minimum Bid		**$6,250 00**

SUBJECT TO THE 2010-2011 TAX YEARS

Sold To _____
(Name)

_____
(Address)

_____
(City)

Amount Received $_____

Struck Off To _____

_____
(Phone)

Notice of confidentiality rights: If you are a natural person, you may remove or strike any or all of the following information from this instrument before it is filed for record in the public records: your social security number or your driver's license number.
(Language pursuant to Section 11.008 of the Texas Property Code)

THE STATE OF TEXAS	§	
	§	RESALE DEED
COUNTY OF GALVESTON	§	

KNOW ALL MEN BY THESE PRESENTS that the DICKINSON INDEPENDENT SCHOOL DISTRICT for itself and the use and benefit of the GALVESTON COUNTY EDUCATION DISTRICT, BACLIFF MUNICIPAL UTILITY DISTRICT, COLLEGE OF THE MAINLAND and GALVESTON COUNTY, acting by and through its duly elected official ("GRANTOR") as authorized by Section 34 05, Texas Property Tax Code, for and in consideration of the sum of FIVE THOUSAND FIFTY DOLLARS AND 00/100 ($5,050 00) AND OTHER GOOD AND VALUABLE CONSIDERATION, in hand paid by DAVID JETELINA ("GRANTEE") the receipt of which is hereby acknowledged and confessed, has granted and conveyed and by these presents do grant and convey unto said grantee all right, title and interest of the DICKINSON INDEPENDENT SCHOOL DISTRICT for itself and the use and benefit of the GALVESTON COUNTY EDUCATION DISTRICT, BACLIFF MUNICIPAL UTILITY DISTRICT, COLLEGE OF THE MAINLAND and GALVESTON COUNTY, in the property herein conveyed, acquired by tax foreclosure sale heretofore held, in Cause No 08TX0460, styled Galveston County, et al vs. Clifford Andrew Jackson, et al said property being described as:

LOT SEVENTEEN (17), BLOCK ONE HUNDRED THIRTEEN (113), CLIFTON BY THE SEA, GALVESTON COUNTY, TEXAS (ACCOUNT NUMBER 2655-0113-0017-000)

GRANTOR excludes and excepts from this conveyance any warranties, express or implied, on the property, including, without limitation, any warranties arising by common law or Section 5 023 of the Property Code.

GRANTOR conveys the property

(a) "as is", "with all faults" and without any warranty as to condition or environmental hazard,

(b) subject to all restrictions, easements, rights-of-way leases, oil, gas and mineral leases, royalties, mineral conveyances, and mineral reservations of record, if any, in the office of the County Clerk of said County,

(c) subject to any right of redemption, and

(d) subject to rights of parties in possession

GRANTOR disclaims any warranty, guaranty or representation, oral or written, on

(a) the nature and condition of the property or other items conveyed hereunder, without limitation, the water, soil and geology,

(b) the suitability of the property conveyed hereunder for any and all activities and uses which GRANTEE may elect to conduct thereon,

(c) the existence of any environmental hazards or conditions thereon, (including but not limited to the presence of asbestos or other hazardous materials),

(d) compliance with applicable environmental laws, rules or regulations; and

(e) the compliance of the property with any laws, ordinances, or regulations of any governmental entity or body

By acceptance of this deed, GRANTEE acknowledges and agrees:

(a) that GRANTOR acquired the property through foreclosure of a tax lien as Trustee and as such has little, if any, knowledge of the physical or economic characteristics of the property,

(b) GRANTEE has inspected the property and is relying solely on **his** own investigation of the same and not on any information provided or to be provided by on behalf of GRANTOR,

(c) that any information provided with respect to the property was obtained from a variety of sources, and

(d). GRANTOR (1) has not made any independent investigation or verification of such information; and (2) does not make any representations as to the accuracy or completeness of such information

(e) that if there are any improvements on the property, GRANTOR shall not be responsible for or liable to GRANTEE for any construction defects, errors omissions, or any other conditions affecting the property

GRANTEE or anyone claiming by, through or under GRANTEE, hereby fully releases GRANTOR, its employees, officers, directors, representatives, attorneys and agents from any and all claims that it may now have or hereafter acquire against GRANTOR, its respective employees, officers, directors, representatives, attorneys and agents for any cost, loss, liability, damage, expense, demand, action or cause of action arising from or related to the conveyance of the premises herein as well as any construction defects, errors, omissions, or other conditions affecting the property and other items conveyed hereunder GRANTEE further acknowledges and agrees that this release shall be given full force and effect according to each of its express terms and provisions, including, but not limited to, those relating to unknown and suspected claims, damages and causes of action This covenant releasing GRANTOR shall be a covenant running with the property and shall be binding upon GRANTEE, **his**

heirs, successors, beneficiaries and assigns GRANTOR hereby assigns without recourse or representation of any nature to GRANTEE, effective upon the execution and delivery hereof, any and all claims that GRANTOR may have for any such errors, omissions or defects in the property and other items conveyed hereunder As a material covenant and condition of this conveyance, GRANTEE agrees that in the event of any such construction defects, errors, omissions or on account of any other conditions affecting the property, GRANTEE shall look solely to GRANTOR'S predecessors or to such contractors and consultants as may have contracted for work in connection with the property and other items conveyed hereunder for any redress or relief. Upon the assignment by GRANTOR of its claims, GRANTEE releases GRANTOR of all right, express or implied, GRANTEE may have against GRANTOR arising out of or resulting from any errors, omissions or defects in the property and other items conveyed hereunder GRANTEE further understands that some of GRANTOR'S predecessors in interest may be or become insolvent, bankrupt, judgment-proof or otherwise incapable of responding in damages and GRANTEE may have no remedy against such predecessors, contractors or consultants.

GRANTEE hereby further agrees on behalf of **himself** and **his** heirs, successors, beneficiaries and assigns to indemnify, protect, defend, save and hold harmless GRANTOR and GRANTOR'S elected and appointed officials, employees, officers, directors, representatives, attorney and agents from and against any and all debts, duties, obligation, liabilities, suits, claims, demands, cause of action, damages, losses, costs and expenses (including, without limitation, attorneys' fees and expenses and court costs) in any way relating to, connected with or arising out of the property and other items conveyed hereunder or the ownership, leasing, use, operation, maintenance and management thereof from and after the date hereof, including, without limitation, the cost of any removal of hazardous substances or contaminants from the property and other items conveyed hereunder

TO HAVE AND TO HOLD said premises, together with all and singular the rights, privileges and appurtenances thereto in any manner belonging unto the said DAVID JETELINA, **his** successors, beneficiaries, heirs and assigns forever, so that neither the DICKINSON INDEPENDENT SCHOOL DISTRICT for itself and the use and benefit of the GALVESTON COUNTY EDUCATION DISTRICT, BACLIFF MUNICIPAL UTILITY DISTRICT, COLLEGE OF THE MAINLAND and GALVESTON COUNTY, nor any person claiming under it shall at any time hereafter have, claim or demand any right or title to the aforesaid premises or appurtenances, or any part thereof.

Taxes for post judgment years and for the current year are assumed by, and are to be paid by GRANTEE.

Executed this _____day of _____, 2012

IN TESTIMONY WHEREOF, the taxing authorities herein have caused these presents to be executed their _____ day of _____, 2012

COPY

DICKINSON INDEPENDENT SCHOOL DISTRICT FOR
ITSELF AND AS TRUSTEE FOR THE USE AND BENEFIT OF
THE GALVESTON COUNTY EDUCATION DISTRICT

_____
FRITZIE SAMFORD
PRESIDENT, BOARD OF TRUSTEES

THE STATE OF TEXAS §
§
COUNTY OF GALVESTON §

ACKNOWLEDGMENT

BEFORE ME, the undersigned authority, on this day personally appeared, FRITZIE SAMFORD, President, Board of Trustees, Dickinson Independent School District, known to me to be the person whose name is subscribed to the foregoing instrument, and acknowledged to me that s/he executed same for the purposes and consideration therein expressed and in the capacity therein stated

GIVEN UNDER MY HAND AND SEAL OF OFFICE this _____day of

_____, 2012

_____
NOTARY PUBLIC, in and for the
STATE OF TEXAS
SEAL My Commission Expires _____

GALVESTON COUNTY

MARK HENRY
COUNTY JUDGE

THE STATE OF TEXAS §
§
COUNTY OF GALVESTON §

BEFORE ME, the undersigned authority, on this day personally appeared MARK HENRY, County Judge, Galveston County, known to me to be the person whose name is subscribed to the foregoing instrument, and acknowledged to me that he executed same for the purposes and consideration therein expressed and in the capacity therein stated.

GIVEN UNDER MY HAND AND SEAL OF OFFICE this 21st day of August 2012

ROXANA GAIL LEWIS
Notary Public State of Texas
My Commission Expires
February 14, 2015

NOTARY PUBLIC, in and for the
STATE OF TEXAS

My Commission Expires Feb. 14, 2015

BACLIFF MUNICIPAL UTILITY DISTRICT

_____
BRAD BINGHAM
PRESIDENT, BOARD OF DIRECTORS

THE STATE OF TEXAS §
§
COUNTY OF GALVESTON §

BEFORE ME, the undersigned authority, on this day personally appeared BRAD BINGHAM, President, Board of Directors, Bacliff Municipal Utility District, known to me to be the person whose name is subscribed to the foregoing instrument, and acknowledged to me that he executed same for the purposes and consideration therein expressed and in the capacity therein stated

GIVEN UNDER MY HAND AND SEAL OF OFFICE this _____day of

_____ 2012

_____
NOTARY PUBLIC, in and for the
STATE OF TEXAS

My Commission Expires _____

COLLEGE OF THE MAINLAND

_____
RALPH HOLM
BOARD OF TRUSTEES CHAIR

THE STATE OF TEXAS §
§
COUNTY OF GALVESTON §

BEFORE ME, the undersigned authority, on this day personally appeared RALPH HOLM, Board of Trustees Chair, College of the Mainland, known to me to be the person whose name is subscribed to the foregoing instrument, and acknowledged to me that he executed same for the purposes and consideration therein expressed and in the capacity therein stated.

GIVEN UNDER MY HAND AND SEAL OF OFFICE this _____day of

_____ 2012

_____
NOTARY PUBLIC, in and for the
STATE OF TEXAS

My Commission Expires· _____

Grantee DAVID JETELINA
18118 LAKESIDE LANE
NASSAU BAY, TEXAS 77058

<u>AFTER RECORDING, RETURN TO</u>:
Perdue, Brandon, Fielder, Collins & Mott, L.L.P.
1235 North Loop West, Suite 600
Houston, Texas 77008

AGENDA ITEM #21e

LINEBARGER GOGGAN BLAIR & SAMPSON, LLP
ATTORNEYS AT LAW
OFFICE ADDRESS· 518 – 9TH AVENUE NORTH, TEXAS CITY, TX 77590-6317
MAILING ADDRESS P O. DRAWER 2789, TEXAS CITY, TEXAS 77590-2789
409/948-3401
FAX 409/945-9814

Brent Richbook, Partner

Mark E Ciavaglia, Managing Partner
Mark Ciavaglia@publicans com

RECEIVED
AUG 13 2012
GALVESTON COUNTY JUDGE

August 10, 2012

Ms Renelle Lopez
Commissioner's Court
Galveston County Courthouse
722 Moody
Galveston, TX 77550

RE **CAD #5265-0000-0001-000 and 5265-0000-0019-000**
Has Not Been Approved By Commissioner's Court
Grantee: Cesar Duran

Dear Ms Lopez,

We have received an offer on the above Tax Foreclosed Property in which the County of Galveston is the Trustee This offer will need to be approved by other taxing entities as well (City of League City and Clear Creek ISD) Please schedule this for review by the Commissioner's Court Attached for the Commissioner's reference is a copy of the Bid Analysis, Bid Form, Galveston CAD Property Information and CAD Tax Map and the Proceeds Distribution Form

If this sale is approved, please have Judge Mark Henry sign the enclosed Trustee's Deed Please return the signed Trustee's Deed back to us in the enclosed envelope We will have it approved and signed by the other taxing entities

If you have any questions, please give me a call

Best regards,

Judy A Fuller
Executive Administrative Assistant to
Mark E Ciavaglia

JF encls

TAX FORECLOSURE SALE BID ANALYSIS

Galveston County, Trustee

PROPERTY DESCRIPTION

LEGAL DESCRIPTION: Lots 1 thru 4, Negro Addition to League City

LOCATION: Vacant wooded lots off of Washington St.

CAD ACCOUNT #:
5265-0000-0001-00

Land NHS $ 3,120
Imp NHS

JUDGEMENT INFORMATION

DATE SHERIFF'S SALE: 09/02/08

REDEMPTION EXPIRES: EXPIRED

CAUSE # 07TX0319

STYLED: County of Galveston, et al vs. Sam Washington, et al.

DATE DEED RECORDED:
09/09/08

RECORDING REFERENCE:
2008053073

COSTS:

GRAND TOTAL/JUDGEMENT AMT: $ 3,120.00

TAX RESALE INFORMATION

BID AMOUNT: $ 3,120.00

NAME OF BIDDER: Cesar Duran
316 Morningside Dr.
League Coty, TX 77573

RESALE OF PROPERTY

PROCEEDS DISTRIBUTION FORM

Cause Number **07TX0319** on the docket of the **122nd** District Court
COUNTY OF GALVESTON, ET AL. VS. SAM WASHINGTON, ET AL.

Property Account Number **5265-0000-0001-000**

Legal Description **LOTS ONE (1) THRU FOUR (4), IN THE NEGRO ADDITION TO LEAGUE CITY, GALVESTON COUNTY, TEXAS, SAID PROPERTY BEING MORE PARTICULARLY DESCRIBED IN THE INSTRUMENTS RECORDED AT BOOK 317, PAGE 693 AND BOOK 261, PAGE 426 IN THE OFFICIAL DEED RECORDS OF GALVESTON COUNTY, TEXAS**

Property Sold at Sheriff's Sale Conducted on SEPTEMBER 2, 2008 for **$3,120.00**

Property Re-Sold to **CESAR DURAN, 316 MORNINGSIDE DR., LEAGUE CITY, TX 77573** for **$3,120.00**

Proceeds Distribution

Payment of Costs Pursuant to Texas Property Tax Code §34 02	Original Amt Due At Sale	Actual Disbursement
(1) Advertising		
to "Galveston County Sheriff's Dept " (publication costs)	$ 515 56	$ 515 56
(2) Reimbursement - Costs, Fees		
to "Galveston County Clerk" (recording fee 2008053073)	$ -	$ 20 00
(3) Attorney Ad Litem Fees		
to "Eliza Vasquez" 305 21st St , Galveston TX 77550	$ 500 00	$ 500 00
(4) Court Costs		
to "Galveston County District Clerk"	$ 338 00	$ 338 00
(5) Title Search Fees		
to "Lyn Wingert & Associates"	$ 250 00	$ 250 00
(6) Reimbursement - Costs, Fees		
to "Galveston County" (resale advertising fees)	$ -	$ -
	$ 1,603 56	$ 1,623 56

Taxing Entity Distribution	Proportionate Share	Taxes Due at Original Sale	Resale Share/(Loss)
to "COUNTY OF GALVESTON"	0 1697567995	$ 861 85	$ 254 03
to "CLEAR CREEK INDEPENDENT SCHOOL DISTRICT"	0 6176845234	$ 3,135 97	$ 924 33
to "CITY OF LEAGUE CITY	0 2125586771	$ 1,079 15	$ 318 08
	Subtotal	$ 5,076 97	$ 1,496 44
STRUCK OFF FOR VALUE $3,120	Grand Total	$ 6,680 53	$ 3,120 00

NOTE: I PREVIOUSLY [illegible]
PLUS ANOTHER CHECK ON 6/18/12 FOR $130.00
TOTAL $3 50.00
CHECK #5617332

BID FORM
FOR TAX FORECLOSED PROPERTY

I, (We) CESAR DURAN
hereby declare and certify that

(A) I (We) are the Bidder(s) for the following properties

CAD Property # 5265 0000-0004-000, described as follows

LOT 1-4, NEGRO ADDN TO LEAGUE CITY

(B) Bid Amount $ 3,120.00

Enclosed is my (our) Cashier's Check or Money Order made payable to the **County of Galveston** in the sum of $ 350.00, which is ten percent (10%) deposit for my (our) bid or $100 00, whichever is greater Payment in full must be made within thirty (30) days of final award of bid or bidder will forfeit bid deposit

(C) I (We) agree that Galveston County reserves the right to reject any or all bids and to waive any formality in the bidding No title insurance or surveys will be provided Property is being sold "as it", "where is" and "without warranty"

(D) By my signature below, I certify that I understand the conditions and limitation of this sale I further understand that the "minimum bid" amount may not include other taxes due which were not included in the judgment and that I will be responsible for those taxes if I am the successful bidder I agree to indemnify Galveston County and its agents from any action or damages arising from the purchase of this property

(E) I/We acknowledge that neither I/We nor the entity tendering this bid owns property on which delinquent property taxes are due and owing The term 'delinquent property taxes' is defined as ad valorem taxes on either real property or business personal property for the tax year 2006 and prior tax years I/We acknowledge that my bid may be rejected if I/We own property on which delinquent taxes are due and owing

CESAR DURAN	[signature]
* Bidder(s) printed name	Bidder(s) Signature
316 MORNINGSIDE DR	713 992 1977
* Address	Phone Number
LEAGUE CITY TX	6-18 12
* City, State Zip Code	Date

***as it will appear on the Deed**

C/TX0319

Bank of America

Cashier's Check

No **5617332**

Notice to Purchaser: In the event this check is lost, misplaced or stolen a sworn statement and 90-day waiting period will be required prior to replacement. This check should be negotiated within 90 days.

Date **JUNE 18, 2012**

30-1/1140
NTX

Banking Center **CLEAR CREEK**

0005485 00004 0005617332

CESAR DURAN
Remitter (Purchased By)

43-14-3726B 09-2005

Pay ****ONE HUNDRED THIRTY DOLLARS AND 00 CENTS****

$ ****130.00****

To The Order Of ****GALVESTON COUNTY**** **** CAD #5265-0000-0001-000

Authorized Signature

Bank of America N.A.
San Antonio, Texas

VOID AFTER 90 DAYS

⑈5617332⑈ ⑆114000019⑆ 00164003755⑈

THE ORIGINAL DOCUMENT HAS REFLECTIVE WATERMARK ON THE BACK

THE ORIGINAL DOCUMENT HAS REFLECTIVE WATERMARK ON THE BACK

Bank of America

Cashier's Check

No **5514352**

Notice to Purchaser: In the event this check is lost, misplaced or stolen a sworn statement and 90-day waiting period will be required prior to replacement. This check should be negotiated within 90 days.

Date **JUNE 19, 2012**

30-1/1140
NTX

Banking Center **BAY COLONY**

0003294 00002 0005514352

CESAR DURAN
Remitter (Purchased By)

43-14-3726B 09-2005

Pay ****TWO HUNDRED TWENTY DOLLARS AND 00 CENTS****

$ ****220.00****

To The Order Of ****GALVESTON COUNTY**** **** 5265 0000 0001-000

Authorized Signature

Bank of America N.A.
San Antonio, Texas

VOID AFTER 90 DAYS

⑈5514352⑈ ⑆114000019⑆ 00164003755⑈

THE ORIGINAL DOCUMENT HAS REFLECTIVE WATERMARK ON THE BACK

THE ORIGINAL DOCUMENT HAS REFLECTIVE WATERMARK ON THE BACK

Galveston Central Appraisal District

9850 Emmett F Lowry Expressway, Ste A Texas City TX 77591, (866) 277-4725
Data on this Web site represents PRELIMINARY 2012 Information-CLICK HISTORY FOR VALU

Home
General Information
News
FAQ
Searches
- Property ID Search
- Account Search
- Owner Search
- Address Search
Property Data
- Detail Sheet
- History
- Datasheet
Other
- Taxing Units
- Neighborhoods
- Abstracts
- Subdivisions
- ARB Rules
- ONLINE Protest Info
- New Homestead Info
- Tax Code
- Calendar
- Property Codes
- County Tax Rates
- PROTEST VIDEO
- Legislative Updates
- Forms
- GIS Map Viewer
- County Tax Office
- GIS Shape Files
- PDF Map Index
- NBHD Map Index
- 3D Aerial Photos
- Links
- Contact Us
- 2012 Certified Roll
- Directory

Property Detail Sheet (R161502)

History Plat Map GIS Map Datasheet
Protest

Owner Information

Owner ID	O308027
Owner Name	COUNTY OF GALVESTON
Owner Address	TRUSTEE
	,
Property Address	

Parcel Information

Legal Description	ABST 18 PAGE 3/16 LOTS 1 THRU 4 NEGRO ADDN
Neighborhood	2515(2515 - Clear Creek Blk A)
Acreage	0 275
Cross Reference	5265-0000-0001-000
Undivided Interest	100%
Exemption Codes	EX (Exempt Property)
Entity Codes	GGA (Galveston County) S16 (Clear Creek Isd) RFL (Co Road & Flood) C40 (League City)
Deed Type	Sheriff's Deed
Deed Book	
Deed Page	2008053073
Map Page	142-B

Values Breakdown	2012 Value
Land HS	$0 +
Land NHS	$3,120 +
Improvement HS	$0 +
Improvement NHS	$0 +
Ag Market	$0
Ag Use	$0 +
Timber Market	$0
Timber Use	$0 +
Assessed	$3,120 =

Land

ID	Type	SPTB	Acre	Market
Land1	RL (Residential Lot)	C9 (Exempt Vacant Lots/tracts)		$ 780
Land2	RL (Residential Lot)	C9 (Exempt Vacant Lots/tracts)		$ 780
Land3	RL (Residential Lot)	C9 (Exempt Vacant Lots/tracts)		$ 780
Land4	RL (Residential Lot)	C9 (Exempt Vacant Lots/tracts)		$ 780

A recent version of Adobe Acrobat Reader is required to view PDF documents Acrobat Reader is a free program available here

Current Owner	Legal Description	Exemptions	Market
COUNTY OF GALVESTON (O308027) TRUSTEE	ABST 18 PAGE 3/16 LOTS 1 THRU 4 NEGRO ADDN	EX	3,120
		Entities	**Assessed**
		GGA S16, RFL, C40	3,120

Situs Address

Sales

Date	Volume	Page	Seller Name
09/02/2008	2008053073		SPRADLING JOSEPH

History Information

	2012	2011	2010	2009
Imp HS	$0	$0	$0	$0
Imp NHS	$0	$0	$0	$0
Land HS	$0	$0	$0	$0
Land NHS	$3,120	$3,120	$3 120	$3,120
Ag Mkt	$0	$0	$0	$0
Ag Use	$0	$0	$0	$0
Tim Mkt	$0	$0	$0	$0
Tim Use	$0	$0	$0	$0
HS Cap	-	-	-	-
Assessed	$3,120	$3,120	$3,120	$3,120

Building Attributes

Construction	Foundation	Exterior	Interior	Roof	Flooring

Heat/AC	Baths	Fireplace	Year Built	Rooms	Bedrooms

Land Segments

SPTB	Description	Area	Market	Ag Value
C9	Residential Lot	3000F	780	0
C9	Residential Lot	3000F	780	0
C9	Residential Lot	3000F	780	0
C9	Residential Lot	3000F	780	0

Improvements

Type	Description	Area	Year Built	Eff Year	Value

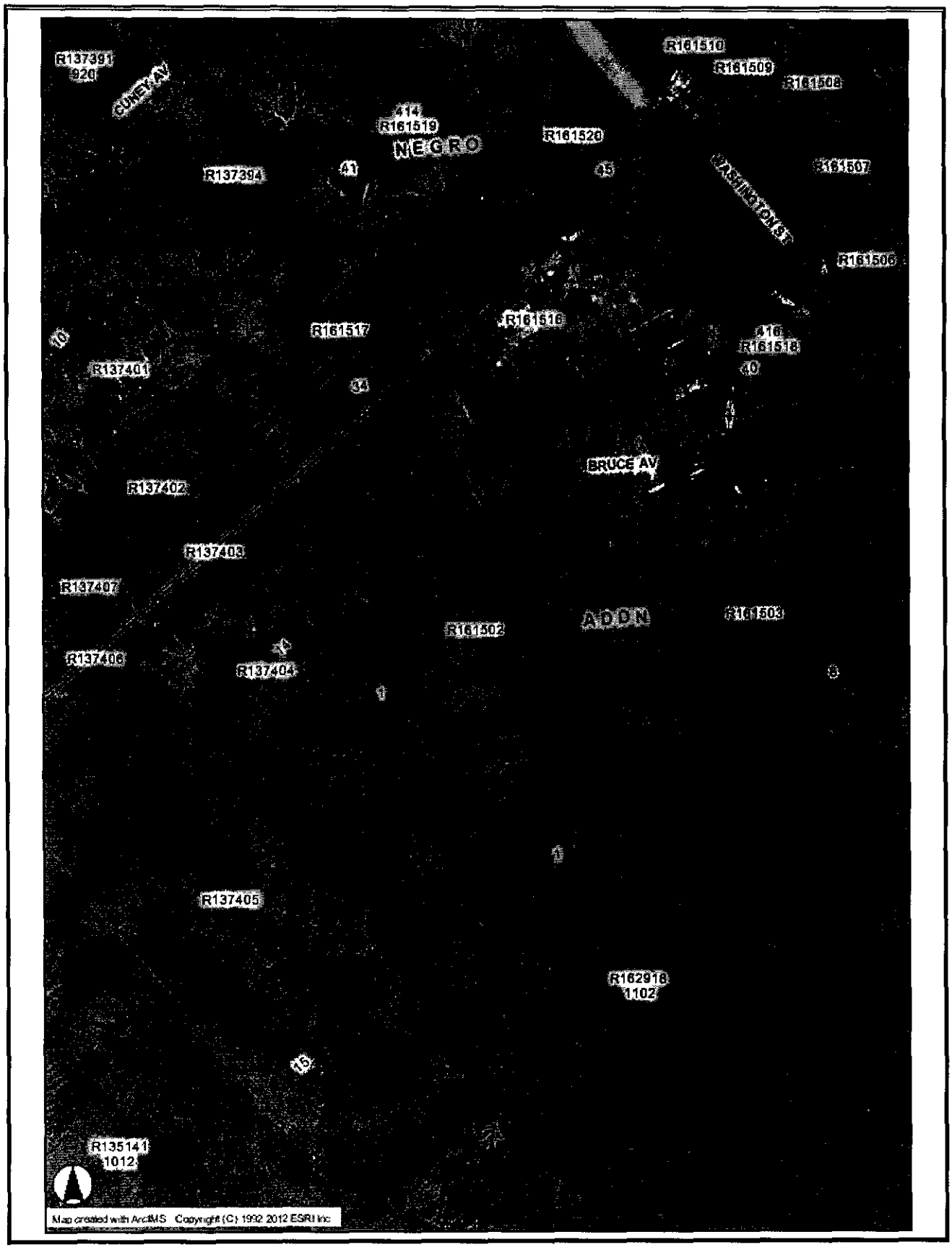
R137391
920
CUNEY AV
414
R161519
NEGRO
R161520
R161510
R161509
R161508
R161507
R137394
41
45
WASHINGTON ST
R161506
R161516
R161517
416
R161518
40
10
R137401
34
BRUCE AV
R137402
R137403
R137407
ADDN
R161503
R161502
R137406
R137404
1
8
1
R137405
R162918
1102
15
R135141
1012
Map created with ArcIMS Copyright (C) 1992 2012 ESRI Inc

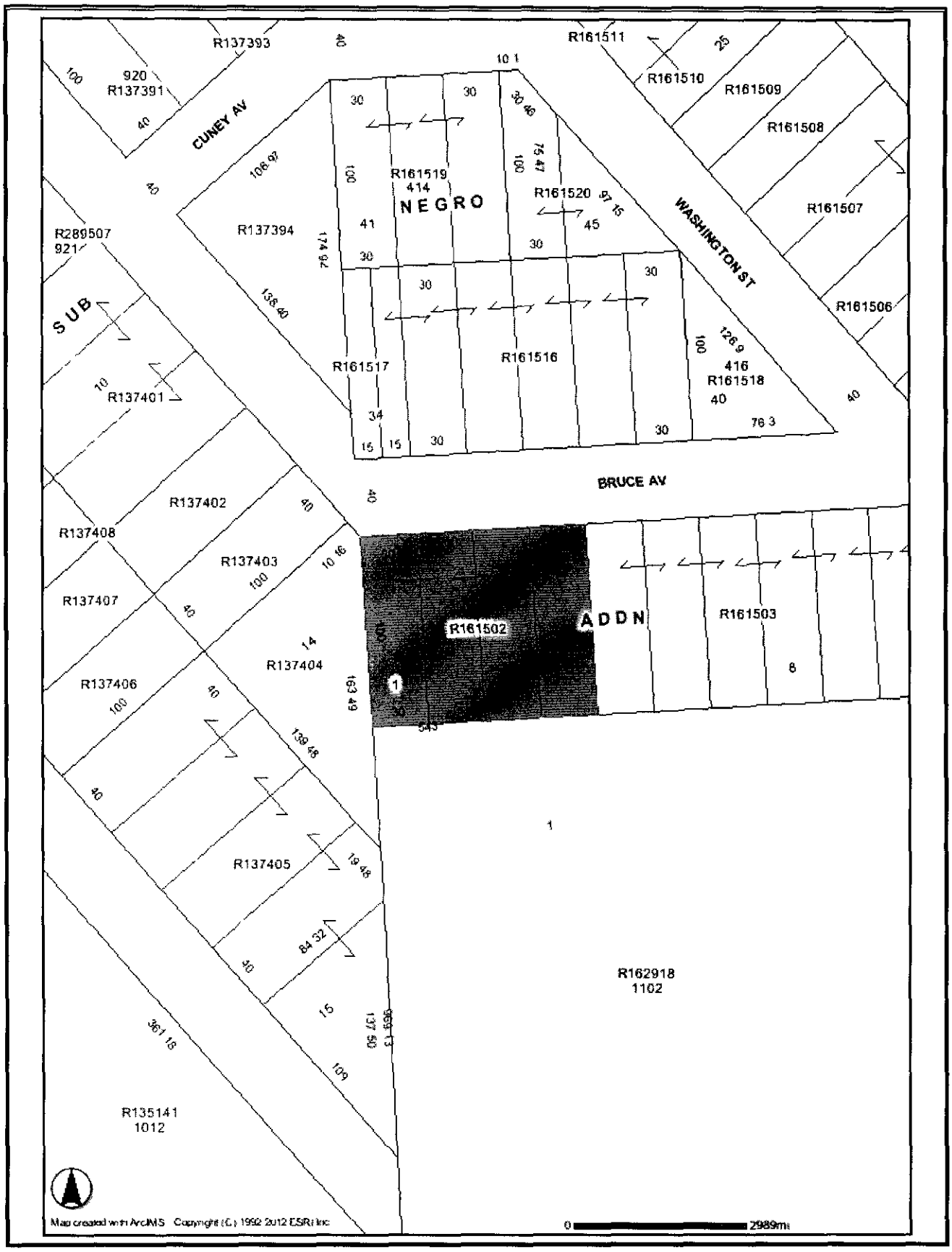
R137393
R161511
R161510
R161509
R161508
R161507
R161506
920
R137391
CUNEY AV
R161519
414
NEGRO
R161520
R137394
R289507
921
WASHINGTON ST
SUB
R137401
R161517
R161516
416
R161518
BRUCE AV
R137402
R137408
R137403
R137407
R161502
ADDN
R161503
R137404
R137406
R137405
R162918
1102
R135141
1012
Map created with ArcIMS Copyright (C) 1992 2012 ESRI Inc
0
2989mi

NOTICE OF CONFIDENTIALITY RIGHTS: IF YOU ARE A NATURAL PERSON, YOU MAY REMOVE OR STRIKE ANY OR ALL OF THE FOLLOWING INFORMATION FROM ANY INSTRUMENT THAT TRANSFERS AN INTEREST IN REAL PROPERTY BEFORE IT IS FILED FOR RECORD IN THE PUBLIC RECORDS YOUR SOCIAL SECURITY NUMBER OR YOUR DRIVER'S LICENSE NUMBER

TRUSTEE'S DEED

THE STATE OF TEXAS §
§ KNOW ALL MEN BY THESE PRESENTS
COUNTY OF GALVESTON §

WHEREAS, by Order of Sale, issued by the Galveston County District Court, **122nd** Judicial District in Cause Numbered **07TX0319** styled **"COUNTY OF GALVESTON, ET AL. VS. SAM WASHINGTON, ET AL."** the Sheriff of Galveston County, on JULY 17, 2008, seized and levied upon the right, title and interest the defendants had in the premises hereinafter described, and

WHEREAS, the Sheriff on **SEPTEMBER 2, 2008**, sold and conveyed the premises to **COUNTY OF GALVESTON** , as Trustee for itself and for **CLEAR CREEK INDEPENDENT SCHOOL DISTRICT** and **CITY OF LEAGUE CITY** for the sum of **THREE THOUSAND ONE HUNDRED TWENTY AND NO/100 DOLLARS ($3,120.00)**, it being the highest bidder therefore, and

WHEREAS, the GRANTEE named herein desires to purchase this property for the sum of **THREE THOUSAND ONE HUNDRED TWENTY AND NO/100 DOLLARS ($3,120.00)**; and

WHEREAS, this sale is authorized pursuant to V T C A , Tax Code §34 05(b)

WHEREAS this sale is authorized pursuant to an Interlocal Agreement between **COUNTY OF GALVESTON , CLEAR CREEK INDEPENDENT SCHOOL DISTRICT** and **CITY OF LEAGUE CITY** as permitted under Texas Government Code §791 011, and

NOW, THEREFORE, in consideration of the sum of **THREE THOUSAND ONE HUNDRED TWENTY AND NO/100 DOLLARS ($3,120.00)** paid by the GRANTEE named below, the receipt and sufficiency of which is acknowledged, **COUNTY OF GALVESTON , CLEAR CREEK INDEPENDENT SCHOOL DISTRICT, and CITY OF LEAGUE CITY, and ("GRANTOR"),** have GRANTED, SOLD and CONVEYED, and by these presents does GRANT, SELL and CONVEY to **CESAR DURAN**, of **316 MORNINGSIDE DR., LEAGUE CITY, TX 77573** ("GRANTEE"), the following described real property, to wit

LOTS ONE (1) THRU FOUR (4), IN THE NEGRO ADDITION TO LEAGUE CITY, GALVESTON COUNTY, TEXAS, SAID PROPERTY BEING MORE PARTICULARLY DESCRIBED IN THE INSTRUMENTS RECORDED AT BOOK 317, PAGE 693 AND BOOK 261, PAGE 426 IN THE OFFICIAL DEED RECORDS OF GALVESTON COUNTY, TEXAS

GRANTOR excludes and excepts from this conveyance any warranties, express or implied, on the property, including, without limitation, any warranties arising by common law or Section 5 023 of the Texas Property Code

GRANTOR conveys the property

a) "as is", "with all faults" and without any warranty as to condition or environmental hazard,

b) subject to all restrictions, easements, rights-of-way leases, oil, gas and mineral leases, royalties, mineral conveyances, and mineral reservations of record, if any, in the office of the County Clerk of said County,

c) subject to any right of redemption, and

d) subject to rights of parties in possession

GRANTOR disclaims any warranty, guaranty or representation, oral or written, on

a) the nature and condition of the property or other items conveyed hereunder, including, without limitation, the water, soil and geology,

b) the suitability of the property conveyed hereunder for any and all activities and uses which GRANTEE may elect to conduct thereon,

c) the existence of any environmental hazards or conditions thereon (including but not limited to the presence of asbestos or other hazardous materials),

d) compliance with applicable environmental laws, rules or regulations; and

e) the compliance of the property with any laws, ordinances, or regulations of any governmental entity or body

By acceptance of this deed, GRANTEE acknowledges and agrees:

a) that GRANTOR acquired the property through foreclosure of a tax lien as Trustee and as such has little, if any, knowledge of the physical or economic characteristics of the property,

b) GRANTEE has inspected the property and are relying solely on their own investigation of the same and not on any information provided or to be provided by on behalf of GRANTOR,

c) that any information provided with respect to the property was obtained from a variety of sources,

d) GRANTOR (1) has not made any independent investigation or verification of such information, and (2) does not make any representations as to the accuracy or completeness of such information, and

e) that if there are any improvements on the property, GRANTOR shall not be responsible for or liable to GRANTEE for any construction defects, errors, omissions, of any other conditions affecting the property

GRANTEE or anyone claiming by, through or under GRANTEE, hereby fully releases GRANTOR, its employees, officers, directors, representatives, attorneys and agents from any and all claims that it may now have or hereafter acquire against GRANTOR, its respective employees, officers, directors, representatives, attorneys and agents for any cost, loss, liability, damage, expense, demand, action or cause of action arising from or related to the conveyance of the premises herein as well as any construction defects, errors, omissions, or other conditions affecting the property and other items conveyed hereunder GRANTEE further acknowledges and agrees that this release shall be given full force and effect according to each of its express terms and provisions, including, but not limited to, those relating to unknown and suspected claims, damages and causes of action This covenant releasing GRANTOR shall be

a covenant running with the property and shall be binding upon GRANTEE, their heirs, successors, beneficiaries and assigns GRANTOR hereby assigns without recourse or representation of any nature to GRANTEE, effective upon the execution and delivery hereof, any and all claims that GRANTOR may have for any such errors, omissions or defects in the property an other items conveyed hereunder As a material covenant and condition of this conveyance, GRANTEE agrees that in the event of any such construction defects, errors, omissions or on account of any other conditions affecting the property, GRANTEE shall look solely to GRANTOR's predecessors or to such contractors and consultants as may have contracted for work in connection with the property and other items conveyed hereunder for any redress or relief. Upon the assignment by GRANTOR of its claims, GRANTEE releases GRANTOR of all right, express or implied, GRANTEE may have against GRANTOR arising our of or resulting from any errors, omissions or defects in the property and other items conveyed hereunder GRANTEE further understands that some of GRANTOR's predecessors in interest may be or become insolvent, bankrupt, judgment-proof or otherwise incapable of responding in damages, and GRANTEE may have no remedy against such predecessors, contractors or consultants.

GRANTEE hereby further agrees on behalf of himself and his heirs, successors, beneficiaries and assigns to indemnify, protect, defend, save and hold harmless GRANTOR and GRANTOR's elected and appointed officials, employees, officers, directors, representatives, attorneys and agents from and against any and all debts, duties, obligations, liabilities, suits, claims, demands, cause of action, damages, losses, costs and expenses (including, without limitation, attorneys' fees and expenses and court costs) in any way relating to, connected with or arising out of the property and other items conveyed hereunder or the ownership, leasing, use, operation, maintenance and management thereof from and after the date hereof, including, without limitation, the cost of any removal of hazardous substances or contaminants from the property and other items conveyed hereunder.

TO HAVE AND TO HOLD the above described premises together with all and singular the rights and appurtenances thereto in any wise belonging unto GRANTEE, their heirs, and assigns, forever

Taxes for the current year are to be paid by GRANTEE

EXECUTED this the 21st day of August, 2012

COUNTY OF GALVESTON

By _____
County Judge of Galveston County, Texas

STATE OF TEXAS §
§
COUNTY OF GALVESTON §

BEFORE ME, the undersigned authority, on this day personally appeared MARK J HENRY as County Judge of Galveston County, Texas, known to me to be the person whose name is subscribed to the foregoing instrument, and acknowledged to me that he executed the same for the purposes and consideration therein expressed

GIVEN under my hand and seal of office this the 21st day of August, 2012

ROXANA GAIL LEWIS
Notary Public, State of Texas
My Commission Expires
February 14, 2015

_____
NOTARY PUBLIC, in and for the State of Texas

Roxana Lewis
Printed or Typed Name of Notary

TO HAVE AND TO HOLD the above described premises together with all and singular the rights and appurtenances thereto in any wise belonging unto GRANTEE, their heirs, and assigns, forever

Taxes for the current year are to be paid by GRANTEE

EXECUTED this the _____ day of _____, 2012

CITY OF LEAGUE CITY

By _____
(Name)

_____
(Title)

STATE OF TEXAS §
§
COUNTY OF GALVESTON §

BEFORE ME, the undersigned authority, on this day personally appeared _____ as _____ of City of League City, known to me to be the person whose name is subscribed to the foregoing instrument, and acknowledged to me that he executed the same for the purposes and consideration therein expressed

GIVEN under my hand and seal of office this the _____ day of _____, 2012

_____
NOTARY PUBLIC, in and for the State of Texas

_____
Printed or Typed Name of Notary

TO HAVE AND TO HOLD the above described premises together with all and singular the rights and appurtenances thereto in any wise belonging unto GRANTEE, their heirs, and assigns, forever

Taxes for the current year are to be paid by GRANTEE

EXECUTED this the _____ day of _____, 2012

CLEEAR CREEK INDEPENDENT SCHOOL DISTRICT

By _____
(Name)

_____
(Title)

STATE OF TEXAS §
§
COUNTY OF GALVESTON §

BEFORE ME, the undersigned authority, on this day personally appeared _____ as _____ of Clear Creek Independent School District, known to me to be the person whose name is subscribed to the foregoing instrument, and acknowledged to me that he executed the same for the purposes and consideration therein expressed

GIVEN under my hand and seal of office this the _____ day of _____, 2012

_____
NOTARY PUBLIC, in and for the State of Texas

_____
Printed or Typed Name of Notary

AGENDA ITEM #21f

LINEBARGER GOGGAN BLAIR & SAMPSON, LLP
ATTORNEYS AT LAW
OFFICE ADDRESS: 518 – 9TH AVENUE NORTH, TEXAS CITY, TX 77590-6317
MAILING ADDRESS P O DRAWER 2789, TEXAS CITY, TEXAS 77590-2789
409/948-3401
FAX 409/945-9814

Brent Richbook, Partner

Mark L Ciavaglia, Managing Partner
Mark.Ciavaglia@publicans.com

RECEIVED
AUG 13 2012
GALVESTON COUNTY JUDGE

August 10, 2012

Ms Renelle Lopez
Commissioner's Court
Galveston County Courthouse
722 Moody
Galveston, TX 77550

RE **CAD #5265-0000-0001-000 and 5265-0000-0019-000**
Has Not Been Approved By Commissioner's Court
Grantee: Cesar Duran

Dear Ms Lopez,

We have received an offer on the above Tax Foreclosed Property in which the County of Galveston is the Trustee This offer will need to be approved by other taxing entities as well (City of League City and Clear Creek ISD) Please schedule this for review by the Commissioner's Court Attached for the Commissioner's reference is a copy of the Bid Analysis, Bid Form, Galveston CAD Property Information and CAD Tax Map and the Proceeds Distribution Form

If this sale is approved, please have Judge Mark Henry sign the enclosed Trustee's Deed Please return the signed Trustee's Deed back to us in the enclosed envelope We will have it approved and signed by the other taxing entities

If you have any questions, please give me a call

Best regards,

Judy A Fuller
Executive Administrative Assistant to
Mark E Ciavaglia

JF encls

TAX FORECLOSURE SALE BID ANALYSIS

Galveston County, Trustee

PROPERTY DESCRIPTION

LEGAL DESCRIPTION: Lots 19 & 20, Negro Addition to League City

LOCATION: Vacant wooded lots off of Washington St.

CAD ACCOUNT #:
5265-0000-0019-00

Land NHS $ 1,560
Imp NHS

JUDGEMENT INFORMATION

DATE SHERIFF'S SALE: 08/04/09

REDEMPTION EXPIRES: EXPIRED

CAUSE # 07TX0569

STYLED: County of Galveston, et al vs. Annie M. Davis, et al.

DATE DEED RECORDED:
08/14/09

RECORDING REFERENCE:
2008045713

COSTS:

GRAND TOTAL/JUDGEMENT AMT: $ 1,560

TAX RESALE INFORMATION

BID AMOUNT: $ 1,560.00

NAME OF BIDDER: Cesar Duran
316 Morningside Dr.
League City, TX 77573

RESALE OF PROPERTY

PROCEEDS DISTRIBUTION FORM

Cause Number **07TX0569** on the docket of the **122nd** District Court
COUNTY OF GALVESTON, ET AL. VS. ANNIE M. DAVIS, ET AL.

Property Account Number **52265-0000-0019-000**

Legal Description **LOTS NINETEEN (19) AND TWENTY (20), NEGRO ADDITION TO LEAGUE CITY, GALVESTON COUNTY, TEXAS, SAID PROPERTY DESCRIBED MORE PARTICULARLY IN THE INSTRUMENT RECORDED IN BOOK 293, PAGE 576 IN THE OFFICIAL DEED RECORDS OF GALVESTON COUNTY, TEXAS**

Property Sold at Sheriff's Sale Conducted on AUGUST 4, 2009 for **$1,560.00**

Property Re-Sold to **CESAR DURAN, 316 MORNINGSIDE DR., LEAGUE CITY, TX 77573** for **$1,560.00**

Proceeds Distribution

Payment of Costs Pursuant to Texas Property Tax Code §34 02	Original Amt Due At Sale	Actual Disbursement
(1) Advertising		
to "Galveston County Sheriffs Dept " (publication costs)	$ 597 62	$ 545 99
(2) Reimbursement - Costs, Fees		
to "Galveston County Clerk" (recording fee 2008053073)	$ -	$ 20 00
(3) Attorney Ad Litem Fees		
to "Jeffrey Gelb" 2209 Ave K, Galveston TX 77550	$ 500 00	$ 456 81
(4) Court Costs		
to "Galveston County District Clerk"	$ 338 00	$ 308 80
(5) Title Search Fees		
to "Lyn Wingert & Associates"	$ 250 00	$ 228 40
(6) Reimbursement - Costs, Fees		
to "Galveston County" (resale advertising fees)	$ -	$ -
	$ 1,685 62	$ 1,560 00

Taxing Entity Distribution	Proportionate Share	Taxes Due at Original Sale	Resale Share/(Loss)
to "COUNTY OF GALVESTON"	0 4877540386	$ 703 91	$ -
to "CLEAR CREEK INDEPENDENT SCHOOL DISTRICT"	0 0000000000	$ 1,341 18	$ -
to "CITY OF LEAGUE CITY	0 5122459614	$ 739 25	$ -
	Subtotal	$ 2,784 34	$ -
STRUCK OFF FOR VALUE $1,560	Grand Total	$ 4,469 96	$ 1,560 00

NOTE: I HAV [illegible] DEPOSIT A CASHIER'S CHECK FOR $100.00
PLUS THIS CHECK FOR $100.00 TOTAL OF $200.00 O.K
6/13/12
C.D.

CK NO. 561733

BID FORM
FOR TAX FORECLOSED PROPERTY

I, (We) CESAR DURAN
hereby declare and certify that

(A) I (We) are the Bidder(s) for the following properties

CAD Property # 5265 0000 0019-000, described as follows
LOT 19 & 20, NEGRO ADDN, LEAGUE CITY

(B) Bid Amount $ 1,560.00

Enclosed is my (our) Cashier's Check or Money Order made payable to the **County of Galveston** in the sum of $_____, which is ten percent (10%) deposit for my (our) bid or $100 00, whichever is greater Payment in full must be made within thirty (30) days of final award of bid or bidder will forfeit bid deposit

(C) I (We) agree that Galveston County reserves the right to reject any or all bids and to waive any formality in the bidding No title insurance or surveys will be provided Property is being sold "as it", "where is" and "without warranty"

(D) By my signature below, I certify that I understand the conditions and limitation of this sale I further understand that the "minimum bid" amount may not include other taxes due which were not included in the judgment and that I will be responsible for those taxes if I am the successful bidder I agree to indemnify Galveston County and its agents from any action or damages arising from the purchase of this property

(E) I/We acknowledge that neither I/We nor the entity tendering this bid owns property on which delinquent property taxes are due and owing The term 'delinquent property taxes' is defined as ad valorem taxes on either real property or business personal property for the tax year 2006 and prior tax years I/We acknowledge that my bid may be rejected if I/We own property on which delinquent taxes are due and owing

CESAR DURAN	Cesar Duran
* Bidder(s) printed name	Bidder(s) Signature
316 MORNINGSIDE DR	713 992-1977
* Address	Phone Number
LEAGUE CITY TX	6-18-12
* City, State Zip Code	Date

***as it will appear on the Deed**

07TX0569

Bank of America

Cashier's Check

No 5617333

Notice to Purchaser: In the event this check is lost, misplaced or stolen a sworn statement and 90-day waiting period will be required prior to replacement. This check should be negotiated within 90 days

Date JUNE 18, 2012

30-1/1140
NTX

Banking Center CLEAR CREEK

0005485 00004 0005617333

CESAR DURAN
Remitter (Purchased By)

$ **100.00**

Pay **ONE HUNDRED DOLLARS AND 00 CENTS**

To The Order Of **GALVESTON COUNTY**
**** CAD # 5265-0000 0019000

Authorized Signature

43-14-3726B 09-2005

Bank of America N A
San Antonio Texas

VOID AFTER 90 DAYS

⑈5617333⑈ ⑆114000019⑆ 001641003755⑈

THE ORIGINAL DOCUMENT HAS REFLECTIVE WATERMARK ON THE BACK

THE ORIGINAL DOCUMENT HAS REFLECTIVE WATERMARK ON THE BACK

Bank of America

Cashier's Check

No. 5617247

Notice to Purchaser: In the event this check is lost, misplaced or stolen, a sworn statement and 90-day waiting period will be required prior to replacement. This check should be negotiated within 90 days

Date JUNE 06, 2012

30-1/1140
NTX

~~1 900 - 0006 - 0002 - 001~~
5265-0000 - 0019 - 000

Banking Center CLEAR CREEK

0005485 00007 0005617247

CESAR DURAN
Remitter (Purchased By)

$ **100.00**

Pay **ONE HUNDRED DOLLARS AND 00 CENTS**

To The Order Of **GALVESTON COUNTY**
****

Authorized Signature

43-14-3726B 09-2005

Bank of America, N A
San Antonio Texas

VOID AFTER 90 DAYS

⑈5617247⑈ ⑆114000019⑆ 001641003755⑈

THE ORIGINAL DOCUMENT HAS REFLECTIVE WATERMARK ON THE BACK

THE ORIGINAL DOCUMENT HAS REFLECTIVE WATERMARK ON THE BACK

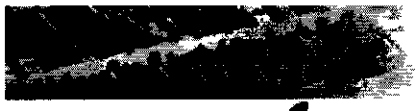

Galveston Central Appraisal District

9850 Emmett F Lowry Expressway Ste A, Texas City TX 77591 (866) 277-4725
Data on this Web site represents PRELIMINARY 2012 Information-CLICK HISTORY FOR VALU

Home
General Information
News
FAQ
Searches
- Property ID Search
- Account Search
- Owner Search
- Address Search

Property Data
- Detail Sheet
- History
- Datasheet

Other
- Taxing Units
- Neighborhoods
- Abstracts
- Subdivisions
- ARB Rules
- ONLINE Protest Info
- New Homestead Info
- Tax Code
- Calendar
- Property Codes
- County Tax Rates
- PROTEST VIDEO
- Legislative Updates
- Forms
- GIS Map Viewer
- County Tax Office
- GIS Shape Files
- PDF Map Index
- NBHD Map Index
- 3D Aerial Photos
- Links
- Contact Us
- 2012 Certified Roll
- Directory

Property Detail Sheet (R161506)

History | Plat Map | GIS Map | Datasheet | Protest

Owner Information

Owner ID	O407483
Owner Name	COUNTY-GALVESTON
Owner Address	722 MOODY AVE GALVESTON,TX 77550-2317
Property Address	

Parcel Information

Legal Description	ABST 18 PAGE 3/16 LOTS 19 & 20 NEGRO ADDN
Neighborhood	2515(2515 - Clear Creek Blk A)
Acreage	0 137
Cross Reference	5265-0000-0019-000
Undivided Interest	100%
Exemption Codes	EX (Exempt Property)
Entity Codes	GGA (Galveston County) S16 (Clear Creek Isd) RFL (Co Road & Flood) C40 (League City)
Deed Type	Sheriff's Deed
Deed Book	
Deed Page	2009045713
Map Page	142-B

Values Breakdown	2012 Value
Land HS	$0 +
Land NHS	$1,560 +
Improvement HS	$0 +
Improvement NHS	$0 +
Ag Market	$0
Ag Use	$0 +
Timber Market	$0
Timber Use	$0 +
Assessed	$1,560 =

Land

ID	Type	SPTB	Acre	Market
Land1	RL (Residential Lot)	C9 (Exempt Vacant Lots/tracts)		$ 780
Land2	RL (Residential Lot)	C9 (Exempt Vacant Lots/tracts)		$ 780

Adobe Reader A recent version of Adobe Acrobat Reader is required to view PDF documents Acrobat Reader is a free program available here

Current Owner	Legal Description	Exemptions	Market
COUNTY-GALVESTON (O407483) 722 MOODY AVE GALVESTON,TX 77550-2317	ABST 18 PAGE 3/16 LOTS 19 & 20 NEGRO ADDN	EX	1,560
		Entities	**Assessed**
		GGA, S16, RFL, C40	1 560

Situs Address

Sales

Date	Volume	Page	Seller Name
08/11/2009	2009045713		BRYANT FLORENCE

History Information

	2012	2011	2010	2009
Imp HS	$0	$0	$0	-
Imp NHS	$0	$0	$0	-
Land HS	$0	$0	$0	-
Land NHS	$1,560	$1,560	$1,560	$1,560
Ag Mkt	$0	$0	$0	-
Ag Use	$0	$0	$0	-
Tim Mkt	$0	$0	$0	-
Tim Use	$0	$0	$0	-
HS Cap	-	-	-	-
Assessed	$1,560	$1 560	$1,560	$1,560

Building Attributes

Construction	Foundation	Exterior	Interior	Roof	Flooring

Heat/AC	Baths	Fireplace	Year Built	Rooms	Bedrooms

Land Segments

SPTB	Description	Area	Market	Ag Value
C9	Residential Lot	3000F	780	0
C9	Residential Lot	3000F	780	0

Improvements

Type	Description	Area	Year Built	Eff Year	Value

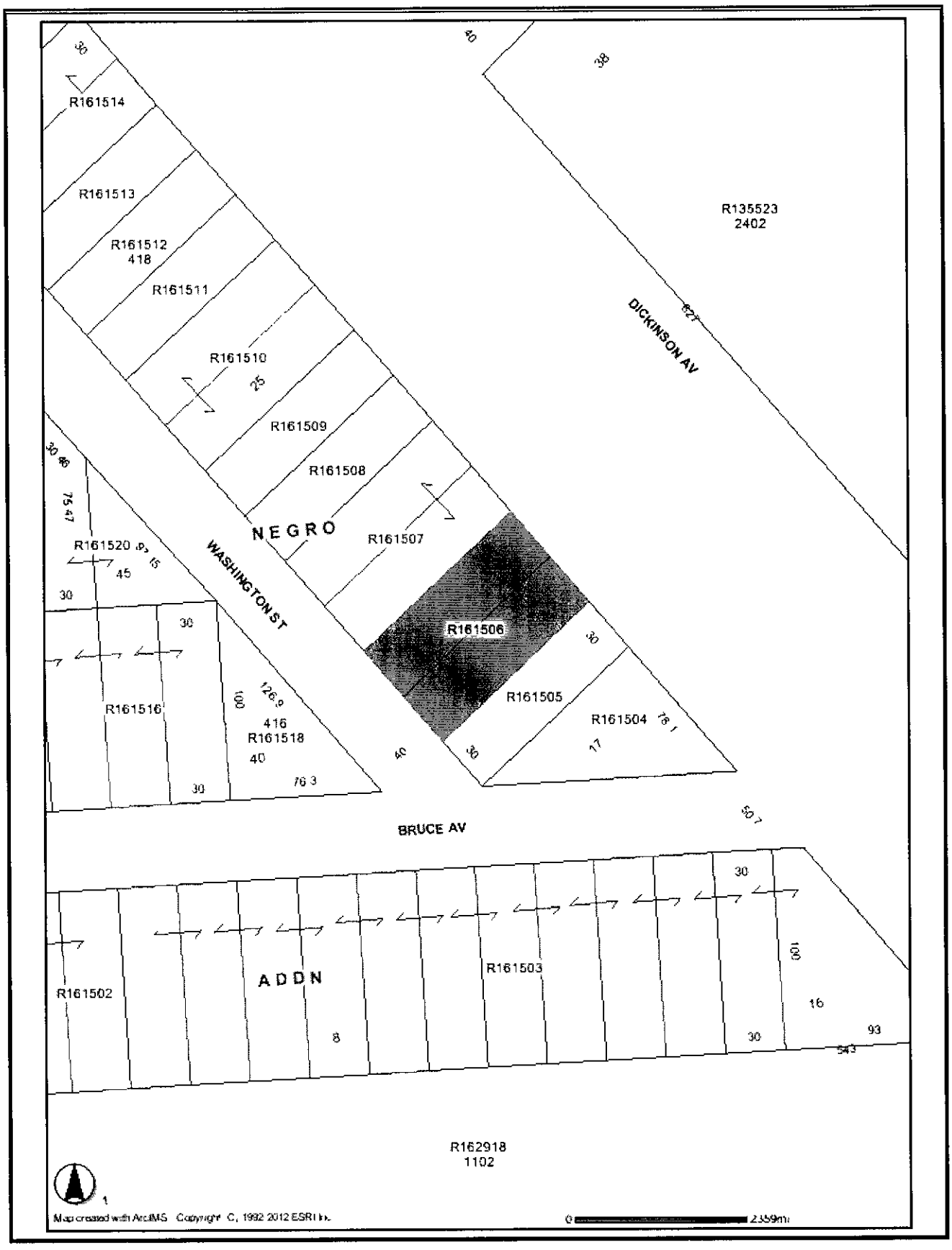
R161514
R161513
R161512
418
R161511
R161510
R161509
R161508
R161507
R161506
R161505
R161504
R161520
R161516
416
R161518
R135523
2402
DICKINSON AV
NEGRO
WASHINGTON ST
BRUCE AV
ADDN
R161502
R161503
R162918
1102
Map created with ArcIMS Copyright C, 1992 2012 ESRI Inc.
0
2359mi

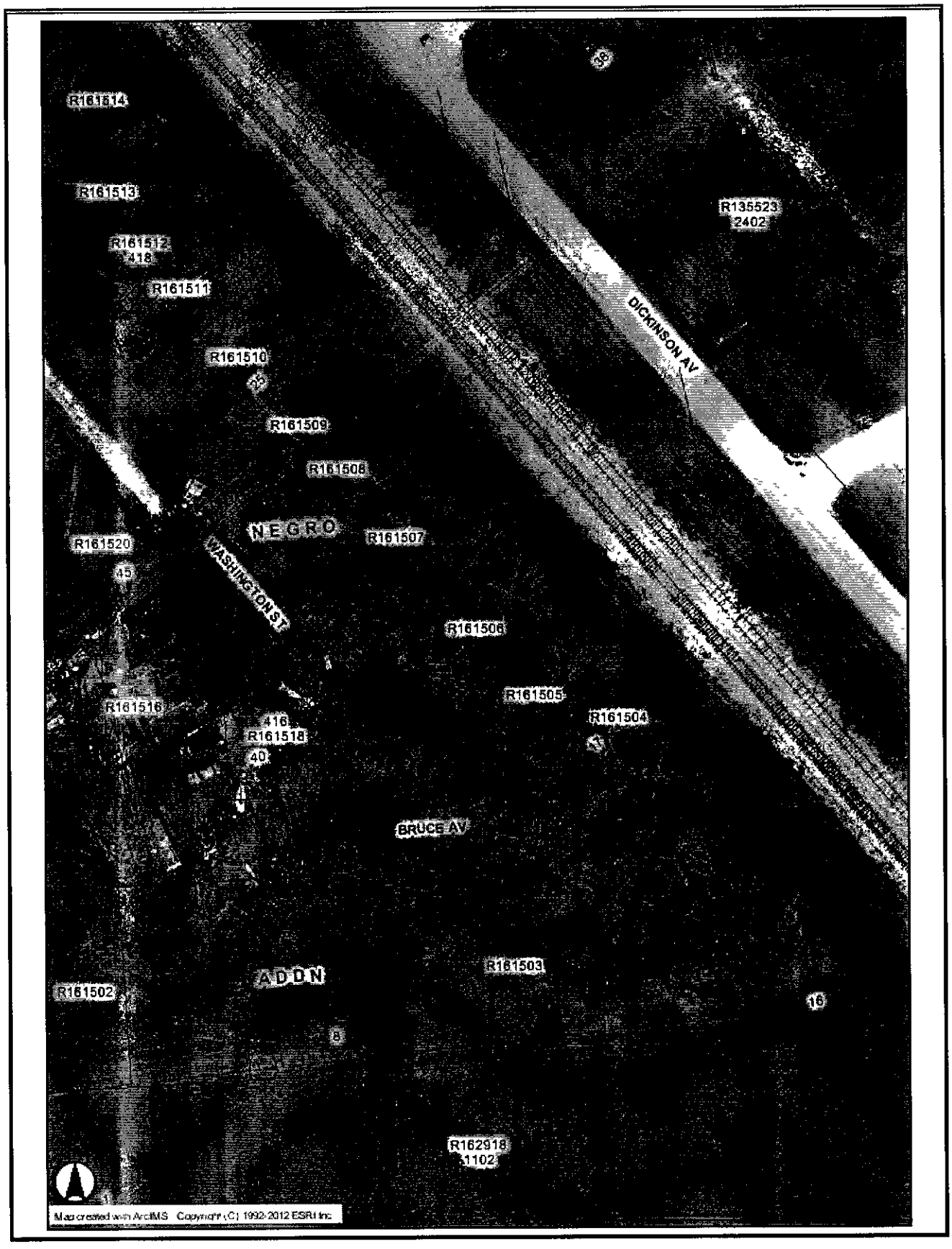
R161514
R161513
R161512
118
R161511
R161510
R161509
R161508
NEGRO
R161507
R161520
45
WASHINGTON ST
R161506
R161516
416
R161518
40
R161505
R161504
BRUCE AV
R161503
ADDN
R161502
16
R162918
1102
R135523
2402
DICKINSON AV
Map created with ArcIMS Copyright (C) 1992-2012 ESRI Inc.

NOTICE OF CONFIDENTIALITY RIGHTS: IF YOU ARE A NATURAL PERSON, YOU MAY REMOVE OR STRIKE ANY OR ALL OF THE FOLLOWING INFORMATION FROM ANY INSTRUMENT THAT TRANSFERS AN INTEREST IN REAL PROPERTY BEFORE IT IS FILED FOR RECORD IN THE PUBLIC RECORDS YOUR SOCIAL SECURITY NUMBER OR YOUR DRIVER'S LICENSE NUMBER

TRUSTEE'S DEED

THE STATE OF TEXAS §
§ KNOW ALL MEN BY THESE PRESENTS
COUNTY OF GALVESTON §

WHEREAS, by Order of Sale, issued by the Galveston County District Court, **122nd** Judicial District in Cause Numbered **07TX0569** styled **"COUNTY OF GALVESTON, ET AL. VS. ANNIE M. DAVIS, ET AL."** the Sheriff of Galveston County, on JUNE 19, 2009, seized and levied upon the right, title and interest the defendants had in the premises hereinafter described, and

WHEREAS, the Sheriff on **AUGUST 4, 2009**, sold and conveyed the premises to **COUNTY OF GALVESTON**, as Trustee for itself and for **CLEAR CREEK INDEPENDENT SCHOOL DISTRICTand CITY OF LEAGUE CITY** for the sum of **ONE THOUSAND FIVE HUNDRED SIXTY AND NO/100 DOLLARS ($1,560.00)**, it being the highest bidder therefore, and

WHEREAS, the GRANTEE named herein desires to purchase this property for the sum of **ONE THOUSAND FIVE HUNDRED SIXTY AND NO/100 DOLLARS ($1,560.00)**, and

WHEREAS, this sale is authorized pursuant to V T C A , Tax Code §34 05(b)

WHEREAS this sale is authorized pursuant to an Interlocal Agreement between **COUNTY OF GALVESTON, CLEAR CREEK INDEPENDENT SCHOOL DISTRICT** and **CITY OF LEAGUE CITY** and as permitted under Texas Government Code §791 011, and

NOW, THEREFORE, in consideration of the sum of **ONE THOUSAND FIVE HUNDRED SIXTY AND NO/100 DOLLARS ($1,560.00)** paid by the GRANTEE named below, the receipt and sufficiency of which is acknowledged, **COUNTY OF GALVESTON, CLEAR CREEK INDEPENDENT SCHOOL DISTRICT, and CITY OF LEAGUE CITY, and ("GRANTOR"),** have GRANTED, SOLD and CONVEYED, and by these presents does GRANT, SELL and CONVEY to **CESAR DURAN**, of **316 MORNINGSIDE DR., LEAGUE CITY, TX 77573** ("GRANTEE"), the following described real property, to wit

LOTS NINETEEN (19) AND TWENTY (20), NEGRO ADDITION TO LEAGUE CITY, GALVESTON COUNTY, TEXAS, SAID PROPERTY DESCRIBED MORE PARTICULARLY IN THE INSTRUMENT RECORDED IN BOOK 293, PAGE 576 IN THE OFFICIAL DEED RECORDS OF GALVESTON COUNTY, TEXAS

GRANTOR excludes and excepts from this conveyance any warranties, express or implied, on the property, including, without limitation, any warranties arising by common law or Section 5 023 of the Texas Property Code

GRANTOR conveys the property

a) "as is", "with all faults" and without any warranty as to condition or environmental hazard,

b) subject to all restrictions, easements, rights-of-way leases, oil, gas and mineral leases, royalties, mineral conveyances, and mineral reservations of record, if any, in the office of the County Clerk of said County,

c) subject to any right of redemption, and

d) subject to rights of parties in possession

GRANTOR disclaims any warranty, guaranty or representation, oral or written, on

a) the nature and condition of the property or other items conveyed hereunder, including, without limitation, the water, soil and geology,

b) the suitability of the property conveyed hereunder for any and all activities and uses which GRANTEE may elect to conduct thereon,

c) the existence of any environmental hazards or conditions thereon (including but not limited to the presence of asbestos or other hazardous materials),

d) compliance with applicable environmental laws, rules or regulations, and

e) the compliance of the property with any laws, ordinances, or regulations of any governmental entity or body

By acceptance of this deed, GRANTEE acknowledges and agrees

a) that GRANTOR acquired the property through foreclosure of a tax lien as Trustee and as such has little, if any, knowledge of the physical or economic characteristics of the property,

b) GRANTEE has inspected the property and are relying solely on their own investigation of the same and not on any information provided or to be provided by on behalf of GRANTOR,

c) that any information provided with respect to the property was obtained from a variety of sources,

d) GRANTOR (1) has not made any independent investigation or verification of such information; and (2) does not make any representations as to the accuracy or completeness of such information, and

e) that if there are any improvements on the property, GRANTOR shall not be responsible for or liable to GRANTEE for any construction defects, errors, omissions, of any other conditions affecting the property

GRANTEE or anyone claiming by, through or under GRANTEE, hereby fully releases GRANTOR, its employees, officers, directors, representatives, attorneys and agents from any and all claims that it may now have or hereafter acquire against GRANTOR, its respective employees, officers, directors, representatives, attorneys and agents for any cost, loss, liability, damage, expense, demand, action or cause of action arising from or related to the conveyance of the premises herein as well as any construction defects, errors, omissions, or other conditions affecting the property and other items conveyed hereunder GRANTEE further acknowledges and agrees that this release shall be given full force and effect according to each of its express terms and provisions, including, but not limited to, those

relating to unknown and suspected claims, damages and causes of action This covenant releasing GRANTOR shall be a covenant running with the property and shall be binding upon GRANTEE, their heirs, successors, beneficiaries and assigns GRANTOR hereby assigns without recourse or representation of any nature to GRANTEE, effective upon the execution and delivery hereof, any and all claims that GRANTOR may have for any such errors, omissions or defects in the property an other items conveyed hereunder As a material covenant and condition of this conveyance, GRANTEE agrees that in the event of any such construction defects, errors, omissions or on account of any other conditions affecting the property, GRANTEE shall look solely to GRANTOR's predecessors or to such contractors and consultants as may have contracted for work in connection with the property and other items conveyed hereunder for any redress or relief Upon the assignment by GRANTOR of its claims, GRANTEE releases GRANTOR of all right, express or implied, GRANTEE may have against GRANTOR arising our of or resulting from any errors, omissions or defects in the property and other items conveyed hereunder GRANTEE further understands that some of GRANTOR's predecessors in interest may be or become insolvent, bankrupt, judgment-proof or otherwise incapable of responding in damages, and GRANTEE may have no remedy against such predecessors, contractors or consultants

GRANTEE hereby further agrees on behalf of himself and his heirs, successors, beneficiaries and assigns to indemnify, protect, defend, save and hold harmless GRANTOR and GRANTOR's elected and appointed officials, employees, officers, directors, representatives, attorneys and agents from and against any and all debts, duties, obligations, liabilities, suits, claims, demands, cause of action, damages, losses, costs and expenses (including, without limitation, attorneys' fees and expenses and court costs) in any way relating to, connected with or arising out of the property and other items conveyed hereunder or the ownership, leasing, use, operation, maintenance and management thereof from and after the date hereof, including, without limitation, the cost of any removal of hazardous substances or contaminants from the property and other items conveyed hereunder

TO HAVE AND TO HOLD the above described premises together with all and singular the rights and appurtenances thereto in any wise belonging unto GRANTEE, their heirs, and assigns, forever

Taxes for the current year are to be paid by GRANTEE

EXECUTED this the 21st day of August, 2012

COUNTY OF GALVESTON

By _____
County Judge of Galveston County, Texas

STATE OF TEXAS §
§
COUNTY OF GALVESTON §

BEFORE ME, the undersigned authority, on this day personally appeared MARK J HENRY as County Judge of Galveston County, Texas, known to me to be the person whose name is subscribed to the foregoing instrument, and acknowledged to me that he executed the same for the purposes and consideration therein expressed

GIVEN under my hand and seal of office this the 21st day of August, 2012

ROXANA GAIL LEWIS

_____
NOTARY PUBLIC, in and for the State of Texas

Roxana Lewis
Printed or Typed Name of Notary

TO HAVE AND TO HOLD the above described premises together with all and singular the rights and appurtenances thereto in any wise belonging unto GRANTEE, their heirs, and assigns, forever

Taxes for the current year are to be paid by GRANTEE

EXECUTED this the _____ day of _____, 2012

CITY OF LEAGUE CITY

By _____
(Name)

_____
(Title)

STATE OF TEXAS §
§
COUNTY OF GALVESTON §

BEFORE ME, the undersigned authority, on this day personally appeared _____ as _____ of City of League City, known to me to be the person whose name is subscribed to the foregoing instrument, and acknowledged to me that he executed the same for the purposes and consideration therein expressed

GIVEN under my hand and seal of office this the _____ day of _____, 2012

_____
NOTARY PUBLIC, in and for the State of Texas

_____
Printed or Typed Name of Notary

TO HAVE AND TO HOLD the above described premises together with all and singular the rights and appurtenances thereto in any wise belonging unto GRANTEE, their heirs, and assigns, forever

Taxes for the current year are to be paid by GRANTEE

EXECUTED this the _____ day of _____, 2012

CLEAR CREEK INDEPENDENT SCHOOL DISTRICT

By _____
(Name)

_____
(Title)

STATE OF TEXAS §
§
COUNTY OF GALVESTON §

BEFORE ME, the undersigned authority, on this day personally appeared _____ as _____ of Clear Creek Independent School District, known to me to be the person whose name is subscribed to the foregoing instrument, and acknowledged to me that he executed the same for the purposes and consideration therein expressed

GIVEN under my hand and seal of office this the _____ day of _____, 2012

_____
NOTARY PUBLIC, in and for the State of Texas

_____
Printed or Typed Name of Notary

AGENDA ITEM #22

Cheryl E. Johnson, RTA

Assessor and Collector of Taxes
Galveston County

Galveston County Courthouse
722 Moody Avenue, Galveston, Texas 77550
Toll Free 877-766-2284 Fax 409-766-2479 Office 409-765-3277
Cheryl E Johnson@co galveston tx us

August 13, 2012

Mark Henry
County Judge
722 Moody Street
Galveston, Texas 77550

Re Tax Refunds in Excess of $2,500 00

Dear Judge Henry

In accordance with Section 31 11 (a) of the Texas Property Tax Code, I hereby request approval of the following refund (s)

Account Number	Amount	Reason
2996-0000-0208-000	$ 8,382 00	Over Payment

Sincerely,

Cheryl E. Johnson

Cheryl E Johnson, RTA

Refunds in Excess of $2,500.00

Account Number	Amount	Reason
2996-0000-0208-000	$ 8,382.00	Over Payment

TN536 SELECTION SEQUENCE 1263795 REFUNDS SELECTED REPORT
HELD OVERPAYMENT REFUNDS FROM 08/06/2012 TO 08/10/2012 MINIMUM DOLLAR AMOUNT $2500
REFUNDS REPORTED FOR INSPECTION ONLY

ACCOUNT NUMBER / UNP TOT YEAR UNIT OWNER NAME	APPR DIST #	SUIT REC TYPE	DEPOSIT RECEIPT	DATE	REMITTANCE#	STAT	AMOUNT	REFUND REASON(S)
2996-0000-0208-000	R519126		H080712M151	20120809				
2011 8001 MOORE CHLOE N		TL	1	08/09/2012	21139444	OK	8,382 00	
CHECK PAYEE MOORE CHLOE N		DIAMOND BEACH CONDOS (2010) ABST 1			CHECK TOTAL		8,382 00	
1531 HARNESS OAKS CT		UNIT 208, 0 83% COMMON AREA INTERE						
HOUSTON TX77077								

TOTAL AMOUNT DUE FOR ACCOUNT 00

TOTAL ALL ACCOUNTS 8,382 00

COUNT OF REFUND CHECKS 1 00

Cheryl E. Johnson, RTA

Assessor and Collector of Taxes
Galveston County

Galveston County Courthouse
722 Moody Avenue Galveston, Texas 77550
Toll Free 877-766-2284 Fax 409-766-2479 Office 409-765-3277
Cheryl E Johnson@co galveston tx us

August 6, 2012

Mark Henry
County Judge
722 Moody Street
Galveston, Texas 77550

Re Tax Refunds in Excess of $2,500 00

Dear Judge Henry

In accordance with Section 31 11 (a) of the Texas Property Tax Code, I hereby request approval of the following refund (s)

Account Number	Amount	Reason
5182-0218-0003-001	$ 2,816 32	Over Payment
4525-0000-0037-000	$ 2,640 55	Over Payment
2620-0000-1462-000	$ 3,494 30	Over Payment
3505-0369-0013-000	$ 3,509 68	Over Payment
3094-0000-0043-000	$ 4,884 56	Over Payment
1642-0008-0021-000	$ 2,952 16	Over Payment

Sincerely,

Cheryl E. Johnson

Cheryl E Johnson, RTA

Refunds in Excess of $2,500.00

Account Number	*Amount*	*Reason*
5182-0218-0003-001	$ 2,816.32	Over Payment
4525-0000-0037-000	$ 2,640.55	Over Payment
2620-0000-1462-000	$ 3,494.30	Over Payment
1642-0008-0021-000	$ 2,952.16	Over Payment
3505-0369-0013-000	$ 3,509.68	Over Payment
3094-0000-0043-000	$ 4,884.56	Over Payment

TN536 SELECTION SEQUENCE 1260342 REFUNDS SELECTED REPORT

HELD OVERPAYMENT REFUNDS FROM 07/30/2012 TO 08/03/2012 MINIMUM DOLLAR AMOUNT $2500

REFUNDS REPORTED FOR INSPECTION ONLY

ACCOUNT NUMBER / UNP TOT YEAR UNIT OWNER NAME	APPR DIST #	SUIT REC TYPE	DEPOSIT RECEIPT	DATE	REMITTANCE#	STAT	AMOUNT	REFUND REASON(S)
5182-0218-0003-001	R375730		730080212P	20120802				
2011 8001 HENDERSON DOROTHY R		TL	1	08/02/2012	21125661	PA	2,816 32	
CHECK PAYEE OCWEN LOAN SERVICING LLC		ABST 19 PAGE 23 PT OF LOTS 4,7,8,9 CHECK TOTAL					2,816 32	
PO BOX 24665		AND ALL OF LOT 3 (3-1) BLK 218 MOO						
WEST PALM BEACH FL33416		ADDN						

FIDO # 21975639

TOTAL AMOUNT DUE FOR ACCOUNT 00

TOTAL ALL ACCOUNTS 2,816 32

COUNT OF REFUND CHECKS 1 00

AGENDA ITEM #23

Galveston County, Texas (04/08)

COUNTY FUNDS INDEMNIFICATION REQUEST FORM

TO BE COMPLETED BY DEPARTMENT

Official's Name	Current Date	Amount of Loss
Cheryl E. Johnson	Aug 3, 2012	$20 00
Department/Division Name	**Date of Loss**	**Police Report Attached?**
Galveston County Tax Office	7/31/2012	☐ Yes ☒ No

Commissioners Court
Galveston County, Texas
Local Government Code §157 903 authorizes the commissioners court of a county by order to provide for the indemnification of an elected or appointed county officer against personal liability for the loss of county funds, or loss of or damage to personal property, incurred by the officer in the performance of official duties if the loss was not the result of the officer's negligence or criminal action. Therefore, I respectfully request Commissioners Court to approve this indemnification request and authorize the Galveston County Auditor to charge off the above amount of County funds or property, which have been determined to be missing or stolen.

Cause for Loss (Attach additional sheet if necessary)

Loss was discovered by bank personnel when processing the deposit for the Tax Office

Current Internal Controls (Attach additional sheet if necessary)

Policies and procedures are in place to reduce the risk of accepting counterfeit funds The staff has been trained by the Secret Service to detect irregularities in bills whenever possible

Additional Controls Implemented to Prevent Future Losses (If applicable) (Attach additional sheet if necessary)

The County Auditor has provided the Galveston office with a smaller machine that can detect counterfeit bills and has asked us to test the machine to see if it would be helpful in this area.

Action Taken to Recover Funds (Attach additional sheet if necessary)

Indemnification request

Signed By	Title
Cheryl E Johnson	Galveston County Tax Assessor/Collector
Official's Signature	**Date**
Cheryl E. Johnson	8/3/2012

TO BE COMPLETED BY COUNTY AUDITOR

Based upon the Auditor's Office review, the above listed loss amount being requested for indemnification:
☐ DOES appear to be accurate.
☐ DOES NOT appear to be accurate. Based upon our review, the loss amount is

After review of the circumstances, the Auditor's office recommends:
☐ Indemnification
☐ Not Indemnifying

County Auditor's Signature Date

ACCOUNT CODING TO BE USED

	FUND/DIVISION	OBJECT	AMOUNT	CHECK or JOURNAL ENTRY
DR				
CR				

TO BE COMPLETED BY COMMISSIONERS COURT

Indemnification ☒ APPROVED ☐ NOT APPROVED by Commissioners Court

Signed By

Mark Henry 8/21/12

County Judge's Signature Date

United States Secret Service

Counterfeit Note Report

INSTRUCTIONS TO BANK.

1 Prepare two copies of this form for each suspected counterfeit note.
2 Submit copies of completed form with each suspected counterfeit note to your LOCAL SECRET SERVICE OFFICE.
3 If desired, an additional copy of this form should be prepared and retained for your records.

This form is not subject to the requirements of P L 96-511 "Paperwork Reduction Act of 1980" 44 USC, Chapter 35, Section 3518 (c)(1)(A) states that, " this chapter [Chapter 35] does not apply to the collection of information during the conduct of a Federal criminal investigation "

FROM: (Indicate Bank's Name and Mailing Address (include Zip Code))

Prosperity Bank
Galveston Banking Center
2424 Market Street
Galveston, TX 77550

Telephone Number of Bank (include area code) **409-762-2103**

Point-of-Contact (include extension and e-mail address, if applicable) **Julie Kovacev/julie kovacev@prosperitybanktx.com**

DO NOT WRITE IN THIS SPACE

Classification Number

FOLD HERE

IMPORTANT NOTICE

FOLD HERE

Bank tellers and persons surrendering the note should date and initial each counterfeit note with pen and ink in the border areas of the note for identification If the person surrendering the note knows from whom he/she received it, or has a description of the passer, or his/her auto, or any other information, **TELEPHONE the local Secret Service office IMMEDIATELY** and hold the note (The telephone number of your local Secret Service office can be found in the front cover of your telephone directory) Otherwise, if no information is available, please mail the note to our local office on the day it is received

DESCRIPTION OF COUNTERFEIT NOTE OR RAISED NOTE (for raised note give serial number only)

DENOMINATION	FEDERAL RESERVE BANK (Series 1996 - Letter/Number)	CHECK LETTER/QUADRANT NO
$20	series 2006	E1

CHECK LETTER/FACE PLATE NO	BACK PLATE NO.	SERIES	SERIAL NUMBER
E375	303	2006	IE71286237D

COUNTERFEIT NOTE RECEIVED FROM

NAME OF CUSTOMER / BUSINESS	DATE OF DEPOSIT
Galveston County Tax Office	7/31/12
CUSTOMER S HOME ADDRESS	CUSTOMER S HOME PHONE A/C
P.O. Box 1169 Galveston, TX 77553-1169	409-766-2474
	CUSTOMER'S BUSINESS PHONE A/C
	409-766-2474

NAME OF PERSON SURRENDERING AND INITIALING NOTE	NAME OF TELLER RECEIVING AND INITIALING NOTE
Sheryl Swift	Valencia Williams

INFORMATION ABOUT COUNTERFEIT NOTE

DOES THE CUSTOMER HAVE ANY INFORMATION AS TO THE SOURCE OF THE COUNTERFEIT?	☐ Yes	☑ No
WAS THERE ANY SUSPICIOUS ACTIVITY?	☐ Yes	☑ No
IS THIS A NON CUSTOMER?	☐ Yes	☑ No

REMARKS

bill marks brown with counterfeit pen. bill has a odd feel

DISPOSITION (For Secret Service Use Only)

☐ Genuine note and SSF 1604 returned to bank (Receipt No. _____)

☐ Acknowledgement of Receipt returned to bank

☐ Other (Specify)

UNITED STATES SECRET SERVICE

PLEASE SUBMIT TO THE LOCAL SECRET SERVICE JURISDICTIONAL FIELD OFFICE

This form was electronically produced via OmniForm by USSS/AOMIN/MNO/PARS

SSF 1604 (03/2003)
(Previous Editions may not be used)

DEPOSIT TICKET
FOR CLEAR COPY, PRESS FIRMLY

DATE 7-[illegible]

	DOLLARS	CENTS
CURRENCY	316.1	10
COINS		
CHECKS LIST EACH SEPARATELY		
1		
2		
3		
4 747		
5 W.W.		
6		
7		
8		
9		
10	7186.33	
11		
12		
13		
14		
15		
16		
17		
18		
19		
20		
21		
22		
23		
24		
25		
26		
27		
28		
PLEASE RE-ENTER TO AL HERE TOTAL	1034803	

PLEASE BE SURE ALL ITEMS ARE PROPERLY ENDORSED

TOTAL ITEMS

CHECKS AND OTHER ITEMS ARE RECEIVED FOR DEPOSIT SUBJECT TO THE PROVISIONS OF THE UNIFORM COMMERCIAL CODE OR ANY APPLICABLE COLLECTION AGREEMENT. DEPOSITS MAY NOT BE AVAILABLE FOR IMMEDIATE WITHDRAWAL.

GALVESTON COUNTY TAX OFFICE
Tax Account - Galveston

PROSPERITY BANK® $ 1034803

7490730125

⑆113122655⑆ 7763271⑈

DEBIT PROSPERITY BANK

Galveston County Tax Office
ACCOUNT TITLE

PAREE BY APPROVE BY BC # 8 7 DATE 7 [illegible]

ACKNOWLEDGE RECEIPT OF CASH RETURNED BY SIGNING ABOVE

[illegible]

SEL CODE 165

AMOUNT

ACCOUNT NUMBER $ AMOUNT

[illegible]

⑆52[illegible]5⑈2655⑆

DIVERSIFIED BUSINESS SYSTEMS INC

Sherry
with
Tax Office
line 3

PROSPERITY BANK
GALVESTON

IDTL 124

TELLER NUMBER
5904

$

⑆113122655⑆ ⑈5900100144⑈ 804

AGENDA ITEM #24

THE COUNTY OF GALVESTON

RIGHT OF WAY /
REAL ESTATE SERVICES
722 Moody, 1st Floor
Galveston, Texas 77550

August 15, 2012

(409) 770-5577
(281) 316-8300, Ext 5577

Honorable Mark Henry, County Judge
Hon Galveston County Commissioners' Court
Galveston County Courthouse
722 Moody
Galveston, Texas 77550

Re Parcel 129 – F M 646
Limits F M 1764 to S H 6

Gentlemen

For your consideration, we are attaching original deed covering Parcel 129 required for the captioned F M 646 Project Parcel 129, consisting of 142 square feet of land and improvements (fencing & gate), was appraised at $3,699 00 TxDOT will reimburse the County for 90% of the right of way cost

If you are agreeable to accepting this transaction, please authorize issuance of check in the amount of $3,699 00 payable to Vincent Maleche The deed should be recorded in the County Clerk's Official Public Records After recording, please have the original instrument returned to the Right of Way Department

Yours very truly,

Claudette Fickessen

Claudette Fickessen

cf
Encl

cc Commissioners Kevin O'Brien, Precinct 2
Mr Mike Fitzgerald, P E , County Engineer

Notice of Confidentiality Rights: If you are a natural person, you may remove or strike any of the following information from this instrument before it is filed for record in the public records: your Social Security Number or your Driver's License Number.

Form ROW-N-14
(Rev 08/11)

DEED

STATE OF TEXAS	§	**ROW CSJ:** 0978-01-032
	§	**Parcel 129, F.M. 646**
COUNTY OF GALVESTON	§	

WHEREAS, the Texas Transportation Commission is authorized under the Texas Transportation Code Chapters 203, 224, and 228 to purchase land and such other property rights (including requesting that counties and municipalities acquire highway right of way) deemed necessary or convenient to a state highway or turnpike project to be constructed, reconstructed, maintained, widened, straightened, or extended, or to accomplish any other purpose related to the location, construction, improvement, maintenance, beautification, preservation, or operation of a state highway or turnpike project, and

WHEREAS, the Texas Transportation Commission is also authorized under Texas Transportation Code, Chapter 203 to acquire or request to be acquired such other property rights deemed necessary or convenient for the purposes of operating a state highway or turnpike project, with control of access as necessary to facilitate the flow of traffic and promote the public safety and welfare on both non-controlled facilities and designated controlled access highways and turnpike projects,

NOW, THEREFORE, KNOW ALL MEN BY THESE PRESENTS:

That, **Vincent Maleche, without joinder of my wife as the property herein conveyed is my separate property and estate, occupying and claiming other property as my homestead**, of the County of Galveston, State of Texas, hereinafter referred to as Grantors, whether one or more, for and in consideration of the sum of Three Thousand, Six Hundred and Ninety-Nine & no/100 Dollars ($3,699 00) to Grantors in hand paid by the State of Texas, acting by and through the Texas Transportation Commission, hereinafter sometimes referred to as Grantee, receipt of which is hereby acknowledged, and for which no lien is retained, either expressed or implied, have this day Sold and by these presents do Grant, Bargain, Sell and Convey unto the State of Texas all that certain tract or parcel of land lying and being situated in the County of Galveston, State of Texas, more particularly described in Exhibit "A," which is attached hereto and incorporated herein for any and all purposes

SAVE and **EXCEPT, HOWEVER,** it is expressly understood and agreed that Grantors are retaining title to the following improvements located on the property described in said Exhibit "A" to wit

Gate & Fencing

Grantors covenant and agree to remove the above-described improvements from said land by the December 31, 2012, subject, however, to such extensions of time as may be granted by Grantee, its successor and assigns, in writing, and if, for any reason, Grantors fail or refuse to remove same within said period of time prescribed, then, without any further consideration, the title to all or any part of such improvements not so removed shall pass to and vest in the grantee, its successors and assigns, forever

Grantors reserve all of the oil, gas and sulphur in and under the land herein conveyed but waive all rights of ingress and egress to the surface thereof for the purpose of exploring, developing, mining or drilling for same, however, nothing in this reservation shall affect the title and rights of the Grantee, its successors and assigns, to take and use all other minerals and materials thereon, therein and thereunder

Grantors hereby acknowledge that their use of and access to the state highway facilities and/or turnpike project to be constructed in conjunction with the highway facility of which the land hereby conveyed shall become a part (herein called Highway Facility), shall be and forever remain subject to the same regulation by legally constituted authority as applies to the public's use thereof, and Grantors further acknowledge that the design and operation of such Highway Facility requires that rights of ingress and egress and the right of direct access to and from Grantors' remaining property (if any) to said Highway Facility, shall hereafter be governed by the provisions set out in said Exhibit "A", **SAVE AND EXCEPT** in the event access, or access points may be specifically allowed or permitted in said Exhibit "A", such access shall be subject to such regulation as is determined by the Texas Department of Transportation and/or the Texas Turnpike Authority Division to be necessary in the interest of public safety and in compliance with approved engineering principles and practices and subject to compliance with any applicable local municipal or county zoning, platting and/or permit requirements

TO HAVE AND TO HOLD the premises herein described and herein conveyed together with all and singular the rights and appurtenances thereto in any wise belonging unto the State of Texas and its assigns forever, and Grantors do hereby bind ourselves, our heirs, executors, administrators, successors and assigns to Warrant and Forever Defend all and singular the said premises herein conveyed unto the State of Texas and its assigns against every person whomsoever lawfully claiming or to claim the same or any part thereof

IN WITNESS WHEREOF, this instrument is executed on this the 3 day of August, 2012 vm

Vincent Maleche

Vincent Maleche

Acknowledgement

State of Texas
County of Galveston

This instrument was acknowledged before me on August 3, 2012, by Vincent Maleche

Notary Public's Signature

RAYMOND R. RAMNARINE
Notary Public
STATE OF TEXAS
My Comm. Exp 03-11-15

EXHIBIT A

County Galveston
Highway FM 646
Limits. From FM 517 to SH 6
ROW CSJ 0978-01-032
ROW Account 8012-02-068

Property Description for
Parcel 129

BEING a 0 003 of one acre (142 square feet) parcel of land located in the William Kelly Survey, Abstract No 139, Galveston County, Texas, being a portion of Lot 25 of Langford Subdivision of record in Volume 254-A, Page 70 of the Galveston County Map Records, Texas (G C M R), said Lot 24 conveyed to James Knowles and wife, Ada Knowles by deed of record in Clerk File No 9938607, Film Code No 013-79-1062 of the Official Public Records of Real Property Galveston County, Texas (O P R O R P G C), said 0 003 of one acre being more particularly described as follows

COMMENCING at a bent 1/2-inch iron rod found at the southwesterly corner of said Lot 25, being the northeasterly corner of Lot 24 of said Langford Subdivision, thence as follows,

THENCE, North 88°02'13" East, along the northerly line of said Lot 24, being the southerly line of said Lot 25, a distance of 156 54 feet to a 5/8-inch iron rod with aluminum cap stamped "TxDOT" set in the proposed westerly right-of-way line of FM 646, being in a curve to the right and for the POINT OF BEGINNING of the herein described parcel having surface coordinates of X = 3,213,102 36, Y = 13,709,688 57,

1) THENCE, in a northwesterly direction, along the proposed westerly right-of-way line of FM 646 and along said curve to the right, having a radius of 1,492 00 feet, a central angle of 02°53'51", an arc length of 75.45 feet and a chord bearing of North 10°12'46" West, a distance of 75 44 feet to a 5/8-inch iron rod with aluminum cap stamped "TxDOT" set in the northerly line of said Lot 25, being the southerly line of Lot 26 of said Langford Subdivision,

2) THENCE, North 88°02'13" East, along the northerly line of said Lot 25, being the southerly line of said Lot 26, a distance of 3 24 feet to a point in the existing westerly right-of-way line of FM 646 (100 foot right-of-way) recorded in Volume 735, Page 481, of the Galveston County Deed Records, being the northeasterly corner of said Lot 25, same being the southeasterly corner of said Lot 26 and also being in a curve to the left,

3) THENCE, in a southeasterly direction, along the existing westerly right-of-way line of FM 646, being the easterly line of said Lot 25, and along said curve to the left having a radius of 1,004 93 feet, a central angle of 04°17'06", an arc length of 75 16 feet and a chord bearing of South 08°25'32" East, a distance of 75 14 feet to a point marking the southeasterly corner of said Lot 25, being the northeasterly corner of said Lot 24, from which a 1/2-inch iron rod found bears North 87°57' East, a distance of 1 02 feet,

EXHIBIT A

4) THENCE, South 88°02'13" West, along the northerly line of said Lot 24, being the southerly line of said Lot 25, a distance of 0 87 feet to the POINT OF BEGINNING and containing 0 003 of one acre (142 square feet) of land

Notes

All bearings and coordinates are based on the Texas Coordinate System, South Central Zone, North American Datum 1983 (1996 Adjustment), all distances and coordinates are surface an may be converted to grid by dividing by a combined adjustment factor of 1 00013

** The monument described and set in this call may be replace with a TxDOT Type II right-of-way marker upon completion of the highway construction project under the supervision of a Registered Professional Land Surveyor, either employed or retained by TxDOT

Access is permitted to the highway facility from the remainder of the property adjacent to this parcel

A plat of even survey date herewith accompanies this property description.

I certify that the survey was performed on the ground under my supervision on August 15, 2003

Prepared By.

GeoSolutions, Ltd
1440 Lake Front Circle, Suite 110
The Woodlands, Texas 77380
Tel 281-681-9766

STATE OF TEXAS
REGISTERED
4968
PROFESSIONAL
LAND SURVEYOR

4-18-06

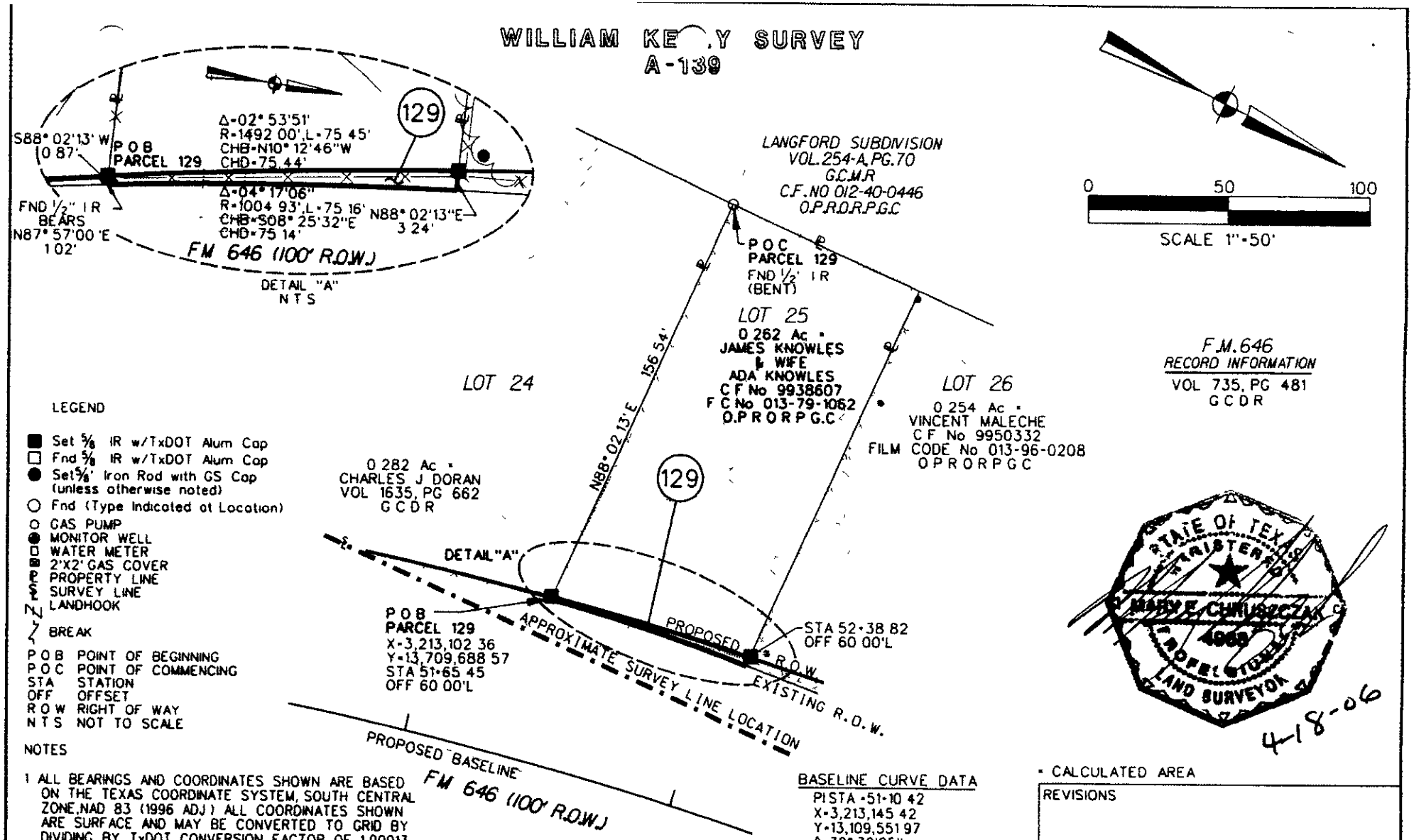

LEGEND

- ■ Set 5/8 IR w/TxDOT Alum Cap
- □ Fnd 5/8 IR w/TxDOT Alum Cap
- ● Set 5/8" Iron Rod with GS Cap (unless otherwise noted)
- ○ Fnd (Type Indicated at Location)
- O GAS PUMP
- ◉ MONITOR WELL
- ▫ WATER METER
- ▣ 2'X2' GAS COVER
- ℄ PROPERTY LINE
- ℄ SURVEY LINE
- LANDHOOK
- BREAK

P O B POINT OF BEGINNING
P O C POINT OF COMMENCING
STA STATION
OFF OFFSET
R O W RIGHT OF WAY
N T S NOT TO SCALE

NOTES

1 ALL BEARINGS AND COORDINATES SHOWN ARE BASED ON THE TEXAS COORDINATE SYSTEM, SOUTH CENTRAL ZONE, NAD 83 (1996 ADJ) ALL COORDINATES SHOWN ARE SURFACE AND MAY BE CONVERTED TO GRID BY DIVIDING BY TxDOT CONVERSION FACTOR OF 1 00013

2 **THE MONUMENT DESCRIBED AND SET IN THIS CALL MAY BE REPLACED WITH A TxDOT TYPE II RIGHT OF WAY MARKER UPON THE COMPLETION OF THE HIGHWAY CONSTRUCTION PROJECT UNDER THE SUPERVISION OF A REGISTERED PROFESSIONAL LAND SURVEYOR, EITHER EMPLOYED OR RETAINED BY TxDOT

3 THIS MAP IS BASED ON ABSTRACTING PERFORMED BY POSTLE PROPERTY SERVICES IN MAY 2003 MAP COMPLETED IN APRIL, 2006

4 PROPERTY DESCRIPTION OF EVEN DATE HAS BEEN PREPARED IN CONJUNCTION WITH THIS PARCEL PLAT

5 ACCESS IS PERMITTED TO THE HIGHWAY FACILITY FROM THE REMAINDER OF THE PROPERTY ADJACENT TO THIS PARCEL

BASELINE CURVE DATA
PI STA =51+10 42
X=3,213,145 42
Y=13,109,551 97
Δ=30° 30'25"
R=1432 00', L=762 46'
CHB=N17° 10'12"W,
CHD=753 49'

JOHN BRENNAN SURVEY
A-42

DEED REFERENCES WITH VOL AND PG ARE OF THE GALVESTON COUNTY DEED RECORDS
G C M R INDICATES GALVESTON COUNTY PLAT RECORDS, AND C F INDICATES CLERKS FILE NO OF THE OFFICIAL PUBLIC RECORDS OF REAL PROPERTY OF GALVESTON COUNTY

* CALCULATED AREA

REVISIONS
1

EXISTING	TAKING	REMAINING
0 262 Ac	0 003 Ac 142 Sq Ft	0 259 Ac

GeoSolutions, Ltd
Tel (281) 681-9766 Fax (281) 681-9779

PARCEL 129
FM 646
GALVESTON COUNTY TEXAS
R O W C S J 0978-01-032

DATE APRIL, 2006 | SCALE 1" = 50'

PARCEL 129
ACCOUNT NO 8012-02-068

\dgn\FM646_PAR129.dgn 4/18/2006 8 40 46 AM by n_potts

FILED AND RECORDED

OFFICIAL PUBLIC RECORDS

2012045132

August 21, 2012 04 33 29 PM

FEE $32 00

Dwight D Sullivan, County Clerk

Galveston County, TEXAS

AGENDA ITEM #25a

Gaspard, Amanda

From. Nicholson, Connie
Sent· Tuesday, August 14, 2012 2 38 PM
To agenda
Subject· FW Galveston Collaborative 4th Quarter IGT
Attachments. Galveston Collaborative 4th Quarter IGT

Categories: On Agenda

Please place the following on the agenda for August 21st

Consideration of authorizing the transfer of $250,000 for the State Non Federal Share Private Hospital Medicaid fund (UPL), made in concert with the affiliated private hospitals of Galveston and neighboring counties submitted by the Community Services Director

Connie Nicholson

Gaspard, Amanda

From Jessica D Cottey [cottey@gl-law com]
Sent Wednesday, August 01, 2012 1 43 PM
To· Nicholson, Connie, LeBoeuf, Joanie
Cc Frances Hansen, Jessica D Cottey
Subject Galveston Collaborative 4th Quarter IGT

Connie and Joanie,

There is a lot of uncertainty over when HHSC will request the IGT for the fourth quarter of 2012 At this time, I anticipate the IGT will be requested between mid-August and mid-September Our estimates indicate that the IGT for Galveston County will be between $374,000 and $520,000 I will let you know as soon as we receive more specific information, but wanted to give you as much advance notice as possible

Jessica Cottey, Attorney
GJERSET & LORENZ, LLP
Phone (512) 899-3995
Fax (512) 899-3939

Caution this communication may be subject to attorney-client privilege and/or attorney work product Please do not forward this communication without permission If you have received this communication in error, please contact us immediately

AGENDA ITEM #26a

GALVESTON COUNTY ENGINEERING DEPARTMENT

Change Order No. 3
Owens Drive Improvements (from F M 517 North of Night Shade Drive)

Owner Galveston County
Contractor Metro City Construction, LP
Engineer: Travis S Sellers P E

Contract Number 1306-005-00
Purchase Order Number C109685
Bid Number B111045

Work Being Changed

CHANGE IN CONTRACT PRICE

Original Contract Price $1,634,288 75

Net Change From
Previous Change Orders $98,452 23

Contract Price Prior To
This Change Order $1,744,634 98

Net Increase/Decrease Of
This Change Order $-84,699 83

Contract Price With All
Approved Change Orders $1,659,935 15

CHANGE IN CONTRACT TIME

Original Contract Time 150 Days

Net Change From
Previous Change Orders: 20 Days

Contract Time Prior To
This Change Order: 169 Days

Net Increase/Decrease Of
This Change Order 0 Days

Contract Time With All
Approved Change Orders: 169 Days

RECOMMENDED
By _____
Engineer (Consultant)

By _____ Date. 8-21-12
Engineer (County Engineer)

APPROVED
County Of Galveston

By _____ Date 8/21/12
Mark Henry, County Judge

Attest _____
Dwight Sullivan, County Clerk

By: Brandy Chapman Deputy
Brandy Chapman

ACCEPTED
Contractor

By Orrell Espree, Jr. Date: 4-10-12
Contractor (Authorized Signature)

Orrell Espree, Jr.
Printed Name

Sr. Project Manager

Orrell Espree, Jr. 7-2-12

GALVESTON COUNTY ENGINEERING DEPARTMENT

Change Order No. 3
Owens Drive Improvements (from F M 517 North of Night Shade Drive)

					ORIGINAL + PREVIOUSLY REVISED		NEW		
Pay Item No	Spec Item No	DESCRIPTION	UNIT	UNIT PRICE	QUANTITY	ITEM COST	QUANTITY	ITEM COST	OVERRUN/UNDERRUN
7		Prepare & compact 6" Lime Stabilized Sub-grade	S Y	$2 00	10,100 00	$20,200 00	9,324 00	2 00	-$1,552 00
8		Furnish Lime (6% by Dry Weight)	TON	$139 70	165 00	$23,050 50	155 44	139 70	-$1,335 53
9		Furnish and Install 8" Reinforced Concrete Pavement	S Y	$35 80	9,900 00	$354,420 00	9,855 86	35 80	-$1,580 21
10		Construct & Pave 6" Concrete Driveways	S Y	$39 00	1,100 00	$42,900 00	1,141 59	$39 00	$1,622 01
12		Furnish & Install 6" Reinforced Concrete Curb	L.F	$2 05	5,500 00	$11,275 00	5,389 05	$2 05	-$227 45
17		Remove & Relocate Existing Traffic Signs	EA	$410 00	11 00	$4,510 00	9 00	$410 00	-$820 00
19		Furnish & Install Reflectorized Pavement Markings - Type I 4" Yellow Solid	L F.	$0.45	5,250 00	$2,362 50	5,470 00	$0 45	$99 00
21		Furnish & Install Reflectorized Pavement Markings - Type I 12" White Solid	L F	$2 25	80 00	$180 00	647 00	$2 25	$1,275 75
22		Furnish & Install Refelctorized Pavement Markings - Type I 24" White Solid	L F	$4 50	200 00	$900 00	298 00	$4 50	$441 00
27		Furnish & Install Inlet Protection Barrier	L F.	$5.00	800 00	$4,000 00	750 00	$5 00	-$250 00
47		Furnish & Install 36" RCP (Class III C-76), All Depths	L F	$74 00	170 00	$12,580 00	160 00	$74 00	-$740 00
48		Furnish & Install 48" RCP (Class III C-76), All Depths	L F	$109 00	685 00	$74,665 00	683 00	$109 00	-$218 00
58		Trench Safety System for Construction of Storm Sewer	L.F	$0 10	4,420 00	$442.00	3,776 00	$0 10	-$64 40

GALVESTON COUNTY ENGINEERING DEPARTMENT

Change Order No 3
Owens Drive Improvements (from F.M. 517 North of Night Shade Drive)

					ORIGINAL + PREVIOUSLY REVISED		NEW		
Pay Item No	Spec Item No	DESCRIPTION	UNIT	UNIT PRICE	QUANTITY	ITEM COST	QUANTITY	ITEM COST	OVERRUN/UNDERRUN
65		Furnish Borrow as Directed	C Y	$8.00	100 00	$800 00	0.00	$8 00	-$800 00
67		Extra Select Backfill as Directed	C Y	$18 00	100 00	$1,800 00	0 00	$18 00	-$1,800 00
68		Extra Bank-Sand Backfill as Directed	C Y	$20 00	100 00	$2,000 00	0 00	$20.00	-$2,000.00
69		Extra Steel Reinforcing as Directed	LBS	$0 50	4,000 00	$2,000 00	0 00	$0 50	-$2,000 00
71		Extra Class "A" Concrete with Reinforcing Steel including Forming	C Y	$250 00	200 00	$50,000 00	0 00	$250 00	-$50,000.00
72		Extra Machine Excavation as Directed	C Y	$10 00	100 00	$1,000 00	0 00	$10 00	-$1,000 00
73		Extra Hand Excavation as Directed	C Y	$15.00	100 00	$1,500 00	0 00	$10 00	-$1,500 00
74		Furnish & Install 4" Waterline Adjustment as Directed	EA.	$1,500 00	2 00	$3,000 00	1 00	$1,500 00	-$1,500 00
75		Furnish & Install 8" Waterline Adjustment as Directed	EA.	$2,500 00	4 00	$10,000 00	3 00	$2,500 00	-$2,500 00
76		Furnish & Install 10" Waterline Adjustment as Directed	EA	$2,750 00	4 00	$11,000 00	0 00	$2,750 00	-$11,000 00
77		Remove & Replace 4" Sanitary Sewer as Directed	EA.	$1,500 00	1 00	$1,500 00	0 00	$1,500 00	-$1,500.00
78		Remove & Replace 4" Sanitary Sewer as Directed	EA	$1,750 00	4 00	$7,000 00	3 00	$1,750.00	-$1,750 00
79		Remove & Replace 4" Sanitary Sewer as Directed	EA.	$2,000 00	2 00	$4,000 00	0 00	$2,000.00	-$4,000 00
		TOTAL							-$84,699.83

AGENDA ITEM #26b

GALVESTON COUNTY ENGINEERING DEPARTMENT

Change Order No 3
Improvements to Deats Road from GH&H to FM 1266

Owner Galveston County
Contractor RW Lucas Construction
Engineer County Engineer

Contract Number 1052
Purchase Order Number. C206001
Bid Number B121017

Work Being Changed

Add 2 drainage inlets, add 12 stop signs, adjust quantities for 24", 30" & 36" RCP, adjust filter fence quantities, remove mailbox, reduce UPRR allowance, revise striping at FM 1266: Total 2,308.62

CHANGE IN CONTRACT PRICE

Original Contract Price· $841,976 00
Net Change From
Previous Change Orders $42,860 00
Contract Price Prior To
This Change Order $884,836 00
Net ***Increase***/Decrease Of
This Change Order $2,308 62
Contract Price With All
Approved Change Orders· $887,144 62

CHANGE IN CONTRACT TIME

Original Contract Time	100 Days
Net Change From Previous Change Orders	27 Days
Contract Time Prior To This Change Order	127 Days
Net Increase/Decrease Of This Change Order	30 Days
Contract Time With All Approved Change Orders	157 Days

RECOMMENDED

By· Mike [signature] Date 8-21-12
Engineer (County Engineer)

APPROVED
County Of Galveston

By [signature] Date. 8/21/12
Mark Henry, County Judge

Attest
Dwight Sullivan, County Clerk

By: Brandy Chapman Deputy
Brandy Chapman

ACCEPTED
Contractor

By [signature] Date 8-21-12
Contractor (Authorized Signature)

Dustin Johnson
Printed Name

GALVESTON COUNTY ENGINEERING DEPARTMENT

Change Order No 3
Improvements to Deats Road from GH&H to FM 1266

					ORIGINAL + PREVIOUSLY REVISED		NEW		
Pay Item No	Spec Item No	DESCRIPTION	UNIT	UNIT PRICE	QUANTITY	ITEM COST	QUANTITY	ITEM COST	OVERRUN/UNDERRUN
7		Mailboxes	LS	$1,260 00	1 00	$1,260.00	0.00	0 00	-$1,260.00
20		Stop Signs	EA	$450 00	-	-	12.00	$5,400.00	$5,400 00
29		Striping Allowance	LS	$3,500.00	1 00	$3,500 00	1 00	$2,562 90	-$937 10
30		Filter Fence Install	LF	$2.00	1,562 00	$3,124 00	1,093 40	$2,186 80	-$937 20
31		Filter Fence Removal	LF	$1 00	1,562.00	$1,562.00	1,093.40	$1,093.40	-$468 60
36		24" RCP	LF	$59 00	149 00	$8,791.00	130 00	$7,670 00	-$1,121 00
37		30" RCP	LF	$75 00	33 00	$2,475.00	42.00	$3,150.00	$675 00
38		36" RCP	LF	$91 00	116 00	$10,556.00	162 00	$14,742 00	$4,186 00
5		UPRR Allowance	LS	$10,000 00	1	$10,000 00	1.00	$1,300 00	-$8,700.00
NA		Drain Inlets	EA	$1,735.16	-	-	2 00	$3,471 52	$3,471 52
NA		Revise Striping at FM 1266	LS	$2,000 00	-	-	1 00	$2,000 00	$2,000 00
		TOTAL							$2,308 62

AGENDA ITEM #26c

GALVESTON COUNTY ENGINEERING DEPARTMENT

Change Order No 3
Paving and Drainage Improvements for Louisiana Avenue

Owner Galveston County
Contractor Angel Brothers Enterprises, Ltd
Engineer McDonough Engineering Corporation

Contract Number
Purchase Order Number C001588
Bid Number B111043

Work Being Changed

DELETIONS

Items related to drainage system revisions per RFI Nos. 11 and 11 1A (Work Change Directive No 8) as noted in the following pages

ADDITIONS

Items related to drainage system revisions per RFI Nos 8, 9, 11 and 11 1A (Work Change Directive Nos 5, 6 and 8) as noted in the following pages

CHANGE IN CONTRACT PRICE		CHANGE IN CONTRACT TIME	
Original Contract Price.	$5,306,986.40	Original Contract Time	425 Days
Net Change From Previous Change Orders	$291,709 00	Net Change From Previous Change Orders	30 Days
Contract Price Prior To This Change Order	$5,598,695 40	Contract Time Prior To This Change Order	455 Days
Net Increase/Decrease Of This Change Order	$18,485 50	Net Increase/Decrease Of This Change Order	0 Days
Contract Price With All Approved Change Orders	$5,617,180 90	Contract Time With All Approved Change Orders	455 Days

RECOMMENDED

By _____ Date 5/17/12
Engineer (Consultant)

By _____ Date 6/5/12
Engineer (City of League City)

By Mike Fitzgerald Date 8/3/12
Engineer (County Engineer)

APPROVED
County Of Galveston

By _____ Date 8/21/12
Mark Henry, County Judge

Attest _____
Dwight Sullivan, County Clerk

By: Brandy Chapman Deputy
Brandy Chapman

ACCEPTED
Contractor

By _____ Date 6/5/12
Contractor (Authorized Signature)

Robert Carter, Vice President
Printed Name

GALVESTON COUNTY ENGINEERING DEPARTMENT

Change Order No 3
Paving and Drainage Improvements for Louisiana Avenue

					ORIGINAL + PREVIOUSLY REVISED		NEW		
Pay Item No	Spec Item No	DESCRIPTION	UNIT	UNIT PRICE	QUANTITY	ITEM COST	QUANTITY	ITEM COST	OVERRUN/UNDERRUN
WORK CHANGE DIRECTIVE NO 5 - RFI NO. 8									
-	465	Modifications to Storm Trooper on the north side of the 42-inch storm sewer	L S	$4,634 50	0 00	$0 00	1 00	$4,634 50	$4,634 50
WORK CHANGE DIRECTIVE NO 6 - RFI NO. 9									
-	465	Move the proposed storm sewer manhole 4 feet to the west at Sta 55+60	L S	$204 00	0 00	$0 00	1 00	$204 00	$204 00
WORK CHANGE DIRECTIVE NO 8 - RFI NOS. 11 AND 11.1A									
ADDITIONS									
-	464	18-inch Arch (RCAP)- Lateral	LF	$85 00	0 00	$0 00	95 00	$8,075 00	$8,075 00
-	465	Type "C" Inlet (Modified) to match "revised" lateral elevation	EA	$2,250 00	0 00	$0 00	1 00	$2,250.00	$2,250 00
-	465	Type "B-B" Inlet (Modified) to match "revised" lateral elevation	EA	$2,500 00	0 00	$0 00	6 00	$15,000 00	$15,000 00
-	465	Type "C-1" Inlet (Modified) to match "revised" lateral elevation	EA	$3,000 00	0 00	$0 00	2 00	$6,000 00	$6,000 00
-	465	Type "C" Manhole (Modified) to match "revised" lateral elevation	EA	$3,000 00	0 00	$0 00	1 00	$3,000 00	$3,000 00
-	465	Rack Over Existing Type "B-B" Inlet - 2nd Stage	EA	$350 00	0 00	$0 00	1 00	$350 00	$350 00
128	464	Furnish & Install 18-inch RCP, ASTM C76, CL III with R G JTS	LF	$45 00	101 00	$4,545 00	74 00	$3,330 00	$3,330 00
129	464	Furnish & Install 24-inch RCP ASTM C76, CL III with R G JTS	LF	$51 00	3,510 00	$179,010 00	2 00	$102 00	$102 00

GALVESTON COUNTY ENGINEERING DEPARTMENT

Change Order No. 3
Paving and Drainage Improvements for Louisiana Avenue

					ORIGINAL + PREVIOUSLY REVISED		NEW		
Pay Item No	Spec Item No	DESCRIPTION	UNIT	UNIT PRICE	QUANTITY	ITEM COST	QUANTITY	ITEM COST	OVERRUN/UNDERRUN
ADDITIONS (CONTINUED)									
136	465	Type "C" Inlet, All Depths	EA	$1,500 00	12 00	$18,000 00	3 00	$4,500 00	$4,500 00
138	465	Type "B-B" Inlet, All Depths	EA	$1,700 00	44 00	$74,800 00	1 00	$1,700 00	$1,700 00
140	465	Standard Precast Type "C" Manhole for 42-inch RCP and Smaller, All Depths	EA	$2,150 00	25 00	$53,750 00	1 00	$2,150 00	$2,150 00
DELETIONS:									
129	464	Furnish & Install 24-inch RCP, ASTM C76, CL III with R G	LF	$51 00	3,510 00	$179,010 00	(160 00)	($8,160 00)	-$8,160 00
136	465	Type "C" Inlet, All Depths	EA	$1,500 00	12 00	$18,000 00	(2 00)	($3,000 00)	-$3,000 00
137	465	Type "C-1" Inlet, All Depths	EA	$2,100 00	12 00	$25,200 00	(2 00)	($4,200 00)	-$4,200 00
138	465	Type "B-B" Inlet, All Depths	EA	$1,700 00	44 00	$74,800 00	(9 00)	($15,300 00)	-$15,300 00
140	465	Standard Precast Type "C" Manhole for 42-inch RCP and Smaller, All Depths	EA	$2,150 00	25 00	$53,750 00	(1 00)	($2,150 00)	-$2,150 00
		TOTAL							$18,485 50

Notes

1 Galveston County Responsibility this Change Order $18,485 50
2 City of League City Responsibility this Change Order $ 0

AGENDA ITEM #26d

APPLICATION FOR PERMISSION TO CONVEY BY METES AND BOUNDS PROPERTY DESCRIPTIONS, PORTIONS OF PREVIOUSLY PLATTED LOTS, WITHOUT REVISING THE PLAT

THE COMMISSIONERS COURT
OF GALVESTON COUNTY, TEXAS

TO THE HONORABLE COMMISSIONERS' COURT OF GALVESTON COUNTY, TEXAS

NOW COMES W R MILLER as General Partner of the W R MILLER FAMILY PARTNERSHIP, LTD and RANDALL BUTLER as President of BUTLER ASSET HOLDINGS, LLC and files this Petition and Application for permission to convey, by metes and bounds property descriptions, portions of Lot 4, Tract 4-A, in Block 2, and portions of Tract 5-A and 6-A, two tracts as approved by Commissioners' Court as recorded in County Clerk File No 2010033108, in Galveston County, Texas, all in Block 2, COPACABANA BY THE SEA, a subdivision in Galveston County, Texas, according to the map or plat thereof recorded in Plat Record 17, Map No 70 without revising the plat There shall be no changes in the streets, drainage or any other lines as presently reflected in the Plat In support thereof, Petitioners would respectfully show into the Court the following, to wit

A copy of a survey, with metes and bounds property descriptions, depicting the portions of said Lot 4, Tract 4-A, Tract 5-A and Tract 6-A, all in Block 2, COPACABANA BY THE SEA, a subdivision in Galveston County, Texas, according to the map or plat thereof recorded in Plat Record 17, Map No 70 attached hereto as EXHIBIT "A" and EXHIBIT "B"

TRACT 4-B being Lot 4, Tract 4-A, and the West portion of Tract 5-A
TRACT 6-B being The East portion of Tract 5-A and all of Tract 6-A

1 Only Lot 4, Tract 4-A, Tract 5-A and Tract 6-A, in Block 2, are to be involved in these conveyances Petitioners are the sole owners of said Lot 4, Tract 4-A, Tract 5-A and Tract 6-A, all in Block 2, COPACABANA BY THE SEA

2 The proposed revision will not interfere with the established rights of any owner of any other part of the subdivided land, save and except the lands of said W R MILLER and RANDALL BUTLER, Petitioners herein

3 Petitioners are willing and prepared to pay to the County any appropriate administrative cost or fees which may be incurred in the processing of the Application and Petition

4 The petitioners understand that approval of this metes and bounds document does not guarantee approval of water well or sewer permits or building permits and that water, sewer and building permits are separate issues

WHEREFORE, Petitioners pray that upon final hearing hereof, this Honorable Court adopt an Order granting permission to the Petitioners to convey portions of said Lot 4, Tract 4-A, Tract 5-A and Tract 6-A, all in Block 2, COPACABANA BY THE SEA all as per the survey plat and metes and bounds property descriptions shown in Exhibit "A" and Exhibit "B" attached hereto, and that this Honorable Court enter such further orders and take such further action as may be proper

EXECUTED this 20 day of July 2012

W. R. Miller
BY W R MILLER, General Partner
W R MILLER FAMILY PARTNERSHIP, LTD
885 19th Street
Beaumont, TX 77706

THE STATE OF Texas

COUNTY OF Galveston

BEFORE ME, the undersigned authority on this day personally appeared Petitioner W R MILLER to me to be the person whose name is subscribed to the above and foregoing instrument and acknowledged to me that he executed the same for the purposes and consideration therein expressed

WITNESSED MY HAND AND SEAL OF OFFICE this the 20th day of July, 2012

Linda C Richardson
Notary Public-State of Texas

LINDA C RICHARDSON
Notary Public State of Texas
My Commission Expires
April 16, 2016

EXECUTED this 2nd day of August 2012

BY RANDALL BUTLER, President
Butler Asset Holdings, LLC
7610 Water Wood Trail
Kingwood, TX 77346

THE STATE OF Texas

COUNTY OF Harris

BEFORE ME, the undersigned authority on this day personally appeared Petitioner RANDALL BUTLER to me to be the person whose name is subscribed to the above and foregoing instrument and acknowledged to me that he executed the same for the purposes and consideration therein expressed

WITNESSED MY HAND AND SEAL OF OFFICE this the 2 day of Aug, 2012

Notary Public-State of Texas

MELISSA FAYE NEWMAN
Notary Public, State of Texas
My Commission Expires
December 22, 2014

APPROVED

BY MARK HENRY
County Judge

9/4/12
Date

ATTEST
DWIGHT SULLIVAN
County Clerk

12-0823 M&B Application Miller-Butler

COASTAL SURVEYING OF TEXAS, INC
GALVESTON OFFICE
8017 HARBORSIDE DRIVE
P O BOX 877 (mailing)
GALVESTON, TX 77553
ph (409) 740-1517 fx (409) 740-0377
CRYSTAL BEACH OFFICE
975 LAZY LANE WEST
P O BOX 2742 (mailing)
CRYSTAL BEACH, TX 77650
ph (409) 684-6400 fx (409) 684-6112
WWW SURVEYGALVESTON COM

Exhibit "A"

TRACT 4-B, Block 2 - COPACABANA BY THE SEA

Being the combination of the West portion of Tract 5-A, in Block 2, a tract as approved by Galveston County Commissioners Court as recorded in County Clerk File Number 2010033108, Galveston County Deed Records, Galveston County, Texas, also Lot 4, and a Tract 4-A, a 0.31 acre tract, in Block 2, out of COPACABANA BY THE SEA, a subdivision in Galveston County, Texas, according to the map or plat thereof recorded in Plat Record 17, Map Number 70, Galveston County Plat Records, said Tract 4-B being more particularly described by metes and bounds as follows
BEGINNING at the Northwest corner of said Lot 4, Block 2,
THENCE North 67°12'30" East, along the South line of Carioca Court (60 foot row), a distance of 24 13 feet to a point a curve to the right,
THENCE with a curve turning to the right with an arc length of 32 18 feet, with a radius of 50.00 feet, with a chord bearing of N 85°38'36" E and a chord length of 31 62 feet to a point in a curve to the left,
THENCE a curve turning to the left with an arc length of 51 32 feet, with a radius of 50 00 feet, with a chord bearing of N 74°46'57" E and a chord length of 49 10 feet to a point,
THENCE crossing said Tract 5-A, South 41°03'38" East, a distance of 98 49 feet,
THENCE continuing across said Tract 5-A, South 22°47'39" East, a distance of 152 40 feet to the South line of said Tract 5-A and the North line of Copacabana Drive (60 foot row),
THENCE S 63°41'45" W, along the North line of said Copacabana Drive, a distance of 132 92 feet to the Southwest corner of said Tract 4-A,
THENCE N 22°47'30" W, along the West line of said Tract 4-A and Lot 4, Block 2, a distance of 270 60 feet to the POINT OF BEGINNING, having an area of 0 751 Acres

TRACT 6-B, Block 2 - COPACABANA BY THE SEA

Being the combination of the East portion of Tract 5-A, all of Tract 6-A, in Block 2, tracts as approved by Galveston County Commissioners Court as recorded in County Clerk File Number 2010033108, Galveston County Deed Records, Galveston County, Texas, out of COPACABANA BY THE SEA, a subdivision in Galveston County, Texas, according to the map or plat thereof recorded in Plat Record 17, Map Number 70, Galveston County Plat Records, said Tract 6-B being more particularly described by metes and bounds as follows
BEGINNING at the Northeast corner of said Tract 6-A,
THENCE South 43°52'25" East, along the East line of said Tract 6-A, a distance of 280 52 feet,
THENCE South 59°45'06" West, along the South line of said Tract 6-A, a distance of 111 73 feet;
THENCE South 25°38'51" East, along the East line of said Tract 5-A, a distance of 50 60 feet to the South line of said Tract 5-A and the North line of Copacabana Drive (60 foot row),
THENCE South 63°41'45" West, along the South line of said Tract 5-A, a distance of 48 77 feet,
THENCE crossing said Tract 5-A, North 22°47'39" West, a distance of 152 40 feet,
THENCE continuing across said Tract 5-A, N 41°03'38" W, a distance of 98 49 feet to the South line of Carioca Court, a 50 foot row and Curve to the Left,
THENCE with a curve turning to the left with an arc length of 74 77 feet, with a radius of 50 00 feet, with a chord bearing of N 02°27'37" E and a chord length of 68 01 feet to the POINT OF BEGINNING, having an area of 0 759 Acres

EXHIBIT 'B'

SCALE: 1" = 50'

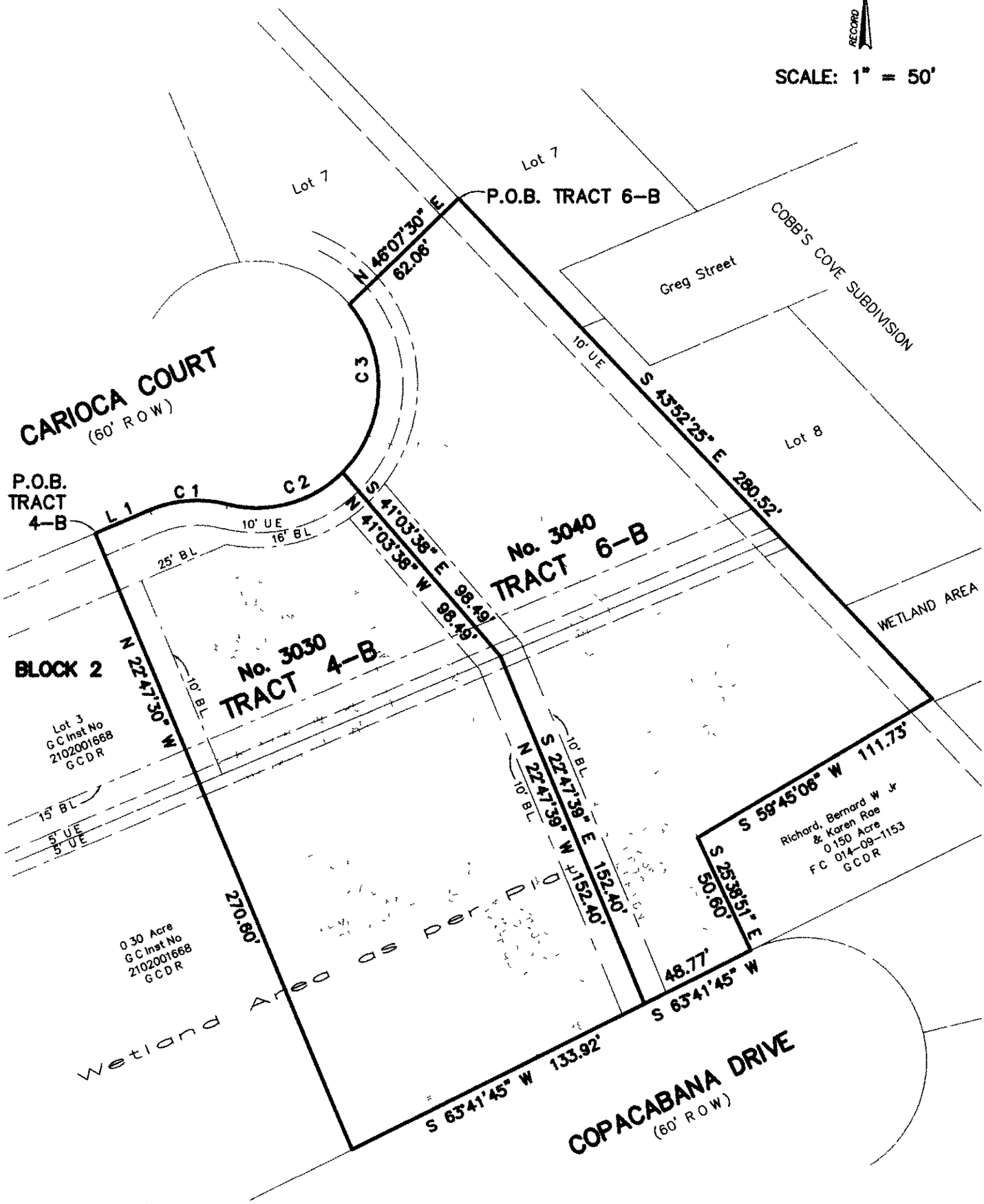

LINE TABLE

Line	Bearing	Distance
L 1	N67°12'30"E	24 13'

CURVE TABLE

Curve	Radius	Arc Length
C 1	50'	32 18'
C 2	50'	51 32'
C 3	50'	74 77'

LEGEND

B L Building Setback Line
U E Utility Easement

12-0823

COASTAL SURVEYING OF TEXAS, INC

GALVESTON OFFICE
8017 HARBORSIDE DRIVE
P O. BOX 877 (mailing)
GALVESTON, TX 77553
ph (409) 740-1517 fx (409) 740-0377

CRYSTAL BEACH OFFICE
975 LAZY LANE WEST
P O BOX 2742 (mailing)
CRYSTAL BEACH, TX 77650
ph (409) 684-6400 fx (409) 684-6112

WWW SURVEYGALVESTON COM

2012047815

6 PGS

CERTIFIED COPY
GALVESTON COUNTY COMMISSIONERS' COURT

RE: AGENDA ITEM NO. 26d

Consideration of application from W R Miller as General Partner of the W R Miller Family Partnership, LTD and Randall Butler as President of Butler Asset Holdings, LLC to convey portions of Lot 4, Tract 4-A, in Block 2 and portions of Tract 5-A and 6-A, Block 2, Copacabana by the Sea subdivision on Bolivar Peninsula by metes & bounds without revising the plat

Motion to Approve by Commissioner Doyle, seconded Commissioner O'Brien by that the above action be taken by the Court

Passed 5-0

Aye County Judge Henry, Commissioner Doyle, Commissioner O'Brien, Commissioner Holmes, Commissioner Clark
Nay (None)
Abstain (None)
Absent (None)

STATE OF TEXAS §

COUNTY OF GALVESTON §

I, Dwight D. Sullivan, Clerk County Court and Ex-Officio Clerk of the Commissioners' Court of Galveston County, Texas, do hereby certify that the attached is a true and correct copy of that certain·

RE: AGENDA ITEM NO. 26d

as passed by the Commissioners' Court on the 21st day of August, 2012, REGULAR Term of Commissioners' Court and as the same appear(s) in the Commissioners' Court Records of Galveston County, Texas.

GIVEN UNDER MY HAND AND SEAL OF OFFICE, this the 4th DAY OF SEPTEMBER, A. D., 2012.

DWIGHT D SULLIVAN, Clerk County Court
and Ex-Officio Member of the Commissioners'
Court of Galveston County, Texas

By. Brandy Chapman
Brandy Chapman, Deputy

APPLICATION FOR PERMISSION TO CONVEY BY METES AND BOUNDS PROPERTY DESCRIPTIONS, PORTIONS OF PREVIOUSLY PLATTED LOTS, WITHOUT REVISING THE PLAT

THE COMMISSIONERS COURT
OF GALVESTON COUNTY, TEXAS

TO THE HONORABLE COMMISSIONERS' COURT OF GALVESTON COUNTY, TEXAS

NOW COMES W R MILLER as General Partner of the W R MILLER FAMILY PARTNERSHIP, LTD and RANDALL BUTLER as President of BUTLER ASSET HOLDINGS, LLC and files this Petition and Application for permission to convey, by metes and bounds property descriptions, portions of Lot 4, Tract 4-A, in Block 2, and portions of Tract 5-A and 6-A, two tracts as approved by Commissioners' Court as recorded in County Clerk File No 2010033108, in Galveston County, Texas, all in Block 2, COPACABANA BY THE SEA, a subdivision in Galveston County, Texas, according to the map or plat thereof recorded in Plat Record 17, Map No 70 without revising the plat There shall be no changes in the streets, drainage or any other lines as presently reflected in the Plat In support thereof, Petitioners would respectfully show into the Court the following, to wit

A copy of a survey, with metes and bounds property descriptions, depicting the portions of said Lot 4, Tract 4-A, Tract 5-A and Tract 6-A, all in Block 2, COPACABANA BY THE SEA, a subdivision in Galveston County, Texas, according to the map or plat thereof recorded in Plat Record 17, Map No 70 attached hereto as EXHIBIT "A" and EXHIBIT "B"

TRACT 4-B being Lot 4, Tract 4-A, and the West portion of Tract 5-A
TRACT 6-B being The East portion of Tract 5-A and all of Tract 6-A

1 Only Lot 4, Tract 4-A, Tract 5-A and Tract 6-A, in Block 2, are to be involved in these conveyances Petitioners are the sole owners of said Lot 4, Tract 4-A, Tract 5-A and Tract 6-A, all in Block 2, COPACABANA BY THE SEA

2 The proposed revision will not interfere with the established rights of any owner of any other part of the subdivided land, save and except the lands of said W R MILLER and RANDALL BUTLER, Petitioners herein

3 Petitioners are willing and prepared to pay to the County any appropriate administrative cost or fees which may be incurred in the processing of the Application and Petition

4 The petitioners understand that approval of this metes and bounds document does not guarantee approval of water well or sewer permits or building permits and that water, sewer and building permits are separate issues

WHEREFORE, Petitioners pray that upon final hearing hereof, this Honorable Court adopt an Order granting permission to the Petitioners to convey portions of said Lot 4, Tract 4-A, Tract 5-A and Tract 6-A, all in Block 2, COPACABANA BY THE SEA all as per the survey plat and metes and bounds property descriptions shown in Exhibit "A" and Exhibit "B" attached hereto, and that this Honorable Court enter such further orders and take such further action as may be proper

EXECUTED this 20 day of July 2012

W. R. Miller
BY W R MILLER, General Partner
W R MILLER FAMILY PARTNERSHIP, LTD
885 19th Street
Beaumont, TX 77706

THE STATE OF Texas

COUNTY OF Galveston

BEFORE ME, the undersigned authority on this day personally appeared Petitioner W R MILLER to me to be the person whose name is subscribed to the above and foregoing instrument and acknowledged to me that he executed the same for the purposes and consideration therein expressed

WITNESSED MY HAND AND SEAL OF OFFICE this the 20th day of July, 2012

Linda C Richardson
Notary Public-State of Texas

LINDA C RICHARDSON
Notary Public, State of Texas
My Commission Expires
April 16, 2016

EXECUTED this 2nd day of August 2012

BY RANDALL BUTLER, President
Butler Asset Holdings, LLC
7610 Water Wood Trail
Kingwood, TX 77346

THE STATE OF Texas

COUNTY OF Harris

BEFORE ME, the undersigned authority on this day personally appeared Petitioner RANDALL BUTLER to me to be the person whose name is subscribed to the above and foregoing instrument and acknowledged to me that he executed the same for the purposes and consideration therein expressed

WITNESSED MY HAND AND SEAL OF OFFICE this the 2 day of Aug, 2012

Notary Public-State of Texas

MELISSA FAYE NEWMAN
Notary Public, State of Texas
My Commission Expires
December 22, 2014

APPROVED

BY MARK HENRY
County Judge

9/4/12
Date

ATTEST
DWIGHT SULLIVAN
County Clerk

12-0823 M&B Application Miller-Butler

COASTAL SURVEYING OF TEXAS, INC.
GALVESTON OFFICE
8017 HARBORSIDE DRIVE
P O BOX 877 (mailing)
GALVESTON, TX 77553
ph (409) 740-1517 fx (409) 740-0377
CRYSTAL BEACH OFFICE
975 LAZY LANE WEST
P O BOX 2742 (mailing)
CRYSTAL BEACH, TX 77650
ph (409) 684-6400 fx (409) 684-6112
WWW.SURVEYGALVESTON.COM

Exhibit "A"

TRACT 4-B, Block 2 - COPACABANA BY THE SEA

Being the combination of the West portion of Tract 5-A, in Block 2, a tract as approved by Galveston County Commissioners Court as recorded in County Clerk File Number 2010033108, Galveston County Deed Records, Galveston County, Texas, also Lot 4, and a Tract 4-A, a 0 31 acre tract, in Block 2, out of COPACABANA BY THE SEA, a subdivision in Galveston County, Texas, according to the map or plat thereof recorded in Plat Record 17, Map Number 70, Galveston County Plat Records, said Tract 4-B being more particularly described by metes and bounds as follows
BEGINNING at the Northwest corner of said Lot 4, Block 2,
THENCE North 67°12'30" East, along the South line of Carioca Court (60 foot row), a distance of 24 13 feet to a point a curve to the right,
THENCE with a curve turning to the right with an arc length of 32.18 feet, with a radius of 50 00 feet, with a chord bearing of N 85°38'36" E and a chord length of 31 62 feet to a point in a curve to the left,
THENCE a curve turning to the left with an arc length of 51 32 feet, with a radius of 50 00 feet, with a chord bearing of N 74°46'57" E and a chord length of 49 10 feet to a point,
THENCE crossing said Tract 5-A, South 41°03'38" East, a distance of 98.49 feet,
THENCE continuing across said Tract 5-A, South 22°47'39" East, a distance of 152.40 feet to the South line of said Tract 5-A and the North line of Copacabana Drive (60 foot row),
THENCE S 63°41'45" W, along the North line of said Copacabana Drive, a distance of 132 92 feet to the Southwest corner of said Tract 4-A,
THENCE N 22°47'30" W, along the West line of said Tract 4-A and Lot 4, Block 2, a distance of 270 60 feet to the POINT OF BEGINNING, having an area of 0 751 Acres

TRACT 6-B, Block 2 - COPACABANA BY THE SEA

Being the combination of the East portion of Tract 5-A, all of Tract 6-A, in Block 2, tracts as approved by Galveston County Commissioners Court as recorded in County Clerk File Number 2010033108, Galveston County Deed Records, Galveston County, Texas, out of COPACABANA BY THE SEA, a subdivision in Galveston County, Texas, according to the map or plat thereof recorded in Plat Record 17, Map Number 70, Galveston County Plat Records, said Tract 6-B being more particularly described by metes and bounds as follows.
BEGINNING at the Northeast corner of said Tract 6-A,
THENCE South 43°52'25" East, along the East line of said Tract 6-A, a distance of 280 52 feet,
THENCE South 59°45'06" West, along the South line of said Tract 6-A, a distance of 111 73 feet,
THENCE South 25°38'51" East, along the East line of said Tract 5-A, a distance of 50.60 feet to the South line of said Tract 5-A and the North line of Copacabana Drive (60 foot row),
THENCE South 63°41'45" West, along the South line of said Tract 5-A, a distance of 48 77 feet,
THENCE crossing said Tract 5-A, North 22°47'39" West, a distance of 152 40 feet,
THENCE continuing across said Tract 5-A, N 41°03'38" W, a distance of 98 49 feet to the South line of Carioca Court, a 50 foot row and Curve to the Left,
THENCE with a curve turning to the left with an arc length of 74.77 feet, with a radius of 50 00 feet, with a chord bearing of N 02°27'37" E and a chord length of 68 01 feet to the POINT OF BEGINNING, having an area of 0 759 Acres.

EXHIBIT 'B'

SCALE: 1" = 50'

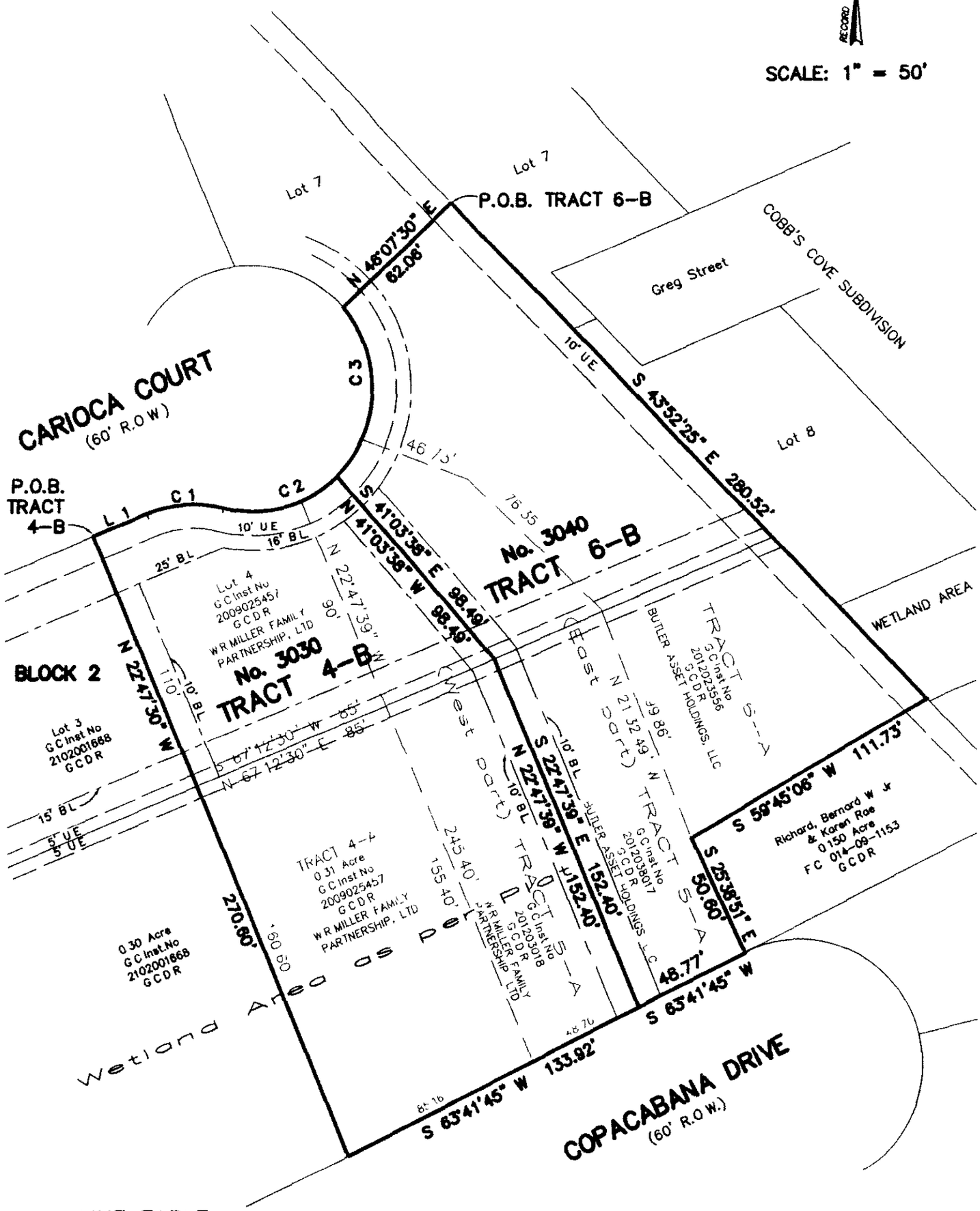

LINE TABLE

Line	Bearing	Distance
L 1	N67°12'30"E	24.13'

CURVE TABLE

Curve	Radius	Arc Length
C 1	50'	32.18'
C 2	50'	51.32'
C 3	50'	74.77'

LEGEND

B.L. Building Setback Line
U.E. Utility Easement

COASTAL SURVEYING OF TEXAS, INC.

GALVESTON OFFICE
8017 HARBORSIDE DRIVE
P.O. BOX 877 (mailing)

CRYSTAL BEACH OFFICE
975 LAZY LANE WEST
P.O. BOX 2742 (mailing)

AGENDA ITEM #27a

Galveston County
Legal Department

COUNTY COURTHOUSE
722 MOODY 5th FLOOR
GALVESTON, TEXAS 77550-2317

HARVEY BAZAMAN

Donald Glywasky
Barry C Willey
Myrna S Reingold

Galveston Line
(409) 770-5562

Houston Line
(281) 316-8300

Fax Line
(409) 770-5560

RECEIVED
AUG 22 2012
GALVESTON COUNTY JUDGE

August 21, 2012

Moody National Bank of Galveston
2302 Post Office Street
Galveston, Texas 77550
Attn Michael Christiansen
Executive Vice President

Certified Mail R R R

Re Notice of Termination of Agreement for LockBox Services

Dear Mr Christiansen

Please be advised that pursuant to Paragraph 15 of the LockBox Agreement dated effective October 1, 2011, Galveston County, via Commissioners' Court action of earlier today, desires to terminate this Agreement effective thirty (30) days from the date of this letter

We have enjoyed our banking relationship with Moody National Bank and hope to continue using your services for many years to come

Sincerely yours,

Harvey Bazaman

Harvey Bazaman
Galveston County Legal Dept

Cc Hon Mark A Henry
County Judge

Hon Cheryl E Johnson
Tax Assessor-Collector

AGENDA ITEM #28

COUNTY OF GALVESTON

Bonnie Hughes
Administrative Specialist
Phone 409-770-5230
FAX 409-621-7976

Office of Justice Administration
600 – 59th Street, Suite 4209
Galveston, Texas 77551

Karen Henderson
Indigent Defense Coordinator
Phone 409-766-2442

Bonita M. Quiroga
Director

RECEIVED
AUG 15 2012
GALVESTON COUNTY JUDGE

August 14, 2012

Honorable Mark Henry
County Judge
722 Moody
Galveston, Texas 77550

RE Westlaw NEXT subscriptions

Dear Judge Henry,

Please place the following items on the next available agenda for consideration by the Commissioner's Court

Consideration of subscription to Westlaw NEXT
- a) Law Library – Public Access
- b) District Attorney, Courts and County Staff
- c) Jail Library – Inmate Access

The proposed subscriptions replace our current subscriptions with West Although we have a one year option left on our current subscriptions, renewing our subscriptions this month offers the following benefits

1 Law Library – Public Access
- a Increase number of terminals available from 2 to 6
- b Although price increases from $917 72 per month to $3,469 93 per month, we are able to provide more material online and will be able to eliminate some print materials, as well as the maintenance agreement on those print materials, at an annual savings of more than $60,000
- c Eliminate the requirement to maintain certain print materials required under current online subscription

2 DA, Courts and County Staff
- a Increase number of users from 80 to 85
- b Reduce cost from $8,819 88 monthly to $7,168 15 monthly, a savings of $19,000 annually

c Increased access to publications/databases online means a reduction in print materials, as well as a reduction in costs associated with accessing online materials that were previously not a part of our subscription

d Eliminate the requirement to maintain certain print materials required under current online subscription

3 Jail Library – Inmate Access

a Increases number of terminals from 12 to 14

b Reduce cost from $5,506 32 monthly to $1,225 00 monthly, a savings of approximately $51,000 annually

The biggest savings comes from the ability to eliminate a large majority of our print materials while keeping the price down on our online services I recommend these subscriptions and ask that the Commissioner's Court approve all three subscriptions

Please do not hesitate to contact me should you have any questions

Sincerely,

Bonita M Quiroga
Director

cc Rufus Crowder, Purchasing Agent
Harvey, Bazaman, Legal Director

AGENDA ITEM #28a1

WESTLAW PROPOSAL
TEXAS SELECT

PROPOSAL FOR

Galveston County Law Library

Prepared by
Randall Lysdale
3213 Sunrise Dr
Dallas, TX 75088
(214) 402 4736
randy.lysdale@thomsonreuters.com

July 1, 2012

BETTER RESULTS FASTER

Westlaw.

Table of Contents

Summary of Modules

Texas Select Core

Texas Primary Law

Texas Select Modules

Texas Analytical
Texas Estate Planning
Texas Family Law
Texas Practice Guide
Texas Practice Series

National and Topical Modules

All Analytical
All Primary Law

Features and Services

Summary of Contents

Texas Select Core

Texas Primary Law

Texas Select combines caselaw, annotated statutes, Attorney General opinions, and other state materials for Texas as well as KeyCite®, into a single, integrated research tool West case synopses and headnotes summarize the facts, issues, procedural history, holdings and disposition of a decision – information that might otherwise be scattered throughout the opinion Annotated Statues include Statutory Credits, Historical and Statutory Notes, Cross-References, and Notes of Decisions that provide quick summaries of cases interpreting or applying the statute in question

Texas Select Modules

Texas Analytical

Analytical gives you a single, comprehensive integrated legal research tool This collection of state-specific information is a must

Texas Estate Planning

Estate Planning packages key estate planning content, and saves you time every step of the way

Texas Family Law

Get access to a wide range of current family law, analyze the law and evaluate legal strategy with West's respected secondary treatises and CLE materials

Texas Practice Guide

Practice Guide is the how-to guide to state-specific law

Texas Practice Series

Practice Series provides critical legal resource materials covering all available state forms, treatises and analytical materials Written by state experts, Practice Series is the preeminent analytical law series

National and Topical Modules

All Analytical

All Analytical combines expert legal analysis with forms, jury instructions and more This impressive collection of titles enables quick review of specific points in familiar areas of law and helps you cover unfamiliar ground with speed and ease

All Primary Law

All Primary Law compiles hundreds of state and federal law databases It contains coast-to-coast coverage of cases, statutes, attorney general opinions, administrative codes, and more

Westlaw.

Get unlimited access to the information you need.

Texas Primary Law provides essential resources at a fixed rate With unlimited access to your state's caselaw, statutes, administrative codes, AG Opinions, and law reviews and journals, you'll be able to find what you need with speed and ease

WESTLAW ADVANTAGES

There are three core advantages that separate Westlaw® from other research services

- **Comprehensive legal content**, including primary law, legal analysis, and litigation materials
- **Tools to help you find it faster**, such as editorial enhancements, industry-leading search and linking technologies, 24/7 research assistance, and more
- **Trusted accuracy** through case corrections and KeyCite®, the most complete, accurate, up-to-the-minute citation service

And with WestlawNext™ we built on these core advantages to make legal research easier and more intuitive than ever before

Editorial enhancements

West Key Number System

The West Key Number System® classifies American law into more than 400 topics – and 100,000 subtopics – relating to persons, property, contracts, torts, crimes, remedies, and government, accelerating your research by directing you to specific points of law

Case Synopses and Headnotes

West case synopses and headnotes summarize the facts, issues, procedural history, holdings and disposition of a decision – information that might otherwise be scattered throughout the opinion

Synopses and headnotes contain terms that may not have been used by the authoring judge, including terms of art and words that describe legally significant relationships among parties (e g , landlord and tenant, husband and wife)

Annotated statutes

- Statutory Credits show you citations to session laws from which a statute was derived
- Historical and Statutory Notes reveal the history of a statute that may be significant in its construction and application
- Cross-References/Library References lead you to relevant Key Numbers and to law reviews, treatises, and administrative code provisions
- Notes of Decisions provide quick summaries of cases interpreting or applying the statute in question

KeyCite citation research service

KeyCite is the easy-to-use, powerful citator that covers more than 4 million reported cases, 20 million headnotes, 1 million unpublished decisions, USCA®, statutes for all 50 states and CFR

This citator service verifies whether cases, statutes, administrative decisions and regulations remain good law In addition, KeyCite links to citing cases, administrative decisions, more than 700 law reviews and other analytical sources such as ALR®, Am Jur® and Wright & Miller*

See reverse side for content listings

* Linking may involve additional charges based on Westlaw plan inclusion Please check your plan for your specific charges

THOMSON REUTERS

Texas Primary Law

Westlaw content included

CASELAW
Texas Cases
Texas Headnotes (Digest)
Texas Business Organizations Cases
Texas Civil Rights Cases
Texas Commercial Law and Contracts Cases
Texas Criminal Justice Cases
Texas Education Cases
Texas Energy Cases
Texas Environmental Law Cases
Texas Estate Planning and Probate Cases
Texas Evidence Cases
Texas Family Law Cases
Texas Finance and Banking Cases
Texas Government Benefits Cases
Texas Government Contracts Cases
Texas Health Law Cases
Texas Insurance Cases
Texas Labor and Employment Cases
Texas Legal Ethics and Professional Responsibility Cases
Texas Pension and Retirement Benefits Cases
Texas Products Liability Cases
Texas Professional Malpractice Cases
Texas Public Utilities Reports
Texas Real Property Cases
Texas Securities and Blue Sky Law Cases
Texas Tax Regulations
Texas Taxation Cases
Texas Tort Law Cases
Texas Workers Compensation Cases

LEGISLATIVE SERVICE
Texas Legislative Service
Texas Historical Legislative Service

STATUTES AND COURT RULES
Texas Statutes 2006 – Annotated
Texas Statutes 2005 – Annotated
Texas Statutes 2004 – Annotated
Texas Statutes 2003 – Annotated
Texas Statutes 2002 – Annotated
Texas Statutes 2001 – Annotated
Texas Statutes 2000 – Annotated
Texas Statutes 1999 – Annotated
Texas Statutes 1998 – Annotated
Texas Statutes 1997 – Annotated
Texas Statutes 1996 – Annotated
Texas Statutes 1995 – Annotated
Texas Statutes 1994 – Annotated
Texas Statutes 1993 – Annotated
Texas Statutes 1992 – Annotated
Texas Statutes 1991 – Annotated
Texas Statutes 1990 – Annotated
Texas Statutes 1988 – Annotated
Texas Statutes 1987 – Annotated
Texas Statutes Unannotated
Texas Statutes Annotated
Texas Statutes General Index
Texas Environmental, Health & Safety Statutes
Texas Blue Sky Statutes
Texas Criminal Justice Statutes
Criminal Justice – Texas Court Rules
Texas Family Law Statutes
Texas Taxation Statutes
Texas Workers Compensation Statutes
Texas Court Rules
Texas Trial Court Rules
Texas Court Orders

TEXAS ADMINISTRATIVE SERVICE
Texas Administrative Code
Texas Blue Sky Combined
Texas Blue Sky Regulations
Texas Administrative Code Index
Texas Register
Texas Attorney General Opinions
Texas Environmental Law Administrative Decisions
Texas Environmental Law Cases & Administrative Decisions
Texas Ethics Commission Advisory Opinions
Texas Legal Ethics & Professional Responsibility – Ethics Opinions
Texas Securities Administrative Decisions
Texas Tax Regulations
Texas Taxation Administrative Decisions
Texas Taxation Cases and Administrative Materials
Texas Workers Compensation Cases and Administrative Decisions
Texas Workers Compensation Administrative Code
Texas Workers' Compensation Administrative Decisions

INSURANCE MATERIALS
Texas Insurance Cases
Texas Insurance Statutes
Texas Insurance Statutes – Core Title
Texas Insurance Statutes – Related Titles
Texas Insurance Administrative Code
Westlaw Insurance – Texas Administrative Code – Core Title
Westlaw Insurance – Texas Administrative Code – Related Regulations
Texas Insurance Bulletins
Texas Insurance Statutes Regulations and Bulletins

SPECIALIZED DATABASES
Sales and Use Tax Licenses – Texas
Texas Corporate Records & Business Registrations
Westlaw State Bulletins – Texas
West Legal Directory – Texas

JOURNALS AND LAW REVIEWS
Texas Journals and Law Reviews
American Journal of Criminal Law
Baylor Law Review
Currents International Trade Law Journal
Houston Business and Tax Law Journal
Houston Journal of Health Law & Policy
Houston Journal of International Law
Houston Law Review
Houston Lawyer
Journal of Air Law and Commerce
Journal of Forensic Document Examination
The Review of Litigation
SMU Law Review
Scholar St Mary's Law Review on Minority Issues
South Texas Law Review
St Mary s Law Journal
Texas Bar Journal
Texas Journal on Civil Liberties & Civil Rights
Texas Hispanic Journal of Law and Policy
Texas Intellectual Property Law Journal
Texas International Law Journal
Texas Journal of Business Law
Texas Journal of Women and the Law
Texas Law Review
Texas Review of Entertainment & Sports Law
Texas Review of Law and Politics
Texas Tech Law Review
Texas Tech Administrative Law Journal
Texas Wesleyan Law Review
Thurgood Marshall Law Review

Some exclusions apply Additionally, certain content may be accessible only on Westlaw Content subject to change Contact your West Representative for plan details

Visit west.thomson.com/westlaw

To order or for more information, contact your West Representative at 1-800-762-5272.

THOMSON REUTERS

© 2010 Thomson Reuters L 326527/2 10

WESTLAW
SELECT

Texas Analytical

TEXAS

Texas Analytical presents a comprehensive collection of critical legal resource materials including Texas Jurisprudence 3d, Texas Forms Legal and Business, and Texas Jurisprudence *Pleading and Practice Forms 2d*

Texas Jurisprudence 3d

Covers the entire body of Texas law with *in-depth analysis of on-point cases*, statutes, administrative rules and regulations, and constitutional provisions

- An incisive analytical statement of Texas *civil and criminal law – substantive and* procedural – based on state statutes and state and federal case law
- Cites to American Jurisprudence 2d, *American Law Reports*, American Jurisprudence Trials, American Jurisprudence Proof of Facts articles, and more
- *Federal Aspects* alerts you to any federal implications, and Treated Elsewhere statements list major exclusions that, while related, are treated in another Texas Jur 3d article

Texas Forms: Legal and Business

Fingertip access to more than 6,500 court-tested forms for real property, consumer protection, leases, contracts, personal property, business enterprise assignments, estate planning, associations and nonprofit organizations, family and commercial code

A host of drafting aids include tax opportunities and pitfalls so you can take into account both Texas and federal tax aspects

Texas Jurisprudence Forms: Pleading and Practice

Comprehensive collection of more than 7,000 litigation-oriented practice forms based on *Texas statutes, rules and caselaw for virtually* all judicial and administrative proceedings

- Designed for courtroom use, integrating legal and form-drafting principles with *coverage of Texas state and federal statutes*, cases, regulations and Rules of Court
- Procedural Guide on filing periods, statutes of limitation, notice requirements and *required parties*
- Collateral Practice References to Texas Jur 3d, Am Jur® Proof of Facts, ALR® and law review articles

Continue to enjoy the many benefits of using Westlaw

West Key Number System

The West Key Number System® classifies American law into more than 400 topics – and 100,000 subtopics – accelerating your research by directing you to specific points of law

Case synopses and headnotes

West case synopses and headnotes put the facts, issues, procedural history, holdings and *disposition of a decision in close proximity*, aiding your word searching They also contain terms that may not have been used by the authoring judge, so you can retrieve relevant cases that an opinion-only search might miss

Plain-English searching

Enter a description of your issue in standard English Westlaw displays the documents that most closely match your concepts

Key Number searching

West attorney-editors assign a Key Number to every point of law based upon the concepts discussed within the case Using this Key Number information in searches substitutes highly precise terminology for often ambiguous language And finding just one case on-point leads directly to others – in any jurisdiction

KeyCite citation research service

KeyCite® is the easy-to-use, powerful citator that includes citations to more than 4 million reported cases, 20 million headnotes, and 1 million unpublished decisions Plus, citations to USCA®, CFR, statutes for all 50 states, 600 law reviews, ALR, Am Jur, Wright & Miller, administrative materials, jurisprudence and other sources *

* Linking may involve additional charges based on Westlaw plan inclusion Please check your plan for your specific charges

Westlaw.

Texas Analytical

Selected content blocks and databases.

SELECTED CONTENT: TEXAS JURISPRUDENCE 3D

Administrative Law
Affidavits
Appellate Review
Arbitration and Award
Assault and Battery
Attorney General
Attorneys at Law
Automobiles
Banks
Business and Occupation Licenses
Civil and Military Defense
Civil Rights
Commercial Code
Compromise and Settlement
Constitutional Law
Contempt
Continuance
Contracts
Costs
Courts
Criminal Law
Damages
Deeds
Delinquent Children
Discovery and Depositions
Enforcement of Judgments
Estates
Evidence
Family Law
Frauds Statute of
Government Tort Liability
Injunctions
International Law
Judges
Judgments
Judicial Council
Jury
Liens
Notice
Pleading
Premises Liability
Process Notices and Subpoenas
Products Liability
Release
Statutes
Stipulations
Summary Judgment
Tort Liability
Trial
Trusts
Venue
Wills

TEXAS FORMS. LEGAL AND BUSINESS ASSIGNMENTS

Notice
Rights and Interest

BUSINESS ENTERPRISES

Business Corporations
Buy-Sell Agreements
Buying and Selling a Business
Joint Ventures
Partnerships
Professional Associations and Corporations

COMMERCIAL CODE

Bank Deposits and Collections
Documents of Title
Fund Transfers
Investment Securities
Secured Transactions

CONSUMER PROTECTION

Consumer Warranties
Credit Reporting

CONTRACTS

Compromises, Settlements and Releases
Employment
Indemnity
Independent Contractors
Powers of Attorney
Rescission and Modification

ESTATE PLANNING

Trusts
Wills

FAMILY LAW

Husband and Wife
Minors
Unmarried Cohabitants

LEASES

Personal Property
Real Property

NONPROFIT ASSOCIATIONS AND CORPORATIONS

Social, Recreational and other Charities and Foundations

PERSONAL PROPERTY

Liens
Lost and Unclaimed Property

REAL PROPERTY

Condominiums and Timeshares
Conveyances
Easements, Licenses and Profits
Environmental Law
Liens
Options
Sales
Security Transactions

TEXAS JURISPRUDENCE PLEADING AND PRACTICE FORMS 2D

Abandoned, Lost and Unclaimed Property
Adoption
Affidavits Oaths and Affirmations
Appeal and Error – Civil & Criminal Cases
Assault and Other Intentional Torts
Building and Construction Contracts
Building and Savings and Loan Association
Collection and Credit Agencies
Conservation and Pollution Laws
Constitutional Law
Counterclaim Setoff and Cross-Claim
Courts
Criminal Procedure
Damages
Death
Depositions and Discovery
Dismissal Discontinuance, Nonsuit
Drugs, Narcotics and Poisons
Evidence and Witnesses
False and Wrongful Imprisonment
Fires
Government Tort Liability
Guaranty
Habeas Corpus
Health Care Facilities
Incompetent Persons
Indemnity
Injunctions
Intoxicating Beverages
Judgments
Labor and Labor Relations
Lis Pendens
Malicious Prosecution
Motions, Notices and Orders
Negligence
New Trial
Partnership
Pensions and Retirement Funds
Personal Injury Allegations
Premises Liability
Products Liability
Statute of Limitations
Taxpayer and Taxpayers Actions
Trial
Venue
Workers Compensation

Visit west.thomson.com/westlaw/select

THOMSON REUTERS

To order or for more information, contact your West Representative at 1-800-762-5272.

Westlaw.

© 2008 Thomson Reuters L 315424/11-08

Westlaw.

In step with your practice.

We have a targeted solution for estate planning needs It's no surprise We designed Texas Estate Planning around what you told us you needed – your workflow, your tasks, your need for strategic information

The result is a practitioner-built resource that packages key estate planning content, makes it easy to access, and saves you time, every step of the way

WESTLAW ADVANTAGES

There are three core advantages that separate Westlaw® from other research services

- **Comprehensive legal content**, including primary law, legal analysis, and litigation materials
- **Tools to help you find it faster**, such as editorial enhancements, industry-leading search and linking technologies, 24/7 research assistance, and more
- **Trusted accuracy** through case corrections and KeyCite®, the most complete, accurate, up-to-the-minute citation service

And with WestlawNext™, we built on these core advantages to make legal research easier and more intuitive than ever before

Texas Estate Planning includes:

Forms and Checklists

Easily search a comprehensive collection of state-specific and general forms and checklists that will prove indispensable when drafting estate planning and probate forms

Analytical Materials

Analyze the law to determine favorable estate planning strategies through guidance from the leading authors on state-specific and national estate planning and probate law

Stock Quote Service

Get historical stock quotes to determine the value of assets

Tables and Rates

Access current income tax rates and the current rates for estate and gift, excise and Social Security taxes

Save time and effort with these tried and true research tools:

West Key Number System

The West Key Number System® classifies American law into more than 400 topics – and more than 100,000 subtopics – accelerating your research by directing you to specific points of law

Case synopses and headnotes

West case synopses and headnotes put the facts, issues, procedural history, holdings and disposition of a decision in close proximity, aiding your word search They also contain terms that may not have been used by the authoring judge, so you can retrieve relevant cases that an opinion-only search might miss

KeyCite citation research service

KeyCite is the easy-to-use, powerful citator that includes citations to more than 4 million reported cases, 20 million headnotes, and 1 million unpublished decisions Plus, citations to USCA®, CFR, statutes for all 50 states, 600 law reviews, ALR®, Am Jur®, Wright & Miller, administrative materials, jurisprudence, and other sources

See reverse side for content listings

THOMSON REUTERS

Texas Estate Planning

Westlaw content included

ESTATE PLANNING FORMS

All State and General Estate Planning and Probate Forms and Checklists
Texas and General Estate Planning and Probate Forms and Checklists

TEXAS ANALYTICAL MATERIALS

Texas Estate Planning & Probate Texts
Texas Forms Legal and Business – Estate Planning & Probate
Stevenson s Texas Legal Practice Forms – Estate Planning & Probate
Texas Jurisprudence Pleading and Practice Forms – Estate Planning & Probate
Texas Practice Series – Estate Planning & Probate
National Business Institute CLE Texas Estate Planning and Probate

NATIONAL ANALYTICAL MATERIALS

Estate Planning Law Reviews, Texts and Bar Journals Combined
Estate Planning Treatises Combined
PLI Estate Planning Materials Combined
Advising the Elderly Client
American Jurisprudence 2d Estate Planning & Probate
American Jurisprudence Legal Forms 2d Estate Planning & Probate
American Law Reports Estate Planning & Probate
Asset Protection Domestic and International Law and Tactics
Bogert Trusts and Trustees
Durable Powers of Attorney & Health Care Directives
Estate Planning and Chapter 14
Understanding the Special Valuation Rules
Estate Planning for Farmers and Ranchers
Family Estate Planning Guide
Handling Federal Estate and Gift Taxes 6th
International Income Tax and Estate Planning
International Tax and Estate Planning A Practical Guide for Multinational Investors
Irrevocable Trusts 3d
Koren Estate and Personal Financial Planning
Manning on Estate Planning
McGaffey Legal Forms with Tax Analysis Estate Planning & Probate
Mertens Law of Federal Income Taxation
Mertens Law of Federal Income Taxation Estates and Trusts
Nichols Legal Forms Estate Planning & Probate
Planning an Estate A Guidebook of Principles and Techniques
Restatement of the Law Trusts
Restatement of the Law Trusts Archive
Revocable Trusts 5th
Stocker and Rikoon on Drawing Wills and Trusts
West s Legal Forms Estate Planning & Probate
Will Contests 2d
Wills

CURRENT AWARENESS

Koren Estate and Personal Financial Planning Monthly Update Newsletter

HISTORICAL STOCK QUOTES

IRS TABLES, RATES & PUBLICATIONS

Applicable Federal Rates
Charity Lookup *IRS Pub 78*
IRS Valuation Tables
Tax Rates

Some exclusions apply Additionally, certain content may be accessible only on Westlaw Content subject to change Contact your West Representative for plan details

Visit west.thomson.com/westlaw/practitioner

To order or for more information, contact your West Representative at 1-800-762-5272.

THOMSON REUTERS

© 2010 Thomson Reuters L 319301/2 10

WESTLAW PRACTITIONER	Texas Family Law
	TEXAS

Westlaw.

In step with your practice.

We have a targeted solution for your specific type of family law practice It's no surprise We designed Texas Family Law around what you told us you needed Your workflow, your tasks, your need for strategic information

The result is a practitioner-built resource that packages key family law content, makes it easy to access, and saves you time, every step of the way

WESTLAW ADVANTAGES

There are three core advantages that separate Westlaw® from other research services

- **Comprehensive legal content**, including primary law, legal analysis, and litigation materials
- **Tools to help you find it faster**, such as editorial enhancements, industry-leading search and linking technologies, 24/7 research assistance, and more
- **Trusted accuracy** through case corrections and KeyCite®, the most complete, accurate, up-to-the-minute citation service

And with WestlawNext®, we built on these core advantages to make legal research easier and more intuitive than ever before

Texas Family Law includes:

Forms and Practice Materials

Get access to a wide range of current family law forms, analyze the law and evaluate legal strategy with West's respected secondary treatises and CLE materials

Save time and effort with these tried and true research tools:

West Key Number System

The West Key Number System® classifies American law into more than 400 topics – and more than 100,000 subtopics – accelerating your research by directing you to specific points of law

Case synopses and headnotes

West case synopses and headnotes put the facts, issues, procedural history, holdings and disposition of a decision in close proximity, aiding your word search They also contain terms that may not have been used by the authoring judge, so you can retrieve relevant cases that an opinion-only search might miss

KeyCite citation research service

KeyCite is the easy-to-use, powerful citator that includes citations to more than 4 million reported cases, 20 million headnotes, and 1 million unpublished decisions Plus, citations to USCA®, CFR, statutes for all 50 states, 600 law reviews, ALR®, Am Jur®, Wright & Miller, administrative materials, jurisprudence, and other sources

See reverse side for content listings

THOMSON REUTERS

Texas Family Law

Westlaw content included

FAMILY LAW FORMS AND PRACTICE MATERIALS

NBI Family Law CLE Materials – Texas
Sampson & Tindall s Texas Family Code Annotated
Stevenson s Texas Legal Practice Forms Family
Texas Family Law Forms
Texas Family Law Service
Texas Forms Family
Texas Jurisprudence Family Law Sections
Texas Practice Guide – Family Law
All States Family Law Forms
American Law Reports – Family Law
Bankruptcy and Domestic Relations Manual
Child Custody Practice & Procedure
Children and the Law Rights & Obligations
Determining Child & Spousal Support
Equitable Distribution of Property
Legal Rights of Children
Qualified Domestic Relations Orders
Valuation of Divorce Assets, Rev Ed

Some exclusions apply Additionally certain content may be accessible only on Westlaw Content subject to change Contact your West Representative for plan details

Visit west thomson com/westlaw/practitioner

To order or for more information, contact your West Representative at 1-800-762-5272.

THOMSON REUTERS

© 2010 Thomson Reuters L 315432/2 10

Westlaw.

The how-to guide to Texas law, authored by and for Texas practitioners.

The Texas Practice Guide's coverage of essential Texas practice areas is a springboard into virtually any area of Texas law with direct links to Texas Jurisprudence 3d, West's® Texas Digest, Vernon's® Texas Statutes and Codes Annotated™ and South Western Reporter® 2d – West's entire Texas library*

WESTLAW ADVANTAGES

There are three core advantages that separate Westlaw* from other research services

- **Comprehensive legal content**, including primary law, legal analysis, and litigation materials
- **Tools to help you find it faster**, such as editorial enhancements, industry-leading search and linking technologies, 24/7 research assistance, and more
- **Trusted accuracy** through case corrections and KeyCite®, the most complete, accurate, up-to-the-minute citation service

And with WestlawNext™, we built on these core advantages to make legal research easier and more intuitive than ever before

Trust the Texas Practice Guide for current, on-point coverage

The Texas Practice Guide was developed in response to the requests of attorneys like you And it was designed by experienced Texas attorneys with years of practice in the fields they've written about

The Texas Practice Guide cites only the leading and most recent caselaw On-point cites and analysis from several attorneys' viewpoints give you a better understanding of all relevant issues involved

Timesaving tools

The Texas Practice Guide incorporates timesaving features including

- **Scope Notes** that provide a summary description of each chapter's contents
- **Practice Tips** that are nested with related text to highlight the practical guidance they provide
- **Examples** to show you how to apply the law *and rules to actual case scenarios*
- **Checklists** that make sure every contingency is planned for
- **Forms** that aid in drafting and provide *valuable, practice-oriented resources*
- **Downloadable Files** that allow you to edit and print forms from your computer

Fully integrated research

With the Texas Practice Guide, you can jump instantly to case synopses, headnotes, Key Numbers, and annotated statutes This fully integrated research tool also includes extensive library cross-referencing and links to forms, digest topics, caselaw, codes, statutes and *other analytical products within the set, as* well as other Texas and national analytical texts, including ALR® and Am Jur® 2d

Continue to enjoy the many benefits of using Westlaw

West Key Number System

The West Key Number System® classifies American law into more than 400 topics – and more than 100,000 subtopics – accelerating your research by directing you to specific points of law

Case synopses and headnotes

West case synopses and headnotes put the facts, issues, procedural history, holdings, and disposition of a decision in close proximity, aiding your word search They also contain terms that may not have been used by the authoring judge, so you can retrieve relevant cases that an opinion-only search might miss

KeyCite citation research service

KeyCite is the easy-to-use, powerful citator that includes citations to more than 4 million reported cases, 20 million headnotes, and 1 million unpublished decisions Plus, citations to USCA®, CFR, statutes for all 50 states, 600 law reviews, ALR®, Am Jur®, Wright & Miller, administrative materials, jurisprudence, and other sources

See reverse side for content listings

* Linking may involve additional charges based on Westlaw plan inclusion Please check your plan for your specific charges

THOMSON REUTERS

Texas Practice Guide

Westlaw content included

Texas Practice Guide

Alternative Dispute Resolution
Business and Commercial Litigation
Business Entities
Business Transactions
Civil Appeals
Civil Pretrial
Civil Trial
Creditors Rights
Criminal Practice and Procedure
Discovery
Employment Practice
Evidence
Family Law
Financial Transactions
Insurance Litigation
Personal Injury 2d
Probate
Real Estate Litigation
Real Estate Transactions
Torts
Wills Trusts, and Estate Planning

Some exclusions apply Additionally, certain content may be accessible only on Westlaw Content subject *to change Contact your West Representative for* plan details

Visit west.thomson.com/westlaw

To order or for more information, contact your West Representative at 1-800-762-5272.

THOMSON REUTERS

© 2010 Thomson Reuters L 315426/2 10

Westlaw.

Quick research and easy access to cited cases, Texas statutes and much more.

Texas Practice Series is an extensive collection of comprehensive titles This powerful collection gathers the insights of many of Texas's most knowledgeable attorneys, judges, and legal scholars

WESTLAW ADVANTAGES

There are three core advantages that separate Westlaw® from other research services

- **Comprehensive legal content**, including primary law, legal analysis, and litigation materials
- **Tools to help you find it faster**, such as editorial enhancements, industry-leading search and linking technologies, 24/7 research assistance, and more
- **Trusted accuracy** through case corrections and KeyCite®, the most complete, accurate, up-to-the-minute citation service

And with WestlawNext,™ we built on these core advantages to make legal research easier and more intuitive than ever before

Provide sound counsel, even in unfamiliar areas of law

The speed and power of Westlaw helps you quickly pinpoint what well-known Texas legal experts have to say on any issue If you're researching in an unfamiliar area, you can quickly zero-in on

- Steps to take and checklists to follow
- Analysis of relevant decisions
- Texas statutes, rules and regulations
- Apparent discrepancies
- What you can learn from history
- What you can expect in the future

More ways to speed up your research

In addition to making your research more efficient with fast electronic searching you can also save time by

- Cutting and pasting analyses into briefs
- Jumping through hypertext links to cited Texas decisions – reported and unreported – Texas statutes, Texas administrative codes, federal cites including USCA®, CFR, the Supreme Court Reporter ', Federal Supplement® and more

Areas of Coverage

Research in familiar areas with speed and ease, or expand your practice with information and insight that covers the full scope of legal practice, including

- Business organizations
- County, special district and municipal law
- Consumer law
- Criminal practice
- Environmental law
- Evidence
- Family law
- Medical malpractice
- Methods of practice
- Real property
- Taxation
- Wills and Probate
- Workers' compensation

THOMSON REUTERS

Texas Practice Series

TEXAS

Westlaw content included

Texas Practice Series
Texas Practice Series Handbook on Texas Evidence
Texas Practice Series Rules of Evidence
Texas Practice Series County and Special District Law
Texas Practice Series Real Property
Texas Practice Series The Jury Charge for Texas Civil Litigation

Some exclusions apply Additionally, certain content may be accessible only on Westlaw Content subject to change Contact your West Representative for plan details

Visit west thomson.com/westlaw

To order or for more information, contact your West Representative at 1-800-762-5272.

THOMSON REUTERS

© 2010 Thomson Reuters L 315435/2 10

Westlaw.

Combines expert legal analysis with forms, jury instructions, and more.

This impressive collection of titles enables quick review of specific points in familiar areas of law and helps you cover unfamiliar ground with speed and ease

WESTLAW ADVANTAGES

There are three core advantages that separate Westlaw® from other research services

- **Comprehensive legal content**, including primary law, legal analysis, and litigation materials
- **Tools to help you find it faster**, such as editorial enhancements, industry-leading search and linking technologies, 24/7 research assistance, and more
- **Trusted accuracy** through case corrections and KeyCite®, the most complete, accurate, up-to-the-minute citation service

And with WestlawNext™, we built on these core advantages to make legal research easier and more intuitive than ever before

American Law Reports (ALR®)

A superior collection of annotations that evaluates all caselaw relevant to a specific point of law Examines both sides of an issue, to help you anticipate your opponent's arguments

American Jurisprudence 2d (Am Jur®)

Encyclopedic coverage of more than 400 topics Helps you gain a quick understanding of unfamiliar areas of law, so you can propose a sound course of action

Restatement of the Law

A chronological perspective of your specific points of law, accepted in many courts as persuasive authority Explains the current status of the law, and where it is likely to go in the future

Am Jur Pleading & Practice Forms Annotated

More than 36,500 forms covering every stage of state and federal litigation

Am Jur Proof of Facts

Winning case foundations and presentations with articles by experts well known in their fields add authoritative and decisive insights to the premise of your case

American Jurisprudence Trials

Articles showcasing successful strategies in actual cases Model Trial Articles covers the spectrum of personal injury, business, and criminal litigation

Causes of Action

Articles on virtually every type of civil action, with legal analysis to assess whether your case or defense will hold up in court

Wright & Miller Federal Practice and Procedure®

The definitive treatise on practicing law in the federal courts

West's® Federal Forms

Litigation-tested federal procedural forms, with accompanying commentary for use in civil and criminal litigation

Federal Procedure

A topically driven practice guide to federal, civil, criminal, and administrative procedure

Federal Procedural Forms

A compilation of practice-tested, up-to-date federal forms to accompany the Federal Procedure treatise

Handbook of Federal Evidence

Follows the Federal Rules of Evidence, and includes the full text of each rule and its legislative and committee history

Federal Jury Practice and Instructions

Background information, commentary, model/pattern instructions, and citations

Law Reviews and Journals

A collection of more than 600 of the most respected law reviews and bar journals

See reverse side for content listings

THOMSON REUTERS

All Analytical

Westlaw content included

AMERICAN LAW REPORTS

ALR 2d
State and Federal issues from 1948 to 1965
ALR 3d
State issues from 1965 to 1980
Federal issues from 1965 to 1969
ALR 4th
State issues from 1980 to 1991
ALR 5th
State issues from 1992 to 2004
ALR 6th
State issues from 2005 to present
ALR Federal
Federal issues beginning with 1969

AM JUR 2D

Contains more than 400 articles covering every topic of federal and state law pertinent to legal practice Topics are arranged alphabetically

AM JUR PLEADING & PRACTICE FORMS ANNOTATED

More than 6,500 forms covering
Notices
Complaints
Petitions
Declarations
Summonses
Motions
Replies
Answers
Counterclaims
Cross complaints
Discovery forms
Affidavits
Stipulations
Subpoenas
Orders
Writs
Jury instructions
Findings of fact
Judgments
Bonds
Decrees
And more

AM JUR PROOF OF FACTS

Personal injury/tort litigation
Medical/hospital malpractice claims
Products liability claims
Attorney/other professional malpractice claims
Insurance coverage/bad faith litigation
Real estate litigation
Business torts
Commercial litigation
Trademark/copyright litigation

Each Proof of Facts article provides
Elements of proof checklists
Elements of damages checklists
Model discovery
Sample proofs
Legal background
Practice and evidentiary considerations
Technical background
Defense considerations
Artwork and illustrations
Bibliography

AM JUR TRIALS

Railroad accidents
Drunk driving defense – breath scores
Traumatic infant brain injuries
Wrongful death in police custody
Failure to properly diagnose/treat cancer
Daubert challenges to scientific evidence
Sexual harassment
Lender liability
Each article provides advice on
Interviewing clients
Managing a heavy caseload and staff assignments
Locating medical, scientific, and technical experts
Conducting more effective direct and cross-examination
Composing opening statements and closing arguments

RESTATEMENT OF THE LAW

Agency
Conflict of laws
Contracts
Foreign relations law
Judgments
Property
Restitution
Suretyship and guaranty
Torts
Trusts
Unfair Competition

WRIGHT & MILLER FEDERAL PRACTICE AND PROCEDURE

The text fully analyzes
The Federal Rules Civil, Criminal, Appellate Evidence, and Supreme Court
Judicial procedure – related statutes
Jurisdiction, venue, removal, and ancillary matters
Controlling federal judicial constructions

WEST'S FEDERAL FORMS

Provides federal procedural forms, with accompanying commentary, for use in handling civil and criminal cases in the various federal courts Forms are arranged according to type of proceeding and the court to which they pertain

FEDERAL PROCEDURE

Covers all levels of federal practice and procedure, including
Article III courts
Specialized courts
Administrative agencies

FEDERAL PROCEDURAL FORMS

Pleading forms for motions complaints, orders, answers, cross-claims, interrogatories, and more
Expert guidance
References to USCA® CFR, and federal caselaw

CAUSES OF ACTION

Articles
Cross-references
Related or alternative causes of action
Practice and procedure
Damages awards surveys
Practice checklists
Sample cases
Sample pleadings
Research guides
Practice guides
Tables of cases

HANDBOOK OF FEDERAL EVIDENCE

Full text of Rules of Evidence
Legislative history and committee notes
Author analysis of federal decisions

FEDERAL JURY PRACTICE AND INSTRUCTIONS

Federal Jury Practice
General Instructions for Federal Criminal Cases
Instructions for Particular Federal Criminal Cases
General Instructions for Federal Civil Cases
Instructions for Civil Diversity Cases
Instructions for Civil Actions Governed by Federal Law

LAW REVIEWS AND JOURNALS

Provides powerful, professional insight from more than 600 of the most respected law reviews and bar journals

Some exclusions apply Additionally, certain content may be accessible only on Westlaw Content subject to change Contact your West Representative for plan details

Visit west.thomson com/westlaw

To order or for more information, contact your West Representative at 1-800-762-5272.

THOMSON REUTERS

© 2011 Thomson Reuters L 329672/3 11

Westlaw.

Find federal and state law in seconds, whenever you need it.

All Primary Law compiles hundreds of resources into a convenient package and lets you search as broadly or narrowly as you like

WESTLAW ADVANTAGES

There are three core advantages that separate Westlaw™ from other research services

- **Comprehensive legal content**, including primary law, legal analysis, and litigation materials
- **Tools to help you find it faster**, such as editorial enhancements, industry-leading search and linking technologies, 24/7 research assistance, and more
- **Trusted accuracy** through case corrections and KeyCite®, the most complete, accurate, up-to-the-minute citation service

And with WestlawNext™, we built on these core advantages to make legal research easier and more intuitive than ever before

A wider, clearer view of the law

Oftentimes, the answers you need are outside your home jurisdiction, or perhaps you simply want to broaden your legal horizon and follow developments elsewhere in the United States

All Primary Law brings distant jurisdictions to *you, and helps you locate the law you need to* get your job done

Coast-to-coast state coverage

The 50-state coverage includes

- Cases from state courts and federal courts within the state, with court rules and orders
- Annotated and unannotated statutes
- Attorney general opinions
- Administrative codes, registers, bulletins and other materials
- Municipal codes and charters (selected cities)

And numerous federal law resources

- Cases from the U S Supreme Court, courts of appeals, district courts and specialty courts
- United States Code Annotated®, unannotated statutes and uniform laws
- U S Code Congressional and Administrative News®
- Code of Federal Regulations
- Administrative decisions, bulletins and other materials
- Congressional testimony and political transcripts
- District of Columbia and U S territorial law

All the Westlaw advantages

All Primary Law makes your research easier, more accurate and more efficient Included with the state and federal law databases are tools such as

- KeyCite and KeyCite Alert – quick, up-to-date citation checking so you can be assured that your statute or case is still good law
- Streamlined statutory research – link immediately to expert analysis, practice guidance and forms
- *West Key Number System® – the consistent,* precise way to search across jurisdictional lines
- West's editorial enhancements – headnotes and case synopses, legislative history, references, tables, indexes and other timesaving information

See reverse side for content listings

All Primary Law

Westlaw content included

KEYCITE
For state and federal cases and statutes, Code of Federal Regulations and more

STATE CASELAW
State Cases
State and Federal Cases
State Headnotes
State Court Orders
State Court Rules

STATE STATUTES
State Statutes – Unannotated
State Statutes – Annotated
State Statutes – Annotated (annual)
State Statutes – General Index
State Statutes (topical)

STATE ADMINISTRATIVE MATERIALS
State Administrative Code Multibase
State Administrative Code
State Administrative Code – Index (selected states)
State Administrative Code (topical)
Attorney General Opinion Multibase
State Attorney General Opinions
State Administrative Registers (selected states)
State Bulletins (selected states)
Municipal Codes and Charters (selected cities)

FEDERAL CASELAW
U S Supreme Court Cases
U S Supreme Court Cases (before 1945)
U S Supreme Court Headnotes
U S Courts of Appeal Cases
U S Courts of Appeal Cases (before 1945)
U S Courts of Appeals Headnotes
U S Court of Appeal Cases (circuit)
U S District Courts Cases
U S District Courts Cases (before 1945)
U S District Courts Headnotes
U S District Courts Cases (circuit)
U S District Courts Unreported Cases
U S Specialty Courts Cases
U S Cases (topical)
Federal Orders
Federal Rules

FEDERAL STATUTES
Unites States Code
Unites States Code Annotated
Unites States Code Annotated – General Index
Unites States Code Annotated – Tables
Unites States Code Annotated (annual)
U S Code Congressional and Administrative News
U S Public Laws
U S Political Transcripts
U S Congressional Testimony
Uniform Laws Annotated
ULA Model Penal Code
Statutes (topical)
Statutes (individual)

FEDERAL ADMINISTRATIVE MATERIALS
Code of Federal Regulations
Code of Federal Regulations (annual)
Federal Acquisition Regulations
Administrative Decisions (topical)
Administrative Bulletins, Manuals and Other Materials (topical)
District of Columbia and Territorial Law
Westlaw Bulletin

Some exclusions apply Additionally, certain content may be accessible only on Westlaw Content subject to change Contact your West Representative for plan details

Visit west.thomson.com/westlaw

To order or for more information, contact your West Representative at 1-800-762-5272.

THOMSON REUTERS

© 2010 Thomson Reuters L 326561/2 10

WestlawNext™

Taking Westlaw's core advantages to the next level.

An intuitive design and intelligent tools help you work smarter and faster, *plus* research that knows where you want to go

WestlawNext Advantages

WestlawNext™ builds on Westlaw's strengths to bring you the next evolution of legal research Now searches are even more intuitive and efficient, results are even more inclusive and relevant So you'll have confidence like never before that a simple word search delivers the documents you need

- **Dramatically improved search** with WestSearch™, the world's most advanced legal search engine A query of simple descriptive terms searches all Westlaw® content – no need to pick a database or use precise search terms – and displays the most relevant results first You can *narrow results by document type,* jurisdiction, date, and other criteria
- **Easier to use**, *thanks to a clean, intuitive* design with a customizable display and *quick-read visual indicators that help you* track your research
- **Organize more efficiently** *by dragging and* dropping documents into research folders, *highlighting text, adding research notes,* and more

The Next Evolution of Westlaw

What better way to create a new legal research solution than to start with what is already the industry's premier legal research service So we used Westlaw customer data and feedback to build on the core Westlaw advantages and *create WestlawNext a more* "you-centric" system that offers an easier, more efficient way to do legal research

Easier to Use

An inviting dashboard is the first sign your legal research is more like the way you think – and the way you work It's where complete answers don't require complex searches And where the tools to manage what you've found are built right into your workflow

Dramatically Improved Search

Powerful, exclusive WestSearch technology *senses what you're looking for and intuitively* connects other relevant content you may not have considered

Analyze and Organize More Efficiently

Quick access to relevant information helps you get more accomplished, more efficiently With research folders, you can tag and assign information as you go, so when your research is complete it's *already organized You can also* search 12 months of research history, highlight *text for later reference, copy and paste with Bluebook* citations, and add personal notes

More Relevant, Inclusive Search Results

Every WestlawNext search automatically leverages West's respected editorial analysis, Key Number taxonomy, and state-of-the-art search technologies to bring you more relevant, thorough results

- Your search is all-inclusive for your jurisdiction or topical practice area, there's no need to pick and choose databases if you don't want to
- You'll see the most relevant documents at the top of the list, with confidence you didn't miss important information
- Filter your results in seconds – Just fill in the blank or check a box to limit your results
- View results organized by content type – View the most relevant documents either in a combined list or sorted by content types Either way, you know your research is complete
- Get related on-point information – *Related Documents* is another way WestlawNext brings relevant information to you, instead of you having to search exhaustively It's the "best of the rest" from select primary and secondary sources

Giving You Total Research Confidence

By starting with the solid foundation provided by Westlaw's core advantages, then adding new, more efficient, intuitive ways to search *and organize results, WestlawNext gives* you confidence Confidence you've found the most relevant documents on your issue Confidence you didn't miss important information Confidence your research helps build a winning case

However you want to search, we meet you there

Easier searching enables you to enter your search however you wish, then choose a jurisdiction The system automatically recognizes the format of your query

Project Folders allow you to drag-and-drop key documents and text snippets into folders organized by issue, client, or topic, which puts all vital information in one place for quicker access later

View top results all together or sorted by content type

Westlaw

Can a municipality be held liable for civil

SEARCH

VIEW

Overview	1
Cases	524
Statutes	45
Regulations	98
Administrative Decisions & Guidance	100
Trial Court Orders	20
Secondary Sources	193
Briefs	259
Pleadings, Motions & Memoranda	72
Expert Testimony	100
Jury Verdicts & Settlements	100
Pending & Proposed Legislation	100
Pending & Proposed Regulations	100
All Results	2,366

NARROW

Search within results

Jurisdiction

Federal 524

Date

All

Reported Status

Cases (524)

1 20 Sort by Relevance

Select all items No items selected

Monell v Department of Social Services of City of New York

Supreme Court of the United States June 06 1978 436 U S 658 98 S Ct 2018 75-1914

Female **employees** of the Department of Social Services and the Board of Education of the City of New York brought an action challenging the policies of those bodies in requiring pregnant

A **municipality** cannot be **held liable** for **violation** of **civil rights** solely because **employees** is a tort feasor a **municipality** cannot be **held liable** under the **Civil Rights** Act of 1871 on a respondeat superior theory 42 U S C A § 1983

In particular we conclude that a **municipality** cannot be **held liable** solely because it employs a tortfeasor or in other words a **municipality** cannot be **held liable** under § 1983 on a respondeat superior theory

From the foregoing discussion it is readily apparent that nothing said in debate on the Sherman amendment would have prevented **holding** a **municipality liable** under § 1 of the **Civil Rights** Act for its own **violations** of the Fourteenth Amendment

Alleged policy of a Department of Social Services and the Board of Education of the City of New York in requiring pregnant **employees** to take unpaid leaves of absence before those leaves are required for medical reasons involved official policy as the moving force of the alleged constitutional **violation** so that those bodies could be sued and **held liable** for the equitable relief of back pay under the **Civil Rights** Act of 1871 42 U S C A § 1983

City of Canton, Ohio v Harris

Supreme Court of the United States February 28 1989 489 U S 378 109 S Ct 1197 86-1088

Detainee brought **civil rights** action against city, alleging **violation** of her right to

» RELATED DOCUMENTS

Secondary Sources

What constitutes policy or custom for purposes of determining liability of local government unit under 42 U S C A. § 1983—modern cases

61 A L R Fed 549

The ALR databases are made current by the weekly addition of relevant new cases.

American Law Reports ALR Federal

In order to **hold** a **municipality liable** for **civil rights violations** of its **employees** under § 1983, the **municipality** must have acted in accordance with a government policy or custom, whether made by its lawmakers or those whose edicts or acts may fairly be said to represent official policy

LOCAL GOVERNMENT LIABILITY UNDER SECTION 1983

October 25-26, 2007

Litigation and Administrative Practice Course Handbook Series

Brown dealt with whether a **municipality** could be **held liable** on a single decision to hire when the hired **employee violated** the plaintiff's constitutional rights Lewis, on the other hand, did not even deal with direct **municipal liability**

Filter your results by key word, jurisdiction, type of action, law firm, judge, and more

Visual indicators mark if you have opened a document (Already Viewed), saved it to a folder (Folder), or attached personal notes to it (Note) – so you know your research is done

THOMSON REUTERS

Jennifer M Korthan
Government Account Manager

127 Fawnlake Drive
Houston, TX 77079
Phone (713) 419-7355
Jennifer korthan@thomsonreuters com

June 21, 2012

Ms Bonita Quiroga
Director
Galveston County Office of Justice Administration
600 59th Street
Galveston, TX 77550

RE: Sole Source Designation—Westlaw/WestlawNext

Dear Ms Quiroga

West, the foremost provider of integrated information solutions to the U S legal market, has been providing research materials to the legal and professional community for more than 135 years We are pleased to have the opportunity to provide you with information concerning Westlaw, our online legal, news, and business information research service containing more than 32,800 databases

This letter is to confirm West's status as the sole source publisher of Vernon's® Texas Statutes and Codes Annotated, and to confirm West's status as the sole provider for the following exclusive content, features, and services on Westlaw

Exclusive Features and Services in WestlawNext:

- **WestSearch.** WestSearch is the world's most advanced legal search engine It leverages more than 100 years of West's editorial analysis of the law, and it emulates the best practices of experienced legal researchers It incorporates the following key components
  - ***West Key Number System***—The West Key Number System is the foundation of WestSearch Because thousands of West attorney editors have read, summarized, and classified the law by topic for more than 100 years, WestSearch can identify the topics of law best represented by the terms of a search and return highly relevant documents for those topics, even if the documents don't have the terms that were put into the search box
  - **KeyCite**—KeyCite maps the citation network among all federal and state cases in the West National Reporter System (as well as more than 1 million unpublished cases), federal and state statutes, and thousands of secondary source publications WestSearch analyzes the rich connections among documents, making results more inclusive and bringing the most relevant documents to the top of the list
  - **West Secondary Sources**—With thousands of practice guides, legal encyclopedias, and authoritative treatises, WestSearch can find primary law that is heavily discussed in each jurisdiction and detect similar phrases that apply to the concepts in question

  WestSearch employs West's editorial assets much like an expert researcher would—only faster—to find the best documents for a search It also learns from the research of

professional users of WestlawNext, so that the great results delivered today just get better and better

- **Case Summaries.** These editorially created summaries help researchers to move through result lists efficiently, providing understanding at a glance what a case is about

- **Foldering.** WestlawNext allows users to organize and manage their research by storing their documents and text snippets in dedicated folders by issue, client, or topic Users have complete control of the folders on WestlawNext, including the folder name They can save the document they are viewing with a few mouse clicks, or they can highlight portions of document and save that selected text to a folder Users can even use drag-and-drop to add documents to a folder

- **Notes and Highlighting.** WestlawNext's new Notes and Highlighting feature allows users to highlight text online as they do with print materials This helps researchers to refocus on their previous research when they return to a document Users can type in their own personal notes on a particular case for future reference, make a note to themselves to follow up on something, and overall, keep their thought process going and productively captured

- **System Availability.** West's expertly trained staff helps ensure that uninterrupted Westlaw service is provided 24 hours a day, 7 days a week, 365 days a year In contrast, other computer-assisted legal research providers shut down their systems regularly (e g , nightly, weekly) for maintenance and updating

Exclusive Features and Services in Westlaw/WestlawNext

- **KeyCite Citator Service.** KeyCite is a full-service citator that helps users determine whether a case is good law by tracing the history of a case, statute, or federal administrative decision KeyCite also retrieves all citing references, which include cases, statutes, administrative materials, and secondary sources The following are among the many exclusive citator features and services available on Westlaw

  - ***West Key Number System Integration.*** KeyCite is completely integrated with West's exclusive topic and key number system, the most accurate tool devised for finding on-point law

  - ***More Citing References.*** KeyCite provides more citing references, including references to more than 1,200 law reviews, thousands of ALR annotations and Am Jur 2d articles, USCA, *Code of Federal Regulations*, statutes from all 50 states, select administrative decisions, state jurisprudence encyclopedias, and numerous treatises. In fact, KeyCite has more than two times as many citing references overall and averages more than two times as many citing references per document as the nearest competitor

  - ***Headnote References.*** KeyCite provides the full text of West headnotes, which helps users to quickly limit citing references to a relevant point of law KeyCite contains 50% more headnote references than any other citator

  - ***Analytical Sources.*** With more than 3,100 analytical sources, KeyCite gives users more expert analyses than any other citator

  - ***Pending Legislation.*** KeyCite notifies users of pending legislation that may affect a federal or state statute (available for all 50 states)

  - ***Graphical KeyCite.*** With KeyCite, users can display the direct history of a case, which traces the case through the appellate process, in an easy-to-read graphical view With this graphical view of direct history, every reversal, rehearing, reconsideration, denial of

certiorari, or other action in a case is placed in context As a result, the graphical view can save users valuable time when they are checking the procedural history of a case

- **StatutesPlus.** Westlaw StatutesPlus combines book-like indexing, browsing, and viewing with links to everything discussing a given statute Users can find, verify, read, and interpret statutes with amazing efficiency This powerful statutes-research feature is a Westlaw exclusive
- **PastStat Locator.** With PastStat Locator, a Westlaw exclusive, users can view prior versions of sections in USCA, as well as prior versions of various states In all jurisdictions, PastStat Locator can also rebuild the Table of Contents and show how it existed on a particular date PastStat Locator can also identify when a statute or amendment has a future activation date, or when a statute or amendment is due to lapse Additionally, PastStat Locator also tracks renumbered statute sections
- **Graphical Statutes.** Graphical Statutes, available exclusively on Westlaw, revolutionizes statute research by charting legislative changes and linking related documents in an easy-to-read display From a single screen, researchers can easily track changes in the law, locate relevant legislative history materials, read important case law, and check for possible amendments Graphical Statutes is available for USCA and the statutes for select states
- **RegulationsPlus.** RegulationsPlus, a Westlaw exclusive, provides a comprehensive and efficient federal regulatory research system that provides researchers with the tools to complete their regulations research more efficiently and with complete confidence RegulationsPlus helps researchers stay fully informed on any regulatory issue with editorial summaries of case law decisions, KeyCite notification of changing and proposed regulations, version history, citing references and more

Exclusive Content

- **National Reporter System.** Since 1879, West's National Reporter System has compiled and organized federal and state case law into a cohesive body of law that can be researched within and across jurisdictions West's National Reporter System is available exclusively on Westlaw
- **West Key Number System.** The West Key Number System, a Westlaw exclusive, is the master classification system of U S law and is widely regarded as the cornerstone of effective legal research It helps users to quickly locate and identify cases with the same or similar legal concepts and principals in any jurisdiction in the U S
- **Editorial Enhancements.** For more than 100 years, West attorney-editors have been providing editorial enhancements to case law, statutes, and other legal materials No other research service can match West's editorial experience West's exclusive enhancements include headnotes (more than 350,000 created annually), synopses (more than 60,000 created annually), and parallel citations (more than 500,000 added annually) West's headnotes are classified to West's exclusive Key Number System, which helps users find more relevant cases
- **Correction and Verification Process.** West attorney-editors provide the most exhaustive verification and correction process in the legal publishing and information industry West is the only legal information provider to engage in these quality control steps to ensure the accuracy and reliability of the data
- **Restatements of the Law.** The Restatements of the Law are principles of black letter law distilled from case law The restatement databases on Westlaw provide a section's black letter law, reporter's notes, commentary, illustrations, and annotations in one document First

Restatements of the Law, available exclusively on Westlaw, are provided for several areas of law (e g , contracts, torts) The first Restatements can help researchers trace the evolution of a law, or an area of law

- **Uniform Laws Annotated.** The Uniform Laws Annotated (ULA), available exclusively on Westlaw, provides an extensive reference to the text of uniform laws, prepared under the sponsorship of the National Conference of Commissioners on Uniform State Laws and the American Law Institute ULA examines acts recommended for adoption in all states, as well as pinpoints state variations. It also includes annotations to cases decided in adopting jurisdictions
- **National Digest System.** West's Key Number Digests have been an essential case-finding tool since the United States Digest was first published in 1848 A digest is a multi-volume index to the law consisting of major topic headings, thousands of subheadings, and short summaries of legal propositions stated in published court cases. These summaries are commonly referred to as headnotes
- **American Jurisprudence Library.** The American Jurisprudence Library products provide fast, authoritative answers to many aspects of civil, criminal, substantive, and procedural law Westlaw provides exclusive online access to the full library, which includes American Jurisprudence 2d, Am Jur Proof of Facts, Am Jur Trials, and AmJur Pleadings and Practice Forms Annotated
- **Corpus Juris Secundum (CJS).** CJS, available exclusively on Westlaw, helps researchers understand unfamiliar areas of law by providing links to cases, statutes, regulations, West key Numbers, Restatements of the Law, and more. CJS covers the full breadth and depth of the law and is cited to tens of thousands times by the courts It provides quick overviews of topics with Black Letter Summaries and is also fully integrated with the West Key Number System
- **Public Utilities Reports (PUR).** Westlaw has exclusive online access to *Public Utilities Reports, Fourth Series*, the only case law reporter devoted to state-level regulation of public utilities
- **Briefs on Westlaw.** Westlaw provides access to an extensive and exclusive collection of appellate briefs databases at both the federal and state levels As of April 2011, Westlaw contains more than 2 2 million separate documents and the number of briefs is growing monthly Many of the briefs databases, such as U S Supreme Court Petitions for Certiorari, are added to Westlaw shortly after being filed with the court
- **West Reporter Images.** West Reporter Images provides cost effective, easy access to an exact electronic copy of a National Reporter System case through westlaw com Because WRI is tied directly to the West published National Reporter System cases, no other online providers can provide a comparable product

If you have any questions concerning this document or require additional information, please do not hesitate to contact me

Sincerely,

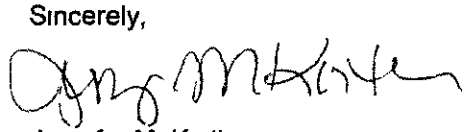

Jennifer M Koithan

WEST ORDER FORM FOR *WESTPACK* PRODUCTS
610 Opperman Drive
St. Paul, MN 55164-1803
Tel: 651/687-8000

WEST
A Thomson Reuters business

REQUIRED

Check West account status below as applicable: Rep Name & Number Randy Lysdale 0058144

New ____ (NACI Form attached) Existing with Increase Credit Limit ____ (NACI Form attached)

Existing with no changes X Existing with changes ____ (Permanent name change must attach a Customer Name Change Form)

Acct # 1003334699 PO # ____ Date 6/5/2012

Name/Subscriber Galveston County Law Library Bill To Acct # ____

Order Confirmation Contact Name Bonnie Quiroga

E-Mail Bonnie.Quiroga@co.galveston.tx us

Westlaw Password Contact Name (for password delivery) Bonnie Quiroga

E-Mail Bonnie.Quiroga@co galveston tx.us

IF NEEDED

Permanent Address Change ____ One-Time Ship To ____ Additional Ship To ____ Additional Bill To ____

Name ____ Attn: ____

Address ____ Suite/Floor ____

City ____ State ____ County ____ Zip ____

WestPack WestlawPRO Products

WestPack Promotion Code WPK3

Full Svc #	WestlawPRO Products	# of Passwords/ FTEs/Students/ Terminals/ Conc.Patron/CD Users	Monthly Banded/ Base Rate	Per User Rate	Other	Total Monthly WestlawPRO Charges
40988736	Patron Select - Westlaw Next	6 Terminals	$5,179		-33%	$3,469.93

Notes:

Total Monthly Charges $ 3,469.93

WestPack Print and CD-ROM Products

Full Svc #	WestPack Print and CD-ROM Products	-Quantity of WestPack Titles- New *	Existing **	List/CD-ROM Charges	Other	Total List/CD-ROM Charges
See Attached						

† Total Charges ____

† **Total Charges includes charges from attached page 2, if applicable.**

* This is a new title for Subscriber or Subscriber maintains an existing subscription to this WestPack title and desires additional copy(ies) ship and enter subscription(s) for the requested title

** Subscriber maintains existing subscription(s) to this WestPack title – do not ship.

Monthly WestlawPRO Charges and CD-ROM Charges are billed on the date West processes Subscriber's order and continue for the minimum term of complete calendar months elected by Subscriber with his/her initials below ("Minimum Term"). Subscriber also agrees to maintain all subscriptions to the WestPack print products (new and/or existing as set forth above) during the Minimum Term and the charges for Subscriber's WestPack print products (both initial print charges ("Initial WestPack Charges") and print and CD-ROM subscription services charges including CD-ROM Charges ("WestPack Subscription Charges")) shall be billed as set forth herein. Upon conclusion of the Minimum Term, CD-ROM Charges and WestPack Subscription Charges are billed thereafter at up to then-current rates. Any additional users added to any existing Per User WestlawPRO and/or CD-ROM product licensed by Subscriber from West shall be tied to the Minimum Term of the underlying Order Form for such product(s).

Subscriber's Initials for 12, 24 or 36 Month Minimum Term

____ **12 Month Minimum Term** for WestlawPRO, WestPack Print and CD-ROM Products – 20% WestPack Print and CD-ROM Product discount (new and existing)

____ **24 Month Minimum** Term for WestlawPRO, WestPack Print and CD-ROM Products – 30% WestPack Print and CD-ROM Product discount (new and existing) – Monthly WestlawPRO Charges for second 12 months not to increase by more than ____ % over Monthly WestlawPRO Charges for initial 12 months.

D* MM **36 Month Minimum Term** for WestlawPRO, WestPack Print and CD-ROM Products – 50% WestPack Print and CD-ROM Product discount (new and existing) – Monthly WestlawPRO Charges for second 12 months not to increase by more than 3 ___% over Monthly WestlawPRO Charges for initial 12 months and Monthly WestlawPRO Charges for third 12 months not to increase by more than 3 ____% over Monthly WestlawPRO Charges for second 12 months.

Non-Government Subscribers Only: Upon conclusion of the WestlawPRO Minimum Term, the Subscriber Agreement and this Order Form will automatically renew for consecutive 12-month periods ("Renewal Term") and the Monthly WestlawPRO Charges for the Renewal Term(s) will increase 7% per year unless either party gives written notice of cancellation to the other party at least 30 days in advance of any Renewal Term, including the first Renewal Term. Additionally, West may at its discretion provide Subscriber with notice at least 60 days in advance of any Renewal Term of a Monthly WestlawPRO Charge increase different from 7% after which Subscriber shall have 30 days to provide West with written notice of cancellation if Subscriber does not wish to renew. Excluded Charges may be modified as set forth in the Subscriber Agreement (as defined herein). Subscriber is responsible for all Excluded Charges as incurred. During any Renewal Term, Subscriber's access to and use of Westlaw shall be governed by the Subscriber Agreement.

Government Subscribers Only: Upon conclusion of the WestlawPRO Minimum Term, Monthly WestlawPRO Charges are billed thereafter at up to then-current rates. Excluded Charges and Monthly WestlawPRO Charges (after the Minimum Term) may be modified as set forth in the Subscriber Agreement (as defined herein). Subscriber is responsible for all Excluded Charges as incurred. After the Minimum Term, Subscriber's access to and use of Westlaw shall be governed by the Subscriber Agreement.

____ **Subscriber's Initials.** Subscriber has _____ attorneys (partners, shareholders, associates, contract or staff attorneys, of counsel and the like), corporate users or students and Personnel (if ordering a Paralegal Plan) for the location identified above or FTE's (if ordering Campus Research) for WestlawPRO, CD-ROM case law and/or West LegalEdcetor orders. If West learns that the actual number exceeds the number certified above, West reserves the right to increase Subscriber's charges as applicable.

Internal Corporate Use Only		BND

Technical Contacts for Westlaw Patron Access and Campus Research and Thomson Innovation Administrator

Technical Contact Name (please print): Bonnie Quiroga

Telephone: (409) 770-5230

E-Mail Address: Bonnie.Quiroga@co.galveston.tx.us

Current Account #: 1003334699

D* Patron Access* IP Address: _____

One IP Address per terminal. Additional pages may be attached if needed.

Campus Research IP Address Range _____

* Orders submitted without IP Address information may delay set up and access

D* MM Subscriber Initials 8 Terminals will be used for Patron Access (not required for Campus Research)

_____ Subscriber Initials ___ Concurrent users will be used for Patron Access (not required for Campus Research).

In the event Subscriber desires to increase the number of publicly accessible terminals or concurrent users, Subscriber must contact West. If West learns that Subscriber has increased the number of publicly accessible terminals, West reserves the right to increase Subscriber's charges as applicable.

For Internal Office Use Only
OF Instructions: Max Concu - # of terms/Eml to WTC/Blk Ancil/1 term = 5 atty = 1 pw/Tech cont = 59

Thomson Innovation Administrator Name (please print). _____

E-Mail Address: _____

	WestlawPRO Renewals *Current Monthly WestlawPRO Charges is/are rate(s) in effect as of the date of this Order Form and may not be the rate(s) in effect when rate(s) for the Renewal Term is/are calculated, depending on the length of the current Minimum Term or current Renewal Term	

Sub Mail #	WestlawPRO Products	Current Monthly WestlawPRO Charges*

Notes:

_____**Subscriber's Initials for 12 Month Renewal Term** ** Subscriber agrees to commit to an additional 12 months and the Monthly WestlawPRO Charges for the such additional 12 months shall be _____ % more than the Monthly WestlawPRO Charges in effect at the end of the current Minimum Term and/or current Renewal Term

_____**Subscriber's Initials for 24 Month Renewal Term** ** Subscriber agrees to commit to an additional 24 months. The Monthly WestlawPRO Charges for the first additional 12 months shall be _____% more than the Monthly WestlawPRO Charges in effect at the end of the current Minimum Term and/or current Renewal Term and the Monthly WestlawPRO Charges for the second additional 12 months shall be _____% more than the Monthly WestlawPRO Charges for the first additional 12 months.

_____**Subscriber's Initials for 36 Month Renewal Term** ** Subscriber agrees to commit to an additional 36 months. The Monthly WestlawPRO Charges for the first additional 12 months shall be_____% more than the Monthly WestlawPRO Charges in effect at the end of the current Minimum Term and/or current Renewal Term and the Monthly WestlawPRO Charges for the second additional 12 months shall be ___ % more than the Monthly WestlawPRO Charges for the first additional 12 months. The Monthly WestlawPRO Charges for the third additional 12 months shall be _____ % more than the Monthly WestlawPRO Charges for the second additional 12 months.

In the event a promotion in the underlying Order Form required Subscriber to maintain a subscription to certain West products in order to be eligible for such promotion ("Dependency Subscription(s)"), Subscriber must also maintain such Dependency Subscription(s) during the Renewal Term so that Subscriber may be eligible for the pricing set forth herein. In the event Subscriber terminates any of the Dependency Subscription(s) during the Renewal Term, any promotions and related discounts for the Dependency Subscription(s) shall immediately terminate

**Effective at the end of the current Minimum Term or current Renewal Term.

Non-Government Subscribers Only: Upon conclusion of the Renewal Term designated above, the Subscriber Agreement and this Order Form will automatically renew for consecutive 12-month periods, and the Monthly WestlawPRO Charges for the Renewal Term(s) will increase 7% per year unless either party gives written notice of cancellation to the other party at least 30 days in advance of any Renewal Term. Additionally, West may at its discretion provide Subscriber with notice at least 60 days in advance of any Renewal Term of a Monthly WestlawPRO Charge increase different from 7% after which Subscriber shall have 30 days to provide West with written notice of cancellation if Subscriber does not wish to renew. Excluded Charges may be modified as set forth in the Subscriber Agreement. Subscriber is responsible for all Excluded Charges as incurred. During any Renewal Term, Subscriber's access to and use of Westlaw shall be governed by the Subscriber Agreement.

Government Subscribers Only: Upon conclusion of the Renewal Term designated above, Monthly WestlawPRO Charges are billed thereafter at then current rates. Excluded Charges and Monthly WestlawPRO Charges (after the Renewal Term) may be modified as set forth in the Subscriber Agreement. Subscriber is responsible for all Excluded Charges as incurred. During the Renewal Term and thereafter, Subscriber's access to and use of Westlaw shall be governed by the Subscriber Agreement.

	Westlaw Passwords and QuickView+					
Last Name	**First Name, M.I.**	**Atty**	**Lib**	**Para**	**Other**	**Product(s)**

Subscriber shall authorize which Westlaw password(s) shall have access to QuickView+. Actual charges billed by West may vary from charges reported on QuickView+. Subscriber shall pay charges as billed. West does not warrant and has no liability with respect to the accuracy of charges or other information on QuickView+.

Authorized Westlaw Password Holder for Westlaw QuickView+

Last Name _____ **First Name** _____ _____ **E-mail** _____

	Additional Non-WestPack WestlawPRO, CD-ROM and West LegalEdcenter Products					
Full Svc #	Non-WestPack WestlawPRO/ CD-ROM/WLEC Products	# of Pwds Conc. CD Users	Mo. Banded/ Base Rate	Per User/Conc. User Rate	Other	Total Monthly WestlawPRO/CD/ WLEC Charges

Notes:

Total Monthly Charges $ _____

Monthly WestlawPRO Charges, CD-ROM Charges and West LegalEdcenter Charges, are billed on the date West processes Subscriber's order and continue for a minimum of 12 complete calendar months ("Minimum Term") Upon conclusion of the Minimum Term, CD-ROM Charges are billed thereafter at then-current rates. If Subscriber elects a longer Minimum Term the Monthly WestlawPRO Charges and/or West LegalEdcenter Charges will be billed as set forth herein. Any additional users added to any existing Per User WestlawPRO and/or CD-ROM product licensed by Subscriber from West shall be tied to the Minimum Term of the underlying Order Form for such product(s)

_____**Subscriber's Initials for 24 Month WestlawPRO and/or West LegalEdcenter Minimum Term** Subscriber agrees to commit to a Minimum Term of 24 months and the Monthly WestlawPRO Charges and/or West LegalEdcenter Charges for the second 12 months not to increase by more than _____ % over the Monthly WestlawPRO Charges and/or West LegalEdcenter Charges for the initial 12 months

_____**Subscriber's Initials for 36 Month WestlawPRO and/or West LegalEdcenter Minimum Term** Subscriber agrees to commit to a Minimum Term of 36 months and the Monthly WestlawPRO Charges and/or West LegalEdcenter Charges for the second 12 months not to increase by more than _ ___% over the Monthly WestlawPRO Charges and/or West LegalEdcenter Charges for the initial 12 months and the Monthly WestlawPRO Charges and/or West LegalEdcenter Charges for the third 12 months not to increase by more than _ % over the Monthly WestlawPRO Charges and/or West LegalEdcenter Charges for the second 12 months

Non-Government Subscribers Only: Upon conclusion of the WestlawPRO Minimum Term, including West LegalEdcenter product(s) that are part of a WestlawPRO Select, the Subscriber Agreement and this Order Form will automatically renew for consecutive 12-month periods ("Renewal Term"), and the Monthly WestlawPRO Charges for the Renewal Term(s) will increase 7% per year unless either party gives written notice of cancellation to the other party at least 30 days in advance of any Renewal Term, including the first Renewal Term. Additionally, West may at its discretion provide Subscriber with notice at least 60 days in advance of any Renewal Term of a Monthly WestlawPRO Charge increase different from 7% after which Subscriber shall have 30 days to provide West with written notice of cancellation if Subscriber does not wish to renew Excluded Charges may be modified as set forth in the Subscriber Agreement (as defined herein) Subscriber is responsible for all Excluded Charges as incurred During any Renewal Term Subscriber's access to and use of Westlaw shall be governed by the Subscriber Agreement. Upon conclusion of the West LegalEdcenter Minimum Term, as applicable solely to West LegalEdcenter product(s) that are not part of a WestlawPRO Select, West LegalEdcenter Charges are billed thereafter at up to then-current rates.

Government Subscribers Only: Upon conclusion of the WestlawPRO and/or West LegalEdcenter Minimum Term, Monthly WestlawPRO Charges and/or West LegalEdcenter Charges are billed thereafter at up to then-current rates Excluded Charges and Monthly WestlawPRO Charges (after the Minimum Term) may be modified as set forth in the Subscriber Agreement (as defined herein). Subscriber is responsible for all Excluded Charges as incurred After the Minimum Term, Subscriber's access to and use of Westlaw shall be governed by the Subscriber Agreement

_____ **Subscriber's Initials** Subscriber has _____ attorneys (partners, shareholders, associates, contract or staff attorneys, of counsel and the like), corporate users or students and Personnel (if ordering a Paralegal Plan) for the location identified above or FTE s (if ordering Campus Research) for WestlawPRO, CD-ROM case law and/or West LegalEdcenter orders If West learns that the actual number exceeds the number certified above, West reserves the right to increase Subscriber's charges as applicable

_____ **CD-ROM/DVD and/or West LegalEdcenter annual billing (please check if requested)**

West LegalEdcenter Online Features and Services:

_____ **Subscriber's Initials** - Subscriber acknowledges that each user will receive an initial e-mail communication from West LegalEdcenter which includes important information about using the service (including username and password), as well as ongoing communication regarding new online programs available in their practice area(s) and special announcements. Subscriber's users may opt out after the initial e-mail communication

Programs excluded from the Online CLE Pass shall be billed at then-current rates via credit card billing

	Additional Non-WestPack Print Products				
Full Svc #	Non-WestPack Print Products	Quantity	List Charges	Other	Charges

Notes:

Total Charges $ _____

Terms of Payment for Print Products. West's standard terms of payment for print products purchased are net 30 days West may elect to accept installment payments on the purchase price Installment payment terms are $ _____ per month plus tax for approximately _____ months until the purchase price, plus any additional amounts under this Order Form, is paid in full

Subscription Service, Passwords and West km. Subscription service may consist of updates and/or supplements to the service, including but not limited to (a) CD-ROM Libraries updated, replacement or supplemental CD-ROMs and online updates, and other related supplemental material; (b) Print Products pocket parts, pamphlets, replacement or auxiliary volumes, loose-leaf pages and other related supplemental materials; all of which may be billed separately at then-current rates. Subscriber hereby requests that West provide subscription services for the herein-described products at then-current rates until such subscription services are cancelled by West or cancelled upon written request by Subscriber after the Minimum Term for WestPack print or CD-ROM products. Any passwords issued herein may only be used by the person to whom the password is issued and sharing of passwords is STRICTLY PROHIBITED. Subscribers licensing only LiveNote/Case Notebook/Timeline/Pubisher Software will not be issued Westlaw passwords. Any West km software licensed hereunder must reside on a dedicated server provided and maintained by Subscriber at Subscriber's expense, and such server must be accessible to all Subscriber's authorized users. Subscriber's Westlaw Doc & Form Builder Data will be web hosted by West Upon termination of any Westlaw Doc & Form Builder subscription, related Westlaw Doc & Form Builder Data of Subscriber that is stored on West servers will be destroyed within 180 days of such termination.

General Provisions. This Order Form is subject to approval by West, a Thomson Reuters business ("West") in St. Paul, Minnesota and is governed by Minnesota law The state and federal courts sitting in Minnesota will have exclusive jurisdiction over any claim arising from or related to this agreement. Applicable sales, use, personal property, value added tax (VAT) or equivalent, ad valorem and other taxes are payable by Subscriber. Subscriber may be charged interest for overdue installments and subscriptions and for other open account charges If any installments, subscriptions, subscription services, Westlaw Charges or open account charges remain unpaid 30 days after becoming due, all unmatured installments, including all amounts that are or would become due and payable for the remaining term of Subscriber's Subscriber Agreement, shall become immediately due and payable at the sole option of West. Interest charges may be adjusted to the then-highest current rate allowable on Minnesota contracts This Order Form is non-transferable All collection fees, including but not limited to attorneys fees, are payable by Subscriber Transportation and handling (FOB origin) charges will be added for print products. West may request a current financial statement and/or obtain consumer credit report on the undersigned individual to determine creditworthiness West will only request consumer credit information on the undersigned if the undersigned is applying for credit as an individual or if the undersigned's consumer credit information is necessary for West to consider granting credit to the aforementioned company If Subscriber inquires whether a credit report was requested, West will provide information of such, if a report was received and the name, address and telephone number of the agency that supplied the report.

Returns. If Subscriber is not completely satisfied with any non-WestPack print or non-WestPack CD-ROM product received from West, the product may be returned within 45 days of the invoice date for a full refund or credit, in accordance with West's then-current returns policies. Westlaw Charges and West LegalEdcenter Charges are not refundable

	Online/CD-ROM Products to be Lapsed	
Full Svc #	**Online/CD-ROM Products**	**# of Passwords**
See Attached		

The Subscriber Agreement for Westlaw and CD-ROM Libraries, the applicable Schedule A price plan, (for WestlawPRO products and/or CD-ROM Libraries products), and/or the West LegalEdcenter Subscriber Agreement (for West LegalEdcenter products) and/or the Thomson Innovation Schedule and Third Party Terms Schedule (for Thomson Innovation) individually or jointly, as applicable, ("Subscriber Agreement") is/are hereby incorporated by reference and made part of this Order Form. In the event there is a conflict between the terms and conditions of the Subscriber Agreement and the terms and conditions of this Order Form, the terms and conditions of this Order Form shall control. Subscriber by his/her signature below, acknowledges his/her understanding and acceptance of the terms and conditions of the Subscriber Agreement.

4) * **Signature** X Mark Henry **Date** 8/21/12

AUTHORIZED REPRESENTATIVE FOR ORDER FORM

5) *
Printed Name Mark Henry
Title County Judge
Date August 21, 2012
Signature X Mark Henry

For Credit Card Transactions only: **Visa** _____ **Master Card** _____ **Am Ex** _____
Card # _____ **Expir. Date** _____ **Total Amt. to Charge** _____

Material Description	Material Number	Sold-To Account
WESTLAW SELECT	40,583,983	1003334699
WESTLAW ALL ANALYTICAL LIB 2000	30,302,108	1003334699
WESTLAW ANALYTICAL LIBRARY - TX	30,303,444	1003334699
GOVERNMENT GC ALL PRIMARY LAW MODULE	40,443,517	1003334699
WESTLAWPRO TX PRACTICE	30,304,608	1003334699
WESTLAW TX PRACTICE GUIDE	30,303,451	1003334699

WestlawNext Patron Access Select Modules Addendum
PROGRAM ID : CPRO

Date 6/5/2012

Account Name Galveston County Law Library

Account Number 1003334699

Subscriber's Initials for Modules elected by Subscriber

Please enter the state designation for each applicable Core or State-Specific Module specified

Core

- [x] WLN Patron Access Select State Core TX

State-Specific Modules

- [ ] ____Additional State Core
- [x] TX State Analytical
- [ ] ____State Appellate Court Briefs Plus
- [ ] ____State Business Law
- [ ] ____State Civil Pleadings Motions & Memoranda Plus
- [ ] ____State Construction Law
- [ ] ____State Court Dockets
- [ ] ____State Criminal Secondary for Patron Access
- [ ] ____State DUI Law
- [ ] ____State Elder Law
- [ ] ____State Employment Law Analytical
- [ ] ____State Environmental Law
- [ ] ____State Environmental Counselor
- [x] TX State Estate Planning
- [x] TX State Family Law
- [ ] ____State Federal Materials
- [ ] ____State FormFinder
- [ ] ____State Graphical Bundle
- [ ] ____State Jurisprudence
- [ ] ____State Jury Instructions
- [ ] ____State KeyRules
- [ ] ____State KeyRules Plus
- [ ] ____State Legislative History
- [ ] ____State Municipal Law
- [x] TX State Practice Series
- [ ] ____State Real Property
- [ ] ____State Worker's Compensation Plus

National and Topical Modules

- [ ] Admin Code Multi-State
- [ ] All AmJur
- [x] All Analytical
- [ ] All Briefs
- [ ] All Federal Cases
- [ ] All Federal Primary Law
- [x] All Primary Law
- [ ] All State Cases
- [ ] All State Statutes
- [ ] Am Jur Pleading & Practice Forms
- [ ] Am Jur Proof of Facts
- [ ] Am Jur Trials
- [ ] American Jurisprudence (Am Jur)
- [ ] American Jurisprudence Legal Forms
- [ ] American Law Reports (ALR)
- [ ] Bankruptcy Cases
- [ ] Bankruptcy Analytical
- [ ] Causes of Action

National & Topical Modules (Continued)

- [ ] Civil Rights/Disabilities Litigation Specialist
- [ ] Corpus Juris Secundum (CJS)
- [ ] Couch on Insurance
- [ ] Employment Coordinator
- [ ] Employment Discrimination Coordinator
- [ ] Financial Crisis for Patron Access
- [ ] Fletcher Cyclopedia and Forms
- [ ] FormFinder Advantage
- [ ] Graphical Statutes
- [ ] Hornbook Library (not available for Law School Libraries)
- [ ] Immigration Primary Law
- [ ] Jury Verdicts
- [ ] Law Reviews and Journals
- [ ] Legislative History – Fed & All State
- [ ] National Criminal Secondary for Patron Access
- [ ] National FormFinder
- [ ] National Jury Instructions
- [ ] Nichols Cyclopedia of Legal Forms
- [ ] Norton Bankruptcy Law
- [ ] National Reporter Images (not available for Law School Libraries)
- [ ] Nutshell Library (not available for Law School Libraries)
- [ ] Nutshell Library Plus (not available for Law School Libraries)
- [ ] PastStat Locator
- [ ] Personal Injury Damages
- [ ] Personal Injury Damages Analytical
- [ ] Real Property
- [ ] Public Employee Reporters
- [ ] Regulations Plus
- [ ] Related Documents
- [ ] Restatements of the Law
- [ ] Social Security Gold
- [ ] Social Security Platinum
- [ ] Tribal Law for Patron Access
- [ ] USCA
- [ ] West Legal Forms
- [x] TX Practice Guide
- [ ] ____
- [ ] ____
- [ ] ____
- [ ] ____
- [ ] ____
- [ ] ____
- [ ] ____

6

WEST®
A Thomson Reuters business

Government Accounts Only

Addendum to West Order Form for WestlawPRO Orders

Subscriber: Galveston County Law Library

Account #: 1003334699

Date of Order Form: 6/5/2012

1 **Effect of Addendum**. The underlying Subscriber Agreement for Westlaw and CD-ROM Libraries, West Order Form and Schedule A Plan 2 WestlawPRO (collectively the "Subscriber Agreement"), between Subscriber and West is amended as specifically set forth herein to incorporate the terms of this Addendum. As amended, the Subscriber Agreement shall remain in full force and effect according to its terms and conditions. All terms used in this Addendum shall have the meanings attributed to them in the Subscriber Agreement. This Addendum supersedes any and all prior understandings and agreements, oral or written, relating to the subject matter. In the event there is a conflict between the terms and conditions of the Subscriber Agreement and the terms and conditions of this Addendum, the terms and conditions of this Addendum shall control.

2 **Modification of Order Form-Non Availability of Funds**. If Subscriber fails to receive sufficient appropriation of funds or authorization for the expenditure of sufficient funds to continue service under the Order Form, or if Subscriber receives a lawful order issued in or for any fiscal year during the Minimum Term or Renewal Term of the Order Form that reduces the funds appropriated or authorized in such amounts as to preclude making the payments set out therein, Subscriber may submit a written notice to West seeking cancellation of the service, the Subscriber Agreement and the Order Form, if permitted under applicable law. Subscriber shall provide West with notice not less than thirty (30) days prior to the date of cancellation, and shall include a written statement documenting the reason for cancellation, including the relevant statutory authority for cancelling, and an official document certifying the non-availability of funds (e g., executive order, an officially printed budget or other official government communication). Upon West's receipt of a valid cancellation notice, Subscriber shall pay all charges incurred for any products and/or services received prior to the effective date of the cancellation (and in the case of print/CD-ROM products, return all unpaid print/CD-ROM products and updates).

West, a Thomson Reuters business	**Subscriber**
	Signed:
Accepted by	Name (please print): Mark Henry
Title:	Title: County Judge
Date:	Date: August 21, 2012

7

AGENDA ITEM #28a2

WESTLAW PROPOSAL
TEXAS SELECT

PROPOSAL FOR

Galveston County District Attorney and Courts

Prepared by
Randall Lysdale
3213 Sunrise Dr
Rowlett, TX 75088
(214) 402 4736
randy.lysdale@thomsonreuters.com

July 1, 2012

BETTER RESULTS FASTER

Westlaw

Table of Contents

Summary of Modules

Texas Select Core

Texas Primary Law

Texas Select Modules

Texas Analytical
Texas Appellate Court Briefs Plus
Texas Criminal Secondary
Texas Employment Law Analytical
Texas Graphical Statutes Bundle
Texas Municipal Law
Texas Practice Guide
Texas Practice Series
Texas Real Property
Texas State Court Dockets

National and Topical Modules

All Analytical
All Primary Law
Combined Jury Verdicts
Corpus Juris Secundum
FormFinder Advantage

Features and Services

Content, Pricing and Next Steps

Summary of Contents

Texas Select Core

Texas Primary Law
Texas Select combines caselaw, annotated statutes, Attorney General opinions, and other state materials for Texas as well as KeyCite®, into a single, integrated research tool West case synopses and headnotes summarize the facts, issues, procedural history, holdings and disposition of a decision – information that might otherwise be scattered throughout the opinion Annotated Statues include Statutory Credits, Historical and Statutory Notes, Cross-References, and Notes of Decisions that provide quick summaries of cases *interpreting or applying* the statute in question

Texas Select Modules

Texas Analytical
Analytical gives you a single, comprehensive integrated legal research tool This collection of state-specific information is a must

Texas Appellate Court Briefs Plus
Provides access to state-specific briefs along with cases in the Federal Circuit

Texas Criminal Secondary
State Criminal Secondary provides easy access to in-depth analytical materials and practice guidance along with checklists, news and more

Texas Employment Law Analytical
Employment Law Analytical includes employment law industry news and state and general employment law practice guides

Texas Graphical Statutes Bundle
Graphical Statutes charts the legislative changes You can see all previous, current, and future versions and track pending changes *It also allows you to instantly find the* version of the statute that was in effect at the time an offense, injury or other legal matter took place Legislative History delivers key insights into the true legislative intent behind the words of the law that can help support *your legal position* Understanding the history of a law helps you to understand how to interpret it

Texas Municipal Law
Municipal Law packages key municipal law content that is easy to access and saves you time, every step of the way

Texas Practice Guide
Practice Guide is the how-to guide to state-specific law

Texas Practice Series
Practice Series provides critical legal resource materials covering all available state forms, treatises and analytical materials Written by state experts, Practice Series is the *preeminent analytical law series*

Texas Real Property
Real Property is designed around what you told us you needed – your workflow, your tasks, your need for strategic information The result is a resource that packages key real property law content and saves you time every step of the way

Texas State Court Dockets
State Court Dockets is designed to simplify the way you locate and retrieve court dockets It gives you an efficient and cost-effective alternative for tracking, managing and monitoring cases as they make their way through the courts State Court Dockets also links to other important case filings, such as pleadings and motions

National and Topical Modules

All Analytical
All Analytical combines expert legal analysis with forms, jury instructions and more This impressive collection of titles enables quick review of specific points in familiar areas of law and helps you cover unfamiliar ground with speed and ease

All Primary Law
All Primary Law compiles hundreds of state and federal law databases It contains coast-to-coast coverage of cases, statutes, attorney general opinions, administrative codes, and more

Combined Jury Verdicts
By making it easy for you to examine jury verdicts, settlements and arbitration awards from around the country, Combined Jury Verdicts lets you quickly and accurately determine potential award or liability It also helps you negotiate successfully and/or build winning cases by allowing you to evaluate which legal arguments , pleadings and other trial filings have been successful or unsuccessful in similar cases

Corpus Juris Secundum
Corpus Juris Secundum (CJS) is a comprehensive legal encyclopedia containing over 400 topics that are cited and quoted as authority in courtrooms across the country

FormFinder Advantage
Westlaw Form Finder Advantage searches the most *comprehensive, current collection of all state, national, and* general forms Plus, you can link beyond forms, checklists, or clauses to forms-related analytical documents You'll

immediately find reliable, up-to-date legal analysis and commentary

Westlaw.

Get unlimited access to the information you need.

Texas Primary Law provides essential resources at a fixed rate With unlimited access to your state's caselaw, statutes, administrative codes, AG Opinions, and law reviews and journals, you'll be able to find what you need with speed and ease

WESTLAW ADVANTAGES

There are three core advantages that separate Westlaw* from other research services

- **Comprehensive legal content**, including primary law, legal analysis, and litigation materials
- **Tools to help you find it faster**, such as editorial enhancements, industry-leading search and linking technologies, 24/7 research assistance, and more
- **Trusted accuracy** through case corrections and KeyCite®, the most complete, accurate, up-to-the-minute citation service

And with WestlawNext™ we built on these core advantages to make legal research easier and more intuitive than ever before

Editorial enhancements

West Key Number System

The West Key Number System* classifies American law into more than 400 topics – and 100,000 subtopics – relating to persons, property, contracts, torts, crimes, remedies, and government, accelerating your research by directing you to specific points of law

Case Synopses and Headnotes

West case synopses and headnotes summarize the facts, issues, procedural history, holdings and disposition of a decision – information that might otherwise be scattered throughout the opinion

Synopses and headnotes contain terms that may not have been used by the authoring judge, including terms of art and words that describe legally significant relationships among parties (e g , landlord and tenant, husband and wife)

Annotated statutes

- Statutory Credits show you citations to session laws from which a statute was derived
- Historical and Statutory Notes reveal the history of a statute that may be significant in its construction and application
- Cross-References/Library References lead you to relevant Key Numbers and to law reviews, treatises, and administrative code provisions
- Notes of Decisions provide quick summaries of cases interpreting or applying the statute in question

KeyCite citation research service

KeyCite is the easy-to-use, powerful citator that covers more than 4 million reported cases, 20 million headnotes, 1 million unpublished decisions, USCA*, statutes for all 50 states and CFR

This citator service verifies whether cases, statutes, administrative decisions and regulations remain good law In addition, KeyCite links to citing cases, administrative decisions, more than 700 law reviews and other analytical sources such as ALR®, Am Jur® and Wright & Miller*

See reverse side for content listings

* Linking may involve additional charges based on Westlaw plan inclusion Please check your plan for your specific charges

Texas Primary Law

Westlaw content included

CASELAW
Texas Cases
Texas Headnotes (Digest)
Texas Business Organizations Cases
Texas Civil Rights Cases
Texas Commercial Law and Contracts Cases
Texas Criminal Justice Cases
Texas Education Cases
Texas Energy Cases
Texas Environmental Law Cases
Texas Estate Planning and Probate Cases
Texas Evidence Cases
Texas Family Law Cases
Texas Finance and Banking Cases
Texas Government Benefits Cases
Texas Government Contracts Cases
Texas Health Law Cases
Texas Insurance Cases
Texas Labor and Employment Cases
Texas Legal Ethics and Professional Responsibility Cases
Texas Pension and Retirement Benefits Cases
Texas Products Liability Cases
Texas Professional Malpractice Cases
Texas Public Utilities Reports
Texas Real Property Cases
Texas Securities and Blue Sky Law Cases
Texas Tax Regulations
Texas Taxation Cases
Texas Tort Law Cases
Texas Workers' Compensation Cases

LEGISLATIVE SERVICE
Texas Legislative Service
Texas Historical Legislative Service

STATUTES AND COURT RULES
Texas Statutes 2006 – Annotated
Texas Statutes 2005 – Annotated
Texas Statutes 2004 – Annotated
Texas Statutes 2003 – Annotated
Texas Statutes 2002 – Annotated
Texas Statutes 2001 – Annotated
Texas Statutes 2000 – Annotated
Texas Statutes 1999 – Annotated
Texas Statutes 1998 – Annotated
Texas Statutes 1997 – Annotated
Texas Statutes 1996 – Annotated
Texas Statutes 1995 – Annotated
Texas Statutes 1994 – Annotated
Texas Statutes 1993 – Annotated
Texas Statutes 1992 – Annotated
Texas Statutes 1991 – Annotated
Texas Statutes 1990 – Annotated
Texas Statutes 1988 – Annotated
Texas Statutes 1987 – Annotated
Texas Statutes Unannotated
Texas Statutes Annotated
Texas Statutes General Index
Texas Environmental, Health & Safety Statutes
Texas Blue Sky Statutes
Texas Criminal Justice Statutes
Criminal Justice – Texas Court Rules
Texas Family Law Statutes
Texas Taxation Statutes
Texas Workers' Compensation Statutes
Texas Court Rules
Texas Trial Court Rules
Texas Court Orders

TEXAS ADMINISTRATIVE SERVICE
Texas Administrative Code
Texas Blue Sky Combined
Texas Blue Sky Regulations
Texas Administrative Code Index
Texas Register
Texas Attorney General Opinions
Texas Environmental Law Administrative Decisions
Texas Environmental Law Cases & Administrative Decisions
Texas Ethics Commission Advisory Opinions
Texas Legal Ethics & Professional Responsibility – Ethics Opinions
Texas Securities Administrative Decisions
Texas Tax Regulations
Texas Taxation Administrative Decisions
Texas Taxation Cases and Administrative Materials
Texas Workers Compensation Cases and Administrative Decisions
Texas Workers Compensation Administrative Code
Texas Workers' Compensation Administrative Decisions

INSURANCE MATERIALS
Texas Insurance Cases
Texas Insurance Statutes
Texas Insurance Statutes – Core Title
Texas Insurance Statutes – Related Titles
Texas Insurance Administrative Code
Westlaw Insurance – Texas Administrative Code – Core Title
Westlaw Insurance – Texas Administrative Code – Related Regulations
Texas Insurance Bulletins
Texas Insurance Statutes, Regulations and Bulletins

SPECIALIZED DATABASES
Sales and Use Tax Licenses – Texas
Texas Corporate Records & Business Registrations
Westlaw State Bulletins – Texas
West Legal Directory – Texas

JOURNALS AND LAW REVIEWS
Texas Journals and Law Reviews
American Journal of Criminal Law
Baylor Law Review
Currents International Trade Law Journal
Houston Business and Tax Law Journal
Houston Journal of Health Law & Policy
Houston Journal of International Law
Houston Law Review
Houston Lawyer
Journal of Air Law and Commerce
Journal of Forensic Document Examination
The Review of Litigation
SMU Law Review
Scholar St Mary s Law Review on Minority Issues
South Texas Law Review
St Mary s Law Journal
Texas Bar Journal
Texas Journal on Civil Liberties & Civil Rights
Texas Hispanic Journal of Law and Policy
Texas Intellectual Property Law Journal
Texas International Law Journal
Texas Journal of Business Law
Texas Journal of Women and the Law
Texas Law Review
Texas Review of Entertainment & Sports Law
Texas Review of Law and Politics
Texas Tech Law Review
Texas Tech Administrative Law Journal
Texas Wesleyan Law Review
Thurgood Marshall Law Review

Some exclusions apply Additionally, certain content may be accessible only on Westlaw Content subject to change Contact your West Representative for plan details

Visit west.thomson.com/westlaw

To order or for more information, contact your West Representative at 1-800-762-5272.

THOMSON REUTERS

© 2010 Thomson Reuters L 326527/2 10

WESTLAW
SELECT

Texas Analytical

TEXAS

Texas Analytical presents a comprehensive collection of critical legal resource materials including Texas Jurisprudence 3d, Texas Forms Legal and Business, and Texas Jurisprudence Pleading and Practice Forms 2d

Texas Jurisprudence 3d

Covers the entire body of Texas law with in-depth analysis of on-point cases, statutes, administrative rules and regulations, and constitutional provisions

- An incisive analytical statement of Texas civil and criminal law – substantive and procedural – based on state statutes and state and federal case law
- Cites to American Jurisprudence 2d, American Law Reports, American Jurisprudence Trials, American Jurisprudence Proof of Facts articles, and more
- Federal Aspects alerts you to any federal implications, and Treated Elsewhere statements list major exclusions that, while related, are treated in another Texas Jur 3d article

Texas Forms Legal and Business

Fingertip access to more than 6,500 court-tested forms for real property, consumer protection, leases, contracts, personal property, business enterprise assignments, estate planning, associations and nonprofit organizations, family and commercial code

A host of drafting aids include tax opportunities and pitfalls so you can take into account both Texas and federal tax aspects

Texas Jurisprudence Forms: Pleading and Practice

Comprehensive collection of more than 7,000 litigation-oriented practice forms based on Texas statutes, rules and caselaw for virtually all judicial and administrative proceedings

- Designed for courtroom use, integrating legal and form-drafting principles with coverage of Texas state and federal statutes, cases, regulations and Rules of Court
- Procedural Guide on filing periods, statutes of limitation, notice requirements and required parties
- Collateral Practice References to Texas Jur 3d, Am Jur® Proof of Facts, ALR® and law review articles

Continue to enjoy the many benefits of using Westlaw

West Key Number System

The West Key Number System® classifies American law into more than 400 topics – and 100,000 subtopics – accelerating your research by directing you to specific points of law

Case synopses and headnotes

West case synopses and headnotes put the facts, issues, procedural history, holdings and disposition of a decision in close proximity, aiding your word searching They also contain terms that may not have been used by the authoring judge, so you can retrieve relevant cases that an opinion-only search might miss

Plain-English searching

Enter a description of your issue in standard English Westlaw displays the documents that most closely match your concepts

Key Number searching

West attorney-editors assign a Key Number to every point of law based upon the concepts discussed within the case Using this Key Number information in searches substitutes highly precise terminology for often ambiguous language And finding just one case on-point leads directly to others – in any jurisdiction

KeyCite citation research service

KeyCite® is the easy-to-use, powerful citator that includes citations to more than 4 million reported cases, 20 million headnotes, and 1 million unpublished decisions Plus, citations to USCA®, CFR, statutes for all 50 states, 600 law reviews, ALR, Am Jur, Wright & Miller, administrative materials, jurisprudence and other sources *

* Linking may involve additional charges based on Westlaw plan inclusion Please check your plan for your specific charges

Westlaw.

Texas Analytical

Selected content blocks and databases

SELECTED CONTENT· TEXAS JURISPRUDENCE 3D

Administrative Law
Affidavits
Appellate Review
Arbitration and Award
Assault and Battery
Attorney General
Attorneys at Law
Automobiles
Banks
Business and Occupation Licenses
Civil and Military Defense
Civil Rights
Commercial Code
Compromise and Settlement
Constitutional Law
Contempt
Continuance
Contracts
Costs
Courts
Criminal Law
Damages
Deeds
Delinquent Children
Discovery and Depositions
Enforcement of Judgments
Estates
Evidence
Family Law
Frauds Statute of
Government Tort Liability
Injunctions
International Law
Judges
Judgments
Judicial Council
Jury
Liens
Notice
Pleading
Premises Liability
Process Notices and Subpoenas
Products Liability
Release
Statutes
Stipulations
Summary Judgment
Tort Liability
Trial
Trusts
Venue
Wills

TEXAS FORMS LEGAL AND BUSINESS ASSIGNMENTS

Notice
Rights and Interest

BUSINESS ENTERPRISES

Business Corporations
Buy-Sell Agreements
Buying and Selling a Business
Joint Ventures
Partnerships
Professional Associations and Corporations

COMMERCIAL CODE

Bank Deposits and Collections
Documents of Title
Fund Transfers
Investment Securities
Secured Transactions

CONSUMER PROTECTION

Consumer Warranties
Credit Reporting

CONTRACTS

Compromises, Settlements and Releases
Employment
Indemnity
Independent Contractors
Powers of Attorney
Rescission and Modification

ESTATE PLANNING

Trusts
Wills

FAMILY LAW

Husband and Wife
Minors
Unmarried Cohabitants

LEASES

Personal Property
Real Property

NONPROFIT ASSOCIATIONS AND CORPORATIONS

Social, Recreational and other Charities and Foundations

PERSONAL PROPERTY

Liens
Lost and Unclaimed Property

REAL PROPERTY

Condominiums and Timeshares
Conveyances
Easements, Licenses and Profits
Environmental Law
Liens
Options
Sales
Security Transactions

TEXAS JURISPRUDENCE PLEADING AND PRACTICE FORMS 2D

Abandoned, Lost and Unclaimed Property
Adoption
Affidavits, Oaths and Affirmations
Appeal and Error – Civil & Criminal Cases
Assault and Other Intentional Torts
Building and Construction Contracts
Building and Savings and Loan Association
Collection and Credit Agencies
Conservation and Pollution Laws
Constitutional Law
Counterclaim, Setoff and Cross-Claim
Courts
Criminal Procedure
Damages
Death
Depositions and Discovery
Dismissal, Discontinuance, Nonsuit
Drugs Narcotics and Poisons
Evidence and Witnesses
False and Wrongful Imprisonment
Fires
Government Tort Liability
Guaranty
Habeas Corpus
Health Care Facilities
Incompetent Persons
Indemnity
Injunctions
Intoxicating Beverages
Judgments
Labor and Labor Relations
Lis Pendens
Malicious Prosecution
Motions, Notices and Orders
Negligence
New Trial
Partnership
Pensions and Retirement Funds
Personal Injury Allegations
Premises Liability
Products Liability
Statute of Limitations
Taxpayer and Taxpayers' Actions
Trial
Venue
Workers Compensation

Visit west.thomson.com/westlaw/select

THOMSON REUTERS

To order or for more information, contact your West Representative at 1-800-762-5272.

Westlaw.

(c) 2008 Thomson Reuters L 315424/11 08

Westlaw.

Easy access to state and federal appellate briefs for cases originating in Texas.

Texas Appellate Court Briefs Plus is designed to meet your research needs Save the time and inconvenience of court-house trips, calls to the court clerk and long waits for document delivery once you've placed an order Obtain the briefs you want in a matter of seconds

WESTLAW ADVANTAGES

There are three core advantages that separate Westlaw® from other research services

- **Comprehensive legal content**, including primary law, legal analysis, and litigation materials
- **Tools to help you find it faster**, such as editorial enhancements, industry-leading search and linking technologies, 24/7 research assistance, and more
- **Trusted accuracy** through case corrections and KeyCite®, the most complete, accurate, up-to-the-minute citation service

And with WestlawNext,™ we built on these core advantages to make legal research easier and more intuitive than ever before

Level the playing field

Enhance your research and solidify your case with access to briefs written by leading experts

- Learn how other attorneys analyzed and argued the issues
- Study how opposing counsel argued the issues in prior cases
- Have a better understanding of arguments made in key precedents, so that you can better analogize and distinguish your case

Save hours of research time

It is quick and easy to retrieve briefs relevant to your research

- When looking at a case, simply click a link* to access related briefs
- Retrieve briefs by case title
- Search by legal issue
- Check a case citation in KeyCite to obtain a list of citing documents, including briefs

* Linking may involve additional charges based on Westlaw plan inclusion Please check your plan for your specific charges

Get appellate briefs from these courts

- Texas Supreme Court
- Texas Court of Appeals
- Texas Court of Criminal Appeals
- U S Supreme Court – full-text merit briefs (petitioners', respondents', supplemental and reply) and amicus briefs for cases in which certiorari has been granted or probable jurisdiction is noted and for which oral argument has been scheduled, 1930 to the present, selected earlier documents, petitions and supporting documents since 1964, and joint appendices since 1990
- U S Court of Appeals for the Fifth Circuit – selected briefs from 1972 to the present

Take advantage of Westlaw features

KeyCite Citing References

Quickly find discussions pertinent to your case

Westlaw Integration

Briefs link to supporting information and research features Just click to display cited cases, dockets, or other briefs You can also research Westlaw Profiler® information describing the experience and background of participating attorneys, judges, and expert witnesses

See reverse side for content listings

Appellate Court Briefs Plus

TEXAS

Westlaw content included

TEXAS

Texas Court of Appeals Briefs
Texas Court of Criminal Appeals Briefs and Petitions
Texas Family Law Briefs
Texas Supreme Court Briefs and Petitions

FEDERAL

U S Court of Appeals for the Fifth Circuit Briefs
U S Supreme Court Briefs
United States Supreme Court Criminal Briefs
United States Supreme Court Criminal Briefs and Petitions
United States Supreme Court Criminal Petitions
United States Supreme Court Joint Appendices
Petition for Writ of Certiorari to the U S Supreme Court

Some exclusions apply Additionally, certain content may be accessible only on Westlaw Content subject to change Contact your West Representative for plan details

Visit west.thomson.com/westlaw

To order or for more information, contact your West Representative at 1-800-762-5272.

THOMSON REUTERS

© 2010 Thomson Reuters L 341059/2 10

WestlawNext™

Quickly identify significant legal issues with in-depth analytical materials

Texas Criminal Secondary is the comprehensive legal resource that will help you at every stage of your criminal cases With Texas Criminal Secondary you have easy access to in-depth analytical materials, with tables of contents and practice guidance to help you quickly identify significant legal issues and facts – and build winning cases around them

The Texas Criminal Secondary content set offers you unlimited, fixed-rate access to

- Texas State Criminal Jury Instructions
- Jurisdictional and National Practice Guides
- Criminal Journals and Law Reviews
- Forms and Checklists
- News*
- And more

In step with your needs

Texas Criminal Secondary is one of our fixed-rate criminal law packages offering unlimited access to exactly the resources you need most in criminal practice – no more, no less

*News content not available for Patron Access plans

Save time. Save work. Find more.

Get unlimited, fixed-rate access to the secondary criminal law resources you use most You don't have to waste time searching multiple sources, and you can feel confident you have the law and information you need to prepare sound criminal cases

See reverse side for content listings

WestlawNext Advantages

WestlawNext™ builds on Westlaw's strengths to bring you the next evolution of legal research Now searches are even more intuitive and efficient, results are even more inclusive and relevant So you'll have confidence like never before that a simple word search delivers the documents you need

- **Dramatically improved search** with WestSearch™, the world's most advanced legal search engine A query of simple descriptive terms searches all Westlaw® content – no need to pick a database or use precise search terms – and displays the most relevant results first You can narrow results by document type, jurisdiction, date, and other criteria
- **Easier to use**, thanks to a clean, intuitive design with a customizable display and quick-read visual indicators that help you track your research
- **Organize more efficiently** by dragging and dropping documents into research folders, highlighting text, adding research notes, and more

Criminal Secondary

TEXAS

Select Westlaw content included

NATIONAL TREATISES AND PRACTICE GUIDES

Avoiding Reversible Error in Criminal Cases
Cammack and Garland s Advanced Criminal Procedure in a Nutshell
Champion
Closing Arguments 2d
Constitutional Rights of the Accused
Crime and Delinquency
Crime and Justice
Criminal Defense Ethics Law and Liability
Criminal Law Defenses
Criminal Practice Guides
Criminal Practice Manual
Criminal Procedure Checklists Fifth Amendment and Sixth Amendment
Criminal Procedure Handbook
Criminal Trial Techniques
Destruction of Evidence
Drug Testing Legal Manual
Everytrial Criminal Defense Resource Book
Examination of Witnesses
Eyewitness Identification Legal and Practical Problems
Federal Criminal Restitution
Federal Criminal Rules Handbook
Federal Grand Jury A Guide to Law and Practice
Federal Postconviction Remedies Handbook
Federal Practice and Procedure (Wright and Miller) – Criminal
Federal Probation
Federal Rules of Evidence
Federal Sentencing Law and Practice
Federal Trial Handbook Criminal, Fourth Edition
Feld's Juvenile Justice Administration in a Nutshell
Hate Crimes Law
Hermann s Mental Health and Disability Law in a Nutshell
Ineffective Assistance of Counsel
Israel and LaFave's Criminal Procedure – Constitutional Limitations in a Nutshell
Jury Selection The Law Art, and Science of Selecting a Jury
LaFave s Criminal Procedure
LaFave's Search and Seizure A Treatise on the Fourth Amendment
Law of Confessions
Law of Electronic Surveillance
Loewy's Criminal Law in a Nutshell
Manual on Recurring Problems in Criminal Trials
Military Criminal Law Evidence
Police Misconduct Law and Litigation
Postconviction Remedies
Professional Responsibility in Criminal Defense Practice
Prosecutorial Misconduct
Rights of Juveniles
Search Warrant Law Deskbook
Substantive Criminal Law
Trial Objections Handbook 2d
ULA Model Penal Code
Uncharged Misconduct Evidence
West Legal Directory – Criminal
Westlaw Topical Highlights – Criminal Justice
Wharton s Criminal Evidence
Wharton's Criminal Law
Winning Evidence Arguments

JURISDICTIONAL TREATISES AND PRACTICE GUIDES

Texas Criminal Jury Charges
Texas Practice Guide Criminal Practice and Procedure
Texas Practice Series Criminal Forms and Trial Manual
Texas Practice Series Criminal Litigation Combined
Texas Practice Series Criminal Practice and Procedure
Texas Practice Guide Evidence
Texas Practice Series Texas Criminal Law

FORMS, CHECKLISTS, AND CLAUSES

Am Jur Pleading and Practice Forms – Criminal
Complete Manual of Criminal Forms
Search and Seizure Checklists
West's McKinney's Forms – Criminal Procedure Law

JURY INSTRUCTIONS

Texas Criminal Jury Charges
Federal Jury Practice and Instructions – Criminal
Police Misconduct & Civil Rights Federal Jury Practice & Instructions

CURRENT AWARENESS

Arrest Law Bulletin
Computer Crime and Technology in Law Enforcement
Criminal Behavior and Mental Health
Criminal Justice Act Reports
Criminal Justice and Behavior
Criminal Justice Ethics
Criminal Justice News
Criminal Justice Review
Criminal Law Bulletin
Criminal Law Forum
Criminal Practice Report
Cybercrime Law Report
Department of Justice News Releases
Investigative Stops Law Bulletin
Justice Quarterly
Law Enforcement Employment Bulletin
Narcotics Law Bulletin
National Bulletin On Domestic Violence Prevention
Police Department Disciplinary Bulletin Prosecutor
Quinlan Law Enforcement Newsletters
Search and Seizure Bulletin

JOURNALS AND LAW REVIEWS

American Criminal Law Review
American Journal of Criminal Law
Berkeley Journal of Criminal Law
Capital Defense Journal
Corrections Compendium
Criminology and Public Policy
Journal of Criminal Justice
Journal of Criminal Law and Criminology
Journal of International Criminal Justice
Journal of Offender Rehabilitation
New Criminal Law Review
New England Journal on Criminal and Civil Confinement
Ohio State Journal of Criminal Law

Some exclusions apply Additionally, certain content may be accessible only on Westlaw Content subject to change Contact your West Representative for plan details

Visit WestlawNext.com

To order or for more information, contact your West Representative at 1-800-220-9378.

THOMSON REUTERS

© 2011 Thomson Reuters L 355395/6 11

Westlaw.

In step with your practice.

We designed Texas Employment Law Analytical around what you told us about what you do and what you need your workflow, your tasks, your need for strategic information

The result is a package that lets you enjoy unlimited, fixed-rate access to the Texas and national employment law analytical resources you use most

WESTLAW ADVANTAGES

There are three core advantages that separate Westlaw® from other research services

- **Comprehensive legal content**, including primary law, legal analysis, and litigation materials
- **Tools to help you find it faster**, such as editorial enhancements, industry-leading search and linking technologies, 24/7 research assistance, and more
- **Trusted accuracy** through case corrections and KeyCite®, the most complete, accurate, up-to-the-minute citation service

And with WestlawNext®, we built on these core advantages to make legal research easier and more intuitive than ever before

Texas Employment Law includes:

Corporate Counsel's Guide to

From antitrust issues to international law, the Corporate Counsel's Guide to set of materials provides practical guidance, sample agreements, forms, and checklists to help you answer and advise with confidence

Corporate Compliance Series

The Corporate Compliance Series is a total compliance library – covering 11 business areas – designed to help insulate a corporation against civil liability and criminal liability It will help compliance professionals to

- Prevent and detect any possible violations of law with step-by-step guidance for designing, implementing, and monitoring an effective compliance program
- Save valuable time with actual examples of communication checklists, questionnaires, "tickler" timetables, charts, sample program components, and policy statements
- Access critical data for a specific area of compliance, including components of a program, forms, and checklists

Forms and checklists

Easily search a comprehensive collection of state-specific and general forms, checklists, and clauses that will prove indispensable when drafting agreements from scratch, adding clauses to an existing contract, or double-checking that you did not miss a step in the process

Employment Law Practice Guides

Compensation and Benefits Guides

Save time and effort with these tried and true research tools:

West Key Number System

The West Key Number System® classifies American law into more than 400 topics – and more than 100,000 subtopics – accelerating your research by directing you to specific points of law

Case synopses and headnotes

West case synopses and headnotes put the facts, issues, procedural history, holdings and disposition of a decision in close proximity, aiding your word search They also contain terms that may not have been used by the authoring judge, so you can retrieve relevant cases that an opinion-only search might miss

KeyCite citation research service

KeyCite is the easy-to-use, powerful citator that includes citations to more than 4 million reported cases, 20 million headnotes, and 1 million unpublished decisions Plus, citations to USCA®, CFR, statutes for all 50 states, 600 law reviews, ALR®, Am Jur®, Wright & Miller, administrative materials, jurisprudence, and other sources

See reverse side for content listings

Texas Employment Law Analytical

Westlaw content included

CORE

Employment Law Forms and Checklists
Advising Small Businesses Forms
Checklists for Corporate Counsel
Employment Forms with Expert Analysis
Employment Law Forms – General
Employment Law Forms – National
Qualified Deferred Compensation Plans – Forms
West's Legal Forms Benefit Plans
West's Legal Forms Employment
West's Legal Forms Independent Contractors
West's Legal Forms Labor and Employment ADR
West's Legal Forms Retirement Plans

Employment Law Practice Guides and Law Journals
HR Series Compensation and Benefits
HR Series Fair Employment Practices
The Rutter Group Practice Guide
Federal Employment Litigation

Compensation and Benefits Guides
Benefits Guide
Compensation Guide
ERISA Practice and Procedure
Federal and State Guide to Employee Medical Leave, *Benefits, and Disabilities Laws*
Fringe and Welfare Benefit Plans
Nonqualified Deferred Compensation Plans
Qualified Deferred Compensation Plans
Qualified Retirement Plans
Welfare Benefits Guide Health Plans and Other Employer Sponsored Benefits

Corporate Counsel's Guide to
Alternative Dispute Resolution Techniques
Americans with Disabilities Act
COBRA
Employment Contracts
ERISA
Family and Medical Leave Act
Independent Contractors
Legal Aspects of Employee Handbooks and Policies
Nonqualified Deferred Compensation Agreements
Wage and Hour Laws

Corporate Compliance Series Titles
Designing a Drug-Free Workplace Program
Designing an Effective EEO Program
Designing an ERISA Compliance Program
Designing a Fair Hiring and Termination Program
Designing an OSHA Compliance Program
Designing a Records Retention Program
Employment Titles Combined

General Litigation and Compliance Guides
Americans with Disabilities Practice and Compliance Manual
Avoiding and Defending Wrongful Discharge Claims
Business Transactions Solution Employment
Defense of Equal Employment Claims
Disability Discrimination in Employment
Disability Discrimination in the Workplace
Disability Law Compliance Manual
Drug Testing Law, Technology, and Practice
Employee Privacy Law
Employment Discrimination and Civil Rights Actions in Federal Courts
Employment Discrimination Law and Litigation
Employment Law
Employment Practices Manual
Guide to Employee Handbooks
Guide to Employment Law and Regulation, 2d
H-1B Handbook
Immigration Employment Compliance Handbook
Immigration Procedures Handbook
Investigating Employee Conduct
Labor Certification Handbook
Litigating Age Discrimination Cases
Litigating Wrongful Discharge Claims
Newberg on Class Actions
Occupational Safety and Health Law
Pattern Discovery Employment Discrimination
Qualified Domestic Relations Orders
Sex-Based Employment Discrimination
State and Local Government Employment Liability
Statistics of Discrimination
Termination of Employment
Wage & Hour Law Compliance and Practice

Journals and Law Reviews
Texas Journals and Law Reviews

Specialized Materials
West Legal Directory – Texas

Some exclusions apply Additionally, certain content may be accessible only on Westlaw Content subject to change Contact your West Representative for plan details

Visit west.thomson.com/westlaw/practitioner

To order or for more information, contact your West Representative at 1-800-762-5272.

THOMSON REUTERS

© 2010 Thomson Reuters L 329564/2 10

Westlaw.

This new, exclusive bundle takes Texas statutory research to greater levels of speed and efficiency.

WESTLAW ADVANTAGES

There are three core advantages that separate Westlaw® from other research services

- **Comprehensive legal content**, including primary law, legal analysis, and litigation materials
- **Tools to help you find it faster**, such as editorial enhancements, industry-leading search and linking technologies, 24/7 research assistance, and more
- **Trusted accuracy** through case corrections and KeyCite®, the most complete, accurate, up-to-the-minute citation service

And with WestlawNext™, we built on these core advantages to make legal research easier and more intuitive than ever before

Faster, more thorough statute research is here

Now legal professionals have unlimited access to three essential Westlaw statutory research products Graphical Statutes® links you to the other two key content sets available in this Texas bundle – PastStat Locator® and Legislative History Separately, these three products have revolutionized the way legal professionals find and use statutes to build their legal strategies But together, they combine the full power of Westlaw to make one of the most complex areas of research easy

Graphical Statutes: understand the history of a statute, and track its changes

Graphical Statutes charts the legislative changes made to a Texas statute – and links you to related content * With a click, you can see all previous, current, and future versions, track pending changes, and connect to pertinent

- Legislative history materials
- Caselaw
- KeyCite history for the statute

Texas PastStat Locator

Statutes are continually amended, revised, and superseded Now you can instantly find the version of the statute that was in effect when your client's offense, injury, or other legal matter took place Simply click on the link from Graphical Statutes to find the version you need You can also access Texas PastStat Locator from the Texas statute by clicking on "Versions" from the Links tab (Coverage back to January 1, 2000)

Texas Legislative History

Link directly from a Texas code section to its legislative history Instantly Legislative History delivers key insights into the true legislative intent behind the words of the law that can help support your legal position Understanding the history of a law helps you to understand how to interpret it

This type of historical content was previously so difficult to find, it went unread, unseen, and unused Now one click from Graphical Statutes provides instant access to journals, reports, and bills in the Texas Legislative History Library

* Linking may involve additional charges based on Westlaw plan inclusion Please check your plan for your specific charges

Some exclusions apply Additionally, certain content may be accessible only on Westlaw Content subject to change Contact your West Representative for plan details

Visit west thomson.com/westlaw

To order or for more information, contact your West Representative at 1-800-762-5272.

THOMSON REUTERS

© 2010 Thomson Reuters L 332/7/2 10

Westlaw.

In step with your practice.

We have a targeted solution for your specific type of municipal law practice It's no surprise We designed Texas Municipal Law around what you told us you needed Your workflow, your tasks, your need for strategic information

The result is a practitioner-built resource that packages key municipal law content, makes it easy to access, and saves you time, every step of the way

WESTLAW ADVANTAGES

There are three core advantages that separate Westlaw® from other research services

- **Comprehensive legal content**, including primary law, legal analysis, and litigation materials
- **Tools to help you find it faster**, such as editorial enhancements, industry-leading search and linking technologies, 24/7 research assistance, and more
- **Trusted accuracy** through case corrections and KeyCite®, the most complete, accurate, up-to-the-minute citation service

And with WestlawNext,™ we built on these core advantages to make legal research easier and more intuitive than ever before

Texas Municipal Law includes:

Municipal codes

Matthews Municipal Ordinances is an indispensable starting point for developing new ordinances Search Matthews by table of contents Divided into text and formats, it provides all the necessary information to write ordinances, including a chapter on "Phraseology" and sample ordinances

Practice guides

Search the full text of 20 indexed, annotated volumes of McQuillin Law of Municipal Corporations to locate valuable information covering all aspects of municipal corporations

Forms and checklists

Using the convenient FormFinder template, easily search a comprehensive collection of state-specific and general forms, checklists, and clauses that will prove indispensable when drafting agreements from scratch, attempting to add an additional clause in an existing contract, or double-checking that you did not miss a step in the process

Save time and effort with these tried and true research tools:

West Key Number System

The West Key Number System® classifies American law into more than 400 topics – and more than 100,000 subtopics – accelerating your research by directing you to specific points of law

Case synopses and headnotes

West case synopses and headnotes put the facts, issues, procedural history, holdings and disposition of a decision in close proximity, aiding your word search They also contain terms that may not have been used by the authoring judge, so you can retrieve relevant cases that an opinion-only search might miss

KeyCite citation research service

KeyCite is the easy-to-use, powerful citator that includes citations to more than 4 million reported cases, 20 million headnotes, and 1 million unpublished decisions Plus, citations to USCA®, CFR, statutes for all 50 states, 600 law reviews, ALR®, Am Jur®, Wright & Miller, administrative materials, jurisprudence and other sources *

See reverse side for content listings

Texas Municipal Law

Westlaw content included

TEXAS MUNICIPAL MATERIALS
Texas Municipal Forms Clauses, and Checklists

MUNICIPAL PRACTICE GUIDES
ALR – Municipal
Am Jur – Municipal
Local Government Law
McQuillin Law of Municipal Corporations
McQuillin Law of Municipal Corporations
Land Use and Zoning Practice
Matthews Municipal Ordinances
Ordinance Law Annotations
Private Activity Bond Tests
State and Local Government Debt Financing

GENERAL PRACTICE GUIDES
Government Takings
Guide to Homeland Security

MUNICIPAL FORMS AND CHECKLISTS
Am Jur Legal Forms Municipal
Am Jur Legal Forms 2d Land Use and Zoning Practice
Am Jur Pleading and Practice Municipal
Am Jur Pleading and Practice Forms Annotated
Land Use and Zoning Practice
General Municipal Forms, Clauses, and Checklists
Municipal Legal Forms
Nichols Legal Forms Municipal

JOURNALS AND LAW REVIEWS
McQuillin Municipal Law Report
Zoning and Planning Law Report

LAND USE AND ZONING PRACTICE GUIDES
ALR Zoning
Am Jur 2d Land Use and Zoning Practice
American Land Planning Law
Anderson s American Law of Zoning
Federal Land Use Law & Litigation
Handling the Land Use Case Land Use Law, Practice and Forms
Local Regulation of Adult Businesses
Rathkopf's The Law of Zoning and Planning
State and Local Government Land Use Liability
Subdivision Law and Growth Management
Zoning and Planning Deskbook

Some exclusions apply Additionally certain content may be accessible only on Westlaw Content subject to change Contact your West Representative for plan details

Visit west.thomson.com/westlaw/practitioner

To order or for more information, contact your West Representative at 1-800-762-5272.

THOMSON REUTERS

© 2010 Thomson Reuters L 328640/2 10

Westlaw.

The how-to guide to Texas law, authored by and for Texas practitioners.

The Texas Practice Guide's coverage of essential Texas practice areas is a springboard into virtually any area of Texas law with direct links to Texas Jurisprudence 3d, West's® Texas Digest, Vernon's® Texas Statutes and Codes Annotated™ and South Western Reporter® 2d – West's entire Texas library*

WESTLAW ADVANTAGES

There are three core advantages that separate Westlaw® from other research services

- **Comprehensive legal content**, including primary law, legal analysis, and litigation materials
- **Tools to help you find it faster**, such as editorial enhancements, industry-leading search and linking technologies, 24/7 research assistance, and more
- **Trusted accuracy** through case corrections and KeyCite®, the most complete, accurate, up-to-the-minute citation service

And with WestlawNext,™ we built on these core advantages to make legal research easier and more intuitive than ever before

Trust the Texas Practice Guide for current, on-point coverage

The Texas Practice Guide was developed in response to the requests of attorneys like you And it was designed by experienced Texas attorneys with years of practice in the fields *they've written about*

The Texas Practice Guide cites only the leading and most recent caselaw On-point cites and analysis from several attorneys' *viewpoints give you a better understanding* of all relevant issues involved

Timesaving tools

The Texas Practice Guide incorporates timesaving features including

- **Scope Notes** that provide a summary description of each chapter's contents
- **Practice Tips** that are nested with related text to highlight the practical guidance they provide
- **Examples** to show you how to apply the law and rules to actual case scenarios
- **Checklists** that make sure every contingency is planned for
- **Forms** that aid in drafting and provide valuable, practice-oriented resources
- **Downloadable Files** that allow you to edit and print forms from your computer

Fully integrated research

With the Texas Practice Guide, you can jump instantly to case synopses, headnotes, Key Numbers, and annotated statutes This fully integrated research tool also includes extensive library cross-referencing and links to forms, digest topics, caselaw, codes, statutes and other analytical products within the set, as well as other Texas and national analytical texts, including ALR® and Am Jur® 2d

Continue to enjoy the many benefits of using Westlaw

West Key Number System

The West Key Number System® classifies American law into more than 400 topics – and more than 100,000 subtopics – accelerating your research by directing you to specific points of law

Case synopses and headnotes

West case synopses and headnotes put the facts, issues, procedural history, holdings, and disposition of a decision in close proximity, aiding your word search They also contain terms that may not have been used by the authoring judge, so you can retrieve relevant cases that an opinion-only search might miss

KeyCite citation research service

KeyCite is the easy-to-use, powerful citator that includes citations to more than 4 million reported cases, 20 million headnotes, and 1 million unpublished decisions Plus, citations to USCA®, CFR, statutes for all 50 states, 600 law reviews, ALR®, Am Jur®, Wright & Miller, administrative materials, jurisprudence, and other sources

See reverse side for content listings

* Linking may involve additional charges based on Westlaw plan inclusion Please check your plan for your specific charges

THOMSON REUTERS

Texas Practice Guide

Westlaw content included

Texas Practice Guide

Alternative Dispute Resolution
Business and Commercial Litigation
Business Entities
Business Transactions
Civil Appeals
Civil Pretrial
Civil Trial
Creditors Rights
Criminal Practice and Procedure
Discovery
Employment Practice
Evidence
Family Law
Financial Transactions
Insurance Litigation
Personal Injury 2d
Probate
Real Estate Litigation
Real Estate Transactions
Torts
Wills, Trusts, and Estate Planning

Some exclusions apply Additionally, certain content may be accessible only on Westlaw Content subject to change Contact your West Representative for plan details

Visit west.thomson.com/westlaw

To order or for more information, contact your West Representative at 1-800-762-5272.

THOMSON REUTERS

© 2010 Thomson Reuters L 315426/2 10

Westlaw.

Quick research and easy access to cited cases, Texas statutes and much more.

Texas Practice Series is an extensive collection of comprehensive titles This powerful collection gathers the insights of many of Texas's most knowledgeable attorneys, judges, and legal scholars

WESTLAW ADVANTAGES

There are three core advantages that separate Westlaw® from other research services

- **Comprehensive legal content**, including primary law, legal analysis, and litigation materials
- **Tools to help you find it faster**, such as editorial enhancements, industry-leading search and linking technologies, 24/7 research assistance, and more
- **Trusted accuracy** through case corrections and KeyCite®, the most complete, accurate, up-to-the-minute citation service

And with WestlawNext®, we built on these core advantages to make legal research easier and more intuitive than ever before

Provide sound counsel, even in unfamiliar areas of law

The speed and power of Westlaw helps you quickly pinpoint what well-known Texas legal experts have to say on any issue If you're researching in an unfamiliar area, you can quickly zero-in on

- Steps to take and checklists to follow
- Analysis of relevant decisions
- Texas statutes, rules and regulations
- Apparent discrepancies
- What you can learn from history
- What you can expect in the future

More ways to speed up your research

In addition to making your research more efficient with fast electronic searching you can also save time by

- Cutting and pasting analyses into briefs
- Jumping through hypertext links to cited Texas decisions – reported and unreported – Texas statutes, Texas administrative codes, federal cites including USCA®, CFR, the Supreme Court Reporter®, Federal Supplement® and more

Areas of Coverage

Research in familiar areas with speed and ease, or expand your practice with information and insight that covers the full scope of legal practice, including

- Business organizations
- County, special district and municipal law
- Consumer law
- Criminal practice
- Environmental law
- Evidence
- Family law
- Medical malpractice
- Methods of practice
- Real property
- Taxation
- Wills and Probate
- Workers' compensation

Westlaw content included

Texas Practice Series
Texas Practice Series Handbook on Texas Evidence
Texas Practice Series Rules of Evidence
Texas Practice Series County and Special District Law
Texas Practice Series Real Property
Texas Practice Series The Jury Charge for Texas Civil Litigation

Some exclusions apply Additionally certain content may be accessible only on Westlaw Content subject to change Contact your West Representative for plan details

Visit west.thomson.com/westlaw

To order or for more information, contact your West Representative at 1-800-762-5272.

THOMSON REUTERS

© 2010 Thomson Reuters L 315435/2 10

WESTLAW PRACTITIONER	Texas Real Property
	TEXAS

Westlaw.

In step with your practice.

We have a targeted solution for your specific type of real property law practice It's no surprise We designed Texas Real Property around what you told us you needed – your workflow, your tasks, your need for strategic information

The result is a practitioner-built resource that packages key real property content, makes it easy to access from a single screen, and saves you time, every step of the way

WESTLAW ADVANTAGES

There are three core advantages that separate Westlaw® from other research services

- **Comprehensive legal content**, including primary law, legal analysis, and litigation materials
- **Tools to help you find it faster**, such as editorial enhancements, industry-leading search and linking technologies, 24/7 research assistance, and more
- **Trusted accuracy** through case corrections and KeyCite®, the most complete, accurate, up-to-the-minute citation service

And with WestlawNext™, we built on these core advantages to make legal research easier and more intuitive than ever before

Texas Real Property includes:

Forms and Checklists

Easily search a comprehensive collection of state-specific and general forms and checklists that will prove indispensable when drafting an agreement from scratch, attempting to add an additional clause in an existing contract, or double-checking that you did not miss a step in the process

Practice Guides

Gain guidance from the experts in the field through treatises and CLE materials in specific subtopics of real property law

Save time and effort with these tried and true research tools:

West Key Number System

The West Key Number System® classifies American law into more than 400 topics – and more than 100,000 subtopics – accelerating your research by directing you to specific points of law

Case synopses and headnotes

West case synopses and headnotes put the facts, issues, procedural history, holdings and disposition of a decision in close proximity, aiding your word search They also contain terms that may not have been used by the authoring judge, so you can retrieve relevant cases that an opinion-only search might miss

KeyCite citation research service

KeyCite is the easy-to-use, powerful citator that includes citations to more than 4 million reported cases, 20 million headnotes, and 1 million unpublished decisions Plus, citations to USCA®, CFR, statutes for all 50 states, 600 law reviews, ALR®, Am Jur®, Wright & Miller, administrative materials, jurisprudence and other sources *

See reverse side for content listings

* Linking may involve additional charges based on Westlaw plan inclusion Please check your plan for your specific charges

THOMSON REUTERS

Texas Real Property

Westlaw content included

TEXAS AND GENERAL REAL PROPERTY FORMS

Texas and General Real Property Forms & Checklists
Stevenson s Texas Legal Practice Forms – Real Property
Texas Forms Legal and Business – Real Property
West Texas Forms – Real Property
Am Jur Legal Forms Real Property
Am Jur Legal Forms Land Use and Zoning
Commercial Real Estate Forms
Land Use Practice Forms
Nichols Legal Forms Real Property
Real Property Transactions with Expert Analysis
West Legal Forms Real Property

TEXAS AND GENERAL REAL PROPERTY PRACTICE GUIDES

Texas Construction Law Manual
Texas Jurisprudence – Real Property
Texas Practice Guide – Real Estate Litigation
Texas Practice Guide – Real Estate Transactions
Texas Practice Series – Real Property
NBI Real Property CLE Materials – Texas
ADA Public Accommodations and Housing
ALR Real Property
ALR Zoning
Am Jur Real Property
American Land Planning Law
Architects & Engineers
Commercial Real Estate Workouts
Construction and Development Financing
Construction Law (Bruner & O Connor)
Federal Regulation of Real Estate and Mortgage Lending
Housing and Development Reporter Handbook
Housing Discrimination Law and Litigation
Land Titles (Patton & Palomar)
Land Use and Zoning (McQuillin)
Land Use Practice and Forms
Law of Condominium Operations
Law of Distressed Real Estate
Law of Easements and Licenses
Law of Water Rights and Resources
Law of Wetlands Regulation
Law of Zoning & Planning (Rathkopf)
Managing Environmental Risk
Real Estate and Business Transactions
Neighboring Property Owners
Premises Liability
Real Estate Investments Trusts Handbook
Real Estate Transactions Structure and Analysis
Real Estate Transactions Tax Planning & Consequences
Real Property Transactions with Expert Analysis
Residential Real Estate Transactions
Restatement of the Law Real Property
Tax Aspects of Real Estate Investments
Title Insurance Law
Williston on Contracts Real Property
Zoning and Planning Deskbook

Some exclusions apply Additionally, certain content may *be accessible only on Westlaw Content subject to change*
Contact your West Representative for plan details

Visit west thomson.com/westlaw/practitioner

To order or for more information, contact your West Representative at 1-800-762-5272.

THOMSON REUTERS

© 2010 Thomson Reuters L 315436/2 10

Westlaw.

Comprehensive, current and linked to other trial documents.

Texas State Court Dockets is designed to simplify the way you locate and retrieve court dockets It gives you an efficient and cost-effective alternative for tracking, managing and monitoring your firm's cases as they make their way through the courts

Texas State Court Dockets also links to other important case filings, such as pleadings and motions * As a result, one search shows you the dockets as well as the underlying documents filed in the case

Combined searching makes your job even faster

Texas State Court Dockets coverage currently includes the Texas Supreme Court, appellate courts, and selected county courts West is continually adding jurisdictions Ask your Westlaw representative for the most up-to-date coverage

New Case Alerts will notify you of new cases filed – automatically

Another way Texas State Court Dockets makes your job easier is with the Alert function You can choose to be automatically alerted via email of new cases being filed that may be of interest This is a powerful client development tool – your firm's attorneys can select criteria that fit their practice and jurisdictions, then know instantly when a case fitting that profile is filed Earlier notification gives them a better shot at representing one of the parties

As current as the courts

Simply click the Update link and Texas State Court Dockets goes to the court and retrieves the most current version of the docket

Easy to use from the start

Texas State Court Dockets is so intuitive that even first-time users will find the docket they need instantly

Use Texas State Court Dockets to:

- Evaluate a judge's experience
- Research an opponent's prior trial strategies
- Investigate compelling legal arguments
- Identify and obtain court filings
- Evaluate expert witnesses, opposing counsel, and prospective clients

* Linking may involve additional charges based on Westlaw plan inclusion Please check your plan for your specific charges

See reverse side for content listings

WESTLAW ADVANTAGES

There are three core advantages that separate Westlaw™ from other research services

- **Comprehensive legal content**, including primary law, legal analysis, and litigation materials
- **Tools to help you find it faster**, such as editorial enhancements, industry-leading search and linking technologies, 24/7 research assistance, and more
- **Trusted accuracy** through case corrections and KeyCite®, the most complete, accurate, up-to-the-minute citation service

And with WestlawNext™, we built on these core advantages to make legal research easier and more intuitive than ever before

Texas State Court Dockets

Westlaw content included

Texas State Courts Combined
Texas Court of Appeal
Texas Court of Criminal Appeal
Texas Supreme Court
Bexar County Index
Collin County
Dallas County
Denton County Index
El Paso County
Gregg County Index
Harris County
Nueces County

Some exclusions apply Additionally, certain content may be accessible only on Westlaw Content subject to change Contact your West Representative for plan details

Visit west.thomson com/westlaw

To order or for more information, contact your West Representative at 1-800-762-5272.

THOMSON REUTERS

© 2010 Thomson Reuters L 321406/2 10

Westlaw.

Combines expert legal analysis with forms, jury instructions, and more.

This impressive collection of titles enables quick review of specific points in familiar areas of law and helps you cover unfamiliar ground with speed and ease

WESTLAW ADVANTAGES

There are three core advantages that separate Westlaw® from other research services

- **Comprehensive legal content**, including primary law, legal analysis, and litigation materials
- **Tools to help you find it faster**, *such as editorial* enhancements, industry-leading search and *linking technologies, 24/7 research assistance,* and more
- **Trusted accuracy** *through case corrections* and KeyCite®, the most complete, accurate, up-to-the-minute citation service

And with WestlawNext™, we built on these core *advantages to make legal research easier and* more intuitive than ever before

American Law Reports (ALR®)

A superior collection of annotations that evaluates all caselaw relevant to a specific *point of law Examines both sides of an issue, to help you anticipate your opponent's* arguments

American Jurisprudence 2d (Am Jur®)

Encyclopedic coverage of more than 400 topics Helps you gain a quick understanding of unfamiliar areas of law, so you can propose *a sound course of action*

Restatement of the Law

A chronological perspective of your specific *points of law, accepted in many courts as* persuasive authority Explains the current status of the law, and where it is likely to go in the future

Am Jur Pleading & Practice Forms Annotated

More than 36,500 forms covering every stage *of state and federal litigation*

Am Jur Proof of Facts

Winning case foundations and presentations with articles by experts well known in their fields add authoritative and decisive insights to the premise of your case

American Jurisprudence Trials

Articles showcasing successful strategies in actual cases Model Trial Articles covers the spectrum of personal injury, business, and criminal litigation

Causes of Action

Articles on virtually every type of civil action, with legal analysis to assess whether your *case or defense will hold up in court*

Wright & Miller Federal Practice and Procedure®

The definitive treatise on practicing law in the federal courts

West's® Federal Forms

Litigation-tested federal procedural forms, with accompanying commentary for use in civil and criminal litigation

Federal Procedure

A topically driven practice guide to federal, civil, criminal, and administrative procedure

Federal Procedural Forms

A compilation of practice-tested, up-to-date federal forms to accompany the Federal Procedure treatise

Handbook of Federal Evidence

Follows the Federal Rules of Evidence, and includes the full text of each rule and its legislative and committee history

Federal Jury Practice and Instructions

Background information, commentary, model/pattern instructions, and citations

Law Reviews and Journals

A collection of more than 600 of the most respected law reviews and bar journals

See reverse side for content listings

THOMSON REUTERS

All Analytical

Westlaw content included

AMERICAN LAW REPORTS

ALR 2d
State and Federal issues from 1948 to 1965
ALR 3d
State issues from 1965 to 1980
Federal issues from 1965 to 1969
ALR 4th
State issues from 1980 to 1991
ALR 5th
State issues from 1992 to 2004
ALR 6th
State issues from 2005 to present
ALR Federal
Federal issues beginning with 1969

AM JUR 2D

Contains more than 400 articles covering every topic of federal and state law pertinent to legal practice Topics are arranged alphabetically

AM JUR PLEADING & PRACTICE FORMS ANNOTATED

More than 6,500 forms covering
Notices
Complaints
Petitions
Declarations
Summonses
Motions
Replies
Answers
Counterclaims
Cross-complaints
Discovery forms
Affidavits
Stipulations
Subpoenas
Orders
Writs
Jury instructions
Findings of fact
Judgments
Bonds
Decrees
And more

AM JUR PROOF OF FACTS

Personal injury/tort litigation
Medical/hospital malpractice claims
Products liability claims
Attorney/other professional malpractice claims
Insurance coverage/bad faith litigation
Real estate litigation
Business torts
Commercial litigation
Trademark/copyright litigation

Each Proof of Facts article provides
Elements of proof checklists
Elements of damages checklists
Model discovery
Sample proofs
Legal background
Practice and evidentiary considerations
Technical background
Defense considerations
Artwork and illustrations
Bibliography

AM JUR TRIALS

Railroad accidents
Drunk driving defense – breath scores
Traumatic infant brain injuries
Wrongful death in police custody
Failure to properly diagnose/treat cancer
Daubert challenges to scientific evidence
Sexual harassment
Lender liability
Each article provides advice on
Interviewing clients
Managing a heavy caseload and staff assignments
Locating medical, scientific, and technical experts
Conducting more effective direct and cross examination
Composing opening statements and closing arguments

RESTATEMENT OF THE LAW

Agency
Conflict of laws
Contracts
Foreign relations law
Judgments
Property
Restitution
Suretyship and guaranty
Torts
Trusts
Unfair Competition

WRIGHT & MILLER FEDERAL PRACTICE AND PROCEDURE

The text fully analyzes.
The Federal Rules Civil, Criminal, Appellate, Evidence, and Supreme Court
Judicial procedure – related statutes
Jurisdiction, venue, removal, and ancillary matters
Controlling federal judicial constructions

WEST'S FEDERAL FORMS

Provides federal procedural forms, with accompanying commentary for use in handling civil and criminal cases in the various federal courts Forms are arranged according to type of proceeding and the court to which they pertain

FEDERAL PROCEDURE

Covers all levels of federal practice and procedure, including
Article III courts
Specialized courts
Administrative agencies

FEDERAL PROCEDURAL FORMS

Pleading forms for motions, complaints orders answers, cross-claims, interrogatories, and more
Expert guidance
References to USCA® CFR, and federal caselaw

CAUSES OF ACTION

Articles
Cross references
Related or alternative causes of action
Practice and procedure
Damages awards surveys
Practice checklists
Sample cases
Sample pleadings
Research guides
Practice guides
Tables of cases

HANDBOOK OF FEDERAL EVIDENCE

Full text of Rules of Evidence
Legislative history and committee notes
Author analysis of federal decisions

FEDERAL JURY PRACTICE AND INSTRUCTIONS

Federal Jury Practice
General Instructions for Federal Criminal Cases
Instructions for Particular Federal Criminal Cases
General Instructions for Federal Civil Cases
Instructions for Civil Diversity Cases
Instructions for Civil Actions Governed by Federal Law

LAW REVIEWS AND JOURNALS

Provides powerful, professional insight from more than 600 of the most respected law reviews and bar journals

Some exclusions apply Additionally, certain content may be accessible only on Westlaw Content subject to change Contact your West Representative for plan details

Visit west thomson.com/westlaw

To order or for more information, contact your West Representative at 1-800-762-5272.

© 2011 Thomson Reuters L 329672/3 11

Westlaw.

Find federal and state law in seconds, whenever you need it.

All Primary Law compiles hundreds of resources into a convenient package and lets you search as broadly or narrowly as you like

WESTLAW ADVANTAGES

There are three core advantages that separate Westlaw™ from other research services

- **Comprehensive legal content**, including primary law, legal analysis, and litigation materials
- **Tools to help you find it faster**, such as editorial enhancements, industry-leading search and linking technologies, 24/7 research assistance, and more
- **Trusted accuracy** through case corrections and KeyCite®, the most complete, accurate, up-to-the-minute citation service

And with WestlawNext™, we built on these core advantages to make legal research easier and more intuitive than ever before

A wider, clearer view of the law

Oftentimes, the answers you need are outside your home jurisdiction, or perhaps you simply want to broaden your legal horizon and follow developments elsewhere in the United States

All Primary Law brings distant jurisdictions to you, and helps you locate the law you need to get your job done

Coast-to-coast state coverage

The 50-state coverage includes

- Cases from state courts and federal courts within the state, with court rules and orders
- Annotated and unannotated statutes
- Attorney general opinions
- Administrative codes, registers, bulletins and other materials
- Municipal codes and charters (selected cities)

And numerous federal law resources

- Cases from the U S Supreme Court, courts of appeals, district courts and specialty courts
- United States Code Annotated®, unannotated statutes and uniform laws
- U S Code Congressional and Administrative News®
- Code of Federal Regulations
- Administrative decisions, bulletins and other materials
- Congressional testimony and political transcripts
- District of Columbia and U S territorial law

All the Westlaw advantages

All Primary Law makes your research easier, more accurate and more efficient Included with the state and federal law databases are tools such as

- KeyCite and KeyCite Alert – quick, up-to-date citation checking so you can be assured that your statute or case is still good law
- Streamlined statutory research – link immediately to expert analysis, practice guidance and forms
- West Key Number System® – the consistent, precise way to search across jurisdictional lines
- West's editorial enhancements – headnotes and case synopses, legislative history, references, tables, indexes and other timesaving information

See reverse side for content listings

All Primary Law

Westlaw content included

KEYCITE
For state and federal cases and statutes, Code of Federal Regulations and more

STATE CASELAW
State Cases
State and Federal Cases
State Headnotes
State Court Orders
State Court Rules

STATE STATUTES
State Statutes – Unannotated
State Statutes – Annotated
State Statutes – Annotated (annual)
State Statutes – General Index
State Statutes (topical)

STATE ADMINISTRATIVE MATERIALS
State Administrative Code Multibase
State Administrative Code
State Administrative Code – Index (selected states)
State Administrative Code (topical)
Attorney General Opinion Multibase
State Attorney General Opinions
State Administrative Registers (selected states)
State Bulletins (selected states)
Municipal Codes and Charters (selected cities)

FEDERAL CASELAW
U S Supreme Court Cases
U S Supreme Court Cases (before 1945)
U S Supreme Court Headnotes
U S Courts of Appeal Cases
U S Courts of Appeal Cases (before 1945)
U S Courts of Appeals Headnotes
U S Court of Appeal Cases (circuit)
U S District Courts Cases
U S District Courts Cases (before 1945)
U S District Courts Headnotes
U S District Courts Cases (circuit)
U S District Courts Unreported Cases
U S Specialty Courts Cases
U S Cases (topical)
Federal Orders
Federal Rules

FEDERAL STATUTES
Unites States Code
Unites States Code Annotated
Unites States Code Annotated – General Index
Unites States Code Annotated – Tables
Unites States Code Annotated (annual)
U S Code Congressional and Administrative News
U S Public Laws
U S Political Transcripts
U S Congressional Testimony
Uniform Laws Annotated
ULA Model Penal Code
Statutes (topical)
Statutes (individual)

FEDERAL ADMINISTRATIVE MATERIALS
Code of Federal Regulations
Code of Federal Regulations (annual)
Federal Acquisition Regulations
Administrative Decisions (topical)
Administrative Bulletins, Manuals and Other Materials (topical)
District of Columbia and Territorial Law
Westlaw Bulletin

Some exclusions apply Additionally, certain content may be accessible only on Westlaw Content subject to change Contact your West Representative for plan details

Visit west.thomson.com/westlaw

To order or for more information, contact your West Representative at 1-800-762-5272.

THOMSON REUTERS

© 2010 Thomson Reuters L 326561/2 10

Westlaw.

Value-test your civil cases against real-life outcomes.

By making it easy for you to examine jury verdicts, settlements and arbitration awards from around the country, Combined Jury Verdicts lets you quickly and accurately determine a client's potential award or liability

It also helps you negotiate successfully and/or build winning cases by allowing you to evaluate which legal arguments, pleadings and other trial filings have been successful or unsuccessful in similar cases

Content

Combined Jury Verdicts brings together state and federal jury verdict summaries, covering

- Type of case
- Jurisdiction
- Names of parties
- Attorneys and expert witnesses
- Key facts
- Award amounts

Respected Content Providers

Summaries found in Combined Jury Verdicts are provided by

- ALM® (Westlaw EXCLUSIVE!)
  - Westlaw is now the only major online legal research provider with the ALM VerdictSearch® jury verdict summaries
  - New state-specific multibases include ALM jury verdicts
  - No need to search ALM separately
- West
- LRP Publications
- JAS Publications
- Jury Verdicts Northwest
- Jury Verdicts Review Publications
- Trials Digest Publishing
- Law Bulletin Publishing
- Verdict Reporter
- Florida Legal Periodicals
- Kentucky Trial Court Review

National and state coverage begins in 1983, with coverage varying by source

How it helps

From case evaluation through investigation, negotiation and trial, Combined Jury Verdicts will help you

- Objectively evaluate potential cases and manage client expectations based on actual awards and settlements
- Determine credible settlement demand amounts and negotiate from a position of strength
- Locate and thoroughly evaluate expert witnesses
- Research judges and opposing attorneys
- Stay current with developing trends in litigation
- Link to trial documents for drafting examples, and find winning trial strategies and tactics
- Make well-informed case acceptance decisions
- Make well-informed try/settle decisions
- Limit potential bad-faith actions

See reverse side for content listings

WESTLAW ADVANTAGES

There are three core advantages that separate Westlaw® from other research services

- **Comprehensive legal content**, including primary law, legal analysis, and litigation materials
- **Tools to help you find it faster**, such as editorial enhancements, industry-leading search and linking technologies, 24/7 research assistance, and more
- **Trusted accuracy** through case corrections and KeyCite®, the most complete, accurate, up-to-the-minute citation service

And with WestlawNext™, we built on these core advantages to make legal research easier and more intuitive than ever before

Combined Jury Verdicts

Westlaw content included

STATE

Jury Verdicts Combined
Jury Verdicts – National
Combined Jury Verdicts and Settlements
[State] Jury Verdicts Combined
Examples Include
California Trials Digest
Florida Jury Verdicts Combined
Illinois Jury Verdicts Combined
New Jersey Jury Verdicts Combined
New York Jury Verdicts Combined
Ohio Jury Verdicts Combined
Pennsylvania Jury Verdicts Combined
Texas Jury Verdicts Combined

Jury Verdicts Plus
[State] Jury Verdicts Plus
Examples Include
California Jury Verdicts Plus
Florida Jury Verdicts Plus
Illinois Jury Verdicts Plus
New Jersey Jury Verdicts Plus
New York Jury Verdicts Plus
Ohio Jury Verdicts Plus
Pennsylvania Jury Verdicts Plus
Texas Jury Verdicts Plus

Jury Verdict and Settlement Summaries
Jury Verdict and Settlement Summaries – [State] (available for all 50 states and D C)
Examples Include
Jury Verdict and Settlement Summaries – California
Jury Verdict and Settlement Summaries – Florida
Jury Verdict and Settlement Summaries – Illinois
Jury Verdict and Settlement Summaries – New Jersey
Jury Verdict and Settlement Summaries – New York
Jury Verdict and Settlement Summaries – Ohio
Jury Verdict and Settlement Summaries – Pennsylvania
Jury Verdict and Settlement Summaries – Texas

West's Jury Verdicts – State Reports
West's Jury Verdicts – Arizona Reports
West's Jury Verdicts – Colorado Reports
West's Jury Verdicts – Connecticut Reports
West's Jury Verdicts – Georgia Reports
West s Jury Verdicts – Iowa Reports
West's Jury Verdicts – Illinois Reports
West's Jury Verdicts – Indiana Reports
West's Jury Verdicts – Kansas Reports
West s Jury Verdicts – Louisiana Reports
West s Jury Verdicts – Massachusetts Reports
West s Jury Verdicts – Maryland Reports
West's Jury Verdicts – Michigan Reports
West's Jury Verdicts – Minnesota Reports
West s Jury Verdicts – Missouri Reports
West's Jury Verdicts – Nevada Reports
West s Jury Verdicts – Ohio Reports
West's Jury Verdicts – Oklahoma Reports
West s Jury Verdicts – Texas Reports
West's Jury Verdicts – Virginia Reports
West s Jury Verdicts – Washington Reports
West s Jury Verdicts – Wisconsin Reports

Jury Verdicts (by Circuit)
Jury Verdicts – 1st Circuit
Jury Verdicts – 2nd Circuit
Jury Verdicts – 3rd Circuit
Jury Verdicts – 4th Circuit
Jury Verdicts – 5th Circuit
Jury Verdicts – 6th Circuit
Jury Verdicts – 7th Circuit
Jury Verdicts – 8th Circuit
Jury Verdicts – 9th Circuit
Jury Verdicts – 10th Circuit
Jury Verdicts – 11th Circuit

Jury Verdicts by State/Region
JAS Jury Verdicts and Settlements – Combined
Jury Verdicts Northwest
Alabama Jury Verdict Reporter
Alabama Civil Trial Reporter
Alaska Jury Verdicts Northwest
California Jury Verdicts All
Connecticut Jury Verdicts
District of Columbia Jury Verdicts
Florida Jury Verdict Reporter
Georgia Jury Verdicts
Idaho Jury Verdicts Northwest
Indiana Jury Verdict Reporter
Southwestern Illinois Jury Verdict Reporter
Kentucky Trial Court Review Jury Verdict Summaries
Massachusetts Jury Verdicts
Maryland Jury Verdicts
Michigan Jury Verdicts
Missouri Civil Reports
Ohio Jury Verdicts
Oregon Jury Verdicts Northwest
Rhode Island Jury Verdicts
Virginia Jury Verdicts
Washington Jury Verdicts Northwest
Wisconsin Circuit Court Jury Verdicts

Practice Areas
Employment Law Jury Verdicts
Personal Injury Jury Verdicts and Settlement Summaries

Reporting Service
Jury Verdict Reporting Service

Some exclusions apply Additionally, certain content may be accessible only on Westlaw Content subject to change Contact your West Representative for plan details

Visit west.thomson.com/westlaw

To order or for more information, contact your West Representative at 1-800-762-5272.

THOMSON REUTERS

© 2010 Thomson Reuters L 326332/2 10

WESTLAW
SELECT

Corpus Juris Secundum

America's first legal encyclopedia, Corpus Juris Secundum® (CJS®) is available online exclusively on Westlaw®

Generations of legal researchers have turned to it to begin research in unfamiliar areas of law and take a quick "refresher course" about recent changes in the law

A recognized authority nationwide

CJS has been cited by courts tens of thousands of times It contains articles on more than 400 legal topics covering the full range of American law state and federal, civil and criminal, substantive and procedural

The more than 400 legal topics are arranged alphabetically Each article lays out the broad principles of law and explains how the principles are applied by lawyers and the courts

It provides cutting-edge insights into the law nationally with

- Citations to a full range of state and federal authority
- Links to cited cases, statutes, regulations, the exclusive West Key Number System®, Restatements of the Law, and other relevant information
- Black Letter ' Summaries for a quick overview
- Topic and Scope Notes to shorten your research time
- KeyCite® integration for up-to-the-minute citation research
- Databases with CJS information about insurance, federal taxation, and patents

A foundational reference for your practice

Because it is so comprehensive and dependable, lawyers and judges turn to CJS again and again to

- Identify a legal problem
- Determine if there is the basis for a case
- Decide the most effective course for detailed research
- Provide on-the-spot answers to legal questions

Content blocks and databases

Corpus Juris Secundum	CJS
Corpus Juris Secundum Insurance	CJS-INS
Corpus Juris Secundum Internal Revenue	CJS-FTX
Corpus Juris Secundum Patents	CJS-PATENT

Visit west thomson.com/westlaw

To order or for more information, contact your West Representative, at 1-800-762-5272.

THOMSON REUTERS

Westlaw®

© 2008 Thomson Reuters L 327259/11 08

WESTLAW
SELECT

Westlaw FormFinder Advantage

Two databases working together to help you research and draft forms faster.

Drafting forms and contracts is an essential function of your role, whether you're involved in transactional work or litigation Westlaw® FormFinder Advantage combines Forms Library (database name FORMS-ALL), which gives you expert guidance and commentary to help you know which form to use and how to use it correctly, with FormFinder (database name FORMFINDER) which helps you find that form faster

Forms Library (FORMS-ALL) – For the research phase

Search Forms Library for commentary and other analytical materials that provide drafting suggestions and greater context of forms

- **400,000+ analytical documents relating to forms** – From more than 100 national, federal, and state-specific sources, including
  - *Am Jur® Legal Forms*
  - *Nichols Cyclopedia of Legal Forms Annotated*
  - *West's® McKinney's® Forms*
- **Commentary and practical advice** – Helps you select the appropriate document and adapt it to your specific situation
- **Drafting checklists** – Help demonstrate how a document package should be assembled
- **Links to additional authority*** – You're just a click away from relevant statutes, analysis, and other information that can guide you in drafting

FormFinder (FORMFINDER) – For the drafting phase

Once you know what form you need, FormFinder helps you find it fast so you can begin drafting

- **540,000+ actual forms** – FormFinder searches major national treatises and form sets, as well as state-specific and practice-area analytical titles, regulations, and codes/statutes** to help you quickly find
  - Text forms
  - Fillable PDF forms (e-forms)
  - Checklists
  - Clauses
- **Easy-to-use search template** – Makes finding the form you need quick and easy (see reverse side for details)
- **Indexed searching for pinpoint results** – We have indexed forms on Westlaw into 45 distinct categories (each with several of their own subcategories) to help narrow your search results and zero in on the form you need – even before you add search terms
- **Fast and simple access** – FormFinder is accessible from the top navigation bar on any Westlaw screen

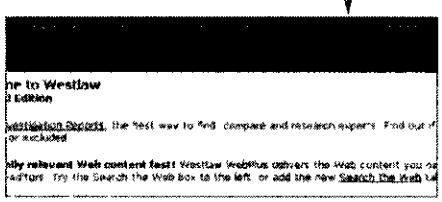

* Linking may involve additional charges based on Westlaw plan inclusion Please check your plan for your specific charges

** To see a complete list of FORMFINDER sources, go to west.thomson.com/formfinder

Westlaw.

Westlaw FormFinder Advantage

The FormFinder search template makes it easy to find your form faster.

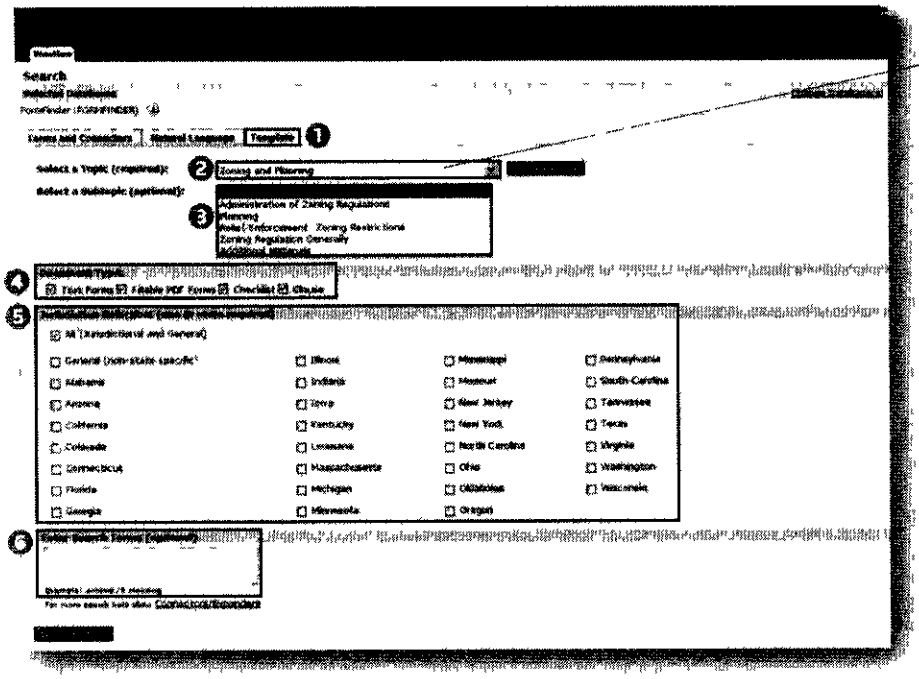

1. *Use the search template tab for the easiest, most efficient searching*
2. *Select a topic West has indexed forms into 45 topics*
3. *Select a subtopic (optional) Most topics offer 6-12 subtopics to help you narrow your search*
4. *Select the type of document(s) you'd like to search*
5. *Select your jurisdiction(s)*
6. *Narrow your search further by entering additional search terms (optional)*

***We have indexed Westlaw forms into the following 45 topics** (each with several subtopics)*

- Admiralty
- Arbitration
- Arts, Entertainment, Sports
- Banking and Finance
- Bankruptcy
- Business Organizations
- Civil Rights
- Commercial Law
- Construction Law
- Copyright
- Creditor-Debtor
- DUI/Misdemeanor Law
- Education Law
- Elder Law
- Employment Law
- Energy Law
- Environmental Law
- Estate Planning and Probate
- Ethics and Professional Responsibility
- Family Law
- Food, Drug and Safety
- Government Contracts
- Health
- Immigration Law
- Insurance Defense
- International Law
- Litigation – Civil Appellate Procedure
- Litigation – Civil Trial
- Litigation – Criminal Procedure (State vs Federal)
- Litigation – Federal Appellate Procedure
- Local Governments
- Medical Malpractice
- Patents
- Personal Injury
- Products Liability
- Public Utilities
- Real Estate
- Securities
- Social Security
- Taxation
- Telecommunications
- Trademarks, Trade Dress and Trade Names
- Transportation
- Workers' Compensation
- Zoning and Planning

THOMSON REUTERS

To see a complete list of FormFinder sources, please visit west.thomson.com/formfinder. Or call 1-800-REF-ATTY (1-800-733-2889).

Westlaw.

© 2009 Thomson Reuters L 353515/9-09

WestlawNext™

Taking Westlaw's core advantages to the next level.

An intuitive design and intelligent tools help you work smarter and faster, *plus* research that knows where you want to go

WestlawNext Advantages

WestlawNext™ builds on Westlaw's strengths to bring you the next evolution of legal research Now searches are even more intuitive and efficient, results are even more inclusive and relevant So you'll have confidence like never before that a simple word search delivers the documents you need

- **Dramatically improved search** with WestSearch™, the world's most advanced legal search engine A query of simple descriptive terms searches all Westlaw® content – no need to pick a database or use precise search terms – and displays the most relevant results first You can narrow results by document type, jurisdiction, date, and other criteria
- **Easier to use**, thanks to a clean, intuitive design with a customizable display and quick-read visual indicators that help you track your research
- **Organize more efficiently** by dragging and dropping documents into research folders, highlighting text, adding research notes, and more

The Next Evolution of Westlaw

What better way to create a new legal research solution than to start with what is already the industry's premier legal research service So we used Westlaw customer data and feedback to build on the core Westlaw advantages and create WestlawNext a more "you-centric" system that offers an easier, more efficient way to do legal research

Easier to Use

An inviting dashboard is the first sign your legal research is more like the way you think – and the way you work It's where complete answers don't require complex searches And where the tools to manage what you've found are built right into your workflow

Dramatically Improved Search

Powerful, exclusive WestSearch technology senses what you're looking for and intuitively connects other relevant content you may not have considered

Analyze and Organize More Efficiently

Quick access to relevant information helps you get more accomplished, more efficiently With research folders, you can tag and assign information as you go, so when your research is complete it's already organized You can also search 12 months of research history, highlight text for later reference, copy and paste with *Bluebook* citations, and add personal notes

More Relevant, Inclusive Search Results

Every WestlawNext search automatically leverages West's respected editorial analysis, Key Number taxonomy, and state-of-the-art search technologies to bring you more relevant, thorough results

- Your search is all-inclusive for your jurisdiction or topical practice area, there's no need to pick and choose databases if you don't want to
- You'll see the most relevant documents at the top of the list, with confidence you didn't miss important information
- Filter your results in seconds – Just fill in the blank or check a box to limit your results
- View results organized by content type – View the most relevant documents either in a combined list or sorted by content types Either way, you know your research is complete
- Get related on-point information – *Related Documents* is another way WestlawNext brings relevant information to you, instead of you having to search exhaustively It's the "best of the rest" from select primary and secondary sources

Giving You Total Research Confidence

By starting with the solid foundation provided by Westlaw's core advantages, then adding new, more efficient, intuitive ways to search and organize results, WestlawNext gives you confidence Confidence you've found the most relevant documents on your issue Confidence you didn't miss important information Confidence your research helps build a winning case

However you want to search, we meet you there

Easier searching enables you to enter your search however you wish, then choose a jurisdiction The system automatically recognizes the format of your query

Project Folders allow you to drag-and-drop key documents and text snippets into folders organized by issue, client, or topic, which puts all vital information in one place for quicker access later

View top results all together *or sorted by content type*

Westlaw

Can a municipality be held liable for civil

Federal

SEARCH

VIEW

Overview	1
Cases	524
Statutes	45
Regulations	98
Administrative Decisions & Guidance	100
Trial Court Orders	20
Secondary Sources	193
Briefs	259
Pleadings, Motions & Memoranda	727
Expert Testimony	100
Jury Verdicts & Settlements	100
Pending & Proposed Legislation	100
Pending & Proposed Regulations	100
All Results	4,366

NARROW

Search within results

Jurisdiction

Federal 524

Date

All

Cases (524)

1 20

Sort by Relevance

Select all items No items selected

Monell v Department of Social Services of City of New York

Supreme Court of the United States June 06 1978 436 U S 658 98 S Ct 2018
75-1914

Female employees of the Department of Social Services and the Board of Education of the City of New York brought an action challenging the policies of those bodies in requiring pregnant

A municipality cannot be held liable for violation of civil rights solely because employee is a tort-feasor a municipality cannot be held liable under the Civil Rights Act of 1871 on a respondeat superior theory 42 U S C A § 1983

In particular we conclude that a municipality cannot be held liable solely because it employs a tortfeasor or in other words a municipality cannot be held liable under § 1983 on a respondeat superior theory

From the foregoing discussion it is readily apparent that nothing said in debate on the Sherman amendment would have prevented holding a municipality liable under § 1 of the Civil Rights Act for its own violations of the Fourteenth Amendment

Alleged policy of a Department of Social Services and the Board of Education of the City of New York in requiring pregnant employees to take unpaid leaves of absence before those leaves are required for medical reasons involved official policy as the moving force of the alleged constitutional violation so that those bodies could be sued and held liable for the equitable relief of back pay under the Civil Rights Act of 1871 42 U S C A § 1983

City of Canton, Ohio v Harris

Supreme Court of the United States February 28, 1989 489 U S 379 109 S Ct 1197
86-1086

Detainee brought civil rights action against city, alleging violation of her right to

RELATED DOCUMENTS

Secondary Sources

What constitutes policy or custom for purposes of determining liability of local government unit under 42 U S.C.A § 1983—modern cases

81 A L.R Fed 549

The ALR databases are made current by the weekly addition of relevant new cases

American Law Reports ALR Federal

In order to hold a municipality liable for civil rights violations of its employees under § 1983, the municipality must have acted in accordance with a government policy or custom, whether made by its lawmakers or those whose edicts or acts may fairly be said to represent official policy.

LOCAL GOVERNMENT *LIABILITY UNDER SECTION* 1983

October 25-26, 2007

Litigation and Administrative Practice Course Handbook Series

Brown dealt with whether a municipality could be held liable on a single decision to hire when the hired employee violated the plaintiff s constitutional rights Lewis, on the other hand, did not even deal with direct municipal liability

Filter your results by key word, jurisdiction, type of action, law firm, judge, and more

Visual Indicators mark if you have opened a document (Already Viewed), saved it to a folder (Folder), or attached personal notes to it (Note) – so you know your research is done

Content , Pricing and Next Steps

July 1, 2012

Texas Select Core

Texas Primary Law

Texas Select Modules

Texas Analytical
Texas Appellate Court Briefs Plus
Texas Criminal Secondary
Texas Employment Law Analytical
Texas Graphical Statutes Bundle
Texas Municipal Law
Texas Practice Guide
Texas Practice Series
Texas Real Property
Texas State Court Dockets

National and Topical Modules

All Analytical
All Primary Law
Combined Jury Verdicts
Corpus Juris Secundum
FormFinder Advantage

Monthly Westlaw Banded/Base Rate	$13,033
Discount	45%
Total Westlaw Monthly Charges	**$7,168.15**

Multi-Year Westlaw Pricing Advantages

Monthly WestlawPRO charges for the second 12 months are not to increase by more than 3% over the charges for the previous 12 months

The third 12 months are not to increase by more than 3% over the charges for the previous 12 months

Non-availability of funds clause

If Subscriber fails to receive sufficient appropriation of funds or authorization for the expenditure of sufficient funds to provide for the continuation of this Agreement, or if a lawful order issued in or for any fiscal year during the Term of this Agreement and

the Order Form reduces the funds appropriated or authorized in such amounts as to preclude making the payments set out herein, this Agreement shall terminate on the date said funds are no longer available without any termination charges or other liability incurring to Subscriber Subscriber shall certify and warrant in writing that sufficient funds have not been appropriated or authorized to continue this Amendment, and provide West notice not less than thirty (30) days prior to the date of cancellation

Next Step

Thank you for taking the time to review this Westlaw proposal Upon agreeing to this information we can move forward with the necessary paperwork Please contact me with any questions you may have

This proposal is not a contract Proposal pricing is based on current attorney count and length of Westlaw contract
All orders are subject to approval by West Please refer to all applicable West agreements for terms and conditions

WEST ORDER FORM FOR *WESTPACK* PRODUCTS
610 Opperman Drive
St. Paul, MN 55164-1803
Tel: 651/687-8000

WEST.
A Thomson Reuters business

REQUIRED

Check West account status below as applicable: Rep Name & Number Randy Lysdale 0058144

New ____ (NACI Form attached) **Existing with Increase Credit Limit** ____ (NACI Form attached)

Existing with no changes X **Existing with changes** ____ (Permanent name change must attach a Customer Name Change Form)

Acct # 1000436400 PO # ____ Date 6/5/2012

Name/Subscriber Galveston County District Attorney Bill To Acct # ____

Order Confirmation Contact Name Bonnie Quiroga

E-Mail Bonnie.Quiroga@co.galveston.tx.us

Westlaw Password Contact Name (for password delivery) Bonnie Quiroga

E-Mail Bonnie.Quiroga@co galveston.tx.us

IF NEEDED

Permanent Address Change ____ **One-Time Ship To** ____ **Additional Ship To** ____ **Additional Bill To** ____

Name ____ Attn. ____

Address ____ Suite/Floor ____

City ____ State ____ County ____ Zip ____

WestPack WestlawPRO Products

WestPack Promotion Code: WPK3

Full Svc #	WestlawPRO Products	# of Passwords/ FTEs/Students/ Terminals/ Conc.Patron/CD Users	Monthly Banded/ Base Rate	Per User Rate	Other	Total Monthly WestlawPRO Charges
40988740	Government Select - Westlaw Next	85	$13,033		-45%	$7,168.15

Notes:

Total Monthly Charges $ 7,168.15

WestPack Print and CD-ROM Products

Full Svc #	WestPack Print and CD-ROM Products	-Quantity of WestPack Titles- New *	Existing **	List/CD-ROM Charges	Other	Total List/CD-ROM Charges
See Attached						

† Total Charges ____

† **Total Charges includes charges from attached page 2, if applicable.**

* This is a new title for Subscriber or Subscriber maintains an existing subscription to this WestPack title and desires additional copy(ies) – ship and enter subscription(s) for the requested title

** Subscriber maintains existing subscription(s) to this WestPack title do not ship

Monthly WestlawPRO Charges and CD-ROM Charges are billed on the date West processes Subscriber's order and continue for the minimum term of complete calendar months elected by Subscriber with his/her initials below ("Minimum Term"). Subscriber also agrees to maintain all subscriptions to the WestPack print products (new and/or existing as set forth above) during the Minimum Term and the charges for Subscriber's WestPack print products (both initial print charges ("Initial WestPack Charges") and print and CD-ROM subscription services charges including CD-ROM Charges ("WestPack Subscription Charges")) shall be billed as set forth herein Upon conclusion of the Minimum Term, CD-ROM Charges and WestPack Subscription Charges are billed thereafter at up to then-current rates. Any additional users added to any existing Per User WestlawPRO and/or CD-ROM product licensed by Subscriber from West shall be tied to the Minimum Term of the underlying Order Form for such product(s).

Subscriber's Initials for 12, 24 or 36 Month Minimum Term

____ **12 Month Minimum Term** for WestlawPRO, WestPack Print and CD-ROM Products – 20% WestPack Print and CD-ROM Product discount (new and existing)

____ **24 Month Minimum Term** for WestlawPRO, WestPack Print and CD-ROM Products – 30% WestPack Print and CD-ROM Product discount (new and existing) – Monthly WestlawPRO Charges for second 12 months not to increase by more than ___% over Monthly WestlawPRO Charges for initial 12 months

1) AW **36 Month Minimum Term** for WestlawPRO, WestPack Print and CD-ROM Products – 50% WestPack Print and CD-ROM Product discount (new and existing) Monthly WestlawPRO Charges for second 12 months not to increase by more than 3____% over Monthly WestlawPRO Charges for initial 12 months and Monthly WestlawPRO Charges for third 12 months not to increase by more than 3____% over Monthly WestlawPRO Charges for second 12 months.

Non-Government Subscribers Only: Upon conclusion of the WestlawPRO Minimum Term, the Subscriber Agreement and this Order Form will automatically renew for consecutive 12-month periods ("Renewal Term"), and the Monthly WestlawPRO Charges for the Renewal Term(s) will increase 7% per year unless either party gives written notice of cancellation to the other party at least 30 days in advance of any Renewal Term, including the first Renewal Term Additionally West may at its discretion provide Subscriber with notice at least 60 days in advance of any Renewal Term of a Monthly WestlawPRO Charge increase different from 7% after which Subscriber shall have 30 days to provide West with written notice of cancellation if Subscriber does not wish to renew Excluded Charges may be modified as set forth in the Subscriber Agreement (as defined herein) Subscriber is responsible for all Excluded Charges as incurred. During any Renewal Term, Subscriber's access to and use of Westlaw shall be governed by the Subscriber Agreement

Government Subscribers Only: Upon conclusion of the WestlawPRO Minimum Term, Monthly WestlawPRO Charges are billed thereafter at up to then-current rates. Excluded Charges and Monthly WestlawPRO Charges (after the Minimum Term) may be modified as set forth in the Subscriber Agreement (as defined herein). Subscriber is responsible for all Excluded Charges as incurred. After the Minimum Term, Subscriber's access to and use of Westlaw shall be governed by the Subscriber Agreement

3) AW **Subscriber's Initials.** Subscriber has 75___ attorneys (partners, shareholders, associates, contract or staff attorneys, of counsel and the like), corporate users or students and Personnel (if ordering a Paralegal Plan) for the location identified above or FTE's (if ordering Campus Research) for WestlawPRO, CD-ROM case law and/or West LegalEdcenter orders. If West learns that the actual number exceeds the number certified above, West reserves the right to increase Subscriber's charges as applicable

Internal Corporate Use Only		BND

Technical Contacts for Westlaw Patron Access and Campus Research and Thomson Innovation Administrator

Technical Contact Name (please print) _____

Telephone: _____

E-Mail Address. _____

Current Account #: _____

Patron Access. IP Address. _____
One IP Address per terminal Additional pages may be attached if needed.

Campus Research. IP Address Range _____

* Orders submitted without IP Address information may delay set up and access

____ Subscriber Initials ____ Terminals will be used for Patron Access (not required for Campus Research).

____ Subscriber Initials ____ Concurrent users will be used for Patron Access (not required for Campus Research).

In the event Subscriber desires to increase the number of publicly accessible terminals or concurrent users, Subscriber must contact West If West learns that Subscriber has increased the number of publicly accessible terminals, West reserves the right to increase Subscriber's charges as applicable.

For Internal Office Use Only
OF Instructions: Max Concu = # of terms/Eml to W1C/Blk Ancil/1 term = 5 atty = 1 pw/Tech cont = 59

Thomson Innovation Administrator Name (please print): _____

E-Mail Address: _____

	WestlawPRO Renewals *Current Monthly WestlawPRO Charges is/are rate(s) in effect as of the date of this Order Form and may not be the rate(s) in effect when rate(s) for the Renewal Term is/are calculated, depending on the length of the current Minimum Term or current Renewal Term	

Sub Mgtl #	WestlawPRO Products	Current Monthly WestlawPRO Charges*

Notes:

_____**Subscriber's Initials for 12 Month Renewal Term** ** Subscriber agrees to commit to an additional 12 months and the Monthly WestlawPRO Charges for the such additional 12 months shall be __ ___% more than *the Monthly WestlawPRO Charges in effect at the end of the current Minimum Term and/or current Renewal Term*

_____**Subscriber's Initials for 24 Month Renewal Term** ** Subscriber agrees to commit to an additional 24 months. The Monthly WestlawPRO Charges for the first additional 12 months shall be _____ % more than the Monthly WestlawPRO Charges in effect at the end of the current Minimum Term and/or current Renewal Term and the Monthly WestlawPRO Charges for the second additional 12 months shall be _ ____% more than the Monthly WestlawPRO Charges for the first additional 12 months.

_____**Subscriber's Initials for 36 Month Renewal Term** ** Subscriber agrees to commit to an additional 36 months. The Monthly WestlawPRO Charges for the first additional 12 months shall be ____% more than the Monthly WestlawPRO Charges in effect at the end of the current Minimum Term and/or current Renewal Term and the Monthly WestlawPRO Charges for the second additional 12 months shall be _____% more than the Monthly WestlawPRO Charges for the first additional 12 months. The Monthly WestlawPRO Charges for the third additional 12 months shall be ___ % more than the Monthly WestlawPRO Charges for the second additional 12 months.

In the event a promotion in the underlying *Order Form required Subscriber to maintain a subscription to certain West products in order to be eligible for such promotion* (Dependency Subscription(s)"), Subscriber must also maintain such Dependency Subscription(s) during the Renewal Term so that Subscriber may be eligible for the pricing set forth herein. In the event Subscriber terminates any of the Dependency Subscription(s) during the Renewal Term, any promotions and related discounts for the Dependency *Subscription(s) shall immediately terminate*

**Effective at the end of the current Minimum Term or current Renewal Term.

Non-Government Subscribers Only: Upon conclusion of the Renewal Term designated above, the Subscriber Agreement and this Order Form will automatically renew for consecutive 12-month periods, and the Monthly WestlawPRO Charges for the Renewal Term(s) will increase 7% per year unless either party gives written notice of cancellation to the other party at least 30 days in advance of any Renewal Term Additionally, West may at its discretion provide Subscriber with notice at least 60 days in advance of any Renewal Term of a Monthly WestlawPRO Charge increase different from 7% after which Subscriber shall have 30 days to provide West with written notice of cancellation if Subscriber does not wish to renew Excluded Charges may be modified as set forth in the Subscriber Agreement. Subscriber is responsible for all Excluded Charges as incurred. During any Renewal Term, Subscriber's access to and use of Westlaw shall be governed by the Subscriber Agreement.

Government Subscribers Only: Upon conclusion of the Renewal Term designated above, Monthly WestlawPRO Charges are billed thereafter at then current rates. Excluded Charges and Monthly WestlawPRO Charges (after the Renewal Term) may be modified as set forth in the Subscriber Agreement. Subscriber is responsible for all Excluded Charges as incurred During the Renewal Term and thereafter, Subscriber's access to and use of Westlaw shall be governed by the Subscriber Agreement.

	Westlaw Passwords and QuickView+	

Last Name	First Name, M.I.	Atty	Lib	Para	Other	Product(s)
See Attached						

Subscriber shall authorize which Westlaw password(s) shall have access to QuickView+ Actual charges billed by West may vary from charges reported on QuickView+ Subscriber shall pay charges as billed West does not warrant and has no liability with respect to the accuracy of charges or other information on QuickView+

Authorized Westlaw Password Holder for Westlaw QuickView+

Last Name _____ _____ **First Name** _____ **E-mail** _____

	Additional Non-WestPack WestlawPRO, CD-ROM and West LegalEdcenter Products					
Full Svc #	Non-WestPack WestlawPRO/ CD-ROM/WLEC Products	# of Pwds Conc. CD Users	Mo. Banded/ Base Rate	Per User/Conc. User Rate	Other	Total Monthly WestlawPRO/CD/ WLEC Charges

Notes:

Total Monthly Charges $ _____

Monthly WestlawPRO Charges, CD-ROM Charges and West LegalEdcenter Charges, are billed on the date West processes Subscriber's order and continue for a minimum of 12 complete calendar months ("Minimum Term") Upon conclusion of the Minimum Term, CD-ROM Charges are billed thereafter at then-current rates. If Subscriber elects a longer Minimum Term the Monthly WestlawPRO Charges and/or West LegalEdcenter Charges will be billed as set forth herein Any additional users added to any existing Per User WestlawPRO and/or CD-ROM product licensed by Subscriber from West shall be tied to the Minimum Term of the underlying Order Form for such product(s)

_____**Subscriber's Initials for 24 Month WestlawPRO and/or West LegalEdcenter Minimum Term** Subscriber agrees to commit to a Minimum Term of 24 months and *the Monthly WestlawPRO Charges and/or* West LegalEdcenter Charges for the second 12 months not to increase by more than _____% over the Monthly WestlawPRO Charges and/or West LegalEdcenter Charges for the initial 12 months.

_____***Subscriber's Initials for 36 Month WestlawPRO and/or West LegalEdcenter Minimum Term*** *Subscriber agrees to commit to a Minimum Term of 36 months and* the Monthly WestlawPRO Charges and/or West LegalEdcenter Charges for the second 12 months not to increase by more than _____ % over the Monthly WestlawPRO *Charges and/or West LegalEdcenter Charges for* the initial 12 months and the Monthly WestlawPRO Charges and/or West LegalEdcenter Charges for the third 12 months not to increase by more than _____% over the Monthly WestlawPRO Charges and/or West LegalEdcenter Charges for the second 12 months.

Non-Government Subscribers Only: Upon conclusion of the WestlawPRO Minimum Term, including West LegalEdcenter product(s) that are part of a WestlawPRO Select, the Subscriber Agreement and this Order Form will automatically renew for consecutive 12-month periods ("Renewal Term"), and the Monthly WestlawPRO Charges for the Renewal Term(s) will increase 7% per year unless either party gives written notice of cancellation to the other party at least 30 days in advance of any Renewal Term, including the first Renewal Term Additionally, West may at its discretion provide Subscriber with notice at least 60 days in advance of any Renewal Term of a Monthly WestlawPRO Charge increase different from 7% after which Subscriber shall have 30 days to provide West with written notice of cancellation if Subscriber does not wish to renew Excluded Charges may be modified as set forth in the Subscriber Agreement (as defined herein). Subscriber is responsible for all Excluded Charges as incurred. During any Renewal *Term, Subscriber's access to and use of Westlaw shall be governed by the Subscriber Agreement* Upon conclusion of the West LegalEdcenter Minimum Term, as applicable solely to West LegalEdcenter product(s) that are not part of a WestlawPRO Select, West LegalEdcenter Charges are billed thereafter at up to then-current rates

Government Subscribers Only: *Upon conclusion of the WestlawPRO and/or West LegalEdcenter Minimum Term, Monthly WestlawPRO Charges and/or West* LegalEdcenter Charges are billed thereafter at up to then-current rates. Excluded Charges and Monthly WestlawPRO Charges (after the Minimum Term) may be modified as set *forth in the Subscriber Agreement (as defined herein).* Subscriber is responsible for all Excluded Charges as incurred. After the Minimum Term Subscriber's access to and use of Westlaw shall be governed by the *Subscriber Agreement*

__ __ **Subscriber's Initials** Subscriber has ____ attorneys (partners, shareholders, associates, contract or staff attorneys, of counsel and the like), corporate users or students and Personnel (if ordering a Paralegal Plan) for the location identified above or FTE's (if ordering Campus Research) for WestlawPRO, CD-ROM case law and/or West LegalEdcenter orders If West learns that the actual number exceeds the number certified above, West reserves the right to increase Subscriber's charges as applicable.

_____ ***CD-ROM/DVD and/or West LegalEdcenter annual billing (please check if requested)***

West LegalEdcenter Online Features and Services:

____ **Subscriber's Initials** - Subscriber acknowledges that each user will receive an initial e-mail communication from West LegalEdcenter which includes important information about using the service (including username and password), as well as ongoing communication regarding new online programs available *in their practice area(s) and special announcements* Subscriber's users may opt out after the initial e-mail communication

Programs excluded from the Online CLE Pass shall be billed at then-current rates via credit card billing.

	Additional Non-WestPack Print Products				
Full Svc #	Non-WestPack Print Products	Quantity	List Charges	Other	Charges

Notes:

Total Charges $ _____

Terms of Payment for Print Products West's standard terms of payment for print products purchased are net 30 days. West may elect to accept installment payments on the purchase price Installment payment terms are $ _ _____ per month plus tax for approximately _____ months until the purchase price, plus any additional amounts under this Order Form, is paid in full

Subscription Service, Passwords and West km. Subscription service may consist of updates and/or supplements to the service, including but not limited to (a) CD-ROM Libraries' updated, replacement or supplemental CD-ROMs and online updates, and other related supplemental material, (b) Print Products pocket parts, pamphlets, replacement or ancillary volumes, loose-leaf pages and other related supplemental materials; all of which may be billed separately at then-current rates. Subscriber hereby requests that West provide subscription services for the herein-described products at then-current rates until such subscription services are cancelled by West or cancelled upon written request by Subscriber after the Minimum Term for WestPack print or CD-ROM products. Any passwords issued herein may only be used by the person to whom the password is issued and sharing of passwords is STRICTLY PROHIBITED Subscribers licensing only LiveNote/Case Notebook/Timeline/Pubisher Software will not be issued Westlaw passwords. Any West km software licensed hereunder must reside on a dedicated server provided and maintained by Subscriber at Subscriber's expense, and such server must be accessible to all Subscriber's authorized users. Subscriber's Westlaw Doc & Form Builder Data will be web hosted by West. Upon termination of any Westlaw Doc & Form Builder subscription, related Westlaw Doc & Form Builder Data of Subscriber that is stored on West servers will be destroyed within 180 days of such termination

General Provisions. This Order Form is subject to approval by West, a Thomson Reuters business ("West") in St Paul, Minnesota and is governed by Minnesota law. The state and federal courts sitting in Minnesota will have exclusive jurisdiction over any claim arising from or related to this agreement. Applicable sales, use, personal property, value added tax (VAT) or equivalent, ad valorem and other taxes are payable by Subscriber Subscriber may be charged interest for overdue installments and subscriptions and for other open account charges. If any installments, subscriptions, subscription services, Westlaw Charges or open account charges remain unpaid 30 days after becoming due, all unmatured installments, including all amounts that are or would become due and payable for the remaining term of Subscriber's Subscriber Agreement, shall become immediately due and payable at the sole option of West. Interest charges may be adjusted to the then-highest current rate allowable on Minnesota contracts. This Order Form is non-transferable. All collection fees, including but not limited to attorneys fees, are payable by Subscriber Transportation and handling (FOB origin) charges will be added for print products. West may request a current financial statement and/or obtain consumer credit report on the undersigned individual to determine creditworthiness West will only request consumer credit information on the undersigned if the undersigned is applying for credit as an individual or if the undersigned's consumer credit information is necessary for West to consider granting credit to the aforementioned company If Subscriber inquires whether a credit report was requested, West will provide information of such, if a report was received and the name, address and telephone number of the agency that supplied the report.

Returns. If Subscriber is not completely satisfied with any non-WestPack print or non-WestPack CD-ROM product received from West, the product may be returned within 45 days of the invoice date for a full refund or credit, in accordance with West's then-current returns policies Westlaw Charges and West LegalEdcenter Charges are not refundable.

	Online/CD-ROM Products to be Lapsed	
Full Svc #	Online/CD-ROM Products	# of Passwords
See Attached		

The Subscriber Agreement for Westlaw and CD-ROM Libraries, the applicable Schedule A price plan, (for WestlawPRO products and/or CD-ROM Libraries products), and/or the West LegalEdcenter Subscriber Agreement (for West LegalEdcenter products) and/or the Thomson Innovation Schedule and Third Party Terms Schedule (for Thomson Innovation) individually or jointly, as applicable, ("Subscriber Agreement") is/are hereby incorporated by reference and made part of this Order Form. In the event there is a conflict between the terms and conditions of the Subscriber Agreement and the terms and conditions of this Order Form, the terms and conditions of this Order Form shall control. Subscriber by his/her signature below, acknowledges his/her understanding and acceptance of the terms and conditions of the Subscriber Agreement.

3 Signature [signature] Date 8/21/12

AUTHORIZED REPRESENTATIVE FOR ORDER FORM

4 Printed Name Mark Henry

Title County Judge

Date August 21, 2012

Signature [signature]

For Credit Card Transactions only: Visa _____ Master Card _____ Am Ex _____

Card # _____ Expir. Date _____ Total Amt. to Charge _____

Material Description	Material Number	Sold-To Account
WESTLAW SELECT	40,583,989	1000435400
WESTLAW ALL ANALYTICAL LIB 2000	30,302,108	1000435400
WL PRO ALL STATE & FEDERAL BRIEFS	40,440,365	1000435400
WESTLAW ANALYTICAL LIBRARY - TX	30,303,444	1000435400
COMBINED JURY VERDICTS	40,561,725	1000435400
WESTLAWPRO CJS	40,155,529	1000435400
TX CRIMINAL SECONDARY	40,903,020	1000435400
TX EMPLOYMENT PRACTITIONER CORE	40,845,186	1000435400
FORMFINDER ADVANTAGE	40,837,487	1000435400
GOVERNMENT GC ALL PRIMARY LAW MODULE	40,443,517	1000435400
TEXAS GRAPHICAL STATUTES BUNDLE	40,640,912	1000435400
IMMIGRATION CORE	40,248,919	1000435400
MEDICAL LITIGATOR CORE	40,547,490	1000435400
TX MUNICIPAL PRACTITIONER CORE	40,456,889	1000435400
WL PRO REAL PROPERTY CORE - TX	40,360,323	1000435400
WL PRO REGULATIONS PLUS	40,454,961	1000435400
WESTLAWPRO TX PRACTICE	30,304,608	1000435400
WESTLAW TX PRACTICE GUIDE	30,303,451	1000435400
TX STATE CIVIL COURT DOCUMENTS	40,675,092	1000435400

Westlaw Government Select Modules Addendum
PROGRAM ID : CPRO

Date 6/5/2012

Account Name Galveston County District Attorney

Account Number 1000435400

Subscriber's Initials for Modules elected by Subscriber MR

Please enter the state designation for each applicable Core and State-Specific module specified

5

Core(s)

- [x] Westlaw Select State Core: ____
- [ ] Regulatory Core
- [ ] Federal Primary Core

State Specific Modules

- [ ] ____ Administrative
- [ ] ____ Appellate Court Briefs
- [ ] ____ Business Law
- [ ] ____ Civil Pleadings, Motions & Memoranda
- [ ] ____ Construction Law
- [x] TX Criminal Secondary
- [x] TX Employment Law
- [ ] ____ Environmental Law
- [ ] ____ Estate Planning
- [ ] ____ Family Law
- [ ] ____ Federal Materials
- [ ] ____ Legislative History
- [x] TX Municipal Law
- [ ] ____ Municipal Law Counselor
- [x] TX Real Property

National and Topical Modules

- [ ] 50 State Statutes Survey
- [ ] Advanced Employment Practice
- [ ] Advanced Managing Outside Counsel
- [x] All Analytical
- [ ] All Briefs
- [ ] All Federal Cases
- [ ] All News
- [x] All Primary Law
- [ ] All State Cases

National and Topical Modules (Continued)

- [ ] All State Primary Law
- [ ] American Jurisprudence (AMJUR)
- [ ] American Jurisprudence Legal Forms
- [ ] American Law Reports (ALR)
- [ ] Bill & Regulatory Tracking
- [ ] Case Evaluator
- [ ] Corporate Forms
- [x] Corpus Juris Secundum (CJS)
- [ ] Criminal and Arrest Records
- [ ] Employment Coordinator
- [ ] Federal Primary Law
- [ ] Forms Library (formerly All Forms)
- [ ] Graphical Statutes
- [ ] Law Reviews and Journals
- [ ] Legislative History-Federal & All State
- [ ] National Criminal Secondary
- [ ] National Public Records
- [ ] Norton Bankruptcy Law
- [ ] PastStat Locator
- [ ] People Map Comprehensive
- [ ] Real Property
- [ ] Real Property Construction
- [ ] RegulationsPlus
- [ ] US News
- [x] FormFinder Advantage
- [x] Combined Jury Verdicts
- [x] TX Briefs Plus
- [x] TX State Court Documents
- [x] TX Graphical Bundle
- [x] TX Practice Guide
- [x] TX Practice Series
- [x] TX Analytical
- [ ] ____
- [ ] ____
- [ ] ____
- [ ] ____

WEST.
A Thomson Reuters business

Government Accounts Only

Addendum to West Order Form for WestlawPRO Orders

Subscriber: Galveston County District Attorney

Account #: 1000435400

Date of Order Form: 6/5/2012

1 **Effect of Addendum**. The underlying Subscriber Agreement for Westlaw and CD-ROM Libraries, West Order Form and Schedule A Plan 2 WestlawPRO (collectively the "Subscriber Agreement"), between Subscriber and West is amended as specifically set forth herein to incorporate the terms of this Addendum. As amended, the Subscriber Agreement shall remain in full force and effect according to its terms and conditions. All terms used in this Addendum shall have the meanings attributed to them in the Subscriber Agreement. This Addendum supersedes any and all prior understandings and agreements, oral or written, relating to the subject matter. In the event there is a conflict between the terms and conditions of the Subscriber Agreement and the terms and conditions of this Addendum, the terms and conditions of this Addendum shall control.

2. **Modification of Order Form-Non Availability of Funds**. If Subscriber fails to receive sufficient appropriation of funds or authorization for the expenditure of sufficient funds to continue service under the Order Form, or if Subscriber receives a lawful order issued in or for any fiscal year during the Minimum Term or Renewal Term of the Order Form that reduces the funds appropriated or authorized in such amounts as to preclude making the payments set out therein, Subscriber may submit a written notice to West seeking cancellation of the service, the Subscriber Agreement and the Order Form, if permitted under applicable law. Subscriber shall provide West with notice not less than thirty (30) days prior to the date of cancellation, and shall include a written statement documenting the reason for cancellation, including the relevant statutory authority for cancelling, and an official document certifying the non-availability of funds (e.g., executive order, an officially printed budget or other official government communication). Upon West's receipt of a valid cancellation notice, Subscriber shall pay all charges incurred for any products and/or services received prior to the effective date of the cancellation (and in the case of print/CD-ROM products, return all unpaid print/CD-ROM products and updates).

West, a Thomson Reuters business	**Subscriber**
_____	Signed: _____
Accepted by: _____	Name (please print): Mark Henry
Title: _____	Title: County Judge
Date: _____	Date: August 21, 2012

(6)
*

AGENDA ITEM #28a3

Corrections Proposal

Galveston County Sheriff

Prepared by:
Randall Lysdale
3213 Sunrise Dr
Dallas, TX 75088
randy lysdale@thomsonreuters com

2011 Thomson Reuters 08 11

TABLE OF CONTENTS

Product Content 3

Confidentiality Statement

This proposal includes proprietary information that shall not be duplicated, used or disclosed outside of the organization—in whole or in part—for any purpose other than evaluating this proposal This information is deemed proprietary because it contains pricing and confidential corporate information that is of critical value to West in a highly competitive market

Why choose us for your facility's research needs?

Our company has been the preeminent publisher of legal information in the United States for over 140 years, providing legal materials to the legal and professional community Thomson Reuters publishes information in print and electronic formats, including more than 66 million books, over 500 CD-ROM libraries annually, and Westlaw, the leading online research service in the industry

Westlaw Correctional Facilities

Westlaw® Correctional Facilities is a secure online solution designed specifically for inmate use Inmates with no legal research training can find the information they need easily and quickly, thanks to no-password access, basic and advanced search templates, a list of the most commonly used databases, and numerous other features

Subscription Plans

Westlaw Correctional State Texas includes

- State Cases
- State Statutes
- State Court rules
- KeyCite, the leading citation research service
- Gilbert's Law Dictionary, which defines over 4,400 legal terms in straightforward, layperson's language, without sacrificing meaning or application

Ease of Use

Westlaw Correctional Facilities provides inmates with easy-to-use search templates that provide access to primary law and analytical resources on Westlaw The intuitive, straightforward interface requires no special knowledge or legal research expertise, making it easy to use while minimizing support staff costs

Westlaw Correctional Facilities incorporates help files that cover the following topics searching for documents, finding documents, finding statutes, and using KeyCite and KeySearch Additionally, quick reference guides are also available for Westlaw Correctional Facilities subscribers

Westlaw Security Features

Westlaw Correctional Facilities meets the security needs of correctional facilities with a two-layer security system The first layer is a redundant blocking technology that prevents inmates from accessing material that is not included in the Westlaw subscription plan selected by the facility This layer also prevents inmates from downloading, emailing, or printing via the Westlaw interface (Internet browser printing is permitted)

The second layer of security "locks down" the user interface While the traditional Westlaw interface has a myriad of options and features, all but the core research features have been stripped out of the Westlaw Correctional Facilities interface This limits the ability of inmates to enter commands or "hack" into other areas of Westlaw Inmates will not be able to access Westlaw databases outside of the correctional facility's subscription plan

In addition to the previously mentioned features, Customer Technical Support encrypts Westlaw Correctional Facilities passwords, which prevents inmates from accessing password information Use of Westlaw Correctional Facilities is provided at authorized terminals, adding an extra measure of data security and control (Correctional facilities are responsible for restricting access to other Internet sites Our Customer Technical Support team can recommend solutions to the correctional facility)

Westlaw System Requirements (Microsoft Windows)

Terminals that access Westlaw Correctional Facilities must have the following features installed

- Microsoft Windows 95 or later, or Windows NT with Microsoft Internet Explorer 4 01 or later, or Netscape 4 06 or later (Netscape 6 0 is not supported)

OR

Microsoft Windows XP with Microsoft Internet Explorer 6 or Netscape 6 1 or later

- 32 MB RAM
- Cookies enabled
- JavaScript enabled

- 640 x 480 or higher screen resolution (800 x 600 or higher resolution recommended)
- Internet access through a DSL or dedicated line

Westlaw Support and Training

Westlaw Correctional Facilities can be up and running on a correctional facility's terminals with no hassles or lengthy delays A customer technical support representative will assist with arranging Westlaw access from the correctional facility's terminals

Industry-leading customer service for Corrections administrators includes

- 24/7 content and technical support
- West Reference Attorney assistance
- Extensive Help files are available on Westlaw Correctional Facilities that aid the user in researching on Westlaw The following research help is provided Searching for Documents, Finding a Case, Finding a Statute, Using KeyCite, Browsing, and More!
- In addition, A free Westlaw Correctional Facilities how-to guide is downloadable at west thomson com/westlaw/guides

Westlaw Correctional Facilities
Westlaw Correctional State Texas

Next Steps
Thank you for taking the time to review this proposal Upon agreeing to this information we can move forward with the necessary paperwork Please contact me with any questions you may have

© 2011 Thomson Reuters. All rights reserved.
Republication or redistribution of Thomson Reuters content, including by framing or similar means, is prohibited without the prior written consent of Thomson Reuters. 'Thomson Reuters' and the Thomson Reuters logo are registered trademarks and trademarks of Thomson Reuters and its affiliated companies.

WEST ORDER FORM FOR *WESTPACK* PRODUCTS
FOR LAW ENFORCEMENT AGENCIES AND CORRECTIONAL FACILITIES ONLY
610 Opperman Drive
St. Paul, MN 55164-1803
Tel 651/687-8000

WEST
A Thomson Reuters business

REQUIRED

Check West account status below as applicable: Rep Name & Number Randy Lysdale 0058144

New X (NACI Form attached) **Existing with Increase Credit Limit** ____ (NACI Form attached)

Existing with no changes ____ **Existing with changes** ____ (Permanent name change must attach a Customer Name Change Form)

Acct # ____ PO # ____ Date 6/5/2012

Name/Subscriber Galveston County Sheriff Bill To Acct # ____

Order Confirmation Contact Name Bonnie Quiroga

E-Mail Bonnie.Quiroga@co galveston tx us

Westlaw Password Contact Name (for password delivery) Bonnie Quiroga

E-Mail Bonnie.Quiroga@co galveston tx us

IF NEEDED

Permanent Address Change ____ **One-Time Ship To** ____ **Additional Ship To** ____ **Additional Bill To** ____

Name ____ Attn: ____

Address ____ Suite/Floor ____

City ____ State ____ County ____ Zip ____

Subscriber Certifications (must be completed [illegible] order, including renewals)

Subscriber by his/her initials below certifies and acknowledges understanding and acceptance of the security limits of Westlaw and Premise or other West software (for CD-ROM/DVD or West Reporter DVD-Archival orders) and Subscriber's responsibility for controlling Internet and network access:

Subscriber's Initials. Functionality of Westlaw cannot and does not limit access to non-West Internet sites. It is the responsibility of Subscriber to control network access to the Internet or internal correctional sites By his/her initials, Subscriber acknowledges its understanding and acceptance of the security limits of Westlaw and Subscriber's responsibility for controlling Internet and network access.

Subscriber's Initials. Subscriber certifies that it shall be responsible for controlling network access to the Internet or internal Subscriber sites. Subscriber agrees to provide its own firewall, proxy servers or other security technologies as well as desktop security to limit access to the Westlaw URL and other West software (including CD-ROM/DVD or West Reporter DVD-Archival orders) Subscriber must design, configure and implement its own security configuration.

Subscriber's Initials. Subscriber shall not use any Data, and shall not distribute any Data to a third party for use, in a manner contrary to or in violation of any applicable federal, state, or local law, rule or regulation or in any manner inconsistent with the Subscriber Agreement.

Subscriber's Initials In the event Subscriber uses any West software to access CD-ROM/DVD-ROM products, Subscriber agrees to maintain the most current version of the West software for security purposes

Subscriber, by his/her initials below, certifies that the following is current and accurate and that Subscriber shall provide West with prompt written notice should the status of any of the following certifications change. West may restrict access to certain databases, Features or services at any time.

Westlaw (including access as a link from CD-ROM products) will be accessed by and/or Data provided to **(please initial only one)**

____ Non-inmates/administrative staff with no direct research results provided to inmates (including work product created as part of inmates' legal representation)

____ Internal access and/or inmate-requested research with access for employees only, for administrative or internal use as well as for research on behalf of or at the request of inmates, for example

- Employee conducts Westlaw research online and provides printed Westlaw documents to inmates.
- Employee conducts Westlaw research online and posts printed Westlaw documents in the prison
- Employee conducts Westlaw research online and makes printed Westlaw documents available for check-out from the inmate library

All such access use will fully comply with the following restrictions.

- In no event shall inmates be provided direct access to or control of the terminal
- Westlaw terminals will be located in a secured location that does not provide inmate access
- Access shall only be given to Subscriber employees
- No access shall be outsourced or otherwise provided to third parties.
- Subscriber shall be solely responsible for ensuring that no sensitive information is provided to inmates.

____ Direct access by inmates (including access for pro se legal representation) by third parties on behalf of inmates with results (print or electronic) delivered/provided to inmates, or by employees in circumstances where an inmate may have access to or control of the terminal

Subscribers that provide direct access to Westlaw must purchase/order the Westlaw Correctional Facilities Product and complete the following

Name of Technical Contact (please print) Bonnie Quiroga

Telephone (409) 770-5230

E-Mail Address Bonnie Quiroga@co galveston tx us

Current Account #:

IP Address:

One IP Address per terminal Additional pages may be attached if needed

IP Address Range

* Orders submitted without IP Address information may delay set up and access

Number of terminals which will be used for the Westlaw Correctional Facilities product 14

WestPack WestlawPRO Products

WestPack Promotion Code WPK3

Full Svc #	WestlawPRO Products	# of Passwords	Monthly Banded/ Base Rate	Per User Rate	Other	Total Monthly WestlawPRO Charges
40891962	TX Correctional State Plus	14 Terminals	$4,900		-75%	$1,225

Notes:

Total Monthly Charges $ 1,225

WestPack Print and CD-ROM Products

Full Svc #	WestPack Print and CD-ROM Products	-Quantity of WestPack Titles- New *	Existing **	List/CD-ROM Charges	Other	Total List/CD-ROM Charges
See Attached						

† Total Charges $

† **Total Charges includes charges from attached Additional WestPack Products Page, if applicable.**

* This is a new title for Subscriber or Subscriber maintains an existing subscription to this WestPack title and desires additional copy(ies) ship and enter subscription(s) for the requested title

** Subscriber maintains existing subscription(s) to this WestPack title – do not ship

Monthly WestlawPRO Charges and CD-ROM Charges are billed on the date West processes Subscriber's order and continue for the minimum term elected by Subscriber with his/her initials below ("Minimum Term") If Subscriber agrees to commit to a longer Minimum Term of 24 months or 36 months, any increases in Subscriber's Monthly WestlawPRO Charges will be billed as set forth herein Subscriber also agrees to maintain all subscriptions to the WestPack print products (new and/or existing as set forth above) during the Minimum Term and the charges for Subscriber's WestPack print products (both initial print charges ("Initial WestPack Charges") and print and CD-ROM subscription services charges including CD-ROM Charges ("WestPack Subscription Charges")) shall be billed as set forth herein. Upon conclusion of the Minimum Term Monthly WestlawPRO Charges, CD-ROM Charges and WestPack Subscription Charges are billed thereafter at up to then-current rates Excluded Charges and Monthly WestlawPRO Charges (after the Minimum Term) may be modified as set forth in the Subscriber Agreement (as defined herein) Subscriber is responsible for all Excluded Charges as incurred Any additional users added to any existing Per User WestlawPRO and/or CD-ROM product licensed by Subscriber from West shall be tied to the Minimum Term of the underlying Order Form for such product(s)

Subscriber's Initials for 12, 24 or 36 Month Minimum Term

____ **12 Month Minimum Term** for WestlawPRO, WestPack Print and CD-ROM Products – 20% WestPack Print and CD-ROM Product discount (new and existing)

____ **24 Month Minimum Term** for WestlawPRO, WestPack Print and CD-ROM Products – 30% WestPack Print and CD-ROM Product discount (new and existing) – Monthly WestlawPRO Charges for second 12 months not to increase by more than ____% over Monthly WestlawPRO Charges for initial 12 months

____ **36 Month Minimum Term** for WestlawPRO, WestPack Print and CD-ROM Products – 50% WestPack Print and CD-ROM Product discount (new and existing) – Monthly WestlawPRO Charges for second 12 months not to increase by more than 3 % over Monthly WestlawPRO Charges for initial 12 months and Monthly WestlawPRO Charges for third 12 months not to increase by more than 3 % over Monthly WestlawPRO Charges for second 12 months.

____ **Subscriber's Initials** _____ attorneys are employed by Subscriber at the location identified above If West learns that the actual number exceeds the number certified above, West reserves the right to increase Subscriber's charges as applicable

____ CD-ROM/DVD annual billing (please check if requested)

	WestlawPRO Renewals	

Sub Matl #	WestlawPRO Products	Current Monthly WestlawPRO Charges*

Notes:

_____**Subscriber's Initials for 12 Month Renewal Term** ** Subscriber agrees to commit to an additional 12 months and the Monthly WestlawPRO Charges for the such additional 12 months shall be ___% more than the Monthly WestlawPRO Charges in effect at the end of the current Minimum Term and/or current Renewal Term

_____**Subscriber's Initials for 24 Month Renewal Term** ** Subscriber agrees to commit to an additional 24 months. The Monthly WestlawPRO Charges for the first additional 12 months shall be _____% more than the Monthly WestlawPRO Charges in effect at the end of the current Minimum Term and/or current Renewal Term and the Monthly WestlawPRO Charges for the second additional 12 months shall be _ _ _% more than the Monthly WestlawPRO Charges for the first additional 12 months

_____**Subscriber's Initials for 36 Month Renewal Term** ** Subscriber agrees to commit to an additional 36 months The Monthly WestlawPRO Charges for the first additional 12 months shall be_____% more than the Monthly WestlawPRO Charges in effect at the end of the current Minimum Term and/or current Renewal Term and the Monthly WestlawPRO Charges for the second additional 12 months shall be _____% more than the Monthly WestlawPRO Charges for the first additional 12 months. The Monthly WestlawPRO Charges for the third additional 12 months shall be ____ _% more than the Monthly WestlawPRO Charges for the second additional 12 months.

In the event a promotion in the underlying Order Form required Subscriber to maintain a subscription to certain West products in order to be eligible for such promotion (Dependency Subscription(s)") Subscriber must also maintain such Dependency Subscription(s) during the Renewal Term so that Subscriber may be eligible for the pricing set forth herein In the event Subscriber terminates any of the Dependency Subscription(s) during the Renewal Term, any promotions and related discounts for the Dependency Subscription(s) shall immediately terminate

*Current Monthly WestlawPRO Charges is/are rate(s) in effect as of the date of this Order Form and may not be the rate(s) in effect when rate(s) for the Renewal Term is/are calculated, depending on the length of the current Minimum Term or current Renewal Term

**Effective at the end of the current Minimum Term or current Renewal Term Upon conclusion of the Renewal Term designated above, Monthly WestlawPRO Charges are billed thereafter at then current rates. Excluded Charges and Monthly WestlawPRO Charges (after the Renewal Term) may be modified as set forth in the Subscriber Agreement Subscriber is responsible for all Excluded Charges as incurred During the Renewal Term and thereafter, Subscriber s access to and use of Westlaw shall be governed by the Subscriber Agreement

	Westlaw Passwords and QuickView+	

Last Name	First Name, M.I.	Atty	Lib	Para	Other	Product(s)

Subscriber shall authorize which Westlaw password(s) shall have access to QuickView+ Actual charges billed by West may vary from charges reported on QuickView+ Subscriber shall pay charges as billed. West does not warrant and has no liability with respect to the accuracy of charges or other information on QuickView+

Authorized Westlaw Password Holder for Westlaw QuickView+

Last Name _____ **First Name** _____ **E-mail** _____

	Additional Non-WestPack WestlawPRO and CD-ROM Products	

Full Svc #	Non-WestPack WestlawPRO/ CD-ROM Products	# of Pwds Conc. CD Users	Mo. Banded/ Base Rate	Per User/Conc. User Rate	Other	Total Monthly WestlawPRO/CD Charges

Notes (including KeyCode):

Total Monthly Charges $ _____

Monthly WestlawPRO Charges and CD-ROM Charges, are billed on the date West processes Subscriber s order and continue for a 12 month Minimum Term Upon conclusion of the Minimum Term, CD-ROM Charges are billed thereafter at then-current rates If Subscriber elects a longer Minimum Term the Monthly WestlawPRO Charges will be billed as set forth herein Upon conclusion of the WestlawPRO Minimum Term Monthly WestlawPRO Charges are billed thereafter at up to then-current rates Excluded Charges and Monthly WestlawPRO Charges (after the Minimum Term) may be modified as set forth in the Subscriber Agreement (as defined herein) Subscriber is responsible for all Excluded Charges as incurred. Any additional users added to any existing Per User WestlawPRO and/or CD-ROM product licensed by Subscriber from West shall be tied to the Minimum Term of the underlying Order Form for such product(s)

_____ **Subscriber's Initials for 24 Month WestlawPRO Minimum Term** Subscriber agrees to commit to a Minimum Term of 24 months and the Monthly WestlawPRO Charges for the second 12 months not to increase by more than _____% over the Monthly WestlawPRO Charges for the initial 12 months

_____ **Subscriber's Initials for 36 Month WestlawPRO Minimum Term** Subscriber agrees to commit to a Minimum Term of 36 months and the Monthly WestlawPRO Charges for the second 12 months not to increase by more than _____% over the Monthly WestlawPRO Charges for the initial 12 months and the Monthly WestlawPRO Charges for the third 12 months not to increase by more than _____% over the Monthly WestlawPRO Charges for the second 12 months

_____ **Subscriber's Initials** _____ attorneys or users are employed by Subscriber at the location identified above (for WestlawPRO and/or CD-ROM case law orders)

_____ CD-ROM/DVD annual billing (please check if requested)

Additional Non-WestPack Print Products

Full Svc #	Non-WestPack Print Products	Quantity	List Charges	Other	Charges

Notes:

Total Charges $ _____

Terms of Payment for Print Products West's standard terms of payment for print products purchased are net 30 days
West may elect to accept installment payments on the purchase price Installment payment terms are $ _____ per month plus tax for approximately _____ months until the purchase price, plus any additional amounts under this Order Form is paid in full Interest is waived on all installments of 12 or 24 months

West's DVD Viewer and West's Reporter DVDs - Archival

Full Svc#	Products	Locations (up to #)	Users (up to #)	Qty	List Charges	Other	Charges
40647050 *	NRS PDF Viewer (with Westlaw access)						
40647551 **	NRS PDF Viewer (without Westlaw access)						

Notes: * **For non-correctional and non-law enforcement customers only**
** **For correctional and law enforcement customers only**

Total Charges $ _____

Terms of Payment for DVD Products. West's standard terms of payment for DVD products purchased are net 30 days. West may elect to accept installment payments on the purchase price Installment payment terms are $ _____ per month plus tax for approximately _____ months until the purchase price plus any additional amounts under this Order Form is paid in full

License Agreement for West's DVD Viewer and West's Reporter DVDs-Archival Products

1 **License.**

a. **Grant** West grants Licensee (also used as "Subscriber herein) a non-exclusive, nontransferable perpetual limited license to access and use West's DVD Viewer software and West's Reporter DVDs ("Product") in Licensee's normal course of business (including all currently installed versions and any updates), at its licensed site. A "site means all personal computers, servers or minicomputers (including networked systems) with the same operating system platform at a single location or at different locations which are connected by a single networked system (i e , any combination of two or more terminals that are electronically linked and capable of sharing the use of a single software product) The Product is protected by copyright.

b. **Copying** Licensee may install the Product at the licensed site consistent with the number of users and the number of locations for which the Product is licensed A "site" means all personal computers, servers or minicomputers (including networked systems) with the same operating system platform at a single location or applicable locations Each copy made by Licensee must include the copyright/proprietary rights notice(s) embedded in and affixed to the Product. All other copying is prohibited

c. **Other Restrictions.** Licensee may not copy download scrape, store, publish, transmit, retransmit, disseminate, broadcast, circulate sell, resell, or otherwise use the Product or any portion of the Product, in any form or by any means, except (i) as expressly permitted by this Agreement, (ii) with West's prior written permission, or (iii) if not otherwise expressly prohibited by this Agreement as allowed under the fair use provision of the Copyright Act (17 U S CA sec 107) Licensee may not loan lease distribute, or transfer the Product or copies to third parties, nor reverse engineer, decompile, disassemble or otherwise attempt to discern the source code of the components of the Product Further, Licensee may not reproduce all or any portion of the Product (except as expressly permitted in this Agreement) or modify, translate or otherwise create derivative works of the Product. Licensee agrees to notify its employees and agents who may have access to the Product of the restrictions contained in this Agreement and to ensure their compliance with these restrictions

2 **Title.** Licensee hereby acknowledges and agrees that all right, title and interest in and to the Product, the documentation and any other related materials are, and shall remain, vested solely in West and Licensee shall not hold itself out as having any ownership or other rights with respect thereto, except as specifically granted hereunder

3 **Limited Warranty** West warrants that the medium, if any, upon which the Product is provided by West to Licensee will be free from defects in material and workmanship under normal use for a period of sixty (60) days from the date of Licensee's receipt of the Product.

4 **DISCLAIMER AND LIMITATION OF LIABILITY EXCEPT AS EXPRESSLY STATED IN THIS AGREEMENT, THE PRODUCT AND ANY DOCUMENTATION ARE PROVIDED "AS IS" WITHOUT WARRANTY OF ANY KIND, EXPRESS OR IMPLIED, INCLUDING, BUT NOT LIMITED TO, WARRANTIES OF PERFORMANCE OR MERCHANTABILITY, FITNESS FOR A PARTICULAR PURPOSE, ACCURACY, OMISSIONS, COMPLETENESS, CURRENTNESS AND DELAYS. LICENSEE BEARS ALL RISK RELATING TO QUALITY AND PERFORMANCE OF THE PRODUCT THE PERFORMANCE OF THE PRODUCT VARIES WITH VARIOUS MANUFACTURERS' EQUIPMENT WITH WHICH IT IS USED. CERTAIN SOFTWARE USED BY LICENSEE MAY NOT BE CAPABLE OF SUPPORTING THE PRODUCT WEST DOES NOT WARRANT THE LEVEL OF PERFORMANCE OF THE PRODUCT OR THAT EARLIER VERSIONS SUPERSEDED BY NEW VERSIONS (WHETHER OR NOT DISTRIBUTED TO LICENSEE) WILL**

CONTINUE TO BE CAPABLE OF ACCESS AND USE. WEST DOES NOT WARRANT THAT THE PRODUCT OR THE FUNCTIONS CONTAINED IN THE PRODUCT WILL MEET LICENSEE'S REQUIREMENTS, OPERATE WITHOUT INTERRUPTION OR BE ERROR-FREE. LICENSEE ACKNOWLEDGES THAT PROVISION OF THE PRODUCT ENTAILS THE LIKELIHOOD OF SOME HUMAN AND MACHINE ERRORS, DELAYS, INTERRUPTIONS AND LOSSES, INCLUDING THE INADVERTENT LOSS OF DATA OR DAMAGE TO MEDIA. IN NO EVENT WILL WEST AND/OR ITS AFFILIATES BE LIABLE FOR ANY LOST PROFITS OR OTHER DAMAGES, INCLUDING DIRECT, INDIRECT, INCIDENTAL, EXEMPLARY, SPECIAL, CONSEQUENTIAL OR ANY OTHER TYPE OF DAMAGES, INCLUDING LICENSEE'S INABILITY OR FAILURE TO PERFORM LEGAL OR OTHER RESEARCH OR RELATED WORK OR TO PERFORM SUCH LEGAL OR OTHER RESEARCH OR WORK PROPERLY OR COMPLETELY, EVEN IF ASSISTED BY WEST, OR ANY DECISION MADE OR ACTION TAKEN BY LICENSEE IN RELIANCE UPON THE PRODUCT, ARISING OUT OF THIS AGREEMENT OR THE USE OF THE PRODUCT LICENSED HEREUNDER, EVEN IF WEST AND/OR ITS AFFILIATES HAVE BEEN ADVISED OF THE POSSIBILITY OF SUCH DAMAGES. LICENSEE'S EXCLUSIVE REMEDY AND WEST'S AND/OR IT AFFILIATES' ENTIRE LIABILITY UNDER THIS AGREEMENT, IF ANY, FOR ANY CLAIM(S) FOR DAMAGES RELATING TO THE PRODUCT WHICH ARE MADE AGAINST THEM, INDIVIDUALLY OR JOINTLY, WHETHER BASED IN CONTRACT OR NEGLIGENCE SHALL BE LIMITED TO THE AGGREGATE AMOUNT OF CHARGES PAID BY LICENSEE RELATIVE TO THE PRODUCT WHICH IS THE BASIS OF THE CLAIM(S) DURING THE 12-MONTH PERIOD PRECEDING THE EVENT GIVING RISE TO SUCH CLAIM.

5 **Term and Termination.** This Agreement will become effective on the date Licensee's order is processed and accepted by West. West or Licensee may terminate this Agreement immediately upon giving written notice of termination to the other party which commits a material breach of any obligation to under this License. If License is terminated all versions of the Product must immediately be removed from Licensee's sites and returned to West.

6 **Limitation of Claims.** Except for claims relating to improper use of the Product, no claim, regardless of form, which in any way arises out of this Agreement, may be brought more than one year after the basis for the claim becomes known to the party desiring to assert it.

7 **Force Majeure.** West shall not be liable for any delay or failure in performing hereunder if caused by factors beyond its reasonable control such as acts of God, acts of any government, war or other hostility, civil disorder the elements, fire, explosion, power failure, equipment failure, industrial or labor dispute, inability to obtain necessary supplies and the like.

8 **Export Laws.** The Product and its related documentation may not be exported or reexported in violation of the U.S. Foreign Corrupt Practices Act and its implementing regulations, the U.S. Export Administration Act and its implementing regulations or any other applicable laws, rules and regulations.

9 **U.S. Government Customers.** Use, duplication or disclosure by the Government is subject to restrictions set forth in subparagraphs (a) through (d) of the Commercial Computer-Restricted Rights clause at FAR 52.227-19 when applicable, or in subparagraph (c)(1)(ii) of the Rights in Technical Data and Computer Product clause in DFARS 252.227-7013, or in subdivision (c)(1) and (c)(2) of the Commercial Computer Product – Restricted Rights clause at 48 CFR 52.227-19, as applicable and in similar clauses in the NASA FAR Supplement.

Subscription Service, Passwords (for applicable products) and West km. Subscription service may consist of updates and/or supplements to the service, including but not limited to (a) CD-ROM Libraries updated, replacement or supplemental CD-ROMs and online updates, and other related supplemental material, (b) Print Products pocket parts, pamphlets, replacement or ancillary volumes loose-leaf pages and other related supplemental materials all of which may be billed separately at then-current rates. Subscriber hereby requests that West provide subscription services for the herein-described products at then-current rates until such subscription services are cancelled by West or cancelled upon written request by Subscriber after the Minimum Term for WestPack print or CD-ROM products. Any passwords issued hereunder may only be used by the person to whom the password is issued and sharing of passwords is STRICTLY PROHIBITED. Subscribers licensing only LiveNote/Case Notebook Software will not be issued Westlaw passwords. Paragraph 2 (d) of the Subscriber Agreement notwithstanding, Subscriber may also permit a third party to transfer the CD-ROM Data contained in the Library(ies) to a single storage drive under Subscriber's exclusive control. Any West km software licensed hereunder must reside on a dedicated server provided and maintained by Subscriber at Subscriber's expense, and such server must be accessible to all of Subscriber's authorized users. Subscriber's Westlaw Doc & Form Builder Data will be web hosted by West. Upon termination of any Westlaw Doc & Form Builder subscription related Westlaw Doc & Form Builder Data of Subscriber that is stored on West servers will be destroyed within 180 days of such termination.

General Provisions (for all products). This Order Form is subject to approval by West a Thomson Reuters business ("West") in St. Paul, Minnesota and is governed by Minnesota law. The state and federal courts sitting in Minnesota will have exclusive jurisdiction over any claim arising from or related to this agreement. Applicable sales, use, personal property, value added tax (VAT) or equivalent ad valorem and other taxes are payable by Subscriber. Subscriber may be charged interest for overdue installments and subscriptions and for other open account charges. If any installments, subscriptions, subscription services, Westlaw Charges or open account charges remain unpaid 30 days after becoming due, all unmatured installments including all amounts that are or would become due and payable for the remaining term of Subscriber's Subscriber Agreement, shall become immediately due and payable at the sole option of West. Interest charges may be adjusted to the then-highest current rate allowable on Minnesota contracts. This Order Form is non-transferable. All collection fees, including but not limited to attorneys fees, are payable by Subscriber. Transportation and handling charges (FOB origin) will be added for print products. West may request a current financial statement and/or obtain consumer credit report on the undersigned individual to determine creditworthiness. West will only request consumer credit information on the undersigned if the undersigned is applying for credit as an individual or if the undersigned's consumer credit information is necessary for West to consider granting credit to the aforementioned company. If Subscriber inquires whether a credit report was requested, West will provide information of such, if a report was received and the name, address and telephone number of the agency that supplied the report.

Returns. If Subscriber is not completely satisfied with any non-WestPack print, Non-WestPack CD-ROM or DVD product received from West, the product may be returned within 45 days of the invoice date for a full refund or credit, in accordance with West's then-current returns policies. Westlaw Charges are not refundable.

	Online/CD-ROM Products to be Lapsed	
Full Svc #	Online/CD-ROM Products	# of Passwords

The Subscriber Agreement for Westlaw and CD-ROM Libraries, the applicable Schedule A price plan, (for WestlawPRO products and/or CD-ROM Libraries products) individually or jointly, as applicable, ("Subscriber Agreement") is/are hereby incorporated by reference and made part of this Order Form. In the event there is a conflict between the terms and conditions of the Subscriber Agreement and the terms and conditions of this Order Form, the terms and conditions of this Order Form shall control. Subscriber by his/her signature below, acknowledges his/her understanding and acceptance of the terms and conditions of the Subscriber Agreement.

5) * Signature X Mark Henry Date 8/21/12

AUTHORIZED REPRESENTATIVE FOR ORDER FORM

6) * Printed Name Mark Henry
Title County Judge
Date August 21, 2012
Signature X Mark Henry

For Credit Card Transactions only: Visa _____ Master Card _____ Am Ex _____
Card # _____ Expir. Date _____ Total Amt. to Charge _____

For Internal Use Only:
CVM approval for Westlaw Correctional Facilities Order Form
Signature _____ Date _____
Printed Name _____ Title _____

WEST®
A Thomson Reuters business

Government Accounts Only

Addendum to West Order Form for WestlawPRO Orders

Subscriber: Galveston County Sheriff

Account #:

Date of Order Form: 6/5/2012

1 **Effect of Addendum**. The underlying Subscriber Agreement for Westlaw and CD-ROM Libraries, West Order Form and Schedule A Plan 2 WestlawPRO (collectively the "Subscriber Agreement"), between Subscriber and West is amended as specifically set forth herein to incorporate the terms of this Addendum. As amended, the Subscriber Agreement shall remain in full force and effect according to its terms and conditions. All terms used in this Addendum shall have the meanings attributed to them in the Subscriber Agreement This Addendum supersedes any and all prior understandings and agreements, oral or written, relating to the subject matter. In the event there is a conflict between the terms and conditions of the Subscriber Agreement and the terms and conditions of this Addendum, the terms and conditions of this Addendum shall control.

2. **Modification of Order Form-Non Availability of Funds**. If Subscriber fails to receive sufficient appropriation of funds or authorization for the expenditure of sufficient funds to continue service under the Order Form, or if Subscriber receives a lawful order issued in or for any fiscal year during the Minimum Term or Renewal Term of the Order Form that reduces the funds appropriated or authorized in such amounts as to preclude making the payments set out therein, Subscriber may submit a written notice to West seeking cancellation of the service, the Subscriber Agreement and the Order Form, if permitted under applicable law. Subscriber shall provide West with notice not less than thirty (30) days prior to the date of cancellation, and shall include a written statement documenting the reason for cancellation, including the relevant statutory authority for cancelling, and an official document certifying the non-availability of funds (e g., executive order, an officially printed budget or other official government communication). Upon West's receipt of a valid cancellation notice, Subscriber shall pay all charges incurred for any products and/or services received prior to the effective date of the cancellation (and in the case of print/CD-ROM products, return all unpaid print/CD-ROM products and updates).

West, a Thomson Reuters business	**Subscriber**
	Signed:
Accepted by	Name (please print): Mark Henry
Title:	Title: County Judge
Date:	Date: August 21, 2012

7 *

AGENDA ITEM #29a

GALVESTON COUNTY, TEXAS
COMMISSIONERS COURT
Contract Approval Request

Date of Request	8/21/12	**Department**	Juvenile Justice		
Renewal Contract	Yes	**Orgkey**	2230 256155	**Object Code**	5481000
Contract Start Date	8/1/2012	**Vendor**	Dickinson Independent School District		
Contract End Date	7/31/2012	**Vendor No**	043216	**Contract No**	N/A
Description	MOU and Interlocal Agreement for Juvenile Justice Alternative Education Program for 2012-2013				
Contract # Issued By Purchasing		CM12247	**Requested Legal Review**		Yes ____ No X

Fund Name	Fund #	FY12 $ Budget	FY12 $ Request	FY13 $ Request	FY14 $ Request	FY15 $ Request	FY15 $ Request
Juvenile Justice	See Above	107,200	102,455 27	102400			
Totals		107,200	102,455	102,400	-	-	-

Total Cost 102400

Approved By	Date	Signature
Department Head	Brent J Morris	8/14/12
Purchasing Agent	8-14-12	
County Legal.		

Contract listed in Budget Documentation (Yes/No)

County Budget Office

Form Number

Grady, Patricia

From. Watson, Glen
Sent. Tuesday, August 14, 2012 2 27 PM
To: Grady, Patricia
Subject: Contract Approval Request
Attachments. JJAEP Contract Approval Request PDF

The Contract Approval Request form for the Juvenile Justice Alternative Education Program MOU is attached

For FY12 this contract incurred cost of $102,455 27
Revenues from the state for JJAEP totaled $92,272

Hopefully I have included all the information that the Court needs to proceed Thanks again for your help with this
Please feel free to contact me if you have any questions or need additional information

-Glen

GALVESTON COUNTY
JUVENILE JUSTICE ALTERNATIVE EDUCATION PROGRAM
(GCJJAEP)
***
FUNDING PARAMETERS

FUNDING:

For the 2012-2013 school year, the Galveston County Juvenile Justice Center will educate students of County school districts who are mandatory expulsions or student placements pursuant to TEC 37 0081(g) and TEC 37 309 "Mandatory" expulsions are those students expelled for offenses described in Section 37.007 (a), (d), or (e) of the Texas Education Code (TEC) funded by the allocation to Galveston County from the State through the Texas Juvenile Justice Department (TJJD) for that purpose The entire cost of educating the mandatory expelled students shall be borne by Galveston County. Mandatory expelled students are counted as ineligible for attendance accounting in their home district

This Agreement consists of the Funding Parameters, the Interlocal Cooperation Agreement and Memorandum of Understanding for Juvenile Justice Alternative Education Program and all Addenda hereto

Additional Considerations

1. Any additional Average Daily Attendance (ADA) or other funding allotment that the Fiscal Agent District receives may be deducted from the overall cost in determining net cost.

2 Any grants obtained by any District or the GCJJAEP that may be used to lower expense shall be deducted from the overall cost in determining net cost to the County

3 Galveston County shall pay Galveston County Juvenile Justice Department personnel and provide the physical plant, breakfast and lunch and all other non-educational matters.

4 County shall pay Fiscal Agent District on the following basis

a One-half (50%) of the annual projected operating cost to be paid as a fixed-rate cost based on proposed instructional personnel All instructional personnel are and shall be employees of the Dickinson Independent School District Annual operating costs are limited to costs associated with instructional personnel Instructional personnel consists of salary and benefits for one certified teacher, 1/3 of a Special Education teacher, 1/3 of a clerical aid, 1/5 of district program administrator and 1/5 of district program secretary. This amount shall be paid annually after September 1st

b The balance of the annual operating costs, as defined in 4 a , shall be paid on the basis of actual operating costs for the year as invoiced in June by the Fiscal Agent District

5 The County has budgeted from its general budget fund certain amounts for paper and copies, arts and crafts, and materials and supplies for each program Instructional personnel shall comply with County's procurement procedures for the expenditures of these funds DISD may supplement these funds for materials and supplies in its discretion but will not be reimbursed by the County for supplemental expenses, if any, without express County approval

6. The T1 data circuit as provided by Galveston County through Southwestern Bell or other service provider at the juvenile facility will be billed to Dickinson ISD, paid by Dickinson ISD and reimbursed in full, as invoiced, by Galveston County to Dickinson ISD

7 If a student has been court ordered to attend the GCJJAEP the County will be responsible for funding such placements, providing the placement is identifiable as a mandatory placement and the student has been expelled

8 The GCJJAEP will provide services to students expelled to the GCJJAEP pursuant to TEC section 37 0081 (felony offense under Title 5, Penal Code) Each District shall reimburse Galveston County, who pays Galveston County Juvenile Justice Department personnel, funds the instructional personnel, provides the physical plant, and provides breakfast and lunch and all other matters in support of the GCJJAEP program for assigned students. Pursuant to 37 0081(g), the total reimbursement to Galveston County by the Districts shall be for the actual cost incurred each day for the student while the student is enrolled in the program Each District's reimbursement amount shall be determined by pro-rata participation of students expelled pursuant to TEC 37.007(a), (d), (e), TEC 37 0081 and TEC 37 309 Each applicable District will be invoiced their respective cost amount in October of each year, which shall be reimbursed back to the County

9. The GCJJAEP will provide services to students expelled to the GCJJAEP pursuant to TEC section 37 309 (removal of registered sex offenders), provided space is available Each District shall reimburse Galveston County, who pays Galveston County Juvenile Justice Department personnel, funds the instructional personnel, provides the physical plant, and provides breakfast and lunch and all other matters in support of the program for assigned students. The total reimbursement to Galveston County by the Districts shall be for the actual cost incurred each day for the student while the student is enrolled in the program Each District's reimbursement amount shall be determined by pro-rata participation of students expelled pursuant to TEC 37 007(a), (d), (e), TEC 37 0081 and TEC 37 309 Each applicable District will be invoiced their respective cost amount in October of each year, which shall be reimbursed back to the County

County of Galveston

State of Texas

INTERLOCAL COOPERATION AGREEMENT AND MEMORANDUM OF UNDERSTANDING FOR JUVENILE JUSTICE ALTERNATIVE EDUCATION PROGRAM

This Agreement is entered into by, between and among the COUNTY OF GALVESTON and each of the independent school districts participating in the Galveston County Juvenile Justice Alternative Education Program (GCJJAEP)

WHEREAS, the County of Galveston and the participating school districts are "local governments" and public education in the context contemplated herein is a "governmental function and service" as those terms are defined in the Interlocal Cooperation Act (Act), codified as Chapter 791 of the Government Code of Texas, and,

WHEREAS, the Act authorizes any local government to contract or agree with another local government in accordance with the Act to perform governmental functions and services that each party to the contract is authorized to perform individually, and,

WHEREAS, Section 37.011 of the Texas Education Code provides for the development of a "juvenile justice alternative education program" by the juvenile board of a county with a population greater than 125,000 and the Galveston County Juvenile Board initiated and maintains such a program with the agreement of the school districts subscribing hereto; and

WHEREAS, the Parties concur that the educational component of the GCJJAEP can be administered most efficiently at a centralized location within the geographic boundaries and educational jurisdiction of the Dickinson Independent School District The Parties desire to engage Dickinson Independent School District to serve as Fiscal Agent for Galveston County and each of the participating districts for the education of mandatory expelled students assigned to the GCJJAEP

NOW THEREFORE, pursuant to the Interlocal Cooperation Act and the Texas Education Code, it is mutually agreed by, between and among the Parties as follows

I OPERATING POLICY

1 01 The GCJJAEP shall be subject to a memorandum of understanding developed by the Galveston County Juvenile Board (Juvenile Board) in cooperation with the participating independent school districts and submitted to the Texas Juvenile Probation Commission (TJPC) for review and comment The terms and conditions of this Interlocal Cooperation Agreement shall become a part of such operating policy as if fully set forth in writing therein. No additions, deletions,

changes or variations to this Agreement as to fiscal matters or educational responsibilities shall be effective unless such amendment be in writing and formally agreed to by the appropriate officers of the Parties

II GOVERNANCE

2.01 The Dickinson Independent School District (Dickinson ISD) is designated as the situs of the campus of the GCJJAEP and shall provide administration of the educational aspects of the campus and serve as the Fiscal Agent for and each participating school district (District).

2.02 As Fiscal Agent for educational purposes, Dickinson ISD shall function as agent for and on behalf of all Districts Dickinson ISD shall administer the education program on a day-to-day basis in accordance with policies promulgated and/or adopted by the governing board of the GCJJAEP Where such policies are silent, the educational program shall be administered according to policies and procedures otherwise in effect within Dickinson ISD.

2.03 As Fiscal Agent, Dickinson ISD shall prepare the program application and budget, shall disburse program funds applicable to instructional personnel, shall be responsible for educational personnel serving the campus and program, shall maintain all educational records applicable to the program; shall correspond with assigned students' home districts with regard to status and ultimate disposition of each assigned student, and shall provide necessary curriculum and other such responsibilities normally associated with administration and provision of education services

2 04 The Governing Board of the GCJJAEP shall include

* Chairperson· The County Judge of Galveston County shall serve as chairperson for the GCJJAEP Governing Board The chairperson shall be entitled to vote on any tie vote.

* Members (each with one vote)
  1 Director of Juvenile Services for Galveston County (or designee);
  2 Two (2) Juvenile Judges as named by the Juvenile Board,
  3 One (1) designee of school district serving as fiscal agent,
  4 One (1) designee of Galveston County Commissioners' Court, and
  5 Three (3) school district representatives of school districts in Galveston County (Superintendent or designee) as named by Galveston County Superintendent group

2 05 The Governing Board of the GCJJAEP shall meet on the basis of called meetings as deemed appropriate by the Galveston County Judge in order to monitor and adjust the program Such meetings shall be held at least annually A minimum of 4 members shall be required to establish a quorum for such meetings

2 06 The Superintendent of each District shall serve as the representative of their respective District on those considerations requiring revision in policy or practice

III. FINANCIAL OBLIGATIONS

3 01 The expenses of this program shall be covered pursuant to the Funding Parameters on pages 1 and 2 of this Agreement

3 02 Nothing herein shall burden the Fiscal Agent, Galveston County, or any District with the added expense necessary to address or accommodate any particular needs of special education students The Fiscal Agent and the home district will work together to provide necessary and appropriate special education services on a case-by-case basis as the need arises, but all additional expense and liability shall be borne and/or reimbursed by the responsible school district, which shall hold the Fiscal Agent harmless for such services If additional special education services are needed to serve students from more than one participating school district, the cost of the service will be shared by the applicable participating districts All parties shall endeavor to comply with each special education student's current Individual Education Plan ("IEP") and facilitate convening IEP meetings

3 03 Nothing herein shall burden the Fiscal Agent or any District with responsibility for underwriting or providing services or accommodating student placements beyond the scope of the program described in this Agreement. This program must be submitted to the TJPC for approval pursuant to Section 37.011 of the TEC, but should additional obligations be deemed required of Galveston County and/or the Juvenile Board for this program to fully qualify under the statute, the Parties to this cooperative program are under no contractual duty to share such additional obligations or to expand the program during the school year without mutual consent

IV BUDGETING

4 01 As Fiscal Agent, Dickinson ISD shall prepare a budget of operational costs for instructional personnel anticipated for full usage of the GCJJAEP during the coming year Such budget shall include, without limitation, fringe benefits for its professional employees assigned in whole or in part to the program, commensurate with the fringe benefits enjoyed by comparable professional employees of Dickinson ISD

4 02 The Parties concur that no fewer than one certified full time regular education teacher and one part time certified special education teacher shall be necessary and advisable for the program's classroom instruction Total program instructional personnel costs consisting of salary and benefits for one certified teacher, 1/3 of a Special Education teacher, 1/3 of a clerical aid, 1/5 of a district program administrator and 1/5 of a district program secretary shall be included in

the educational services budget Pupil teacher ratios are to be maintained between 8 to 1 and 15 to 1

4 03 The budget may be amended with concurrence of the Districts and the GCJJAEP Governing Board if needs change during the year Nothing herein nor in any juvenile court order shall require the Fiscal Agent or GCJJAEP Governing Board to amend its budget involuntarily, nor to incur added expense without means of reimbursement

V ACCOUNTABILITY/ATTENDANCE

5 01 For purpose of accountability under Chapter 39 of the TEC and the Foundation School Program, a student enrolled in the GCJJAEP shall be reported as if the student was enrolled at the student's home campus in the student's regularly assigned education program, including a special education program, where applicable The home district of each such student shall cooperate fully in making such reports and accepting such accountability All PEIMS reporting requirements for the students placed in the program shall remain the responsibility of the home district Students expelled as "mandatory" placements shall be counted as "ineligible" for attendance counting purposes in the home district

5.02 Expelled students placed in the program are expected to attend as required by compulsory attendance law, pursuant to section 25 085 of the TEC Pursuant to TEC Section 25 093, the attendance officer of the sending District shall file a complaint against the parent(s) in the justice of the peace court or municipal court of the political subdivision in which the parent resides or in which the school is located if the parent fails to require the child to attend school as required by law In accordance with section 37.011(h) of the TEC, students assigned to the GCJJAEP on the basis of expulsions under Section 37.007(a), (d), or (e) of the TEC are funded to Galveston County by the TJ PC and are ineligible for ADA accounting in the home District

5 03 Mandatory expelled students who are on juvenile probation and violate the compulsory attendance law will be handled through the Galveston County Juvenile Justice Department (Juvenile Justice Department) On the third consecutive day of absence from the GCJJAEP, the Juvenile Justice Department's Director of Juvenile Services (Director) or the Director's designee shall notify the sending District's Superintendent or the Superintendent's designee of the student's absence from the program In accordance with 37 T A C Section 348 7(g), student on inactive status for 30 consecutive school days shall be withdrawn from the GCJJAEP immediately following expiration of the 30th consecutive school day

5 04 A student who has been erroneously assigned to the GCJJAEP because their expulsion meets "discretionary" expulsion qualifications, not "mandatory", shall

be reassigned to Coastal Alternative Program (CAP) and is eligible to attend the CAP

5.05 In the event a student assigned to the GCJJAEP is declared homeless (or in the process of being declared homeless) or is in the process of transferring to another district, the student will remain the responsibility of the original district until the registration/enrollment of the student in another district is completed.

5.06 A mandatory expulsion is one listed in TEC 37 007(a), (d), or (e), as amended

VI COUNTY'S FINANCIAL OBLIGATIONS

The Juvenile Board and the County of Galveston shall provide

- funding for the education component of all placements as detailed in this Agreement,
- staffing of juvenile probation officers,
- supervision officers and other staff, and training thereof,
- the physical plant necessary for the personal safety and security of all participants and providers of services,
- for Galveston County resident students, any and all aspects of any residential component of the GCJJAEP, and
- for Galveston County resident students, all other non-educational matters in support of the program

VII ADMINSTRATIVE RESPONSIBILITIES

7 01 Physical plant maintenance, utility expenses and facility standards to comply with the Americans with Disabilities Act relating to the Galveston County Juvenile Justice Center and associated facilities, shall be the responsibility of Galveston County, not Dickinson ISD nor any other District

7.02 The County may request the removal of any instructional personnel staff member assigned to the GCJJAEP if the assigned staff member is no longer agreeable to the County because of performance, misconduct or other employment related concerns on the part of County Officials The Director of Juvenile Services shall so notify the Superintendent and give the Superintendent in writing the specific reason(s) for the concerns If upon review of the Director's expressed concerns the Superintendent agrees there are performance or other employment related issues, he/ she will timely counsel with and attempt to have those issues properly addressed within seven days If the staff member's performance or other employment related concerns are not corrected to the satisfaction of the County,

the Director will again express the reasons for his/ her concern The Director and the Superintendent will meet and discuss and attempt to reach a consensus on the matter

VIII LIABILITY/TERM

8.01 Only to the extent permitted by applicable law, but without waiver or expansion of any limits established by the Texas Tort Claims Act, each Party to this Agreement shall indemnify and hold harmless the other Parties and their officers, employees and agents, from and against any and all claims proximately caused by negligence, breach, or other act or omission by the indemnifying Party or its officers, employee, or agents

8.02 The term of this Agreement shall be for the 2012-2013 school year according to the school calendar of Dickinson ISD

IX MEMORANDUM OF UNDERSTANDING

The GCJJAEP Governing Board and the Districts adopt this memorandum of understanding in compliance with the Texas Education Code ("TEC"), Section 37 010 (c) and (d), whereby it is agreed and understood that no court may order an expelled student to attend school as a condition of probation except by and through assignment to the Juvenile Justice Alternative Education Program; and the Parties hereby initiate the following operating policy guidelines

The daily administration of all aspects of the GCJJAEP other than educational services including the GCJJAEP Code of Conduct, will be conducted by the Juvenile Justice Department under the direction of its Director or the Director's designee. The program will serve all eligible students from eligible Districts.

9 01 An eligible student is a student who is or was last enrolled in a school district located within Galveston County, and who currently resides in a Galveston County school district An exception for placement may be made pursuant to 37 010 (g), when the student's parents have made a residence change into the district/county and the court jurisdictional issues have been properly accommodated

9 02 The following students shall be eligible to attend the GCJJAEP.

1 Mandatory expelled students under TEC section 37 007 (a), (d), or (e)

2 Students who are under the jurisdiction of the Juvenile Court and are not expelled may be court ordered to receive educational services in the GCJJAEP A copy of the Court Order shall be provided to the student's home district in order to satisfy TEA requirements

3. Students expelled under TEC section 37 007 (a), (d) or (e) who are eligible for attendance in any school within Clear Creek ISD but who are not residing in Galveston County, providing that Galveston County Juvenile authorities have agreed to serve the student who resides in Harris County

4 Students expelled under TEC section 37 0081 (felony offense under Title 5, Texas Penal Code).

5. Students expelled under TEC section 37 309 (removal of registered sex offenders) provided space is available

9 03 The Parties agree to comply with the following admission procedures

1 If a student is expelled from school for conduct for which expulsion is required under Section 37 007 (a), (d), or (e), the juvenile court, GCJJAEP Governing Board or its designee shall provide timely educational services to the student in the GCJJAEP in the county in which the student resides, regardless of the student's age or whether the juvenile court has jurisdiction over the student

2 If placement is initiated by school district expulsion, the District shall notify the Director or the Director's designee of a pending expulsion hearing in order to facilitate the student's transition into the GCJJAEP in the event the student is expelled The District in which the student is or was last enrolled shall provide to the Juvenile Justice Department and the Fiscal Agent, Dickinson ISD, a copy of the order of expulsion Expulsion conducted pursuant to TEC section 37 0081 shall include a statement regarding the specific determinations required under Section 37.0081 (a) (1) and (2) A student who is required to register as a sex offender will only be served pursuant to the same provisions applicable to students expelled under TEC section 37.0081 or applicable court order. District shall provide notice no later than the second business day after the date a hearing is held pursuant to TEC Section 37.009, together with any other notice and information required under TEC Section 37 010 and Family Code Section 52.04. The Juvenile Courts of Galveston County shall consider appropriate proceedings under Title 3 of the Texas Family Code. As required by TEC Section 37 010 (a), an expelled student shall immediately attend the GCJJAEP from the date of expulsion

Accompanying the order of expulsion, the District in which the student is or was last enrolled shall provide to Dickinson ISD a copy of:

- Parent contact information,
- Birth certificate,
- Student attendance and disciplinary records,
- Special programs information and appropriate records showing transfer to GCJJAEP including, but not limited to, 504, Special Education, and bilingual ESL,

- Transfer grades/average in each class,
- Last reporting number (PEIMS/Social Security),
- Transcript and current year's report card;
- High School achievement and aptitude test scores,
- Grades issued during current school year,
- Immunization/Health Record,
- State Assessment (TAKS, STARR, EOC) summary sheet,
- Name, address, phone number, facsimile number, email address of person to whom attendance records are to be sent,
- Application for free and reduced lunch program, and
- Graduation plan as required by law

3 If the student is already under court supervision, the caseworker will recommend whether to amend the conditions of probation and it will be the Court's decision whether to implement any subsequent conditions of probation

a. If conditions of probation are to be amended, the Assistant District Attorney shall prepare a Modification Order requiring the juvenile to participate in the GCJJAEP and the Code of Conduct The Assistant District Attorney will request a court date as soon as practicable and the Court will consider the Order

b If the juvenile was placed in detention due to the violation that resulted in expulsion, the caseworker may prepare conditions of release that would include an order requiring the juvenile to participate in the GCJJAEP and the Code of Conduct which would be approved by the Juvenile Judge

4 If the student is not under prior court supervision, the Juvenile Justice Department, as designated by the Juvenile Court, shall determine if there is probable cause to believe the person engaged in delinquent conduct or conduct indicating a need for supervision If a petition is filed, the Assistant District Attorney may include with the disposition order an order requiring the juvenile to participate in the GCJJAEP and the Code of Conduct for the Court's approval.

5. Provisions for good behavior shall allow for early release of a student, as determined by the Positive Student Release point system, but in no case would that early release be less than 80% of the originally accepted/assigned time Whenever feasible, GCJJAEP will release the student at the end of the sending District's grading period. If the student's release date occurs during a week of state-mandated testing, the student must remain at GCJJAEP to complete the tests No student shall be released during the last week of the sending District's semester

6. Prior to the completion of the student's placement in the GCJJAEP, the program's probation officer will coordinate with the program administrator to contact the campus of record to initiate the student's transfer back to his or her home campus The probation officer will assist in obtaining any information for the home campus and briefly monitor the student's progress upon the student's return.

7 The probation officer will conduct an admission conference with the student and a parent or guardian to review all the GCJJAEP requirements and answer any questions on the first day of attendance

8 Juvenile Justice Department personnel will advise parent(s) or guardian(s) to schedule a physical examination for the student through the Juvenile Justice Department. The student may be admitted to the program prior to completion of the physical exam, but will not participate in the physical training aspect of the program until exam results are received. Students with reduced activity ability will be placed on a modified physical training regimen. Parent(s) or guardian(s) may receive a bill for the exam at a later date The form for the physical shall be as in Addendum 3 to this Agreement If the parents or guardians do not pay, neither the Fiscal Agent nor the sending District shall be liable for payment

9 Parents or guardians shall be responsible for transportation to and from the GCJJAEP for all regular program students (not special education) unless transportation provisions have been made by the local ISD or GCJJAEP (TEC-37.011(k)(6)). Transportation shall be provided for identified special education students who have been ARDed for transportation as a related service. Districts shall individually decide whether school or contracted personal transportation shall be used for those special education students

10. As required under TEC 37 011(b)(4), GCJJAEP shall provide timely educational services in the GCJJAEP to all expelled students (including adult students 18 years of age or older) for which expulsion is required under Section 37 007(a), (d) or (e), regardless of the student's age or whether the juvenile court has jurisdiction over the student

9 04 The GCJJAEP shall have its own code of conduct (Code of Conduct) The Texas Association of School Boards (TASB) model code of conduct shall be the basis for the Code of Conduct, with such modifications/additions, as the Governing Board deems appropriate. All modifications/additions shall be approved by the Governing Board.

Each District shall provide the Juvenile Justice Department with current copies of their respective code of conduct In the event a District amends its existing code of conduct, the District shall, within three days from voting the approval of an amendment, provide a copy of the code of conduct as amended to the Juvenile Justice Department Each District's code of conduct shall be available for public inspection at the referring school at all times that the school is open.

Additionally, each District's code of conduct shall be available for public inspection at the Juvenile Justice Department at all times that the Jerry J Esmond Juvenile Justice Center is open

9.05 Each student shall be provided an educational progress/facilitation plan. GCJJAEP staff and administration shall regularly review the student's academic progress In the case of a high school student, the GCJJAEP administrator of the education component, with the student's parent or guardian, shall review the student's progress towards meeting high school graduation requirements and shall establish a specific graduation plan for the student

Responsibility for pre- and post-testing as required by the TJPC rests with Galveston County. Responsibility for tests as required by the Texas Education Agency (TEA) rests with the education component administrator and the student's home campus as outlined by the TEA Division of Testing and Accountability Responsibility for any other type of assessment and identification of educational status and need rests with the sending District

Identified special education students shall be provided required services (as in their IEP) with any additional cost over and above regular cost of program services for all other participants borne by the sending District Administration of related services and speech therapy is the responsibility of the sending District Administration of the services for limited English proficient (LEP) student is the responsibility of the sending District

9.06 The Parties agree that the order to participate in the program and the Code of Conduct shall be incorporated into each student's case prior to admission and that no student shall be exempted from any requirement in those documents unless specifically modified by a special education IEP or section 504 Accommodation Plan. The Code of Conduct outlines staff expectations of students and proper disciplinary actions for violations.

9 07 Placement of students with disabilities who receive special education services

1 The placement of a student with a disability who receives special education services may be made only by a duly constituted admission, review, and dismissal (ARD) committee

2 Any disciplinary action regarding a student with a disability who receives special education services that would constitute a change in placement under federal law may only occur after a manifestation determination review (MDR) has been conducted by the student's ARD committee. Any disciplinary action regarding a student with a disability who receives special education services shall be determined in accordance with federal and state law and regulations in effect at the time of the action, including the provision of functional behavioral assessments, positive behavioral interventions, strategies, and supports, behavioral intervention plans, and the MDR, as applicable.

3 The District from which the student was expelled shall, in accordance with applicable federal law, provide the administrator of the GCJJAEP or the administrator's designee with reasonable notice of the meeting of the student's ARD committee to discuss the student's expulsion. A representative of the GCJJAEP may participate in the meeting to the extent that the meeting relates to the student's placement in the GCJJAEP

4 GCJJAEP will not schedule an orientation for an expelled special education student until an ARD committee establishes that the student may be disciplined for the behavior under review and a transfer ARD is completed.

5 Related services remain the responsibility of the sending District. GCJJAEP teachers will issue progress reports at the mid-point of each grading period and will monitor progress of IEP goals every nine weeks

9 08 Placement of a student with a Section 504 Accommodation Plan

1 A student who has qualified for an accommodation plan under Section 504 of the Rehabilitation Act of 1973 will receive an accommodated appropriate education at the GCJJAEP

2 A revised accommodation plan must be received by the GCJJAEP administrator prior to scheduling an orientation for the student

9.09 Teachers assigned to the GCJJAEP, as instructional staff who have direct contact with students, shall submit to a criminal history record check and fingerprinting in accordance with 37 T A C Section 348 4(d). Employment in the GCJJAEP is contingent upon the completion and return of acceptable results of criminal history checks

9 10 This Agreement consists of Funding Parameters, Interlocal Cooperation Agreement and Memorandum of Understanding for Juvenile Justice Alternative Education Program.

9 11 This Agreement is effective August 1, 2012 through July 31, 2013 The Parties shall use their best efforts to execute a renewal of the memorandum prior to August 1, 2013 In the absence of a revision, this document shall remain in effect until such time as the Parties, through votes of their governing bodies, determine to void, modify or repeal the entire document or any portion thereof

THE REST OF THIS PAGE IS INTENTIONALLY LEFT BLANK

This Agreement is hereby **EXECUTED IN MULTIPLE ORIGINALS(11)**, as authorized by the County of Galveston by action of Commissioners' Court on the 21st day of August, 2012, by action of the Dickinson Independent School District Board of Trustees on the 16th day of July, 2012, and by each of the other participating school districts by action on dates as indicated below, to be effective the 1st day of August, 2012

GALVESTON COUNTY COMMISSIONER'S COURT

By _____

DICKINSON INDEPENDENT SCHOOL DISTRICT
(as Fiscal Agent and as a Participating District)

By _____

GALVESTON COUNTY JUVENILE BOARD

Date of Juvenile Board Authorization
8/30/2012

By _____

CLEAR CREEK INDEPENDENT SCHOOL DISTRICT

Date of School Board Authorization
7/23/2012

By _____

FRIENDSWOOD INDEPENDENT SCHOOL DISTRICT

Date of School Board Authorization
7/16/2012

By _____

GALVESTON INDEPENDENT SCHOOL DISTRICT

Date of School Board Authorization
7/25/2012

By _____

HIGH ISLAND INDEPENDENT SCHOOL DISTRICT

Date of School Board Authorization

7/16/2012

By _____

HITCHCOCK INDEPENDENT SCHOOL DISTRICT

Date of School Board Authorization

7-10-12

By _____

LA MARQUE INDEPENDENT SCHOOL DISTRICT

Date of School Board Authorization

8/9/2012

By _____

SANTA FE INDEPENDENT SCHOOL DISTRICT

Date of School Board Authorization

7-30-12

By _____

TEXAS CITY INDEPENDENT SCHOOL DISTRICT

Date of School Board Authorization

7-10-12

By _____

AGENDA ITEM #30a1

B121027

GALVESTON COUNTY, TEXAS
COMMISSIONERS COURT
Contract Approval Request

Date of Request	8/11/12	**Department**	Engineering		
Renewal Contract	No	**Orgkey**	3312312111	**Object Code**	multiple
Contract Start Date	10/1/2012	**Vendor**	R W Lucas Construction, LLC		
Contract End Date	6/30/2013	**Vendor No**		**Contract No**	1087
Description	Stewart Road Paving & Drainage Improvements from 7 1/2 Mile Rd to Cove View				
Contract # Issued By Purchasing			**Requested Legal Review**	**Yes** _____ **No** X	

Fund Name	Fund #	FY12 $ Budget	FY12 $ Request	FY13 $ Request	FY14 $ Request	FY15 $ Request	FY15 $ Request
Stewart Rd- Cove View to 7 Mile	5731133	$952,524	$952,524				
Stewart Rd Re-Aligned	5731134	$658,457	$658,457				
7 Mile Re-Aligned	5731135	$576,304	$576,304				
Ave H	5731136	$649,083	$448,849				
Totals		$2,836,368	$2,636,134	-		-	
Total Cost (County Funds)		$2,636,134	**See attached worksheet for total job cost**				

$ 3,755,880.27

Approved By	Date	Signature
Department Head	8/10/2012	G M Fitzgerald
Purchasing Agent	8-13-2012	
County Legal		

Contract listed in Budget Documentation (Yes/No) Yes

County Budget Office

Form Number

THE COUNTY OF GALVESTON

RUFUS CROWDER, CPPO CPPB
PURCHASING AGENT

COUNTY COURTHOUSE
722 Moody (21st Street)
Fifth (5th) Floor
GALVESTON, TEXAS 77550
(409) 770-5371

GWEN MCLAREN, CPPB
ASST PURCHASING AGENT

August 13, 2012

Honorable County Judge
And Commissioners' Court
County Courthouse
Galveston, Texas

Re: Bid #B121027, Stewart Road Improvements Project from Cove View Street to 7 ½ Mile Road

Gentlemen,

On July 10, 2012 bids were opened for Bid #B122027, Stewart Road Improvements Project from Cove View Street to 7 ½ Mile Road, at which time three (3) bids were received from the following companies

- R W Lucas Construction, LLC — League City, Texas
- Metro City Construction, LP — Houston, Texas
- SER Construction Partners, LLC — Pasadena, Texas

It is recommended that you award this bid to R W Lucas Construction, LLC

Your consideration in this matter will be greatly appreciated

Respectfully submitted,

Rufus G Crowder, CPPO, CPPB
Purchasing Agent
County of Galveston

Attachments

McCullough, Darla

From	Fitzgerald, Mike
Sent:	Friday, August 10, 2012 10 48 AM
To:	Crowder, Rufus
Cc	Henry, Mark, Doyle, Patrick, O'Brien, Kevin, Holmes, Stephen, Clark, Ken, Ken Clark (clarkken@juno com), Lewis, Roxann, Grady, Patricia, Cherry, Jane, Gilliam, Cindy, Robertson, Elizabeth, Trammell, Mel, Yearnd, Denise, kovacsmic@cityofgalveston org, martinsar@cityofgalveston org, Mclaren, Gwen, McCullough, Darla, Fitzgerald, Mike
Subject	FW Stewart Rd Bid Tabulation
Attachments.	Stewart Rd Bid Items_100pctSubmittal_20120712 BID TABS xlsx, Contract Approval Form xlsx, Budget Amendment worksheet xlsx, city of galvetson agenda 8 9 12.pdf

Rufus, attached is the bid tabulation for the Stewart Rd Improvements project from Cove View St to 71/2 Mile Rd It is my recommendation that the project be awarded to the low responsive bidder, R W Lucas Construction, LLC, for the base bid and both alternates in the total amount of $3,417,667 99. Please note these bids were opened on July10, 2012 and expire on Sep 8, 2012. The only scheduled court meeting before the expiration date is Aug 21st.

We have attached the new Contract Approval Request Form as well as a separate worksheet showing the total project cost of $3,588,551 including 5% contingencies. And attached is a copy of the City of Galveston Aug 9, 2012 agenda showing the city council has formally approved the $952,417 for the city's share

Mel, we will need a budget amendment to recognize the City Of Galveston's $952,417 and to move $448,849 from Ave H to Stewart Rd

We will also need an account number to deposit the City of Galveston's $952,417 as we are anticipating receiving it on or before the Aug 21st

From: Paul Demopulos [mailto:PCD@binkleybarfield.com]
Sent: Thursday, July 12, 2012 11:26 AM
To: Fitzgerald, Mike
Cc: Joel Schramm, Robert Wheeler
Subject: Steward Rd Bid Tabs

Mike

After you had a chance to review would like to talk to you before I issue the letter of low bidder

Thanks,

Paul C. Demopulos, P.E.
Senior Project Manager

Binkley & Barfield, Inc.
consulting engineers

1710 Seamist Drive
Houston, TX 77008

713 869 3433 Tel
713 725 3953 Cell
713 869 6702 Fax

*yellow equals math error

*Did not complete bid

7/12/2012

STEWART ROAD FROM 7 1/2 MILE ROAD TO COVE VIEW
CONSTRUCTION COST ESTIMATE

					Engineer's Estimate		R W Lucas Construction LLC		SER Construction Partners LLC		Metro City Construction,LP		AVG of 3 Bidders	
					Bid Total =		Bid Total =		Bid Total =		Bid Total =		Bid Total =	
SPEC NO	DESC CODE	DESCRIPTION	UNIT	ESTIMATED QUANTITY	PRICE PER UNIT	AMOUNT	PRICE PER UNIT	AMOUNT	PRICE PER UNIT	AMOUNT	PRICE PER UNIT	AMOUNT	PRICE PER UNIT	AMOUNT
100	2002	PREPARING ROW	STA	49 0	$2 000 00	$98 000 00	$1 718 32	$84 197 68	$3 900 00	$191 100 00	$2,800 00	$137 200 00	$2 806 11	$137 499 23
104	2017	REMOVING CONC (DRIVEWAYS)	SY	134 0	$7 00	$938 00	$6 00	$804 00	$6 00	$804 00	$11 00	$1 474 00	$7 67	$1 027 33
110	2001	EXCAVATION (ROADWAY)	CY	4 683	$5 00	$23 415 00	$10 00	$46 830 00	$7 00	$32 781 00	$8 00	$37 464 00	$8 33	$39 025 00
132	2006	EMBANKMENT (FINAL)(DENS CONT)(TY C)	CY	7 700	$12 00	$92 400 00	$18 00	$123 200 00	$7 00	$53 900 00	$15 00	$115 500 00	$12 67	$97 533 33
161	2017	COMPOST MANUF TOPSOIL (BIP) (4)	SY	30 420	$0 55	$16 731 00	$2 20	$66 924 00	$0 20	$6 084 00	$7 00	$212,940 00	$3 13	$95 316 00
162	2002	BLOCK SODDING	SY	2 312	$5 00	$11 560 00	$3 50	$8 092 00	$4 00	$9 248 00	$4 00	$9 248 00	$3 83	$8 862 67
164	2001	BROADCAST SEED (PERM)(RURAL)(SANDY)	SY	30 217	$0 20	$6 043 40	$0 20	$6 043 40	$0 30	$9 065 10	$0 20	$6 043 40	$0 23	$7 050 63
260	2027	LIME TRT (EXIST MATL) (6)	SY	27 326 0	$3 00	$81 978 00	$2 60	$71 047 60	$1 90	$51 919 40	$2 50	$68 315 00	$2 33	$63 760 67
260	2043	LIME (HYD COM OR QK) (SLURRY)	TON	273 3	$160 00	$43 728 00	$165 00	$45 094 50	$154 00	$42 088 20	$165 00	$45 094 50	$161 33	$44 092 40
265	2006	FLY ASH (CLASS CS)	TON	628 5	$60 00	$37 710 00	$80 00	$50 280 00	$70 00	$43 995 00	$75 00	$47 137 50	$75 00	$47 137 50
292	2007	ASPHALT STAB BASE (GR 2) (PG 64)	TON	42 9	$90 00	$3 861 00	$150 00	$6 435 00	$150 00	$6 435 00	$110 00	$4 719 00	$136 67	$5 863 00
305	2014	SALV HAUL & STKPL RCL APH PV (VAR DEPTH)	SY	14 789	$5 00	$73 945 00	$1 80	$26 620 20	$3 40	$50 282 60	$11 00	$162 679 00	$5 40	$79 860 60
341	2122	D-GR HMA (QCQA) TY-D PG 70-22	TON	14 3	$95 00	$1 358.50	$156 00	$2 230 80	$175 00	$2 502 50	$200 00	$2 860 00	$177 00	$2 531 10
360	2001	CONC PVMT (CONT REINF-CRCP)(8")	SY	25 151	$35 00	$880 285 00	$37 80	$950 707 80	$38 00	$955 738 00	$49 00	$1 232 399 00	$41 60	$1 046 281 60
360	2021	CONC PVMT (CONT REINF CRCP)(6)	SY	1 286	$40 00	$51 440 00	$36 00	$46 296 00	$34 50	$44 367 00	$44 00	$56 584 00	$38 17	$49 082 33
360	2065	CONC PVMT (CONT REINF CRCP)(7")	SY	841	$50 00	$42 050 00	$37 00	$31 117 00	$39 00	$32 799 00	$46 70	$39 274 70	$40 90	$34 396 90
400	2005	CEM STABIL BKFL	CY	613	$35 00	$21 455 00	$26 75	$16 397 75	$50 00	$30 650 00	$35 00	$21 455 00	$37 25	$22 834 25
432	2033	RIPRAP (STONE)(COMMON)(DRY)(12 IN)	CY	7	$200 00	$1 400 00	$100 00	$700 00	$50 00	$350 00	$120 00	$840 00	$90 00	$630 00
432	2039	RIPRAP (MOW STRIP)(4 IN)	CY	21	$400 00	$8 400 00	$500 00	$10 500 00	$230 00	$4 830 00	$1 050 00	$22 050 00	$593 33	$12 460 00
432	2084	RIPRAP (CONC)(CL B)(4)	CY	49	$300 00	$14 700 00	$500 00	$24 500 00	$330 00	$16 170 00	$1 550 00	$75,950 00	$793 33	$38 873 33
464	2003	RC PIPE (CL III)(18 IN)	LF	787	$50 00	$39 350 00	$50 00	$39 350 00	$45 00	$35 415 00	$54 00	$42 498 00	$49 67	$39 087 67
464	2005	RC PIPE (CL III)(24 IN)	LF	262	$65 00	$17 030 00	$47 00	$12 314 00	$50 00	$13 100 00	$66 00	$17 292 00	$54 33	$14 235 33
464	2022	RC PIPE (CL IV)(24 IN)	LF	114	$95 00	$10 830 00	$51 00	$5 814 00	$160 00	$18 240 00	$66 00	$7 524 00	$92 33	$10 526 00
464	2022	RC PIPE (CL IV)(36 IN)	LF	136	$120 00	$16 320 00	$85 00	$11 560 00	$160 00	$21 760 00	$154 00	$20 944 00	$133 00	$18 088 00
465	2003	INLET (COMPL)(TY H)	EA	3	$3 000 00	$9 000 00	$2 475 00	$7 425 00	$1 800 00	$5 400 00	$2 005 00	$6 015 00	$2 093 33	$6 280 00
467	2211	SET(TY II)(24 IN)(RCP)(3 1)(C)	EA	8	$800 00	$6 400 00	$690 00	$5 520 00	$1 700 00	$13 600 00	$680 00	$5 440 00	$1 023 33	$8 186 67
467	2215	SET(TY II)(36 IN)(RCP)(3 1)(C)	EA	4	$1 000 00	$4 000 00	$2 010 00	$8 040 00	$2 200 00	$8 800 00	$1 030 00	$4 120 00	$1 746 67	$6 986 67
474	2001	SLOT DRAIN (GAL STL)(12 IN)	LF	100	$150 00	$15 000 00	$154 00	$15,400 00	$30.00	$3 000 00	$100 00	$10 000 00	$94 67	$9 466 67
474	2002	SLOT DRAIN OUTFALL (GAL STL)(12 IN)	LF	7	$100 00	$700 00	$154 00	$1 078 00	$260 00	$1 820 00	$50 00	$350 00	$154 67	$1 082 67
479	2004	ADJ MANHS (SANITARY)	EA	7	$1 000 00	$7 000 00	$2 600 00	$18 200 00	$700 00	$4 900 00	$300 00	$2,100 00	$1 200 00	$8 400 00
496	2002	REMOV STR (INLET)	EA	3	$500 00	$1 500 00	$157 00	$471 00	$200 00	$600 00	$250 00	$750 00	$202 33	$607 00
496	2004	REMOV STR (SET)	EA	2	$300 00	$600 00	$105 00	$210 00	$500 00	$1 000 00	$100 00	$200 00	$235 00	$470 00
496	2007	REMOV STR (PIPE)	LF	925	$10 00	$9 250 00	$10 00	$9 250 00	$13 00	$12 025 00	$5 00	$4 625 00	$9 33	$8 633 33
496	2043	REMOV STR (SMALL FENCE)	LF	1 145	$2 00	$2 290 00	$1 26	$1 442.70	$4 00	$4 580 00	$1 00	$1 145 00	$2 09	$2 389 23
496	2054	REMOV STR (WOOD STR)	EA	1	$200 00	$200 00	$1 260 00	$1 260 00	$2,000 00	$2 000 00	$250 00	$250 00	$1 170 00	$1 170 00
500	2001	MOBILIZATION (MAX 5%)	LS	1	$111 090 45	$111 090 45	$84 197 60	$84 197 60	$162 000 00	$162,000 00	$180 565 15	$180 565 15	$142,254 25	$142,254 25
502	2001	BARRICADES SIGNS AND TRAFFIC HANDLING	MO	8	$3 000 00	$24 000 00	$4 000 00	$32 000 00	$6 000 00	$48 000 00	$2 400 00	$19 200 00	$4 133 33	$33 066 67
506	2002	ROCK FILTER DAMS (INSTALL) (TY 2)	LF	90	$20 00	$1 800 00	$20 00	$1 800 00	$30 00	$2 700 00	$60 00	$5 400 00	$36 67	$3 300 00
506	2009	ROCK FILTER DAMS (REMOVE)	LF	90	$6 00	$540 00	$5 00	$450 00	$5 00	$450 00	$1 00	$90 00	$3 67	$330 00
506	2016	CONSTRUCTION EXITS (INSTALL) (TY 1)	SY	158	$15 00	$2 340 00	$15 00	$2 340 00	$25 00	$3 900 00	$13 00	$2,028 00	$17 67	$2 758 00
506	2019	CONSTRUCTION EXITS (REMOVE)	SY	156	$8 00	$1,248 00	$5 00	$780 00	$5 00	$780 00	$2 00	$312 00	$4 00	$624 00
506	2034	TEMPORARY SEDIMENT CONTROL FENCE	LF	2 695	$3 00	$8 085 00	$1 26	$3 395 70	$2 00	$5 390 00	$1 50	$4 042 50	$1 59	$4 276 07
506	2040	TEMPORARY SEDIMENT CONTROL FENCE (REMOV	LF	2 695	$0 20	$539 00	$0 50	$1 347 50	$0 30	$808 50	$0 30	$808 50	$0 37	$988 17
508	2002	CONSTRUCTING DETOURS	SY	5 325	$30 00	$159 750 00	$36 00	$191 700 00	$35 00	$186 375 00	$45 00	$239 625 00	$38 67	$205 900 00
510	2001	ONE WAY TRAFFIC CONTROL	HR	120	$60 00	$7 200 00	$50 00	$6 000 00	$50 00	$6 000 00	$130 00	$15 600 00	$76 67	$9 200 00
540	2001	MTL W BEAM GD FEN (TIM POST)	LF	356 25	$40 00	$14 250 00	$26 00	$9,262 50	$30 00	$10 687 50	$28 00	$9 975 00	$28 00	$9 975 00
544	2001	GUARDRAIL END TREATMENT (INSTALL)	EA	2	$4 000 00	$8 000 00	$2 600 00	$5 200 00	$2 200 00	$4 400 00	$2 600 00	$5 200 00	$2 466 67	$4 933 33
552	2004	WIRE FENCE (TY D)	LF	1 145	$10 00	$11 450 00	$6 50	$7 442 50	$5 00	$5 725 00	$9 50	$10 877 50	$7 00	$8 015 00
580	2011	MAILBOX INSTALL S (TWG-POST) TY 2 FND	EA	12	$200 00	$2 400 00	$126 00	$1 512 00	$154 00	$1 848 00	$165 00	$1 980 00	$148 33	$1 780 00
580	2024	MAILBOX INSTALL M (TWG POST) TY 2 FND	EA	2	$400 00	$800 00	$326 00	$652 00	$187 00	$374 00	$200 00	$400 00	$237 67	$475 33
644	2001	IN SM RD SN SUP&AM TY10BWG (1) SA (P)	EA	40	$360 00	$14 400 00	$500 00	$20 000 00	$330 00	$13 200 00	$350 00	$14 000 00	$393 33	$15 733 33
644	2081	IN SM RD SN SUP&AM TYTWT(1) WS (P)	EA	32	$310 00	$9 920 00	$260 00	$8 320 00	$330 00	$10 560 00	$350 00	$11 200 00	$313 33	$10 026 67
644	2060	REMOVE SM RD SN SUP & AM	EA	17	$65 00	$1 105 00	$60 00	$1 020 00	$65 00	$1 105 00	$70 00	$1 190 00	$65 00	$1 105 00

658	2292	INSTL DEL ASSM (D-DW) SZ 1 (FLX) GND	EA	12	$45 00	$540 00	$50 00	$600 00	$65 00	$780 00	$65 00	$780 00	$60 00	$720 00
658	2316	INSTL OM ASSM (OM-2Z) (FLX) GND	EA	8	$50 00	$400 00	$50 00	$400 00	$77 00	$616 00	$83 00	$664 00	$70 00	$560 00
662	2067	WK ZN PAV MRK REMOV (W) 4 (SLD)	LF	16 823	$0 75	$12 617 25	$0 36	$6 056 28	$0 60	$10 093 80	$0 60	$10 093 80	$0 52	$8 747 96
662	2099	WK ZN PAV MRK REMOV (Y) 4 (SLD)	LF	21 828	$0 75	$16 371 00	$0 36	$7 858 08	$0 60	$13 096 80	$0 60	$13 096 80	$0 52	$11 350 56
666	2006	REFL PAV MRK TY I (W) 4" (DOT) (100 MIL)	LF	128	$2 00	$256 00	$0 50	$64 00	$2 00	$256 00	$1 30	$166 40	$1 27	$162 13
666	2012	REFL PAV MRK TY I (W) 4 (SLD) (100 MIL)	LF	10 248	$0 40	$4 099 20	$0 50	$5 124 00	$0 40	$4 099 20	$0 50	$5 124 00	$0 47	$4 782 40
666	2048	REFL PAV MRK TY I (W) 24 (SLD) (100 MIL)	LF	531	$6 00	$3 186 00	$6 00	$3 186 00	$6 00	$3 186 00	$6 25	$3 318 75	$6 08	$3 230 25
666	2054	REFL PAV MRK TY I (W) (ARROW) (100 MIL)	EA	19	$110 00	$2 090 00	$100 00	$1 900 00	$132 00	$2 508.00	$141 00	$2 679 00	$124 33	$2 362 33
666	2057	REFL PAV MRK TY I (W) (BIK ARW) (100 MIL)	EA	11	$80 00	$880 00	$60 00	$660 00	$132 00	$1 452 00	$141 00	$1 551 00	$111 00	$1 221 00
666	2063	REFL PAV MRK TY I (W) (BIKE SYML) (100 MIL)	EA	12	$131 00	$1 572 00	$86 00	$1 032 00	$143 00	$1 716 00	$153.00	$1 836 00	$127 33	$1 528 00
666	2096	REFL PAV MRK TY I (W) (WORD) (100 MIL)	EA	5	$150 00	$750 00	$100 00	$500 00	$132 00	$660 00	$141 00	$705 00	$124 33	$621 67
666	2105	REFL PAV MRK TY I (Y) 4 (BRK) (100 MIL)	LF	4 228	$0 45	$1 902 60	$0 50	$2 114 00	$0 50	$2 114 00	$0 50	$2 114 00	$0 50	$2 114 00
666	2111	REFL PAV MRK TY I (Y) 4 (SLD) (100 MIL)	LF	10 729	$0 45	$4 828 05	$0 50	$5 364 50	$0 40	$4 291 60	$0 50	$5 364 50	$0 47	$5 006 87
666	2132	REFL PAV MRK TY I (Y) 24 (SLD) (100 MIL)	LF	208	$6 00	$1 248 00	$6 00	$1 248 00	$6 00	$1 248 00	$6 00	$1 248 00	$6 00	$1 248 00
672	2015	REFL PAV MRKR TY II A-A	EA	318	$3 00	$954 00	$4 50	$1 431 00	$4 00	$1 272 00	$4 00	$1 272 00	$4 17	$1 325 00
		RETAINING WALL	LF	555	$480 00	$266 400 00	$500 00	$277 500 00	$460 00	$255 300 00	$755 00	$419 025 00	$571 67	$317 275 00
					TOTAL	[redacted]	TOTAL	[redacted]	TOTAL	[redacted]	TOTAL	[redacted]	TOTAL	[redacted]

ALTERNATIVE BID ITEMS				Engineer's Estimate			R W Lucas Construction LLC		SER Construction Partners,LLC		Metro City Construction L P		AVG of 3 Bidders	
SPEC NO	DESC CODE	DESCRIPTION	UNIT	ESTIMATED QUANTITY	PRICE PER UNIT	AMOUNT	PRICE PER UNIT	AMOUNT	PRICE PER UNIT	AMOUNT	PRICE PER UNIT	AMOUNT	PRICE PER UNIT	AMOUNT
467	2286	SET(TY II)(18 IN)(RCP)(6 1)(P)	EA	32	$400 00	$12 800 00	$400 00	$12 800 00	NB	#VALUE!	NB	#VALUE!	$400 00	$12 800 00
467	2288	SET(TY II)(24 IN)(RCP)(6 1)(P)	EA	8	$580 00	$4 640 00	$580 00	$4 640 00	NB	#VALUE!	NB	#VALUE!	$580 00	$4 640 00
					TOTAL	[illegible]	TOTAL	[illegible]	TOTAL	NB	TOTAL	NB	TOTAL	[illegible]

ALTERNATIVE WATERLINE BID ITEMS

SPEC NO	DESC CODE	DESCRIPTION	UNIT	ESTIMATED QUANTITY	Engineer's Estimate PRICE PER UNIT	Engineer's Estimate AMOUNT	R W Lucas Construction,LLC PRICE PER UNIT	R W Lucas Construction,LLC AMOUNT	SER Construction Partners LLC PRICE PER UNIT	SER Construction Partners LLC AMOUNT	Metro City Construction,L P PRICE PER UNIT	Metro City Construction,L P AMOUNT	AVG of 3 Bidders PRICE PER UNIT	AVG of 3 Bidders AMOUNT
02664		Furnish and Install 8 PVC (AWWA C900) Class 150 DR 18 Waterline by Open Cut including Fittings Thrust Blocking Restrained Joints and Appurtenances Complete-in-Place In Accordance with the Plans and Specifications	LF	260	$65 00	$16 900 00	$76 00	$19 760 00	$60 00	$15 600 00	$87 00	$22 620 00	$74 33	$19 326 67
02664		Furnish and Install 16 PVC (AWWA C905) Class 235 DR 18 Waterline by Open Cut including Fittings Thrust Blocking Restrained Joints and Appurtenances Complete-in-Place In Accordance with the Plans and Specifications	LF	40	$110 00	$4 400 00	$265 00	$10 600 00	$150 00	$6 000 00	$187 00	$7 480 00	$200 67	$8 026 67
02664		Furnish and Install 20" HDPE (AWWA C906) Waterline by Open Cut including Fittings Thrust Blocking Adapters and Appurtenances Complete-in-Place In Accordance with the Plans and Specifications	LF	4 921	$130 00	$639 730 00	$105 00	$516 705 00	$93 00	$457 653 00	$152 00	$747 992 00	$116 67	$574 116 67
02664		Trenchless Construction 20" HDPE (AWWA C906) Waterline including Access Pits and Appurtenances Complete-in Place In Accordance with the Plans and Specifications	LF	115	$250 00	$28 750 00	$300 00	$34 500 00	$150 00	$17 250 00	$120 00	$13 800 00	$190 00	$21 850 00
02664		Trenchless Construction 8 PVC (AWWA C900) Class 150 DR 18 Waterline including Access Pits Restrained Joints and Appurtenances Complete-in-Place In Accordance with the Plans and Specifications	LF	85	$125 00	$10 625 00	$98 00	$8 330 00	$120 00	$10 200 00	$70 00	$5 950 00	$96 00	$8 160 00
01526		Trench Safety System Waterline Construction (All Depths) Complete-in-Place In Accordance with the Plans and Specifications	LF	5 221	$1 00	$5 221 00	$1 00	$5 221 00	$0 10	$522 10	$1 00	$5 221 00	$0 70	$3 654 70
02640		Furnish and Install 20" Butterfly Valve with Box AWWA C504 NRS Complete-in-Place In Accordance with the Plans and Specifications	EA	5	$8 500 00	$42 500 00	$13 200 00	$66 000 00	$7 500 00	$37 500 00	$10 000 00	$50 000 00	$10 233 33	$51 166 67
02645		Furnish and Install Fire Hydrant Assembly including Fire Hydrant 6 Gate Valve with Box ALL DEPTHS Complete-in-Place In Accordance with the Plans and Specifications	EA	11	$3 500 00	$38 500 00	$4 625 00	$50 875 00	$4 200 00	$46 200 00	$4 650 00	$51 150 00	$4 491 67	$49 408 33
02645		Furnish and Install Fire Hydrant Branch ALL DEPTHS Complete-in-Place In Accordance with the Plans and Specifications	LF	70	$50 00	$3 500 00	$25 00	$1 750 00	$20 00	$1 400 00	$30 00	$2 100 00	$25 00	$1 750 00
02645		Remove and Salvage Existing Fire Hydrant Complete-in-Place In Accordance with the Plans and Specifications	EA	1	$400 00	$400 00	$225 00	$225 00	$200 00	$200 00	$120 00	$120 00	$181 67	$181 67
02667		Furnish and Install 8" Wet Connection Complete-in-Place In Accordance with the Plans and Specifications	EA	3	$850 00	$2 550 00	$1 000 00	$3 000 00	$500 00	$1 500 00	$930 00	$2 790 00	$810 00	$2 430 00
02667		Furnish and Install 16 Wet Connection Complete-in-Place In Accordance with the Plans and Specifications	EA	1	$2 000 00	$2 000 00	$1 700 00	$1 700 00	$1 800 00	$1 800 00	$3 000 00	$3 000 00	$2 166 67	$2 166 67
02667		Furnish and Install 20" Wet Connection Complete-in-Place In Accordance with the Plans and Specifications	EA	2	$3 500 00	$7 000 00	$3 200 00	$6 400 00	$2 500 00	$5 000 00	$6 000 00	$12 000 00	$3 900 00	$7 800 00
02669		Cut Plug and Abandon Existing 8 Water Main including Grout Fill Complete-in-Place In Accordance with the Plans and Specifications	EA	3	$500 00	$1 500 00	$500 00	$1 500 00	$250 00	$750 00	$250 00	$750 00	$333 33	$1 000 00
02669		Cut Plug and Abandon Existing 16 Water Main including Grout Fill Complete-in Place In Accordance with the Plans and Specifications	EA	1	$850 00	$850 00	$1 200 00	$1 200 00	$300 00	$300 00	$920 00	$920 00	$806 67	$806 67
02669		Cut Plug and Abandon Existing 20 Water Main including Grout Fill Complete-in-Place In Accordance with the Plans and Specifications	EA	6	$1 750 00	$10 500 00	$1 935 00	$11 610 00	$800 00	$4 800 00	$1 660 00	$9 960 00	$1 465 00	$8 790 00

01563		Furnish and Install Well Pointing Complete-in-Place In Accordance with the Plans and Specifications	LF	5 221	$15 00	$78 315 00	$22 00	$114 862 00	$20 00	$104 420 00	$28 00	$146 188 00	$23 33	$121 823 33
02665		Furnish and Install 3/4 1 Single Short Service Replacement Including Reconnect To Meter Complete-in-Place In Accordance with the Plans and Specifications	EA	2	$750 00	$1 500 00	$16 20	$32 40	$700 00	$1 400 00	$433 00	$866 00	$383 07	$766 13
02665		Furnish and Install 3/4" 1" Single Long Service Replacement Including Reconnect To Meter Complete in-Place In Accordance with the Plans and Specifications	EA	8	$1 200 00	$9 600 00	$1 950 00	$15 600 00	$1 300 00	$10 400 00	$1 100.00	$8 800 00	$1 450 00	$11 600 00
02665		Furnish and Install 1 1/2" 2 Single Short Service Replacement Including Reconnect To Meter Complete-in-Place In Accordance with the Plans and Specifications	EA	1	$1 000 00	$1 000 00	$1 950 00	$1 950 00	$1 600 00	$1 600 00	$816 00	$816 00	$1 455 33	$1 455 33
02665		Furnish and Install 1 1/2 - 2 Single Long Service Replacement Including Reconnect To Meter Complete-in Place In Accordance with the Plans and Specifications	EA	1	$1 500 00	$1 500 00	$2 350 00	$2 350 00	$2 500 00	$2 500 00	$1 944 00	$1 944 00	$2 264 67	$2 264 67
02228		Extra Special Excavation In Accordance with the Specifications	CY	100	$10 00	$1 000 00	$12 00	$1 200 00	$10 00	$1 000 00	$10 00	$1 000 00	$10 67	$1 066 67
02228		Extra Hand Excavation In Accordance with the Specifications	CY	100	$10 00	$1 000 00	$30 00	$3 000 00	$10 00	$1 000 00	$10 00	$1 000 00	$16 67	$1 666 67
02228		Extra Machine Excavation In Accordance with the Specifications	CY	100	$5 00	$500 00	$6 00	$600 00	$5 00	$500 00	$5 00	$500 00	$5 33	$533 33
02228		Extra Placement of Special Backfill In Accordance with the Specifications	CY	150	$15 00	$2 250 00	$12 00	$1 800 00	$15 00	$2 250 00	$15 00	$2 250 00	$14 00	$2 100 00
02228		Extra Replacement of Material In Accordance with the Specifications	CY	150	$15 00	$2 250 00	$10 00	$1 500 00	$10 00	$1 500 00	$10 00	$1 500 00	$10 00	$1 500 00
02269		Grout Fill Abandoned 16 Waterline	LF	115	$5 00	$575 00	$9 00	$1 035 00	$10 00	$1 150 00	$4 50	$517 50	$7 83	$900 83
02269		Grout Fill Abandoned 16 Waterline	LF	2 085	$15 00	$31 275 00	$10 00	$20 850 00	$8 00	$16 680 00	$10 00	$20 850 00	$9 33	$19 460 00
02269		Grout Fill Abandoned 16 Waterline	LF	2 925	$15 00	$43 875 00	$16 50	$48,262 50	$15 00	$43 875 00	$13 00	$38 025 00	$14 83	$43 387 50
					TOTAL	[illegible]	TOTAL	[illegible]	TOTAL	[illegible]	TOTAL	[illegible]	TOTAL	[illegible]

COPY

Proposal - Page 1
BID NUMBER B121027

BID PROPOSAL

The bidder hereby proposes to furnish all labor, material, equipment and incidentals for

Stewart Road Paving and Drainage Improvements from 7 ½ Mile Rd to Cove View

Enclosed is a Certified Check, Cashier's Check or Bid Bond in the sum of 5% of the greatest amount bid

Bidder agrees to perform in accordance with the requirements of the contract documents in consideration of payment by the County of the prices in this proposal

IN CASE OF DISCREPANCY BETWEEN UNIT PRICES AND EXTENDED PRICES, UNIT PRICES WILL GOVERN

This bid sheet must be completely filled out in ink or typewritten with any necessary supplemental information attached.

The undersigned hereby agrees to all of the foregoing terms and provisions and to all terms and provisions of the contract, if awarded, which includes all provisions of Sections I - VI of this bid package

Note. All items of work required under this contract not specifically called for in the proposal as pay items shall be considered incidental to the various bid items and no separate payment shall be made for same.

BIDDER RW Lucas Construction, LLC

SIGNATURE

PRINT NAME Ryan Lucas

TITLE President

ADDRESS 551 C League City Parkway

CITY, STATE League City Texas

ZIP 77573

TELEPHONE 281-316-9990

FAX NO 281-316-6087

DATE June 28 2012

ADDENDUM NO 3

BID FORM
STEWART ROAD PAVING AND DRAINAGE IMPROVEMENT PROJECT
FROM 7 1/2 MILE ROAD TO COVE VIEW, GALVESTON, TEXAS

ITEM NO	SPEC NO	DESCRIPTION	UNIT	QNTY	MEASUREMENT	UNIT PRICE IN WORDS	UNIT PRICE	TOTAL PRICE
1	100	PREPARING ROW	STA	49	ACTUAL	One thousand seven hundred eighteen DOLLARS AND thirty two CENTS	1,718 32	84 197 68
2	104	REMOVING CONC (DRIVEWAYS)	SY	134	PLANS	Six DOLLARS AND zero CENTS	6 00	804 00
3	110	EXCAVATION (ROADWAY)	CY	4683	PLANS	Ten DOLLARS AND zero CENTS	10 00	46 830 00
4	132	EM BANKMENT (FINAL)(DENS CONT)(TY C)	CY	7700	PLANS	Sixteen DOLLARS AND zero CENTS	16 00	123,200 00
5	161	COMPOST MANUF TOPSOIL (BIP) (4)	SY	30420	ACTUAL	Two DOLLARS AND twenty CENTS	2 20	66 924 00
6	162	BLOCK SODDING	SY	2317	ACTUAL	Three DOLLARS AND fifty CENTS	3 50	8 092 00
7	164	BROADCAST SEED (PERM)(RURAL)(SANDY)	SY	30217	ACTUAL	Zero DOLLARS AND twenty CENTS	0 20	6,043 40
8	260	LIME TRT (EXIST MATL) (8")	SY	27326	ACTUAL	Two DOLLARS AND sixty CENTS	2 60	71 047 60
9	260	LIME (HYD, COM OR QK) (SLURRY)	TON	273 3	ACTUAL	One hundred sixty five DOLLARS AND zero CENTS	165 00	45,094 50
10	265	FLY ASH (CLASS CS)	TON	628 5	ACTUAL	Eighty DOLLARS AND zero CENTS	80 00	50,280 00
11	292	ASPHALT STAB BASE (GR 2) (PG 64)	TON	42 9	ACTUAL	One hundred fifty DOLLARS AND zero CENTS	150 00	6,435 00
12	305	SALV HAUL & STKPL RCL APH PV (VAR DEPTH)	SY	14789	ACTUAL	One DOLLARS AND eighty CENTS	1 80	26 620 20
13	341	D-GR HMA (QCQA) TY-D PG 70-22	TON	14 3	ACTUAL	One hundred fifty six DOLLARS AND zero CENTS	156 00	2 230 80
14	360	CONC PVMT (CONT REINF-CRCP)(8)	SY	25151	ACTUAL	Thirty seven DOLLARS AND eighty CENTS	37 80	950 707 80
15	360	CONC PVMT (CONT REINF-CRCP)(6)	SY	1286	ACTUAL	Thirty six DOLLARS AND zero CENTS	36 00	46,296 00
16	360	CONC PVMT (CONT REINF CRCP)(7")	SY	841	ACTUAL	Thirty seven DOLLARS AND zero CENTS	37 00	31 117 00
17	400	CEM STABIL BKFL	CY	613	PLANS	Twenty six DOLLARS AND seventy five CENTS	26 75	16,397 75
18	432	RIPRAP (STONE)(COMMON)(DRY)(12 IN)	CY	7	ACTUAL	One hundred DOLLARS AND zero CENTS	100 00	700 00

BID FORM
STEWART ROAD PAVING AND DRAINAGE IMPROVEMENT PROJECT
FROM 7 1/2 MILE ROAD TO COVE VIEW, GALVESTON, TEXAS

19	432	RIPRAP (MOW STRIP)(4 IN)	CY	21	ACTUAL	Five hundred DOLLARS AND zero CENTS	500 00	10 500 00
20	432	RIRPAP (CONC)(CL B)(4")	CY	49	ACTUAL	Five hundred DOLLARS AND zero CENTS	500 00	24,500 00
21	464	RC PIPE (CL III)(18 IN)	LF	787	ACTUAL	Fifty DOLLARS AND zero CENTS	50 00	39 350 00
22	464	RC PIPE (CL III)(24 IN)	LF	262	ACTUAL	Forty seven DOLLARS AND zero CENTS	47 00	12 314 00
23	464	RC PIPE (CL IV)(24 IN)	LF	114	ACTUAL	Fifty one DOLLARS AND zero CENTS	51 00	5 814 00
24	464	RC PIPE (CL IV)(36 IN)	LF	136	ACTUAL	Eight five DOLLARS AND zero CENTS	85 00	11,560 00
25	465	INLET (COMPL)(TY 4)	EA	3	ACTUAL	Two Thou Four Hundred Seventy Five DOLLARS AND zero CENTS	2,475 00	7,425 00
26	467	SET(TY II)(24 IN)(RCP)(3 1)(C)	EA	8	ACTUAL	Six hundred ninety DOLLARS AND zero CENTS	690 00	5 520 00
27	467	SET(TY II)(36 IN)(RCP)(3 1)(C)	EA	4	ACTUAL	Two thousand ten DOLLARS AND zero CENTS	2 010 00	8,040 00
28	474	SLOT DRAIN (GAL STL)(12 IN)	LF	100	ACTUAL	One Hundred Fifty Four DOLLARS AND zero CENTS	154 00	15 400 00
29	474	SLOT DRAIN OUTFALL (GAL STL)(12 IN)	LF	7	ACTUAL	One hundred Fifty Four DOLLARS AND zero CENTS	154 00	1 078 00
30	479	ADJ MANHS (SANITARY)	EA	7	ACTUAL	Two Thousand Six Hundred DOLLARS AND zero CENTS	2 600 00	18 200 00
31	496	REMOV STR (INLET)	EA	3	ACTUAL	One hundred fifty seven DOLLARS AND zero CENTS	157 00	471 00
32	496	REMOV STR (SET)	EA	2	ACTUAL	One hundred five DOLLARS AND zero CENTS	105 00	210 00
33	496	REMOV STR (PIPE)	LF	925	ACTUAL	Ten DOLLARS AND zero CENTS	10 00	9 250 00
34	496	REMOV STR (SMALL FENCE)	LF	1145	ACTUAL	One DOLLARS AND twenty six CENTS	1 26	1,442 70
35	496	REMOV STR (WOOD STR)	EA	1	ACTUAL	One thousand two hundred sixty DOLLARS AND zero CENTS	1 260 00	1 260 00
36	500	MOBILIZATION (MAX 5%)	LS	1	ACTUAL	Eighty four thou one hd ninety seven DOLLARS AND sixty CENTS	84,197 60	84 197 60
37	502	BARRICADES SIGNS AND TRAFFIC HANDLING	MO	8	ACTUAL	Four thousand DOLLARS AND zero CENTS	4 000 00	32 000 00
38	506	ROCK FILTER DAMS (INSTALL) (TY 2)	LF	90	ACTUAL	Twenty DOLLARS AND zero CENTS	20 00	1,800 00

BID FORM
STEWART ROAD PAVING AND DRAINAGE IMPROVEMENT PROJECT
FROM 7 1/2 MILE ROAD TO COVE VIEW, GALVESTON, TEXAS

39	506	ROCK FILTER DAMS (REMOVE)	LF	90	ACTUAL	Five DOLLARS AND zero CENTS	5 00	450 00
40	506	CONSTRUCTION EXITS (INSTALL) (TY 2)	SY	156	ACTUAL	Fifteen DOLLARS AND zero CENTS	15 00	2,340 00
41	506	CONSTRUCTION EXITS (REMOVE)	SY	156	ACTUAL	Five DOLLARS AND zero CENTS	5 00	780 00
42	506	TEMPORARY SEDIMENT CONTROL FENCE	LF	2695	ACTUAL	One DOLLARS AND twenty six CENTS	1 26	3 395 70
43	506	TEMPORARY SEDIMENT CONTROL FENCE (REMOVE)	LF	2695	ACTUAL	Zero DOLLARS AND fifty CENTS	0 50	1 347 50
44	508	CONSTRUCTING DETOURS	SY	5325	ACTUAL	Thirty six DOLLARS AND zero CENTS	36 00	191,700 00
45	510	ONE-WAY TRAFFIC CONTROL	HR	120	ACTUAL	Fifty DOLLARS AND zero CENTS	50 00	6 000 00
46	540	MTL W-BEAM GD FEN (TIM POST)	LF	356 75	ACTUAL	Twenty six DOLLARS AND zero CENTS	26 00	9 262 50
47	544	GUARDRAIL END TREATMENT (INSTALL)	EA	2	ACTUAL	Two thousand six hundred DOLLARS AND zero CENTS	2,600 00	5 200 00
48	552	WIRE FENCE (TY D)	LF	1145	ACTUAL	Six DOLLARS AND fifty CENTS	6 50	7 442 50
49	560	MAILBOX INSTALL-S (TWC-POST) TY 2 END	EA	12	ACTUAL	One hundred twenty six DOLLARS AND zero CENTS	126 00	1 512 00
50	560	MAILBOX INSTALL-M (TWC-POST) TY 2 END	EA	2	ACTUAL	Three hundred twenty six DOLLARS AND zero CENTS	326 00	652 00
51	644	IN SM RD SN SUP&AM TY10BWG (1) SA (P)	EA	40	ACTUAL	Five hundred DOLLARS AND zero CENTS	500 00	20 000 00
52	644	IN SM RD SN SUP&AM TYTWT(1) WS (P)	EA	32	ACTUAL	Two hundred sixty DOLLARS AND zero CENTS	260 00	8,320 00
53	644	REMOVE SM RD SN SUP & AM	EA	17	ACTUAL	Sixty DOLLARS AND zero CENTS	60 00	1 020 00
54	658	INSTL DEL ASSM (D-DW) SZ 1 (FLX) GND	EA	12	ACTUAL	Fifty DOLLARS AND zero CENTS	50 00	600 00
55	658	INSTL OM ASSM (OM-2Z) (FLX) GND	EA	8	ACTUAL	Fifty DOLLARS AND zero CENTS	50 00	400 00
56	662	WK ZN PAV MRK REMOV (W) 4" (SLD)	LF	16823	PLANS	Zero DOLLARS AND thirty six CENTS	0 36	6,056 28
57	662	WK ZN PAV MRK REMOV (Y) 4" (SLD)	LF	21828	PLANS	Zero DOLLARS AND thirty six CENTS	0 36	7,858 08
58	666	REFL PAV MRK TY I (W) 4" (DOT) (200 MIL)	LF	128	PLANS	Zero DOLLARS AND fifty CENTS	0 50	64 00

BID FORM
STEWART ROAD PAVING AND DRAINAGE IMPROVEMENT PROJECT
FROM 7 1/2 MILE ROAD TO COVE VIEW, GALVESTON, TEXAS

59	666	REFL PAV MRK TY I (W) 4" (SLD) (100 MIL)	LF	10248	PLANS	Zero DOLLARS AND fifty CENTS	0 50	5 124 00
60	666	REFL PAV MRK TY I (W) 24" (SLD) (100 MIL)	LF	531	PLANS	Six DOLLARS AND zero CENTS	6 00	3 186 00
61	666	REFL PAV MRK TY I (W) (ARROW) (100 MIL)	EA	19	PLANS	One hundred DOLLARS AND zero CENTS	100 00	1,900 00
62	666	REFL PAV MRK TY I (W) (BIK ARW) (100 MIL)	EA	11	PLANS	Sixty DOLLARS AND zero CENTS	60 00	660 00
63	666	REFL PAV MRK TY I (W) (BIKE SYML) (100 MIL)	EA	12	PLANS	Eighty six DOLLARS AND zero CENTS	86 00	1 032 00
64	666	REFL PAV MRK TY I (W) (WORD) (100 MIL)	EA	5	PLANS	One hundred DOLLARS AND zero CENTS	100 00	500 00
65	666	REFL PAV MRK TY I (Y) 4" (BRK) (100 MIL)	LF	4228	PLANS	Zero DOLLARS AND fifty CENTS	0 50	2 114 00
66	666	REFL PAV MRK TY I (Y) 4" (SLD) (100 MIL)	LF	10729	PLANS	Zero DOLLARS AND fifty CENTS	0 50	5 364 50
67	666	REFL PAV MRK TY I (Y) 24" (SLD) (100 MIL)	LF	208	PLANS	Six DOLLARS AND zero CENTS	6 00	1,248 00
68	672	REFL PAV MRKR TY II A A	EA	318	PLANS	Four DOLLARS AND fifty CENTS	4 50	1 431 00
69	404, 407, 420 427, 441, 446, 740	RETAINING WALL	LF	555	ACTUAL	Five hundred DOLLARS AND zero CENTS	500 00	277,500 00

TOTAL BID Two million four hundred forty seven thousand eight hundred ten and 09/100 Dollars $2 447,810 09

NOTE All items of work required under this contract not specifically called for in the proposal as pay items shall be considered incidental to the various bid items and no separate payment shall be made for same

BID FORM - ALTERNATE WATERLINE BID
STEWART ROAD PAVING AND DRAINAGE IMPROVEMENT PROJECT
FROM 7 1/2 MILE ROAD TO COVE VIEW, GALVESTON, TEXAS

ITEM NO	SPEC NO	DESCRIPTION	UNIT	QNTY	MEASUREMENT	UNIT PRICE IN WORDS	UNIT PRICE	TOTAL PRICE
1	02664	Furnish and Install 8" PVC (AWWA C900) Class 150 DR 18 Waterline by Open Cut including Fittings, Thrust Blocking, Restrained Joints, and Appurtenances, Complete-in-Place, In Accordance with the Plans and Specifications	LF	260	ACTUAL	Seventy six DOLLARS AND zero CENTS	76 00	19 760 00
2	02664	Furnish and Install 16" PVC (AWWA C905) Class 235 DR 18 Waterline by Open Cut including Fittings, Thrust Blocking, Restrained Joints and Appurtenances, Complete-in-Place, In Accordance with the Plans and Specifications	LF	10	ACTUAL	Two hundred sixty five DOLLARS AND zero CENTS	265 00	10 600 00
3	02664	Furnish and Install 20" HDPE (AWWA C906) Waterline by Open Cut including Fittings, Thrust Blocking, Adapters and Appurtenances, Complete-in Place In Accordance with the Plans and Specifications	LF	4922	ACTUAL	One hundred five DOLLARS AND zero CENTS	105 00	516 705 00
4	02664	Trenchless Construction 20" HDPE (AWWA C906) Waterline including Access Pits and Appurtenances, Complete-in-Place, In Accordance with the Plans and Specifications	LF	115	ACTUAL	Three hundred DOLLARS AND zero CENTS	300 00	34,500 00
5	02664	Trenchless Construction 8" PVC (AWWA C900) Class 150, DR 18 Waterline including Access Pits Restrained Joints and Appurtenances, Complete-in-Place, In Accordance with the Plans and Specifications	LF	85	ACTUAL	Ninety Eight DOLLARS AND zero CENTS	98 00	8 330 00
6	01526	Trench Safety System Waterline Construction (All Depths), Complete in Place In Accordance with the Plans and Specifications	LF	5221	ACTUAL	One DOLLARS AND zero CENTS	1 00	5,221 00
7	02641	Furnish and Install 20" Butterfly Valve with Box, AWWA C504 NRS Complete-in Place, In Accordance with the Plans and Specifications	EA	5	ACTUAL	Thirteen thousand two hundred DOLLARS AND zero CENTS	13 200 00	66 000 00
8	02645	Furnish and Install Fire Hydrant Assembly, including Fire Hydrant, 6" Gate Valve with Box ALL DEPTHS Complete-in-Place In Accordance with the Plans and Specifications	EA	11	ACTUAL	Four thousand six hundred twenty five DOLLARS AND zero CENTS	4,625 00	50,875 00
9	02645	Furnish and Install Fire Hydrant Branch, ALL DEPTHS, Complete-in-Place, In Accordance with the Plans and Specifications	LF	70	ACTUAL	Twenty five DOLLARS AND zero CENTS	25 00	1 750 00
10	02645	Remove and Salvage Existing Fire Hydrant, Complete-in-Place, In Accordance with the Plans and Specifications	EA	1	ACTUAL	Two hundred twenty five DOLLARS AND zero CENTS	225 00	225 00
11	02667	Furnish and Install 8" Wet Connection, Complete-in-Place, In Accordance with the Plans and Specifications	EA	3	ACTUAL	One thousand DOLLARS AND zero CENTS	1 000 00	3 000 00
12	02667	Furnish and Install 16" Wet Connection, Complete in-Place In Accordance with the Plans and Specifications	EA	1	ACTUAL	One Thousand seven hundred DOLLARS AND zero CENTS	1,700 00	1 700 00

13	02667	Furnish and Install 20" Wet Connection, Complete-in-Place, In Accordance with the Plans and Specifications	EA	2	ACTUAL	Three Thousand Two Hundred DOLLARS AND zero CENTS	3,200 00	6 400 00
14	02669	Cut, Plug, and Abandon Existing 8" Water Main, Complete-in Place, In Accordance with the Plans and Specifications	EA	3	ACTUAL	Five Hundred DOLLARS AND zero CENTS	500 00	1 500 00
15	02669	Cut, Plug, and Abandon Existing 16 Water Main Complete-in Place In Accordance with the Plans and Specifications	EA	1	ACTUAL	One thousand two hundred DOLLARS AND zero CENTS	1,200 00	1 200 00
16	02669	Cut Plug, and Abandon Existing 20 Water Main, Complete-in Place In Accordance with the Plans and Specifications	EA	6	ACTUAL	One thousand nine hundred thirty five DOLLARS AND zero CENTS	1 935 00	11,610 00
17	01563	Furnish and Install Well Pointing, Complete-in-Place, In Accordance with the Plans and Specifications	LF	5221	ACTUAL	Twenty two DOLLARS AND zero CENTS (Min Bid Price $20/CY)	22 00	114 862 00
18	02665	Furnish and Install 3/4" - 1" Single Short Service Replacement Including Reconnect To Meter, Complete-in Place, In Accordance with the Plans and Specifications	EA	2	ACTUAL	Sixteen DOLLARS AND twenty CENTS	16 20	32 40
19	02665	Furnish and Install 3/4" - 1" Single Long Service Replacement Including Reconnect To Meter, Complete-in Place, In Accordance with the Plans and Specifications	EA	8	ACTUAL	One thousand nine hundred fifty DOLLARS AND zero CENTS	1 950 00	15 600 00
20	02665	Furnish and Install 1 1/2" - 2" Single Short Service Replacement Including Reconnect To Meter, Complete-in Place, In Accordance with the Plans and Specifications	EA	1	ACTUAL	One thousand nine hundred fifty DOLLARS AND zero CENTS	1 950 00	1,950 00
21	02665	Furnish and Install 1 1/2" - 2" Single Long Service Replacement Including Reconnect To Meter, Complete in Place In Accordance with the Plans and Specifications	EA	1	ACTUAL	Two Thousand Three hundred fifty DOLLARS AND zero CENTS	2 350 00	2,350 00
22	02228	Extra Special Excavation as directed by Owner s Representative, In Accordance with the Specifications	CY	100	ACTUAL	Twelve DOLLARS AND zero CENTS (Min Bid Price $10/CY)	12 00	1 200 00
23	02228	Extra Hand Excavation as Directed by Owner's Representative, In Accordance with the Specifications	CY	100	ACTUAL	Thirty DOLLARS AND zero CENTS (Min Bid Price $10/CY)	30 00	3,000 00
24	02228	Extra Machine Excavation as directed by Owner s Representative, In Accordance with the Specifications	CY	100	ACTUAL	Six DOLLARS AND zero CENTS (Min Bid Price $5/CY)	6 00	600 00
25	02228	Extra Placement of Special Backfill as directed by Owner's Representative, In Accordance with the Specifications	CY	150	ACTUAL	Twelve DOLLARS AND zero CENTS (Min Bid Price $15/CY)	12 00	1,800 00

26	02228	Extra Replacement of Material as directed by Owner s Representative In Accordance with the Specifications	CY	150	ACTUAL	Ten DOLLARS AND zero CENTS (Min Bid Price $10/CY)	10 00	1 500 00
27	02669	Grout Fill Abandoned 8" Waterline	LF	115	ACTUAL	Nine DOLLARS AND zero CENTS	9 00	1,035 00
28	02669	Grout Fill Abandoned 16 Waterline	LF	2085	ACTUAL	Ten DOLLARS AND zero CENTS	10 00	20 850 00
29	02669	Grout Fill Abandoned 20 Waterline	LF	2925	ACTUAL	Sixteen DOLLARS AND fifty CENTS	16 50	48 262 50
TOTAL ALTERNATE WATER LINE BID Nine hundred fifty two thousand four hundred seventeen dollars and 90/100							$952 417 90	

NOTE. All items of work required under this contract not specifically called for in the proposal as pay items shall be considered incidental to the various bid items and no separate payment shall be made for same

BID FORM - ALTERNATIVE BID
STEWART ROAD PAVING AND DRAINAGE IMPROVEMENT PROJECT
FROM 7 1/2 MILE ROAD TO COVE VIEW GALVESTON, TEXAS

ITEM NO	SPEC NO	DESCRIPTION	UNIT	QUANTITY	MEASUREMENT	UNIT PRICE IN WORDS	UNIT PRICE	TOTAL PRICE
2	467	SET(TYPE II)(18 IN)(RCP)(6:1)(P)	EA	32	ACTUAL	Four hundred DOLLARS AND zero CENTS	400 00	12,800 00
2	467	SET(TYPE II)(24 IN)(RCP)(6:1)(P)	EA	8	ACTUAL	Five hundred eighty DOLLARS AND zero Cents	580 00	4 640 00
TOTAL ALTERNATIVE BID Seventeen thousand four hundred forty dollars								$17,440 00

NOTE All items of work required under this contract not specifically called for in the proposal as pay items shall be considered incidental to the various bid items and no separate payment shall be made for same

State of Texas Tax Statement of Materials and other charges

The cost of in-place materials to be incorporated into the project	$ 1,653,600.00
The cost of labor, profit, materials not in-place and all other charges	$ 1,764,067.99
TOTAL (Must agree with bid)	$ 3,417,667.99

Proposal - Page 1
BID NUMBER B121027

BID PROPOSAL

The bidder hereby proposes to furnish all labor, material, equipment and incidentals for

Stewart Road Paving and Drainage Improvements from 7 ½ Mile Rd to Cove View

Enclosed is a Certified Check, Cashier's Check or Bid Bond in the sum of 5% of the greatest amount bid

Bidder agrees to perform in accordance with the requirements of the contract documents in consideration of payment by the County of the prices in this proposal

IN CASE OF DISCREPANCY BETWEEN UNIT PRICES AND EXTENDED PRICES, UNIT PRICES WILL GOVERN.

This bid sheet must be completely filled out in ink or typewritten with any necessary supplemental information attached.

The undersigned hereby agrees to all of the foregoing terms and provisions and to all terms and provisions of the contract, if awarded, which includes all provisions of Sections I - VI of this bid package

Note: All items of work required under this contract not specifically called for in the proposal as pay items shall be considered incidental to the various bid items and no separate payment shall be made for same.

BIDDER SER Construction Partners, LLC

SIGNATURE

PRINT NAME ROSBEL E. RAMOS

TITLE PRESIDENT + CEO

ADDRESS 3636 PASADENA BLVD

CITY, STATE PASADENA, TX

ZIP 77503

TELEPHONE (713) 473-7900

FAX NO (713) 473-7919

DATE 7/10/2012

ADDENDUM NO 3

BID FORM
STEWART ROAD PAVING AND DRAINAGE IMPROVEMENT PROJECT
FROM 7 1/2 MILE ROAD TO COVE VIEW, GALVESTON, TEXAS

ITEM NO	SPEC NO	DESCRIPTION	UNIT	QNTY	MEASUREMENT	UNIT PRICE IN WORDS	UNIT PRICE	TOTAL PRICE
1	100	PREPARING ROW	STA	49	ACTUAL	Thirty Nine Hundred DOLLARS AND NO CENTS	3,900 00	191,100.00
2	104	REMOVING CONC (DRIVEWAYS)	SY	134	PLANS	Six DOLLARS AND NO CENTS	6 00	804 00
3	110	EXCAVATION (ROADWAY)	CY	4683	PLANS	Seven DOLLARS AND NO CENTS	7 00	32,781 00
4	132	EMBANKMENT (FINAL)(DENS CONT)(TY C)	CY	7700	PLANS	Seven DOLLARS AND NO CENTS	7.00	53,900.00
5	161	COMPOST MANUF TOPSOIL (BIP) (4")	SY	30420	ACTUAL	NO DOLLARS AND Twenty CENTS	0.20	6,084.00
6	162	BLOCK SODDING	SY	2312	ACTUAL	Four DOLLARS AND NO CENTS	4 00	9,248 00
7	164	BROADCAST SEED (PERM)(RURAL)(SANDY)	SY	30217	ACTUAL	NO DOLLARS AND Thirty CENTS	0 30	9,065.10
8	260	LIME TRT (EXIST MATL) (8")	SY	27326	ACTUAL	One DOLLARS AND Ninety CENTS	1 90	51,919 40
9	260	LIME (HYD, COM OR QK) (SLURRY)	TON	273 3	ACTUAL	One Hundred Fifty Four DOLLARS AND NO CENTS	154.00	42,088 20
10	265	FLY ASH (CLASS CS)	TON	628.5	ACTUAL	Seventy DOLLARS AND NO CENTS	70 00	43,995 00
11	292	ASPHALT STAB BASE (GR 2) (PG 64)	TON	42 9	ACTUAL	One Hundred Fifty DOLLARS AND NO CENTS	150 00	6,435 00
12	305	SALV, HAUL & STKPL RCL APH PV (VAR DEPTH)	SY	14789	ACTUAL	Three DOLLARS AND Fourty CENTS	3.40	50,282 60
13	341	D-GR HMA (QCQA) TY D PG 70 22	TON	14 3	ACTUAL	One Hundred Seventy Five DOLLARS AND NO CENTS	175.00	2,502 50
14	360	CONC PVMT (CONT REINF-CRCP)(8")	SY	25151	ACTUAL	Thirty Eight DOLLARS AND NO CENTS	38 00	955,738 00
15	360	CONC PVMT (CONT REINF-CRCP)(6")	SY	1286	ACTUAL	Thirty Four DOLLARS AND Fifty CENTS	34 50	44,367 00
16	360	CONC PVMT (CONT REINF-CRCP)(7")	SY	841	ACTUAL	Thirty Nine DOLLARS AND NO CENTS	39 00	32,799.00
17	400	CEM STABIL BKFL	CY	613	PLANS	Fifty DOLLARS AND NO CENTS	50 00	30,650 00
18	432	RIPRAP (STONE)(COMMON)(DRY)(12 IN)	CY	7	ACTUAL	Fifty DOLLARS AND NO CENTS	50 00	350.00

BID FORM
STEWART ROAD PAVING AND DRAINAGE IMPROVEMENT PROJECT
FROM 7 1/2 MILE ROAD TO COVE VIEW, GALVESTON, TEXAS

19	432	RIPRAP (MOW STRIP)(4 IN)	CY	21	ACTUAL	Two Hundred Thirty DOLLARS AND No CENTS	230 00	4,830.00
20	432	RIRPAP (CONC)(CL B)(4')	CY	49	ACTUAL	Three Hundred Thirty DOLLARS AND No CENTS	330 00	16,170 00
21	464	RC PIPE (CL III)(18 IN)	LF	787	ACTUAL	Fourty Five DOLLARS AND No CENTS	45 00	35,415 00
22	464	RC PIPE (CL III)(24 IN)	LF	262	ACTUAL	Fifty DOLLARS AND No CENTS	50 00	13,100 00
23	464	RC PIPE (CL IV)(24 IN)	LF	114	ACTUAL	One Hundred Sixty DOLLARS AND No CENTS	160 00	18,240 00
24	464	RC PIPE (CL IV)(36 IN)	LF	136	ACTUAL	One Hundred Sixty DOLLARS AND No CENTS	160 00	21,760 00
25	465	INLET (COMPL)(TY H)	EA	3	ACTUAL	Eighteen Hundred DOLLARS AND No CENTS	1,800 00	5,400.00
26	467	SET(TY II)(24 IN)(RCP)(3 1)(C)	EA	8	ACTUAL	Seventeen Hundred DOLLARS AND No CENTS	1,700.00	13,600 00
27	467	SET(TY II)(36 IN)(RCP)(3 1)(C)	EA	4	ACTUAL	Twenty two Hundred DOLLARS AND No CENTS	2,200.00	8,800.00
28	474	SLOT DRAIN (GAL STL)(12 IN)	LF	100	ACTUAL	Thirty DOLLARS AND No CENTS	30.00	3,000 00
29	474	SLOT DRAIN OUTFALL (GAL STL)(12 IN)	LF	7	ACTUAL	Two Hundred Sixty DOLLARS AND No CENTS	260 00	1,820 00
30	479	ADJ MANHS (SANITARY)	EA	7	ACTUAL	Seven Hundred DOLLARS AND No CENTS	700.00	4,900.00
31	496	REMOV STR (INLET)	EA	3	ACTUAL	Two Hundred DOLLARS AND No CENTS	200 00	600.00
32	496	REMOV STR (SET)	EA	2	ACTUAL	Five Hundred DOLLARS AND No CENTS	500.00	1,000 00
33	496	REMOV STR (PIPE)	LF	925	ACTUAL	Thirteen DOLLARS AND No CENTS	13 00	12,025.00
34	496	REMOV STR (SMALL FENCE)	LF	1145	ACTUAL	Four DOLLARS AND No CENTS	4 00	4,580 00
35	496	REMOV STR (WOOD STR)	EA	1	ACTUAL	Two Thousand DOLLARS AND No CENTS	2,000.00	2,000 00
36	500	MOBILIZATION (MAX 5%)	LS	1	ACTUAL	One Hundred Sixty two Thousand DOLLARS AND No CENTS	162,000 00	162,000.00
37	502	BARRICADES SIGNS AND TRAFFIC HANDLING	MO	8	ACTUAL	Six Thousand DOLLARS AND No CENTS	6,000.00	48,000.00
38	506	ROCK FILTER DAMS (INSTALL) (TY 2)	LF	90	ACTUAL	Thirty DOLLARS AND No CENTS	30 00	2,700 00

BID FORM
STEWART ROAD PAVING AND DRAINAGE IMPROVEMENT PROJECT
FROM 7 1/2 MILE ROAD TO COVE VIEW, GALVESTON, TEXAS

39	506	ROCK FILTER DAMS (REMOVE)	LF	90	ACTUAL	Five DOLLARS AND NO CENTS	5 00	450 00
40	506	CONSTRUCTION EXITS (INSTALL) (TY 1)	SY	156	ACTUAL	Twenty Five DOLLARS AND NO CENTS	25 00	3,900 00
41	506	CONSTRUCTION EXITS (REMOVE)	SY	156	ACTUAL	Five DOLLARS AND NO CENTS	5 00	780 00
42	506	TEMPORARY SEDIMENT CONTROL FENCE	LF	2695	ACTUAL	Two DOLLARS AND NO CENTS	2 00	5,390 00
43	506	TEMPORARY SEDIMENT CONTROL FENCE (REMOVE)	LF	2695	ACTUAL	NO DOLLARS AND Thirty CENTS	0 30	808 50
44	508	CONSTRUCTING DETOURS	SY	5325	ACTUAL	Thirty Five DOLLARS AND NO CENTS	35 00	186,375 00
45	510	ONE-WAY TRAFFIC CONTROL	HR	120	ACTUAL	Fifty DOLLARS AND NO CENTS	50 00	6,000 00
46	540	MTL W BEAM GD FEN (TIM POST)	LF	356 25	ACTUAL	Thirty DOLLARS AND NO CENTS	30 00	10,687 50
47	544	GUARDRAIL END TREATMENT (INSTALL)	EA	2	ACTUAL	Twenty two Hundred DOLLARS AND NO CENTS	2,200 00	4,400 00
48	552	WIRE FENCE (TY D)	LF	1145	ACTUAL	Five DOLLARS AND NO CENTS	5 00	5,725 00
49	560	MAILBOX INSTALL-S (TWG-POST) TY 2 FND	EA	12	ACTUAL	One Hundred Fifty Four DOLLARS AND NO CENTS	154 00	1,848 00
50	560	MAILBOX INSTALL-M (TWG-POST) TY 2 FND	EA	2	ACTUAL	One Hundred Eighty Seven DOLLARS AND NO CENTS	187 00	374 00
51	644	IN SM RD SN SUP&AM TY10BWG (1) SA (P)	EA	40	ACTUAL	Three Hundred Thirty DOLLARS AND NO CENTS	330 00	13,200 00
52	644	IN SM RD SN SUP&AM TYTWT(1) WS (P)	EA	32	ACTUAL	Three Hundred Thirty DOLLARS AND NO CENTS	330 00	10,560 00
53	644	REMOVE SM RD SN SUP & AM	EA	17	ACTUAL	Sixty Five DOLLARS AND NO CENTS	65 00	1,105 00
54	658	INSTL DEL ASSM (D DW) SZ 1 (FLX) GND	EA	12	ACTUAL	Sixty Five DOLLARS AND NO CENTS	65 00	780 00
55	658	INSTL OM ASSM (OM 2Z) (FLX) GND	EA	8	ACTUAL	Seventy Seven DOLLARS AND NO CENTS	77 00	616 00
56	662	WK ZN PAV MRK REMOV (W) 4" (SLD)	LF	16823	PLANS	NO DOLLARS AND Sixty CENTS	0 60	10,093 80
57	662	WK ZN PAV MRK REMOV (Y) 4" (SLD)	LF	21828	PLANS	NO DOLLARS AND Sixty CENTS	0 60	13,096 80
58	666	REFL PAV MRK TY I (W) 4" (DOT) (100 MIL)	LF	128	PLANS	Two DOLLARS AND NO CENTS	2 00	256 00

BID FORM
STEWART ROAD PAVING AND DRAINAGE IMPROVEMENT PROJECT
FROM 7 1/2 MILE ROAD TO COVE VIEW, GALVESTON, TEXAS

59	666	REFL PAV MRK TY I (W) 4" (SLD) (100 MIL)	LF	10248	PLANS	DOLLARS AND NO Fourty CENTS	0 40	4,099 20
60	666	REFL PAV MRK TY I (W) 24" (SLD) (100 MIL)	LF	531	PLANS	DOLLARS AND Six NO CENTS	6.00	3,186.00
61	666	REFL PAV MRK TY I (W) (ARROW) (100 MIL)	EA	19	PLANS	DOLLARS AND One Hundred Thirty two NO CENTS	132 00	2,508 00
62	666	REFL PAV MRK TY I (W) (BIK ARW) (100 MIL)	EA	11	PLANS	DOLLARS AND One Hundred thirty two NO CENTS	132.00	1,452.00
63	666	REFL PAV MRK TY I (W) (BIKE SYML) (100 MIL)	EA	12	PLANS	DOLLARS AND One Hundred Fourty three NO CENTS	143.00	1,716.00
64	666	REFL PAV MRK TY I (W) (WORD) (100 MIL)	EA	5	PLANS	DOLLARS AND One Hundred thirty two NO CENTS	132.00	660 00
65	666	REFL PAV MRK TY I (Y) 4' (BRK) (100 MIL)	LF	4228	PLANS	DOLLARS AND NO Fifty CENTS	0 50	2,114 00
66	666	REFL PAV MRK TY I (Y) 4' (SLD) (100 MIL)	LF	10729	PLANS	DOLLARS AND NO Fourty CENTS	0.40	4,291 60
67	666	REFL PAV MRK TY I (Y) 24' (SLD) (100 MIL)	LF	208	PLANS	DOLLARS AND Six NO CENTS	6.00	1,248.00
68	672	REFL PAV MRKR TY II-A A	EA	318	PLANS	DOLLARS AND Four NO CENTS	4.00	1,272.00
69	404, 407, 420, 427 441, 446, 740	RETAINING WALL	LF	555	ACTUAL	DOLLARS AND Four Hundred Sixty NO CENTS	460.00	255,300.00
TOTAL BID								2,498,341 20

NOTE: All items of work required under this contract not specifically called for in the proposal as pay items shall be considered incidental to the various bid items and no separate payment shall be made for same

BID FORM - ALTERNATE WATERLINE BID
STEWART ROAD PAVING AND DRAINAGE IMPROVEMENT PROJECT
FROM 7 1/2 MILE ROAD TO COVE VIEW, GALVESTON, TEXAS

ITEM NO	SPEC NO	DESCRIPTION	UNIT	QNTY	MEASUREMENT	UNIT PRICE IN WORDS	UNIT PRICE	TOTAL PRICE
1	02664	Furnish and Install 8" PVC (AWWA C900) Class 150, DR 18 Waterline by Open Cut including Fittings, Thrust Blocking, Restrained Joints, and Appurtenances Complete-in-Place In Accordance with the Plans and Specifications	LF	250	ACTUAL	Sixty DOLLARS AND NO CENTS	60 00	15,000-00
2	02664	Furnish and Install 16" PVC (AWWA C905) Class 235 DR 18 Waterline by Open Cut including Fittings, Thrust Blocking, Restrained Joints and Appurtenances, Complete-in-Place, In Accordance with the Plans and Specifications	LF	40	ACTUAL	One Hundred Fifty DOLLARS AND No CENTS	150-00	6,000-00
3	02664	Furnish and Install 20" HDPE (AWWA C906) Waterline by Open Cut including Fittings Thrust Blocking, Adapters, and Appurtenances, Complete-in-Place, In Accordance with the Plans and Specifications	LF	4921	ACTUAL	Ninety three DOLLARS AND NO CENTS	93-00	457,653-00
4	02664	Trenchless Construction 20" HDPE (AWWA C906) Waterline including Access Pits and Appurtenances, Complete-in-Place, In Accordance with the Plans and Specifications	LF	115	ACTUAL	One Hundred Fifty DOLLARS AND NO CENTS	150-00	17,250-00
5	02664	Trenchless Construction 8 PVC (AWWA C900) Class 150 DR 18 Waterline including Access Pits, Restrained Joints and Appurtenances Complete-in-Place, In Accordance with the Plans and Specifications	LF	85	ACTUAL	One Hundred twenty DOLLARS AND NO CENTS	120 00	10,200-00
6	01526	Trench Safety System Waterline Construction (All Depth) Complete In Place, In Accordance with the Plans and Specifications	LF	5221	ACTUAL	NO DOLLARS AND ten CENTS	0 10	522 10
7	02641	Furnish and Install 20" Butterfly Valve with Box AWWA C504 NRS, Complete-in Place In Accordance with the Plans and Specifications	EA	5	ACTUAL	Seventy Five Hundred DOLLARS AND NO CENTS	7,500-00	37,500-00
8	02645	Furnish and Install Fire Hydrant Assembly including Fire Hydrant 6" Gate Valve with Box ALL DEPTHS, Complete in-Place, In Accordance with the Plans and Specifications	EA	11	ACTUAL	Fourty two Hundred DOLLARS AND NO CENTS	4,200 00	46,200-00
9	02645	Furnish and Install Fire Hydrant Branch, ALL DEPTHS, Complete-in-Place In Accordance with the Plans and Specifications	LF	70	ACTUAL	Twenty DOLLARS AND NO CENTS	20-00	1,400-00
10	02645	Remove and Salvage Existing Fire Hydrant Complete-in-Place In Accordance with the Plans and Specifications	EA	1	ACTUAL	Two Hundred DOLLARS AND NO CENTS	200 00	200-00
11	02667	Furnish and Install 8" Wet Connection Complete-in Place, In Accordance with the Plans and Specifications	EA	3	ACTUAL	Five Hundred DOLLARS AND NO CENTS	500 00	1,500 00
12	02667	Furnish and Install 16" Wet Connection, Complete-in-Place In Accordance with the Plans and Specifications	EA	1	ACTUAL	Eighteen Hundred DOLLARS AND NO CENTS	1,800 00	1,800-00

ADDENDUM NO 2

13	02667	Furnish and Install 20" Wet Connection, Complete In Place In Accordance with the Plans and Specifications	EA	2	ACTUAL	Twenty Five Hundred DOLLARS AND NO CENTS	2,500.00	5,000.00
14	02669	Cut, Plug, and Abandon Existing 8" Water Main, Complete-in Place In Accordance with the Plans and Specifications	EA	3	ACTUAL	Two Hundred Fifty DOLLARS AND NO CENTS	250.00	750.00
15	02669	Cut, Plug, and Abandon Existing 16" Water Main, Complete-in-Place, In Accordance with the Plans and Specifications	EA	1	ACTUAL	Three Hundred DOLLARS AND NO CENTS	300.00	300.00
16	02669	Cut, Plug and Abandon Existing 20" Water Main, Complete-in-Place, In Accordance with the Plans and Specifications	EA	6	ACTUAL	Eight Hundred DOLLARS AND NO CENTS	800.00	4,800.00
17	01563	Furnish and Install Well Pointing Complete-in-Place In accordance with the Plans and Specifications	LF	5221	ACTUAL	Twenty DOLLARS AND NO CENTS (Min Bid Price $20/CY)	20.00	104,420.00
18	02665	Furnish and Install 3/4" 1" Single Short Service Replacement Including Reconnect To Meter, Complete-in Place In Accordance with the Plans and Specifications	EA	2	ACTUAL	Seven Hundred DOLLARS AND NO CENTS	700.00	1,400.00
19	02665	Furnish and Install 3/4" 1" Single Long Service Replacement Including Reconnect To Meter Complete in Place In Accordance with the Plans and Specifications	EA	8	ACTUAL	Thirteen Hundred DOLLARS AND NO CENTS	1,300.00	10,400.00
20	02665	Furnish and Install 1 1/2 - 2 Single Short Service Replacement Including Reconnect To Meter Complete in Place, In Accordance with the Plans and Specifications	EA	1	ACTUAL	Sixteen Hundred DOLLARS AND NO CENTS	1,600.00	1,600.00
21	02665	Furnish and Install 1 1/2 - 2" Single Long Service Replacement Including Reconnect To Meter, Complete-in Place In Accordance with the Plans and Specifications	EA	1	ACTUAL	Twenty Five Hundred DOLLARS AND NO CENTS	2,500.00	2,500.00
22	02228	Extra Special Excavation as directed by Owner's Representative, In Accordance with the Specification	CY	100	ACTUAL	Ten DOLLARS AND NO CENTS (Min Bid Price $10/CY)	10.00	1,000.00
23	02228	Extra Hand Excavation as Directed by Owner's Representative, In Accordance with the Specifications	CY	100	ACTUAL	Ten DOLLARS AND NO CENTS (Min Bid Price $10/CY)	10.00	1,000.00
24	02228	Extra Machine Excavation as directed by Owner's Representative In Accordance with the Specifications	CY	100	ACTUAL	Five DOLLARS AND NO CENTS (Min Bid Price $5/CY)	5.00	500.00
25	02228	Extra Placement of Special Backfill as directed by Owner's Representative In Accordance with the Specifications	CY	150	ACTUAL	Fifteen DOLLARS AND NO CENTS (Min Bid Price $15/CY)	15.00	2,250.00

26	02228	Extra Replacement of Material as directed by Owner's Representative, In Accordance with the Specification	CY	150	ACTUAL	Ten DOLLARS AND NO CENTS (Min Bid Price $10/CY)	10.00	1,500.00
27	02669	Grout Fill Abandoned 8" Waterline	LF	115	ACTUAL	Ten DOLLARS AND NO CENTS	10.00	1,150.00
28	02669	Grout Fill Abandoned 16" Waterline	LF	2085	ACTUAL	Eight DOLLARS AND NO CENTS	8.00	16,680.00
29	02669	Grout Fill Abandoned 20" Waterline	LF	2925	ACTUAL	Fifteen DOLLARS AND NO CENTS	15.00	43,875.00
TOTAL ALTERNATE WATER LINE BID							794,950.10	

NOTE: All items of work required under this contract not specifically called for in the proposal as pay items shall be considered incidental to the various bid items and no separate payment shall be made for same

Proposal - Page

State of Texas Tax Statement of Materials and other charges

The cost of in-place materials to be incorporated into the project $ 2,293,291 30

The cost of labor, profit, materials not in-place and all other charges $ 1,000,000 00

TOTAL (Must agree with bid) $ 3,293,291 30

BID NUMBER B121027

BID PROPOSAL

The bidder hereby proposes to furnish all labor, material, equipment and incidentals for

Stewart Road Paving and Drainage Improvements from 7 ½ Mile Rd to Cove View

Enclosed is a Certified Check, Cashier's Check or Bid Bond in the sum of 5% of the greatest amount bid

Bidder agrees to perform in accordance with the requirements of the contract documents in consideration of payment by the County of the prices in this proposal.

IN CASE OF DISCREPANCY BETWEEN UNIT PRICES AND EXTENDED PRICES, UNIT PRICES WILL GOVERN.

This bid sheet must be completely filled out in ink or typewritten with any necessary supplemental information attached.

The undersigned hereby agrees to all of the foregoing terms and provisions and to all terms and provisions of the contract, if awarded, which includes all provisions of Sections I - VI of this bid package.

Note: All items of work required under this contract not specifically called for in the proposal as pay items shall be considered incidental to the various bid items and no separate payment shall be made for same.

BIDDER Metro City Construction, L.P.

SIGNATURE

PRINT NAME Robert N Smither

TITLE Chief Estimator

ADDRESS 5715 Luce Street

CITY, STATE Houston Texas

ZIP 77087

TELEPHONE 713-943-0090

FAX NO 713-943-0092

DATE 7/10/2012

ADDENDUM NO 3

BID FORM
STEWART ROAD PAVING AND DRAINAGE IMPROVEMENT PROJECT
FROM 7 1/2 MILE ROAD TO COVE VIEW, GALVESTON, TEXAS

ITEM NO	SPEC NO	DESCRIPTION	UNIT	QNTY	MEASUREMENT	UNIT PRICE IN WORDS	UNIT PRICE	TOTAL PRICE
1	100	PREPARING ROW	STA	49	ACTUAL	Twenty Eight Hundred DOLLARS AND No CENTS	2,800 00	137,200 00
2	104	REMOVING CONC (DRIVEWAYS)	SY	134	PLANS	Eleven DOLLARS AND No CENTS	11 00	1,474 00
3	110	EXCAVATION (ROADWAY)	CY	4683	PLANS	Eight DOLLARS AND No CENTS	8 00	37,464 00
4	132	EMBANKMENT (FINAL)(DENS CONT)(TY C)	CY	7700	PLANS	Fifteen DOLLARS AND No CENTS	15 00	115,500 00
5	161	COMPOST MANUF TOPSOIL (BIP) (4")	SY	30420	ACTUAL	Seven DOLLARS AND No CENTS	7 00	212,940 00
6	162	BLOCK SODDING	SY	2312	ACTUAL	Four DOLLARS AND No CENTS	4 00	9,248 00
7	164	BROADCAST SEED (PERM)(RURAL)(SANDY)	SY	30217	ACTUAL	No DOLLARS AND Twenty CENTS	0 20	6,043 40
8	260	LIME TRT (EXIST MATL) (8")	SY	27326	ACTUAL	Two DOLLARS AND Fifty CENTS	2 50	68,315 00
9	260	LIME (HYD, COM OR QK) (SLURRY)	TON	273 3	ACTUAL	One Hundred Sixty Five DOLLARS AND No CENTS	165 00	45,094 50
10	265	FLY ASH (CLASS CS)	TON	628 5	ACTUAL	Seventy Five DOLLARS AND No CENTS	75 000	46,137 50
11	292	ASPHALT STAB BASE (GR 2) (PG 64)	TON	42.9	ACTUAL	One Hundred Ten DOLLARS AND No CENTS	110 00	4,719 00
12	305	SALV, HAUL & STKPL RCL APH PV (VAR DEPTH)	SY	14789	ACTUAL	Eleven DOLLARS AND No CENTS	11 00	162,679 00
13	341	D-GR HMA (QCQA) TY-D PG 70 22	TON	14 3	ACTUAL	Two Hundred DOLLARS AND No CENTS	200 00	2,860 00
14	360	CONC PVMT (CONT REINF-CRCP)(8 ')	SY	25151	ACTUAL	Forty Nine DOLLARS AND No CENTS	49 00	1,232,399 00
15	360	CONC PVMT (CONT REINF CRCP)(6")	SY	1286	ACTUAL	Forty Four DOLLARS AND No CENTS	44 00	56,584 00
16	360	CONC PVMT (CONT REINF-CRCP)(7")	SY	841	ACTUAL	Forty Six DOLLARS AND Seventy CENTS	46 70	39,274 70
17	400	CEM STABIL BKFL	CY	613	PLANS	Thirty Five DOLLARS AND No CENTS	35 00	21,455 00
18	432	RIPRAP (STONE)(COMMON)(DRY)(12 IN)	CY	7	ACTUAL	One Hundred Twenty DOLLARS AND No CENTS	120 00	840 00

BID FORM
STEWART ROAD PAVING AND DRAINAGE IMPROVEMENT PROJECT
FROM 7 1/2 MILE ROAD TO COVE VIEW, GALVESTON, TEXAS

59	666	REFL PAV MRK TY I (W) 4" (SLD) (100 MIL)	LF	10248	PLANS	No DOLLARS AND Fifty CENTS	0 50	5,124 00
60	666	REFL PAV MRK TY I (W) 24" (SLD) (100 MIL)	LF	531	PLANS	Six DOLLARS AND Twenty Five CENTS	6 25	3,318 75
61	666	REFL PAV MRK TY I (W) (ARROW) (100 MIL)	EA	19	PLANS	One Hundred Forty One DOLLARS AND No CENTS	141 00	2,679 00
62	666	REFL PAV MRK TY I (W) (BIK ARW) (100 MIL)	EA	11	PLANS	One Hundred Forty One DOLLARS AND No CENTS	141 00	1,551 00
63	666	REFL PAV MRK TY I (W) (BIKE SYML) (100 MIL)	EA	12	PLANS	One Hundred Fifty Three DOLLARS AND No CENTS	153 00	1,636 00
64	666	REFL PAV MRK TY I (W) (WORD) (100 MIL)	EA	5	PLANS	One Hundred Forty One DOLLARS AND No CENTS	141 00	705 00
65	666	REFL PAV MRK TY I (Y) 4" (BRK) (100 MIL)	LF	4228	PLANS	No DOLLARS AND Fifty CENTS	0 50	2,114 00
66	666	REFL PAV MRK TY I (Y) 4" (SLD) (100 MIL)	LF	10729	PLANS	No DOLLARS AND Fifty CENTS	0 50	5,364 50
67	666	REFL PAV MRK TY I (Y) 24" (SLD) (100 MIL)	LF	208	PLANS	Six DOLLARS AND No CENTS	6 00	1,248 00
68	672	REFL PAV MRKR TY II-A-A	EA	318	PLANS	Four DOLLARS AND No CENTS	4 00	1,272 00
69	404 407, 420, 427, 441 446, 740	RETAINING WALL	LF	555	ACTUAL	Seven Hundred Fifty Five DOLLARS AND NO CENTS	755 00	419,025.00
TOTAL BID								3,414,012.00

NOTE All items of work required under this contract not specifically called for in the proposal as pay items shall be considered incidental to the various bid items and no separate payment shall be made for same

ADDENDUM NO 2

BID FORM - ALTERNATE WATERLINE BID
STEWART ROAD PAVING AND DRAINAGE IMPROVEMENT PROJECT
FROM 7 1/2 MILE ROAD TO COVE VIEW, GALVESTON, TEXAS

ITEM NO	SPEC NO	DESCRIPTION	UNIT	QNTY	MEASUREMENT	UNIT PRICE IN WORDS	UNIT PRICE	TOTAL PRICE
1	02664	Furnish and Install 8" PVC (AWWA C900) Class 150, DR 18 Waterline by Open Cut including Fittings, Thrust Blocking, Restrained Joints, and Appurtenances Complete-in-Place, In Accordance with the Plans and Specifications	LF	260	ACTUAL	Eighty Seven DOLLARS AND No CENTS	87 00	22,620 00
2	02664	Furnish and Install 16" PVC (AWWA C905) Class 235 DR 18 Waterline by Open Cut including Fittings, Thrust Blocking, Restrained Joints, and Appurtenances Complete-in-Place In Accordance with the Plans and Specifications	LF	40	ACTUAL	One Hundred Eighty Seven DOLLARS AND No CENTS	187 00	7,480 00
3	02664	Furnish and Install 20" HDPE (AWWA C906) Waterline by Open Cut including Fittings, Thrust Blocking, Adapters, and Appurtenances Complete-in-Place, In Accordance with the Plans and Specifications	LF	4921	ACTUAL	One Hundred Fifty Two DOLLARS AND No CENTS	152 00	747,992 00
4	02664	Trenchless Construction 20" HDPE (AWWA C906) Waterline including Access Pits and Appurtenances, Complete-in-Place, In Accordance with the Plans and Specifications	LF	115	ACTUAL	One Hundred Twenty DOLLARS AND No CENTS	120 00	13,800 00
5	02664	Trenchless Construction 8" PVC (AWWA C900) Class 150, DR 18 Waterline including Access Pits, Restrained Joints and Appurtenances, Complete-in-Place, In Accordance with the Plans and Specifications	LF	85	ACTUAL	Seventy DOLLARS AND No CENTS	70 00	5,950 00
6	01526	Trench Safety System Waterline Construction (All Depths), Complete-in-Place, In Accordance with the Plans and Specifications	LF	5221	ACTUAL	One DOLLARS AND No CENTS	1 00	5,221 00
7	02641	Furnish and Install 20" Butterfly Valve with Box, AWWA C504 NRS, Complete-in Place, In Accordance with the Plans and Specifications	EA	5	ACTUAL	Ten Thousand DOLLARS AND No CENTS	10,000 00	50,000 00
8	02645	Furnish and Install Fire Hydrant Assembly including Fire Hydrant, 6" Gate Valve with Box, ALL DEPTHS Complete-in Place, In Accordance with the Plans and Specifications	EA	11	ACTUAL	Forty Six Hundred Fifty DOLLARS AND No CENTS	4,650 00	51,150 00
9	02645	Furnish and Install Fire Hydrant Branch, ALL DEPTHS Complete-in-Place In Accordance with the Plans and Specifications	LF	70	ACTUAL	Thirty DOLLARS AND No CENTS	30 00	2,100 00
10	02645	Remove and Salvage Existing Fire Hydrant, Complete-in-Place, In Accordance with the Plans and Specifications	EA	1	ACTUAL	One Hundred Twenty DOLLARS AND No CENTS	120 00	120 00
11	02667	Furnish and Install 8" Wet Connection Complete-in-Place, In Accordance with the Plans and Specifications	EA	3	ACTUAL	Nine Hundred Thirty DOLLARS AND No CENTS	930 00	2,790 00
12	02667	Furnish and Install 16" Wet Connection Complete in-Place, In Accordance with the Plans and Specifications	EA	1	ACTUAL	Three Thousand DOLLARS AND No CENTS	3,000 00	3,000 00

ADDENDUM NO 2

13	02667	Furnish and Install 20" Wet Connection, Complete-in-Place, In Accordance with the Plans and Specifications	EA	2	ACTUAL	Six Thousand DOLLARS AND No CENTS	6,000 00	12,000 00
14	02669	Cut, Plug, and Abandon Existing 8" Water Main, Complete in-Place, In Accordance with the Plans and Specifications	EA	3	ACTUAL	Two Hundred Fifty DOLLARS AND No CENTS	250 00	750 00
15	02669	Cut, Plug, and Abandon Existing 16" Water Main, Complete-in-Place In Accordance with the Plans and Specifications	EA	1	ACTUAL	Nine Hundred Twenty DOLLARS AND No CENTS	920 00	920 00
16	02669	Cut, Plug, and Abandon Existing 20" Water Main, Complete-in-Place In Accordance with the Plans and Specifications	EA	6	ACTUAL	Sixteen Hundred Sixty DOLLARS AND No CENTS	1,660 00	9,960 00
17	01563	Furnish and Install Well Pointing, Complete-in-Place, In Accordance with the Plans and Specifications	LF	5221	ACTUAL	Twenty Eight DOLLARS AND No CENTS (Min Bid Price $20/CY)	28 00	146,188 00
18	02665	Furnish and Install 3/4" 1" Single Short Service Replacement Including Reconnect To Meter Complete-in Place, In Accordance with the Plans and Specifications	EA	2	ACTUAL	Four Hundred Thirty Three DOLLARS AND No CENTS	433 00	866 00
19	02665	Furnish and Install 3/4" - 1" Single Long Service Replacement Including Reconnect To Meter, Complete-in Place, In Accordance with the Plans and Specifications	EA	8	ACTUAL	Eleven Hundred DOLLARS AND No CENTS	1,100 00	1,100 00
20	02665	Furnish and Install 1 1/2" 2" Single Short Service Replacement Including Reconnect To Meter, Complete-in Place, In Accordance with the Plans and Specifications	EA	1	ACTUAL	Eight Hundred Sixteen DOLLARS AND No CENTS	816 00	816 00
21	02665	Furnish and Install 1 1/2" - 2" Single Long Service Replacement Including Reconnect To Meter, Complete in Place In Accordance with the Plans and Specifications	EA	1	ACTUAL	Nineteen Hundred Forty Four DOLLARS AND No CENTS	1,944 00	1,944 00
22	02228	Extra Special Excavation as directed by Owner's Representative, In Accordance with the Specifications	CY	100	ACTUAL	Ten DOLLARS AND No CENTS (Min Bid Price $10/CY)	10 00	1,000 00
23	02228	Extra Hand Excavation as Directed by Owner's Representative, In Accordance with the Specifications	CY	100	ACTUAL	Ten DOLLARS AND No CENTS (Min Bid Price $10/CY)	10 00	1,000 00
24	02228	Extra Machine Excavation as directed by Owner's Representative, In Accordance with the Specifications	CY	100	ACTUAL	Five DOLLARS AND No CENTS (Min Bid Price $5/CY)	5 00	500 00
25	02228	Extra Placement of Special Backfill as directed by Owner's Representative, In Accordance with the Specifications	CY	150	ACTUAL	Fifteen DOLLARS AND No CENTS (Min Bid Price $15/CY)	15 00	2,250 00

26	02228	Extra Replacement of Material as directed by Owner's Representative, In Accordance with the Specifications	CY	150	ACTUAL	Ten DOLLARS AND No CENTS (Min Bid Price $10/CY)	10 00	1,500 00
27	02669	Grout Fill Abandoned 8" Waterline	LF	115	ACTUAL	Four DOLLARS AND Fifty CENTS	4 50	517 50
28	02669	Grout Fill Abandoned 16" Waterline	LF	2085	ACTUAL	Ten DOLLARS AND No CENTS	10 00	20,850 00
29	02669	Grout Fill Abandoned 20" Waterline	LF	2925	ACTUAL	Thirteen DOLLARS AND No CENTS	13 00	38,025 00
TOTAL ALTERNATE WATER LINE BID								1,160,109.50

NOTE: All items of work required under this contract not specifically called for in the proposal as pay items shall be considered incidental to the various bid items and no separate payment shall be made for same

BID FORM
STEWART ROAD PAVING AND DRAINAGE IMPROVEMENT PROJECT
FROM 7 1/2 MILE ROAD TO COVE VIEW, GALVESTON, TEXAS

19	432	RIPRAP (MOW STRIP)(4 IN)	CY	21	ACTUAL	One Thousand Fifty DOLLARS AND No CENTS	1,050 00	22,050 00
20	432	RIRPAP (CONC)(CL B)(4")	CY	49	ACTUAL	Fifteen Hundred Fity DOLLARS AND No CENTS	1,550 00	75,950 00
21	464	RC PIPE (CL III)(18 IN)	LF	787	ACTUAL	Fifty Four DOLLARS AND No CENTS	54 00	42,498 00
22	464	RC PIPE (CL III)(24 IN)	LF	262	ACTUAL	Sixty Six DOLLARS AND No CENTS	66 00	17,292 00
23	464	RC PIPE (CL IV)(24 IN)	LF	114	ACTUAL	Sixty Six DOLLARS AND No CENTS	66 00	7,524 00
24	464	RC PIPE (CL IV)(36 IN)	LF	136	ACTUAL	One Hundred Fifty Four DOLLARS AND No CENTS	154 00	20,944 00
25	465	INLET (COMPL)(TY H)	EA	3	ACTUAL	Two Thousand Five DOLLARS AND No CENTS	2,005 00	6,015 00
26	467	SET(TY II)(24 IN)(RCP)(3 1)(C)	EA	8	ACTUAL	Six Hundred Eighty DOLLARS AND No CENTS	680 00	5,440 00
27	467	SET(TY II)(36 IN)(RCP)(3 1)(C)	EA	4	ACTUAL	One Thousand Thirty DOLLARS AND No CENTS	1,030 00	4,120 00
28	474	SLOT DRAIN (GAL STL)(12 IN)	LF	100	ACTUAL	One Hundred DOLLARS AND No CENTS	100 00	10,000 00
29	474	SLOT DRAIN OUTFALL (GAL STL)(12 IN)	LF	7	ACTUAL	Fifty DOLLARS AND No CENTS	50 00	350 00
30	479	ADJ MANHS (SANITARY)	EA	7	ACTUAL	Three Hundred DOLLARS AND No CENTS	300 00	2,100 00
31	496	REMOV STR (INLET)	EA	3	ACTUAL	Two Hundred Fifty DOLLARS AND No CENTS	250 00	750 00
32	496	REMOV STR (SET)	EA	2	ACTUAL	One Hundred DOLLARS AND No CENTS	100 00	200 00
33	496	REMOV STR (PIPE)	LF	925	ACTUAL	Five DOLLARS AND No CENTS	5 00	4,625 00
34	496	REMOV STR (SMALL FENCE)	LF	1145	ACTUAL	One DOLLARS AND No CENTS	1 00	1,145 00
35	496	REMOV STR (WOOD STR)	EA	1	ACTUAL	Two Hundred Fifty DOLLARS AND No CENTS	250 00	250 00
36	500	MOBILIZATION (MAX 5%)	LS	1	ACTUAL	One Hundred Eighty Thousand Five Hundred Sixty Five DOLLARS AND Fifteen CENTS	180,565 15	180,565 15
37	502	BARRICADES, SIGNS AND TRAFFIC HANDLING	MO	8	ACTUAL	Twenty Four Hundred DOLLARS AND No CENTS	2,400 00	19,200 00
38	506	ROCK FILTER DAMS (INSTALL) (TY 2)	LF	90	ACTUAL	Sixty DOLLARS AND No CENTS	60 00	5,400 00

BID FORM
STEWART ROAD PAVING AND DRAINAGE IMPROVEMENT PROJECT
FROM 7 1/2 MILE ROAD TO COVE VIEW, GALVESTON, TEXAS

39	506	ROCK FILTER DAMS (REMOVE)	LF	90	ACTUAL	One DOLLARS AND No CENTS	1 00	90 00
40	506	CONSTRUCTION EXITS (INSTALL) (TY 1)	SY	156	ACTUAL	Thirteen DOLLARS AND No CENTS	13 00	2,028 00
41	506	CONSTRUCTION EXITS (REMOVE)	SY	156	ACTUAL	Two DOLLARS AND No CENTS	2 00	312 00
42	506	TEMPORARY SEDIMENT CONTROL FENCE	LF	2695	ACTUAL	One DOLLARS AND Fifty CENTS	1 50	4,042 50
43	506	TEMPORARY SEDIMENT CONTROL FENCE (REMOVE)	LF	2695	ACTUAL	No DOLLARS AND Thirty CENTS	0 30	808 50
44	508	CONSTRUCTING DETOURS	SY	5325	ACTUAL	Forty Five DOLLARS AND No CENTS	45 00	239,625 00
45	510	ONE-WAY TRAFFIC CONTROL	HR	120	ACTUAL	One Hundred Thirty DOLLARS AND No CENTS	130 00	15,600 00
46	540	MTL W-BEAM GD FEN (TIM POST)	LF	356 25	ACTUAL	Twenty Eight DOLLARS AND No CENTS	28 00	9,975 00
47	544	GUARDRAIL END TREATMENT (INSTALL)	EA	2	ACTUAL	Twenty Six Hundred DOLLARS AND No CENTS	2,600 00	5,200 00
48	552	WIRE FENCE (TY D)	LF	1145	ACTUAL	Nine DOLLARS AND Fifty CENTS	9 50	10,877 50
49	560	MAILBOX INSTALL-S (TWG-POST) TY 2 FND	EA	12	ACTUAL	One Hundred Sixty Five DOLLARS AND No CENTS	165 00	1,980 00
50	560	MAILBOX INSTALL-M (TWG-POST) TY 2 FND	EA	2	ACTUAL	Two Hundred DOLLARS AND No CENTS	200 00	400 00
51	644	IN SM RD SN SUP&AM TY10BWG (1) SA (P)	EA	40	ACTUAL	Three Hundred Fity DOLLARS AND No CENTS	350 00	14,000 00
52	644	IN SM RD SN SUP&AM TYTWT(1) WS (P)	EA	32	ACTUAL	Three Hundred Fity DOLLARS AND No CENTS	350 00	11,200 00
53	644	REMOVE SM RD SN SUP & AM	EA	17	ACTUAL	Seventy DOLLARS AND No CENTS	70 00	1,190 00
54	658	INSTL DEL ASSM (D-DW) SZ 1 (FLX) GND	EA	12	ACTUAL	Sixty Five DOLLARS AND No CENTS	65 00	780 00
55	658	INSTL OM ASSM (OM-2Z) (FLX) GND	EA	8	ACTUAL	Eight Three DOLLARS AND No CENTS	83 00	664 00
56	662	WK ZN PAV MRK REMOV (W) 4" (SLD)	LF	16823	PLANS	No DOLLARS AND Sixty CENTS	0 60	10,093 80
57	662	WK ZN PAV MRK REMOV (Y) 4" (SLD)	LF	21828	PLANS	No DOLLARS AND Sixty CENTS	0 60	13,096 80
58	666	REFL PAV MRK TY I (W) 4" (DOT) (100 MIL)	LF	128	PLANS	One DOLLARS AND Thirty CENTS	1 30	166 40

Proposal - Page

State of Texas Tax Statement of Materials and other charges

The cost of in-place materials to be incorporated into the project $ 1,933,159 83

The cost of labor, profit, materials not in-place and all other charges $ 2,669,601.67

TOTAL: (Must agree with bid) $ 4,602,761.50

THE COUNTY OF
GALVESTON
Office of the County Engineer
722 MOODY, 1st FLOOR
GALVESTON, TX 77550
(409) 770-5399 (409) 770-5549 (281) 316-8300
FAX (409) 770-5559

Transmittal

To: **Patricia Grady**

From: Mike Fitzgerald

Date: September 4, 2012

Re: Stewart Road Paving & Drainage Improvements Project from 7 ½ Mile Rd to Cove View

Cc: Dwight Sullivan

On August 21, 2012 the Commissioners' Court (agenda item no 30a1) awarded the above referenced project

Please have the Judge sign all four contracts in the place indicated Please let me know when they are ready, we will pick them up and deliver them to the County Clerk

COUNTY OF GALVESTON

SPECIFICATIONS AND CONTRACT DOCUMENTS

STEWART ROAD PAVING AND DRAINAGE IMPROVEMENTS PROJECT FROM 7 ½ MILE ROAD TO COVE VIEW

JUNE 2012

ACORD®

CERTIFICATE OF LIABILITY INSURANCE

DATE (MM/DD/YYYY) 8/28/2012

THIS CERTIFICATE IS ISSUED AS A MATTER OF INFORMATION ONLY AND CONFERS NO RIGHTS UPON THE CERTIFICATE HOLDER THIS CERTIFICATE DOES NOT AFFIRMATIVELY OR NEGATIVELY AMEND, EXTEND OR ALTER THE COVERAGE AFFORDED BY THE POLICIES BELOW THIS CERTIFICATE OF INSURANCE DOES NOT CONSTITUTE A CONTRACT BETWEEN THE ISSUING INSURER(S), AUTHORIZED REPRESENTATIVE OR PRODUCER, AND THE CERTIFICATE HOLDER.

IMPORTANT If the certificate holder is an ADDITIONAL INSURED, the policy(ies) must be endorsed If SUBROGATION IS WAIVED, subject to the terms and conditions of the policy, certain policies may require an endorsement A statement on this certificate does not confer rights to the certificate holder in lieu of such endorsement(s)

PRODUCER
Hotchkiss Insurance Agency, LLC - Houston
13105 NW Freeway, Suite 850
Houston TX 77040-6312

CONTACT NAME Certificates Houston
PHONE (A/C, No, Ext) 713-956-9800 FAX (A/C, No) 713-956-0331
E-MAIL ADDRESS certsh@hiallc.com

INSURER(S) AFFORDING COVERAGE	NAIC #
INSURER A Allied Property & Casualty	42579
INSURER B Texas Mutual Insurance Co	22945
INSURER C	
INSURER D	
INSURER E	
INSURER F	

INSURED LUCAS-1
RW Lucas Construction, LLC
Lucas Construction Company,Inc
551 League City Pkwy, #C
League City TX 77573-5429

COVERAGES CERTIFICATE NUMBER 1107223039 REVISION NUMBER

THIS IS TO CERTIFY THAT THE POLICIES OF INSURANCE LISTED BELOW HAVE BEEN ISSUED TO THE INSURED NAMED ABOVE FOR THE POLICY PERIOD INDICATED NOTWITHSTANDING ANY REQUIREMENT TERM OR CONDITION OF ANY CONTRACT OR OTHER DOCUMENT WITH RESPECT TO WHICH THIS CERTIFICATE MAY BE ISSUED OR MAY PERTAIN THE INSURANCE AFFORDED BY THE POLICIES DESCRIBED HEREIN IS SUBJECT TO ALL THE TERMS EXCLUSIONS AND CONDITIONS OF SUCH POLICIES LIMITS SHOWN MAY HAVE BEEN REDUCED BY PAID CLAIMS

INSR LTR	TYPE OF INSURANCE	ADDL INSR	SUBR WVD	POLICY NUMBER	POLICY EFF (MM/DD/YYYY)	POLICY EXP (MM/DD/YYYY)	LIMITS	
A	GENERAL LIABILITY X COMMERCIAL GENERAL LIABILITY CLAIMS-MADE X OCCUR GEN L AGGREGATE LIMIT APPLIES PER POLICY X PRO-JECT LOC			ACPGLPO7252694793	7/31/2012	7/31/2013	EACH OCCURRENCE DAMAGE TO RENTED PREMISES (Ea occurrence) MED EXP (Any one person) PERSONAL & ADV INJURY GENERAL AGGREGATE PRODUCTS COMP/OP AGG $	$1 000 000 $100 000 $5,000 $1 000 000 $2 000,000 $2 000,000
A	AUTOMOBILE LIABILITY X ANY AUTO ALL OWNED AUTOS SCHEDULED AUTOS X HIRED AUTOS X NON-OWNED AUTOS			ACPBAPC7252694793	7/31/2012	7/31/2013	COMBINED SINGLE LIMIT (Ea accident) BODILY INJURY (Per person) BODILY INJURY (Per accident) PROPERTY DAMAGE (Per accident) $	$1,000 000 $ $ $ $
A	UMBRELLA LIAB X OCCUR X EXCESS LIAB CLAIMS-MADE DED X RETENTION $0			ACPCAD7252694793	7/31/2012	7/31/2013	EACH OCCURRENCE AGGREGATE $	$8 000 000 $8 000,000
B	WORKERS COMPENSATION AND EMPLOYERS LIABILITY ANY PROPRIETOR/PARTNER/EXECUTIVE OFFICER/MEMBER EXCLUDED? Y/N (Mandatory in NH) If yes describe under DESCRIPTION OF OPERATIONS below		N/A	TSF0001182104	7/31/2012	7/31/2013	X WC STATU-TORY LIMITS OTH-ER E L EACH ACCIDENT E L DISEASE - EA EMPLOYEE E L DISEASE - POLICY LIMIT	$1 000 000 $1 000 000 $1 000 000
A	Equipment Floater Special inc Theft $1 000 Deductible			ACPCIMP7242694793	7/31/2012	7/31/2013	Leased/Rented Scheduled Equipment	400 000 5 201 620

DESCRIPTION OF OPERATIONS / LOCATIONS / VEHICLES (Attach ACORD 101, Additional Remarks Schedule, if more space is required)

The general liability & auto policy includes a blanket additional insured endorsement (GL Form CG7246 & CG7157 0910) that provides additional insured status when required by written contract The general liability, auto and workers compensation policies includes a blanket waiver of subrogation endorsement when required by written contract The certificate holder is named as loss payee with regards to the equipment floater policy as their interest may appear The general liability policy includes a special endorsement with Primary and Noncontributory wording The umbrella/excess will follow the underlying liability coverage forms, subject to the policy terms and conditions RE Stewart Road Paving Draining Improvements from 7 1/2 mile road to cove view

CERTIFICATE HOLDER

Galveston County Texas Galveston County Courthouse
722 Moody Ave, 5th Floor
Galveston TX 77550-2318

CANCELLATION

SHOULD ANY OF THE ABOVE DESCRIBED POLICIES BE CANCELLED BEFORE THE EXPIRATION DATE THEREOF, NOTICE WILL BE DELIVERED IN ACCORDANCE WITH THE POLICY PROVISIONS

AUTHORIZED REPRESENTATIVE

© 1988-2010 ACORD CORPORATION All rights reserved

The ACORD name and logo are registered marks of ACORD

STATUTORY PERFORMANCE BOND - TEXAS

Travelers Casualty and Surety Company of America
Hartford Connecticut

Bond # 105789060

KNOW ALL MEN BY THESE PRESENTS, that **R W Lucas Construction, LLC**

(hereinafter called the Principal), as Principal and **TRAVELERS CASUALTY AND SURETY COMPANY OF AMERICA** (hereinafter called the Surety), as Surety, are held and firmly bound unto **Galveston County** (hereinafter called the Obligee), as Obligee, in the amount of **Three Million Four Hundred Seventeen Thousand Six Hundred Sixty Seven and 99/100--- ($3,417,667.99---) Dollars** for the payment where of, the said Principal and Surety bind themselves, and their heirs, administrators, executors, successors and assigns, jointly and severally, firmly by these presents

WHEREAS, the Principal has entered into a certain contract with the Obligee, dated the 21 day of August, 2012, for **Stewart Road Paving and Drainage Improvements from 7 ½ Mile Road to Cove View** which contract is hereby referred to and made a part hereof and to the same extent if copied at length herein

NOW, THEREFORE, THE CONDITION OF THIS OBLIGATION IS SUCH, that if the said Principal shall faithfully perform the work in accordance with the plans, specifications and contract documents, then this obligation shall be void, otherwise to remain in full force and effect

PROVIDED, HOWEVER, that this bond is executed pursuant to Chapter 2253 of the Texas Government Code and all liabilities on this bond shall be determined in accordance with the provisions of said Code to the same extent as if it were copied at length herein

IN WITNESS WHEREOF, the said Principal and Surety have signed and sealed this instrument this 21 day of August, 2012

R W Lucas Construction, LLC, Principal

By Ryan Lucas, President

TRAVELERS CASUALTY AND SURETY COMPANY OF AMERICA
Surety

By Kelly J Brooks
Kelly J Brooks, Attorney-in-Fact

STATUTORY PERFORMANCE BOND PURSUANT TO CHAPTER 2253 OF THE TEXAS GOVERNMENT CODE

WARNING THIS POWER OF ATTORNEY IS INVALID WITHOUT THE RED BORDER

TRAVELERS

POWER OF ATTORNEY

Farmington Casualty Company
Fidelity and Guaranty Insurance Company
Fidelity and Guaranty Insurance Underwriters, Inc
St Paul Fire and Marine Insurance Company
St Paul Guardian Insurance Company
St Paul Mercury Insurance Company
Travelers Casualty and Surety Company
Travelers Casualty and Surety Company of America
United States Fidelity and Guaranty Company

Attorney-In Fact No 215018

Certificate No 004728869

KNOW ALL MEN BY THESE PRESENTS That St Paul Fire and Marine Insurance Company St Paul Guardian Insurance Company and St Paul Mercury Insurance Company are corporations duly organized under the laws of the State of Minnesota that Farmington Casualty Company Travelers Casualty and Surety Company and Travelers Casualty and Surety Company of America are corporations duly organized under the laws of the State of Connecticut that United States Fidelity and Guaranty Company is a corporation duly organized under the laws of the State of Maryland, that Fidelity and Guaranty Insurance Company is a corporation duly organized under the laws of the State of Iowa and that Fidelity and Guaranty Insurance Underwriters, Inc , is a corporation duly organized under the laws of the State of Wisconsin (herein collectively called the "Companies) and that the Companies do hereby make constitute and appoint

C A McClure, Kelly J Brooks, Kenneth L Meyer, and Michelle Ulery

of the City of Houston, State of Texas their true and lawful Attorney(s)-in-Fact each in their separate capacity if more than one is named above to sign execute seal and acknowledge any and all bonds recognizances, conditional undertakings and other writings obligatory in the nature thereof on behalf of the Companies in their business of guaranteeing the fidelity of persons guaranteeing the performance of contracts and executing or guaranteeing bonds and undertakings required or permitted in any actions or proceedings allowed by law

IN WITNESS WHEREOF, the Companies have caused this instrument to be signed and their corporate seals to be hereto affixed this 9th day of February 2012

Farmington Casualty Company
Fidelity and Guaranty Insurance Company
Fidelity and Guaranty Insurance Underwriters, Inc
St Paul Fire and Marine Insurance Company
St Paul Guardian Insurance Company
St Paul Mercury Insurance Company
Travelers Casualty and Surety Company
Travelers Casualty and Surety Company of America
United States Fidelity and Guaranty Company

State of Connecticut
City of Hartford ss

By
George W Thompson, Senior Vice President

On this the 9th day of February 2012, before me personally appeared George W Thompson who acknowledged himself to be the Senior Vice President of Farmington Casualty Company Fidelity and Guaranty Insurance Company Fidelity and Guaranty Insurance Underwriters Inc St Paul Fire and Marine Insurance Company St Paul Guardian Insurance Company St Paul Mercury Insurance Company, Travelers Casualty and Surety Company, Travelers Casualty and Surety Company of America and United States Fidelity and Guaranty Company and that he, as such, being authorized so to do executed the foregoing instrument for the purposes therein contained by signing on behalf of the corporations by himself as a duly authorized officer

In Witness Whereof, I hereunto set my hand and official seal
My Commission expires the 30th day of June 2016

Marie C. Tetreault
Marie C Tetreault, Notary Public

58440-6-11Printed in U S A

WARNING THIS POWER OF ATTORNEY IS INVALID WITHOUT THE RED BORDER

This Power of Attorney is granted under and by the authority of the following resolutions adopted by the Boards of Directors of Farmington Casualty Company Fidelity and Guaranty Insurance Company, Fidelity and Guaranty Insurance Underwriters Inc St Paul Fire and Marine Insurance Company, St Paul Guardian Insurance Company, St Paul Mercury Insurance Company, Travelers Casualty and Surety Company Travelers Casualty and Surety Company of America, and United States Fidelity and Guaranty Company which resolutions are now in full force and effect, reading as follows

RESOLVED, that the Chairman, the President any Vice Chairman any Executive Vice President, any Senior Vice President any Vice President, any Second Vice President the Treasurer any Assistant Treasurer the Corporate Secretary or any Assistant Secretary may appoint Attorneys-in-Fact and Agents to act for and on behalf of the Company and may give such appointee such authority as his or her certificate of authority may prescribe to sign with the Company s name and seal with the Company s seal bonds recognizances contracts of indemnity and other writings obligatory in the nature of a bond recognizance or conditional undertaking, and any of said officers or the Board of Directors at any time may remove any such appointee and revoke the power given him or her and it is

FURTHER RESOLVED that the Chairman the President any Vice Chairman any Executive Vice President any Senior Vice President or any Vice President may delegate all or any part of the foregoing authority to one or more officers or employees of this Company provided that each such delegation is in writing and a copy thereof is filed in the office of the Secretary, and it is

FURTHER RESOLVED, that any bond recognizance contract of indemnity, or writing obligatory in the nature of a bond, recognizance or conditional undertaking shall be valid and binding upon the Company when (a) signed by the President any Vice Chairman any Executive Vice President, any Senior Vice President or any Vice President, any Second Vice President, the Treasurer, any Assistant Treasurer the Corporate Secretary or any Assistant Secretary and duly attested and sealed with the Company s seal by a Secretary or Assistant Secretary, or (b) duly executed (under seal if required) by one or more Attorneys-in-Fact and Agents pursuant to the power prescribed in his or her certificate or their certificates of authority or by one or more Company officers pursuant to a written delegation of authority and it is

FURTHER RESOLVED that the signature of each of the following officers President any Executive Vice President, any Senior Vice President, any Vice President, any Assistant Vice President any Secretary, any Assistant Secretary and the seal of the Company may be affixed by facsimile to any Power of Attorney or to any certificate relating thereto appointing Resident Vice Presidents Resident Assistant Secretaries or Attorneys-in-Fact for purposes only of executing and attesting bonds and undertakings and other writings obligatory in the nature thereof and any such Power of Attorney or certificate bearing such facsimile signature or facsimile seal shall be valid and binding upon the Company and any such power so executed and certified by such facsimile signature and facsimile seal shall be valid and binding on the Company in the future with respect to any bond or understanding to which it is attached

I, Kevin E Hughes the undersigned Assistant Secretary of Farmington Casualty Company, Fidelity and Guaranty Insurance Company Fidelity and Guaranty Insurance Underwriters Inc St Paul Fire and Marine Insurance Company St Paul Guardian Insurance Company, St Paul Mercury Insurance Company Travelers Casualty and Surety Company Travelers Casualty and Surety Company of America, and United States Fidelity and Guaranty Company do hereby certify that the above and foregoing is a true and correct copy of the Power of Attorney executed by said Companies, which is in full force and effect and has not been revoked

IN TESTIMONY WHERFOF I have hereunto set my hand and affixed the seals of said Companies this 21 day of August, 2012

Kevin E Hughes Assistant Secretary

To verify the authenticity of this Power of Attorney, call 1-800-421-3880 or contact us at www travelersbond com Please refer to the Attorney-In-Fact number the above-named individuals and the details of the bond to which the power is attached

Travelers

IMPORTANT NOTICE

TO OBTAIN INFORMATION OR MAKE A COMPLAINT:

You may contact Travelers Casualty & Surety Company of America, Travelers Casualty & Surety Company, Travelers Indemnity Company, Standard Fire Insurance Company and/or Farmington Casualty Company for information or to make a complaint at

Travelers Bond
Attn Claims
1500 Market Street
West Tower, Suite 2900
Philadelphia, PA 19102

(267) 675-3000
(267) 675-3102 Fax

You may contact the Texas Department of Insurance to obtain the information on companies, coverages, rights or complaints at

Texas Department of Insurance
P.O Box 149104
Austin, TX 78714-9104

(800) 252-3439

ATTACH THIS NOTICE TO YOUR BOND This notice is for information only and does not become a part or a condition of the attached document and is given to comply with Section 2253-021, Government Code, and Section 53 202, Property Code, effective September 1, 2001

STATUTORY PAYMENT BOND - TEXAS

Travelers Casualty and Surety Company of America
Hartford Connecticut

Bond #105789060

KNOW ALL MEN BY THESE PRESENTS, that **R W Lucas Construction, LLC**

(hereinafter called the Principal), as Principal and **TRAVELERS CASUALTY AND SURETY COMPANY OF AMERICA** (hereinafter called the Surety), as Surety, are held and firmly bound unto **Galveston County** (hereinafter called the Obligee), as Obligee, in the amount of **Three Million Four Hundred Seventeen Thousand Six Hundred Sixty Seven and 99/100---($3,417,667.99---) Dollars** for the payment where of, the said Principal and Surety bind themselves, and their heirs, administrators, executors, successors and assigns, jointly and severally, firmly by these presents

WHEREAS, the Principal has entered into a certain contract with the Obligee, dated the 21 day of August, 2012, for **Stewart Road Paving and Drainage Improvements from 7 ½ Mile Road to Cove View** which contract is hereby referred to and made a part hereof and to the same extent if copied at length herein

NOW, THEREFORE, THE CONDITION OF THIS OBLIGATION IS SUCH, that if the said Principal shall pay all claimants supplying labor and material to him or a subcontractor in the prosecution of the work provided for in said contract , then, this obligation shall be void, otherwise to remain in full force and effect

PROVIDED, HOWEVER, that this bond is executed pursuant to Chapter 2253 of the Texas Government Code and all liabilities on this bond shall be determined in accordance with the provisions of said Code to the same extent as if it were copied at length herein

IN WITNESS WHEREOF, the said Principal and Surety have signed and sealed this instrument this 21 day of August, 2012

R W Lucas Construction LLC, Principal

By Ryan Lucas, President

TRAVELERS CASUALTY AND SURETY COMPANY OF AMERICA
Surety

By Kelly J Brooks, Attorney-in-Fact

STATUTORY PAYMENT BOND PURSUANT TO CHAPTER 2253 OF THE TEXAS GOVERNMENT CODE

WARNING THIS POWER OF ATTORNEY IS INVALID WITHOUT THE RED BORDER

TRAVELERS

POWER OF ATTORNEY

Farmington Casualty Company
Fidelity and Guaranty Insurance Company
Fidelity and Guaranty Insurance Underwriters, Inc
St Paul Fire and Marine Insurance Company
St Paul Guardian Insurance Company
St Paul Mercury Insurance Company
Travelers Casualty and Surety Company
Travelers Casualty and Surety Company of America
United States Fidelity and Guaranty Company

Attorney-In Fact No 215018 **Certificate No** 004728868

KNOW ALL MEN BY THESE PRESENTS That St Paul Fire and Marine Insurance Company St Paul Guardian Insurance Company and St Paul Mercury Insurance Company are corporations duly organized under the laws of the State of Minnesota that Farmington Casualty Company, Travelers Casualty and Surety Company and Travelers Casualty and Surety Company of America are corporations duly organized under the laws of the State of Connecticut, that United States Fidelity and Guaranty Company is a corporation duly organized under the laws of the State of Maryland, that Fidelity and Guaranty Insurance Company is a corporation duly organized under the laws of the State of Iowa and that Fidelity and Guaranty Insurance Underwriters Inc is a corporation duly organized under the laws of the State of Wisconsin (herein collectively called the Companies) and that the Companies do hereby make, constitute and appoint

C A McClure, Kelly J Brooks, Kenneth L Meyer, and Michelle Ulery

of the City of Houston State of Texas their true and lawful Attorney(s)-in-Fact, each in their separate capacity if more than one is named above to sign execute seal and acknowledge any and all bonds, recognizances conditional undertakings and other writings obligatory in the nature thereof on behalf of the Companies in their business of guaranteeing the fidelity of persons guaranteeing the performance of contracts and executing or guaranteeing bonds and undertakings required or permitted in any actions or proceedings allowed by law

IN WITNESS WHEREOF the Companies have caused this instrument to be signed and their corporate seals to be hereto affixed this 9th day of February 2012

Farmington Casualty Company
Fidelity and Guaranty Insurance Company
Fidelity and Guaranty Insurance Underwriters, Inc
St Paul Fire and Marine Insurance Company
St Paul Guardian Insurance Company
St Paul Mercury Insurance Company
Travelers Casualty and Surety Company
Travelers Casualty and Surety Company of America
United States Fidelity and Guaranty Company

State of Connecticut
City of Hartford ss

By George W Thompson Senior Vice President

On this the 9th day of February 2012 before me personally appeared George W Thompson who acknowledged himself to be the Senior Vice President of Farmington Casualty Company Fidelity and Guaranty Insurance Company Fidelity and Guaranty Insurance Underwriters Inc St Paul Fire and Marine Insurance Company St Paul Guardian Insurance Company St Paul Mercury Insurance Company, Travelers Casualty and Surety Company, Travelers Casualty and Surety Company of America and United States Fidelity and Guaranty Company, and that he as such being authorized so to do executed the foregoing instrument for the purposes therein contained by signing on behalf of the corporations by himself as a duly authorized officer

In Witness Whereof, I hereunto set my hand and official seal
My Commission expires the 30th day of June 2016

Marie C. Tetreault Notary Public

58440-6-11 Printed in U S A

WARNING THIS POWER OF ATTORNEY IS INVALID WITHOUT THE RED BORDER

This Power of Attorney is granted under and by the authority of the following resolutions adopted by the Boards of Directors of Farmington Casualty Company Fidelity and Guaranty Insurance Company, Fidelity and Guaranty Insurance Underwriters, Inc , St Paul Fire and Marine Insurance Company St Paul Guardian Insurance Company St Paul Mercury Insurance Company, Travelers Casualty and Surety Company Travelers Casualty and Surety Company of America and United States Fidelity and Guaranty Company which resolutions are now in full force and effect reading as follows

RESOLVED, that the Chairman the President, any Vice Chairman any Executive Vice President, any Senior Vice President, any Vice President, any Second Vice President the Treasurer any Assistant Treasurer, the Corporate Secretary or any Assistant Secretary may appoint Attorneys-in-Fact and Agents to act for and on behalf of the Company and may give such appointee such authority as his or her certificate of authority may prescribe to sign with the Company s name and seal with the Company s seal bonds, recognizances contracts of indemnity and other writings obligatory in the nature of a bond, recognizance or conditional undertaking and any of said officers or the Board of Directors at any time may remove any such appointee and revoke the power given him or her and it is

FURTHER RESOLVED that the Chairman, the President, any Vice Chairman any Executive Vice President any Senior Vice President or any Vice President may delegate all or any part of the foregoing authority to one or more officers or employees of this Company provided that each such delegation is in writing and a copy thereof is filed in the office of the Secretary and it is

FURTHER RESOLVED, that any bond recognizance, contract of indemnity or writing obligatory in the nature of a bond, recognizance or conditional undertaking shall be valid and binding upon the Company when (a) signed by the President, any Vice Chairman any Executive Vice President any Senior Vice President or any Vice President any Second Vice President, the Treasurer, any Assistant Treasurer the Corporate Secretary or any Assistant Secretary and duly attested and sealed with the Company's seal by a Secretary or Assistant Secretary or (b) duly executed (under seal if required) by one or more Attorneys-in-Fact and Agents pursuant to the power prescribed in his or her certificate or their certificates of authority or by one or more Company officers pursuant to a written delegation of authority, and it is

FURTHER RESOLVED that the signature of each of the following officers President, any Executive Vice President, any Senior Vice President, any Vice President any Assistant Vice President any Secretary any Assistant Secretary, and the seal of the Company may be affixed by facsimile to any Power of Attorney or to any certificate relating thereto appointing Resident Vice Presidents Resident Assistant Secretaries or Attorneys-in-Fact for purposes only of executing and attesting bonds and undertakings and other writings obligatory in the nature thereof, and any such Power of Attorney or certificate bearing such facsimile signature or facsimile seal shall be valid and binding upon the Company and any such power so executed and certified by such facsimile signature and facsimile seal shall be valid and binding on the Company in the future with respect to any bond or understanding to which it is attached

I Kevin E Hughes the undersigned, Assistant Secretary, of Farmington Casualty Company, Fidelity and Guaranty Insurance Company, Fidelity and Guaranty Insurance Underwriters Inc St Paul Fire and Marine Insurance Company St Paul Guardian Insurance Company, St Paul Mercury Insurance Company, Travelers Casualty and Surety Company Travelers Casualty and Surety Company of America, and United States Fidelity and Guaranty Company do hereby certify that the above and foregoing is a true and correct copy of the Power of Attorney executed by said Companies, which is in full force and effect and has not been revoked

IN TESTIMONY WHEREOF I have hereunto set my hand and affixed the seals of said Companies this 21 day of August 2012

Kevin E Hughes Assistant Secretary

To verify the authenticity of this Power of Attorney, call 1-800-421-3880 or contact us at www travelersbond com Please refer to the Attorney-In-Fact number the above-named individuals and the details of the bond to which the power is attached

Travelers

IMPORTANT NOTICE

TO OBTAIN INFORMATION OR MAKE A COMPLAINT:

You may contact Travelers Casualty & Surety Company of America, Travelers Casualty & Surety Company, Travelers Indemnity Company, Standard Fire Insurance Company and/or Farmington Casualty Company for information or to make a complaint at

Travelers Bond
Attn Claims
1500 Market Street
West Tower, Suite 2900
Philadelphia, PA 19102

(267) 675-3000
(267) 675-3102 Fax

You may contact the Texas Department of Insurance to obtain the information on companies, coverages, rights or complaints at

Texas Department of Insurance
P O Box 149104
Austin, TX 78714-9104

(800) 252-3439

ATTACH THIS NOTICE TO YOUR BOND. This notice is for information only and does not become a part or a condition of the attached document and is given to comply with Section 2253-021, Government Code, and Section 53 202, Property Code, effective September 1, 2001

COUNTY OF GALVESTON

SPECIFICATIONS AND CONTRACT DOCUMENTS

STEWART ROAD PAVING AND DRAINAGE IMPROVEMENTS PROJECT FROM 7 ½ MILE ROAD TO COVE VIEW

JUNE 2012

COUNTY OF GALVESTON

SPECIFICATIONS AND CONTRACT DOCUMENTS

STEWART ROAD PAVING AND DRAINAGE IMPROVEMENTS PROJECT FROM 7 ½ MILE ROAD TO COVE VIEW

JUNE 2012

STATE OF TEXAS
TOMMY V. CROMER
97594
LICENSED
PROFESSIONAL ENGINEER

Tommy V. Cromer
6/12/12

Tommy Cromer, P.E.
Binkley & Barfield, Inc.
Texas Registration Number F-257

TABLE OF CONTENTS

SECTION	I	Invitation to Bid General Provisions Vendor Qualification Packet Instructions to Bidders
SECTION	II	Bid Proposal Contract Award
SECTION	III	Special Terms and Conditions Wage Rates & AIA Forms
SECTION	IV	General Terms and Conditions
SECTION	V	Galveston County / TxDOT Specifications Special Provisions City of Galveston Water Line Specifications
SECTION	VI	Plans

SECTION I

Invitation to Bid

General Provisions

Vendor Qualification Packet

Instructions to Bidders

BID #: B121027
OPEN· 06/28/2012
2 30 p.m.

INVITATION TO BID
STEWART ROAD PAVING AND DRAINAGE IMPROVEMENTS PROJECT FROM 7 ½ MILE ROAD TO COVE VIEW GALVESTON COUNTY, TEXAS

BID #B121027

The County of Galveston solicits bids on the following project

Contract to furnish labor, equipment, materials and incidentals as required for
Bid #B121027, Stewart Road Paving and Drainage Improvements Project from 7 ½ Mile Road to Cove View

Sealed bids in **sets of six (6), (one (1) original and five (5) copies)** will be received in the office of the County Purchasing Agent, until **2:30 PM** on **06/28/2012** and opened immediately in that office in the presence of the County Auditor and the Purchasing Agent. **Bidders are specifically advised that any bid delivered after this time will be returned unopened.**

Submitted bids will be publicly opened on **06/28/2012 at 2:30 PM** in the Purchasing Agents office located in the Galveston County Courthouse, 722 Moody Avenue (21st St), Fifth (5th) Floor, Galveston, Texas 77550

All bids must be marked on the outside of the envelope
Bid #B121027, Stewart Road Paving and Drainage Improvements Project from 7 ½ Mile Road to Cove View

Bidder's name and return address should be on the outside of the envelope

Plans and specifications may be obtained from the office of Binkley & Barfield, 1710 Seamist Drive, Houston, Texas 77008, (713) 869-3433

A $100 00 non refundable deposit shall be required for each set of plans and specifications

Proposals will be either lump sum or unit prices as shown on the proposal sheet, if applicable The net price will be delivered to Galveston County, including all freight or shipping charges The County is tax exempt and no taxes should be included in your proposal

Bids will be completed on the forms and proposal sheets provided

Each bid must be accompanied by a Certified or Cashier's Check or acceptable Bidder's Bond in the amount of 5% of bid as a guarantee that, if awarded the contract, within sixty (60) days from the date of bid opening, the bidder will enter into a contract and execute any required Performance and Payment Bonds.

Commissioners' Court reserves the right to waive any informality and to reject any and all bids, and to accept bid or bids which, in its opinion, is most advantageous to the County

Rufus G Crowder, CPPB
Purchasing Agent
Galveston County

GENERAL PROVISIONS
STEWART ROAD PAVING AND DRAINAGE IMPROVEMENTS PROJECT
FROM 7 1/2 MILE ROAD TO COVE VIEW
GALVESTON COUNTY, TEXAS

1. BID PACKAGE

The invitation to bid, general and special provisions, drawings, specifications/line item details, contract documents and the bid sheet are all considered part of this bid package Bids must be submitted in ***sets of six (6), one (1) original and five (5) copies****, on the forms provided by the County, including the bid sheet completed in its entirety and signed by an authorized representative by original signature Failure to complete and sign the bid sheet/contract page(s) may disqualify the bid from being considered by Commissioners' Court Any individual signing on behalf of the bidder expressly affirms that he or she is duly authorized to tender this bid and to sign the bid sheet/contract under the terms and conditions in this bid Bidder further understands that the signing of the contract shall be of no effect unless subsequently awarded and the contract properly executed by Commissioners' Court All figures must be written in ink or typed Figures written in pencil or with erasures are not acceptable However, mistakes may be crossed out, corrections inserted, and initialed in ink by the individual signing the bid If there are discrepancies between unit prices quoted and extensions, the unit price will prevail Each bidder is required to thoroughly review this entire bid packet to familiarize themselves with the bid procedures, the plans and specifications for the requested work as well as the terms, and conditions of the contract the successful bidder will execute with the County*

2. COMPETITIVENESS AND INTEGRITY

To prevent biased evaluations and to preserve the competitiveness and integrity of such acquisition efforts, bidders are to direct all communications regarding this bid to the Galveston County Purchasing Agent, unless otherwise specifically noted

Do not contact the requesting department Attempts by offering firms to circumvent this requirement will be viewed negatively and may result in rejection of the offer of the firm found to be in non-compliance

All questions regarding this Request for Bid must be submitted in writing to

Rufus G. Crowder, CPPB
Galveston County Purchasing Agent
722 Moody, Fifth (5th) Floor
Galveston, Texas 77550
Fax: (409) 621-7987
E-mail: rufus.crowder@co.galveston.tx.us

An authorized person from the submitting firm must sign all bids This signature acknowledges that the bidder has read the bid documents thoroughly before submitting a bid and will fulfill the obligations in accordance to the terms, conditions, and specifications

Please carefully review this Invitation to Bid It provides specific information necessary to aid participating firms in formulating a thorough response

3. TIME FOR RECEIVING BIDS

Bids received prior to the submission deadline will be maintained unopened until the specified time for opening If the bidder fails to identify the Bid Number on the outside of the envelope as required, the Purchasing Agent will open the envelope for the sole purpose of identifying the bid number for which the submission was made The envelope will then be resealed No liability will attach to a County office or employee for the premature opening of a bid If you do not submit a bid, return this Invitation to Bid and state reason, otherwise your name may be removed from our mailing list

GENERAL PROVISIONS
STEWART ROAD PAVING AND DRAINAGE IMPROVEMENTS PROJECT
FROM 7 1/2 MILE ROAD TO COVE VIEW
GALVESTON COUNTY, TEXAS

4. BID OPENING

The names of the bidders and the pricing will be read aloud at the bid opening Sealed bids will be received in the office of the County Purchasing Agent and opened immediately in that office in the presence of the County Auditor and the Purchasing Agent No bid may be withdrawn for a period of sixty (60) calendar days of the bid opening date

5. REJECTION OF BIDS

The County, acting through its Commissioners' Court reserves the right to (1) reject any and all bids and waive any informality in the bids received, (2) disregard the bid of any bidder determined to be non responsive to the provisions contained herein

6. RESTRICTIVE OR AMBIGUOUS SPECIFICATIONS

It is the responsibility of the prospective bidder to review the entire invitation to bid packet and to notify the Purchasing Department if the specifications are formulated in a manner that would restrict competition or appear ambiguous Any such protest or question(s) regarding the specifications or bid procedures must be received in the Purchasing Department not less than seventy-two (72) hours prior to the time set for bid opening Vendors are to bid as specified herein or bid an approved equal The mention of any brand name in the specifications is not intended to be restrictive, but is intended to describe the general features and requirements (or equivalent) that Galveston County is seeking

7. SUBSTITUTES

It is not the County's intent to discriminate against any materials of equal merit to those specified, however, no substitutions are allowed for this bid unless specific instructions are included in the Special Provision section that allow alternate substitutions Should the bidder desire to use any substitutions, prior written approval shall be obtained from the County Purchasing Agent sufficiently in advance in order that an addendum might be issued

8. EXCEPTIONS TO BID

No exceptions to this bid are allowed unless specific instructions are included in the Special Provision section that allow exceptions to the bid conditions Otherwise, Bidders must adhere to the specifications when completing their submittals

9 PRICING

Bids will be either lump sum or unit prices as shown on the bid sheet The net price will be delivered to Galveston County, including all freight or shipping charges The County is tax exempt and no taxes should be included in your bid

Cash discount must be shown on bid, otherwise prices will be considered net Unless prices and all information requested are complete, bid may be disregarded and given no consideration

In case of default by the contractor, the County of Galveston may procure the articles or services from other sources and may deduct from any monies due, or that may thereafter become due to the contractor, the difference between the price named in the contract of purchase order and the actual cost thereof to the County of Galveston Prices paid by the County of Galveston shall be considered the prevailing market price at the time such purchase is made Periods or performance may be extended if the facts as to the cause of delay justify such extension in the opinion of the Purchasing Agent and the Commissioners' Court

10. PROCUREMENT CARD PROGRAM

The County of Galveston participates in a Procurement Card (P-Card) program that allows payments made to the vendor by credit card This method normally results in substantially faster bill payments sometimes within three (3) to five (5) days of the actual transaction date If your company will accept payment via credit card (Visa, MasterCard), please notate this in you bid submittal

GENERAL PROVISIONS
STEWART ROAD PAVING AND DRAINAGE IMPROVEMENTS PROJECT
FROM 7 1/2 MILE ROAD TO COVE VIEW
GALVESTON COUNTY, TEXAS

11. TAX EXEMPTION

Pursuant to Section 151 309 of the Texas Tax Code, Galveston County qualifies for exemption from sales, excise and use taxes imposed under the Limited Sales, Excise, and Use Tax Act, which is codified at Chapter 151 of the Texas Tax Code In accordance with Section 151 309, a taxable item sold, leased, or rented to, or stored, used, or consumed by the County is exempt from the taxes imposed under Chapter 151 Section 151 311 of the Texas Tax Code lists its requirements for tax exemptions on taxable items incorporated into or used for the improvement of realty of an exempt entity Section 151 3111 lists its requirements for tax exemptions on certain services Contractor is cautioned that this RFP provision simply highlights some statutory qualifying exemptions from the sale and use taxes imposed under Chapter 151 If Contractor believes all or a portion of its costs are exempt from taxes imposed under Chapter 151 of the Texas Tax Code, it may request a certificate of tax exemption by submitting a written request for such to the County Purchasing Agent Additionally, information regarding eligibility for exemption from taxes imposed under Chapter 151 may be obtained through the Office of the State of Texas Comptroller of Public Accounts, whose website is http //www window state tx us/

12 PASS THROUGH COST ADJUSTMENTS

Except in instances of extreme extenuating circumstances Vendor prices shall remain firm throughout the Contract period and any renewals Examples of extreme extenuating circumstances include such situations as a nation wide rail strike, oil shortage, or oil embargos

In extreme extenuating circumstances Vendors may be allowed to temporarily "pass through" additional costs they are forced to incur through no fault of their own A request for a pass through cost increase will not be considered unless a Vendor's cost for his product exceeds 10% over the original cost for the product Also, the increase in cost must be nationwide and consistent for a minimum period of sixty (60) days If a Vendor thinks he will be asking for a pass through cost adjustment during the term of his contract the original cost of his product to him must be stated in Vendor's original bid

A request for a pass through cost does not guarantee that one will be granted Vendors must submit such information on each request as is required by the County Purchasing Agent The County Purchasing Agent will review each request on a case by case basis and determine the appropriateness of each request as well as amount and duration of increase Vendors will not be permitted any additional compensation for mark-ups or profits based on the increase in price Rather, such additional compensation will be limited to the actual increase in original cost to the Vendor as such increase is reflected by the original cost stated in the bid But in no event will the amount of additional compensation exceed 25% increase in

Vendor's original cost for his product as such cost is reflected in Vendor's original bid or the duration exceed a period of sixty (60) days In addition, should, during the period of the pass through, cost return to normal or decrease to below pre pass through prices, appropriate downward adjustments will be made No more than one pass through adjustment will be permitted per year

13. MODIFICATION OF BIDS

A bidder may modify a bid by letter at any time prior to the submission deadline for receipt of bids Modification requests must be received prior to the submission deadline Modifications made before opening time must be initialed by bidder guaranteeing authenticity Bids may not be amended or altered after the official opening with the single exception that any product literature and/or supporting data required by the actual specifications, if any, will be accepted at any time prior to the Commissioners' Court consideration of same

14. AWARD OF BIDS

The award will be made to the bidder who is determined to be the lowest bidder demonstrating the best value and ability to fulfill the requirements of the bid The prices proposed will be considered firm and cannot be altered after the submission deadline

BID#· B121027
OPEN: 06/28/2012
TIME: 2:30 PM

GENERAL PROVISIONS
STEWART ROAD PAVING AND DRAINAGE IMPROVEMENTS PROJECT
FROM 7 1/2 MILE ROAD TO COVE VIEW
GALVESTON COUNTY, TEXAS

The criteria utilized for determining responsibility of bidder(s) includes, but is not limited to, the bidder's experience, skill, ability, business judgment, financial capacity, integrity, honesty, possession of the necessary facilities or equipment, previous performance, reputation, promptness, and any other factor deemed relevant by the County The bidder shall furnish any information requested by the County in order for the County to determine whether a bidder is responsible

In determining and evaluating the best bid, the pricing may not necessarily be controlling, but quality, equality, efficiency, utility, general terms, delivery, suitability of the service offered, and the reputation of the service in general use will also be considered with any other relevant items The Commissioners' Court shall be the sole judge in the determination of these matters

Each bidder, by submitting a bid, agrees that if their bid is accepted by the Commissioners' Court, such bidder will furnish all items and services upon which prices have been tendered and upon the terms and conditions in this bid and contract

The contractor shall commence work only after the transmittal of a fully executed purchase order, or contract, and after receiving written notification to proceed from Galveston County The contractor will perform all services indicated in the bid in compliance with this contract

Neither department heads nor elected officials are authorized to sign any binding contracts or agreements prior to being properly placed on the Commissioners' Court agenda and approved in open court Department heads and other elected officials are not authorized to enter into any type of agreement or contract on behalf of Galveston County Only the Commissioners' Court, acting as a body, may enter into a contract on behalf of Galveston County Additionally, department heads and other elected officials are not authorized to agree to any type of supplemental agreements or contracts for goods or services Supplemental agreements are subject to review by the Galveston County Legal Department prior to being signed by the County's authorized representative

The County of Galveston reserves the right to accept bids on individual items listed, or group items, or on the bid as a whole, to reject any and all bids, to waive any informality in the bids, and to accept the bid that appears to be in the best interest of the County

Notice of contract award will be made within ninety (90) days of opening of bids to the lowest responsive and responsible contractor, whose bid complies with all the requirements in this Invitation to Bid unless special consideration is granted by the Commissioners' Court

Contractor shall submit to the County, for approval, within ten (10) days from notice of contract award, all Certificates of Insurance evidencing the required coverage as described under insurance in the schedule of the Invitation to Bid, item 29, page 7, Proof of Insurance

The contractor shall not commence work under these terms and conditions of the contract until all applicable Certificates of Insurance, Performance and Payment Bonds, and Irrevocable Letter of Credit (if required) have been approved by the County of Galveston and he/she has received notice to proceed in writing and an executed copy of the contract from the County of Galveston Purchasing Agent

15. RESULTANT CONTRACT

The resultant contract if applicable, shall become effective upon the Commissioners' Court execution of the same The contract documents shall consist of the contract, the general and special provisions, the drawings, bid package, any addenda issued and any change orders issued during the work If applicable to the attached bid, bidder must sign three (3) original contracts and return with their bid submittal

GENERAL PROVISIONS
STEWART ROAD PAVING AND DRAINAGE IMPROVEMENTS PROJECT
FROM 7 1/2 MILE ROAD TO COVE VIEW
GALVESTON COUNTY, TEXAS

16. CONTRACT TERM

The term of the resultant contract will begin on the date of execution by the Commissioners' Court and will terminate on the date specified in the resultant contract unless terminated earlier as herein set forth

17. TERMINATION FOR DEFAULT

Failure of either party in the performance of any of the provisions of this contract shall constitute a breach of contract, in which case, either party may require corrective action within ten (10) days from date of receipt of written notice citing the exact nature of such breach Failure of the party being notified to take corrective action within the prescribed ten (10) days, or failure to provide written reply of why no breach has occurred, shall constitute a Default of Contract All notices relating to default by Bidder of the provisions of the contract shall be issued by County by its Legal Department, and all replies shall be made in writing to the Galveston County Legal Department Notices issued by or issued to anyone other than the Galveston County Legal Department shall be null and void and shall be considered as not having been issued or received

Galveston County reserves the right to enforce the performance of this contract in any manner prescribed by law in the event of breach or default of this contract, and may contract with another party, with or without solicitation of bids or bids or further negotiations At a minimum, bidder shall be required to pay any difference in service or materials, should it become necessary to contract with another source, plus reasonable administrative costs and attorney fees

In the event of Termination for Default, Galveston County, its agents or representatives shall not be liable for loss of any profits anticipated to be made by bidder

No waiver by either party of any event of default under this agreement shall operate as a waiver of any subsequent default under the terms of this agreement

County reserves the right to terminate this contract immediately in the event bidder

- Fails to meet delivery or completion schedules,
- Fails to otherwise perform in accordance with the accepted bid and the contract

18. TERMINATION FOR CONVENIENCE

County may terminate this contract upon at least thirty (30) days prior written notice for its' convenience or for any reason deemed by the County to serve the public interest County may terminate this contract upon thirty (30) days prior written notice for any reason resulting from any governmental law, order, ordinance, regulations, or court order In no event shall County be liable for loss of any profits anticipated to be made hereunder by bidder should this contract be terminated early

19. FORCE MAJEURE

If by reason of Force Majeure either Party shall be rendered unable, wholly or in part, to carry out its responsibilities under this contract by any occurrence by reason of Force Majeure, then the Party unable to carry out its responsibility shall give the other Party notice and full particulars of such Force Majeure in writing within a reasonable time after the occurrence of the event, and such notice shall suspend the Party's responsibility for the continuance of the Forced Majeure claimed, but for no longer period

Force Majeure means acts of God, floods, hurricanes, tropical storms, tornadoes, earthquakes, or other natural disasters, acts of a public enemy, acts of terrorism, sovereign conduct, riots, civil commotion, strikes or lockouts, and other causes that are not occasioned by either Party's conduct which by the exercise of due diligence the Party is unable to overcome and which substantially interferes with operations

GENERAL PROVISIONS
STEWART ROAD PAVING AND DRAINAGE IMPROVEMENTS PROJECT
FROM 7 1/2 MILE ROAD TO COVE VIEW
GALVESTON COUNTY, TEXAS

20. ESTIMATED QUANTITIES

Any reference to quantities shown in the Invitation to Bid are an estimate only Since the exact quantities cannot be predetermined, the County reserves the right to adjust quantities as deemed necessary to meet its' requirements

21 CONTRACTOR INVESTIGATION

Before submitting a bid, each contractor shall make all investigations and examinations necessary to ascertain all site conditions and requirements affecting the full performance of the contract and to verify any representations made by the County upon which the contractor will rely If the contractor receives an award as a result of its bid submission, failure to have made such investigations and examinations will in no way relieve the contractor from its obligation to comply in every detail with all provisions and requirements of the contract, nor will a plea of ignorance of such conditions and requirements be accepted as a basis for any claim whatsoever by the contractor for additional compensation

22. NO COMMITMENT BY COUNTY OF GALVESTON

This Invitation to Bid does not commit the County of Galveston to award any costs or pay any costs, or to award any contract, or to pay any costs associated with or incurred in the preparation of a bid to this request, or to procure or contract for services or supplies

23. SINGLE BID RESPONSE

If only one bid is received in response to the Invitation to Bid, a detailed cost bid may be requested of the single contractor A cost/price analysis and evaluation and/or audit may be performed of the cost bid in order to determine if the price is fair and reasonable

24 REJECTION/DISQUALIFICATION OF BIDS

Galveston County reserves the right to reject any or all bids in whole or in part received by reason of this bid package and may discontinue its efforts for any reason under this bid package at any time prior to actual execution of the contract by the County Bidders may be disqualified and rejection of bids may be recommended to the Commissioners' Court for any of (but not limited to) the following causes

A Failure to use the bid form(s) furnished by the County, if applicable
B Lack of signature by an authorized representative that can legally bind the company on the bid form
C Failure to properly complete the bid
D Bids that do not meet the mandatory requirements
E Evidence of collusion among bidders

25. CHANGES IN SPECIFICATIONS

If it becomes necessary to revise any part of this bid, a written notice of such revision will be provided to all bidders in the form of addenda The County is not bound by any oral representations, clarifications, or changes made in the written specifications by the County's employees, unless such clarification or change is provided to bidders in a written addendum from the Purchasing Agent

The County of Galveston reserves the right to revise or amend the specifications up to the time set for opening of bids Such revisions and amendments, if any, shall be announced by amendments to the solicitation Copies of such amendments shall be furnished to all prospective contractors Prospective contractors are defined as those contractors listed on the County's Invitation to Bid list for this material/service or who have obtained his documents subsequent to the advertisement If revisions and amendments require changes in quantities or prices proposed, or both, the date set for opening of bids may be postponed by such number of days as in the opinion of the County shall enable contractors to revise their bids In any case, the bid opening shall be at least five working days after the last amendment, and the amendment shall include an announcement of the new date if applicable, for the opening of bids

GENERAL PROVISIONS
STEWART ROAD PAVING AND DRAINAGE IMPROVEMENTS PROJECT
FROM 7 1/2 MILE ROAD TO COVE VIEW
GALVESTON COUNTY, TEXAS

26. BID DISCLOSURES

The names of those who submitted bids will not be made public information until after an award is made by Commissioners' Court No price or staffing information will be released Bidders are requested to withhold all inquiries regarding their bid or other submissions until after an award is made No communication is to be had with any County employee, other than the Purchasing Agent, regarding whether a bid was received Violations of this provision may result in the rejection of a bid

27. PROTEST

Any actual or prospective bidder who is allegedly aggrieved in connection with the solicitation or award of bid may protest The protest will be submitted in writing to the Purchasing Agent within seven (7) days after such aggrieved person knows of, or should have known of the facts giving rise thereto If the protest is not resolved by mutual agreement, the Purchasing Agent will promptly issue a decision in writing to the protestant If the protestant wishes to appeal the decision rendered by the Purchasing Agent, such appeal must be made to the Commissioners' Court through the Purchasing Agent The decision of the Court will be final The Court need not consider protests unless this procedure is followed

28. WITHDRAWAL OF BID

Bidders may request withdrawal of a sealed bid prior to the scheduled bid opening time provided the request for withdrawal is submitted to the Purchasing Agent in writing No bids may be withdrawn for a period of sixty (60) calendar days after opening of the bids

29. INDEMNIFICATION

The contractor shall agree to assume all risks and responsibility for, and agrees to indemnify, defend, and save harmless, the County of Galveston, its elected and appointed officials and department heads, and its agents and employees from and against all claims, demands, suits, actions, recoveries, judgments, and costs and expenses including reasonable attorney's fees for the defense thereof in connection therewith on account of the loss of life, property or injury or damage to the person which shall arise from contractor's operations under this contract, its use of County facilities and/or equipment or from any other breach on the part of the contractor, its employees, agents or any person(s) in or about the County's facilities with the expressed or implied consent of the County Contractor shall pay any judgment with cost which may be obtained against Galveston County resulting from contractor's operations under this contract.

Contractor agrees to indemnify and hold the County harmless from all claims of subcontractors, laborers incurred in the performance of this contract Contractor shall furnish satisfactory evidence that all obligations of this nature herein above designated have been paid, discharged or waived. If Contractor fails to do so, then the County reserves the right to pay unpaid bills of which County has written notice direct and withhold from Contractor's unpaid compensation a sum of money reasonably sufficient to liquidate any and all such lawful claims.

30 PROOF OF INSURANCE

Successful bidder agrees to keep in full force and effect, a policy of public liability and property damage insurance issued by a casualty company authorized to do business in the State of Texas, and in standard form approved by the Board of Insurance Commissioners' of the State of Texas, with coverage provision insuring the public from any loss or damage that may arise to any person or property by reason of services rendered by successful bidder and providing that the amount by reason of services limits of not less than the following sums

A For damages arising out of bodily injury to or death of one person in any one accident
ONE HUNDRED THOUSAND AND NO/100 ($100,000 00) DOLLARS

B For damages arising out of bodily injury to or death of two or more persons in any one accident –
THREE HUNDRED THOUSAND AND NO/100 ($300,000 00) DOLLARS

C For any injury to or destruction of property in any one accident -
ONE HUNDRED THOUSAND AND NO/100 ($100,000 00) DOLLARS

GENERAL PROVISIONS
STEWART ROAD PAVING AND DRAINAGE IMPROVEMENTS PROJECT
FROM 7 1/2 MILE ROAD TO COVE VIEW
GALVESTON COUNTY, TEXAS

Successful bidder shall carry in full force Workers' Compensation Insurance Policy(ies), if there is more than one employee, for all employees, including but not limited to full time, part time, and emergency employees employed by the successful bidder Current insurance Certificates certifying that such policies as specified above are in full force and effect shall be furnished by successful bidder to the County

Galveston County shall be listed as the additional insured on policy certificates and shall be notified of any changes to the policy during the contractual period.

31. BID BOND

Each bidder will be required to furnish with their bid a Cashier's or Certified Check from any bank with in the State of Texas or an acceptable Bidder's Bond for the sum of 5% of the total highest bid payable to the County of Galveston The certified check or bid bond will be returned to the unsuccessful bidder(s) and to the successful bidder on the completion of all contract documents and the furnishing of any necessary payment bonds and insurance certificates

The bid bond or check will be forfeited to the County as liquidated damages should the successful bidder fail to give the required payment and performance bonds and insurance certificates and execute the contract with the said County within thirty (30) days after receiving notice of acceptance of its bid

32 PERFORMANCE AND PAYMENT BOND(S)

V T C A , Government Code Chapter 2253, requires a Performance Bond (for contracts in the excess of $100,000) and a Payment Bond (for contracts in excess of $25,000), to be provided by the Contractor Each bond required shall be equal to the total contract price and shall be issued by a satisfactory surety company The bond(s) will remain in full force and effect until final completion and acceptance of the work

The bond(s) are to be made payable to the County of Galveston They shall be written on forms provided by the surety for public works projects in Texas A surety licensed to do business in the state of Texas must execute the bond

Bidders should familiarize themselves with the entire provisions of V T C A , Chapter 2253 and the penalties provided for its violation before submitting their bid

33. CONFLICT OF INTEREST DISCLOSURE REPORTING

Proposer may be required under Chapter 176 of the Texas Local Government Code to complete and file a conflict of interest questionnaire (CIQ Form) If so, the completed CIQ Form must be filed with the County Clerk of Galveston County, Texas

If Proposer has an employment or other business relationship with an officer of Galveston County or with a family member of an officer of Galveston County that results in the officer or family member of the officer receiving taxable income that exceeds $2,500 00 during the preceding 12-month period, then Proposer **MUST** complete a CIQ Form and file the original of the CIQ Form with the County Clerk of Galveston County

If Proposer has given an officer of Galveston County or a family member of an officer of Galveston County one or more gifts with an aggregate value of more than $250 00 during the preceding 12-months, then Proposer **MUST** complete a CIQ Form and file the original of the CIQ Form with the County Clerk of Galveston County

GENERAL PROVISIONS
STEWART ROAD PAVING AND DRAINAGE IMPROVEMENTS PROJECT
FROM 7 1/2 MILE ROAD TO COVE VIEW
GALVESTON COUNTY, TEXAS

The Galveston County Clerk has offices at the following locations

Galveston County Clerk
Galveston County Justice Center, Suite 2001
600 59th Street
Galveston, Texas 77551

Galveston County Clerk
North County Annex, 1st Floor
174 Calder Road
League City, Texas 77573

Again, if Proposer is required to file a CIQ Form, the original completed form is filed with the Galveston County Clerk **(not the Purchasing Agent)**

For Proposer's convenience, a blank CIQ Form is enclosed with this proposal Blank CIQ Forms may also be obtained by visiting the Galveston County Clerk's website and/or the Purchasing Agent's website – both of these web sites are linked to the Galveston County homepage, at http //www co galveston tx us

As well, blank CIQ Forms may be obtained by visiting the Texas Ethics Commission website, specifically at http //www ethics state tx us/whatsnew/conflict_forms htm

Chapter 176 specifies deadlines for the filing of CIQ Forms (both initial filings and updated filings)

It is Proposer's sole responsibility to file a true and complete CIQ Form with the Galveston County Clerk if Proposer is required to file by the requirements of Chapter 176 Proposer is advised that it is an offense to fail to comply with the disclosure reporting requirements dictated under Chapter 176 of the Texas Local Government Code

If you have questions about compliance with Chapter 176, please consult your own legal counsel Compliance is the individual responsibility of each person, business, and agent who is subject to Chapter 176 of the Texas Local Government Code

34. ENTIRETY OF AGREEMENT AND MODIFICATION

This contract contains the entire agreement between the parties Any prior agreement, promise, negotiation or representation not expressly set forth in this contract has no force or effect Any subsequent modification to this contract must be in writing, signed by both parties

An official representative, employee, or agent of the County does not have the authority to modify or amend this contract except pursuant to specific authority to do so granted by the Galveston County Commissioners' Court

35. NON-COLLUSIONAFFIDAVIT

The contractor declares, by signing and submitting a bid, that the bid is not made in the interest of or on behalf of, any undisclosed person, partnership, company, association, organization, or corporation, that the bid is genuine and not collusive or sham, that the contractor has not directly or indirectly induced or solicited another contractor to put in a false or sham bid, and has not directly or indirectly colluded, conspired, connived, or agreed with any contractor or anyone else to put in a sham bid, of that anyone shall refrain from bidding, that the contractor has not in any manner, directly or indirectly, sought by agreement, communications, or conference with anyone to fix the bid price of the contractor of any other bidder, or to fix any overhead, profit or cost element of the bid price, or of that of any other contractor or to secure any advantage against the public body awarding the contact of anyone interested in the proposed contract, that all statements contained in the bid are true, and further, that the contractor has not, directly or

GENERAL PROVISIONS
STEWART ROAD PAVING AND DRAINAGE IMPROVEMENTS PROJECT FROM 7 1/2 MILE ROAD TO COVE VIEW GALVESTON COUNTY, TEXAS

indirectly, submitted his or her bid price or any breakdown thereof, or the contents thereof, or divulged information or data relative thereto, or paid, and will not pay, any fee to any cooperation, partnership, company association, organization, bid depository, or to any member or agent thereof to effectuate a collusive or sham bid

No negotiations, decisions, or actions shall be initiated by any company as a result of any result of any verbal discussion with any County employee prior to the opening of responses to this Invitation to Bid

No officer or employee of the County of Galveston, and no other public or elected official, or employee, who may exercise any function or responsibilities in the review or approval of this undertaking shall have any personal or financial interest, direct or indirect, in any contract or negotiation process thereof The above compliance request will be part of all County of Galveston contracts for this service

36. PROCUREMENT ETHICS

Galveston County is committed to the highest ethical standards Therefore, it is a serious breach of the public trust to subvert the public purchasing process by directing purchases to certain favored vendors, or to tamper with the competitive bidding process, whether it's done for kickbacks, friendship or any other reason Since misuse of the purchasing power of a local government carries criminal penalties, and many such misuses are from a lack of clear guidelines about what constitutes an abuse of office, the Code of Ethics outlined below must be strictly followed

Galveston County also requires ethical conduct from those who do business with the county

CODE OF ETHICS – Statement of Purchasing Policy

Public employment is a public trust It is the policy of Galveston County to promote and balance the objective of protecting the County's integrity and the objective of facilitating the recruitment and retention of personnel needed by Galveston County Such policy is implemented by prescribing essential standards of ethical conduct without creating unnecessary obstacles to entering public office

Public employees must discharge their duties impartially so as to assure fair competitive access to governmental procurement by responsible contractors Moreover, they should conduct themselves in such a manner as to foster public confidence in the integrity of the Galveston County procurement organization

To achieve this purpose, it is essential that those doing business with Galveston County also observe the ethical standards prescribed herein

General Ethical Standards

It shall be a breach of ethics to attempt to realize personal gain through public employment with Galveston County by any conduct inconsistent with the proper discharge of the employee's duties

It shall be a breach of ethics to attempt to influence any public employee of Galveston County to breach the standards of ethical conduct set forth in this code

It shall be a breach of ethics for any employee of Galveston County to participate directly or indirectly in a procurement when the employee knows that

- The employee or any member of the employee's immediate family, has a financial interest pertaining to the procurement
- A business or organization in which the employee, or any member of the employee's immediate family, has a financial interest pertaining to the procurement

GENERAL PROVISIONS
STEWART ROAD PAVING AND DRAINAGE IMPROVEMENTS PROJECT FROM 7 1/2 MILE ROAD TO COVE VIEW GALVESTON COUNTY, TEXAS

- Any other person, business or organization with which the employee or any member of the employee's immediate family is negotiating or has an arrangement concerning prospective employment is involved in the procurement

Gratuities
It shall be a breach of ethics to offer, give or agree to give any employee of Galveston County, or for any employee or former employee of Galveston County to solicit, demand, accept or agree to accept from another person, a gratuity or an offer of employment in connection with any decision, approval, disapproval, recommendation, preparation of any part of a program requirement or purchase request, influencing the content of any specification or procurement standard, rendering of advice, investigation, auditing, or in any other advisory capacity in any program requirement or a contract or subcontract, or to any solicitation or bid therefore pending before this government

Kickbacks
It shall be a breach of ethics for any payment, gratuity or offer of employment to be made by or on behalf of a subcontractor under a contract to the prime contractor or higher tier subcontractor for any contract for Galveston County, or any person associated therewith, as an inducement for the award of a subcontract or order

Contract Clause
The prohibition against gratuities and kickbacks prescribed above shall be conspicuously set forth in every contract and solicitation by Galveston County

Confidential Information
It shall be a breach of ethics for any employee or former employee of Galveston County to knowingly use confidential information for actual or anticipated personal gain, or for the actual or anticipated gain of any person

37. OPEN RECORDS
Galveston County is required to adhere to the provisions of the Texas Public Information Act All information, documentation and other material submitted by vendor in response to any solicitations or under any resulting contract thereof may be subject to public disclosure under the Texas Public Information Act (TX Gov't Code, Chapter 552) Vendors are hereby notified that Galveston County strictly adheres to this statute and the interpretations thereof rendered by the Courts and/or Texas Attorney General's office Vendor shall be deemed to have knowledge of this law and how to protect their interests under it Exceptions to disclosure of information as provided by this statute are intended to protect legitimate interests of the County or vendor, and are not intended to serve as a means to withhold or delay disclosure of information not covered by these exceptions

If vendor considers any submitted information to be proprietary in nature, protected by trade secrets, or otherwise confidential, said material should be clearly marked and conspicuously notated as such. Failure to do so shall not place any burden on the County of Galveston for the release of any material not abiding by this provision.

38 EMPLOYMENT VERIFICATION
The Immigration Reform and Control Act (IRCA) of 1986 prohibit contractors from knowingly hiring illegal workers Accordingly, Contractors and Subcontractors must collect information regarding an employee's identity and employment eligibility and document that information on Form I-9 In addition, Contractors and Subcontractors will be required to utilize E-Verify to verify that the information their employees provided was valid or that the documents presented were genuine Contractors and Subcontractors shall also be required to keep a record on each employee showing compliance with this requirement The records shall be open at all reasonable hours to inspection by the Galveston County Wage Compliance Officer Each violation of this requirement shall result in the Contractor and/ or Subcontractor paying the County the amount of $60 00 for each employee employed for each calendar day or part of the day that the Contractor or Subcontractor failed to comply with the requirements of this general condition

GENERAL PROVISIONS
STEWART ROAD PAVING AND DRAINAGE IMPROVEMENTS PROJECT
FROM 7 1/2 MILE ROAD TO COVE VIEW
GALVESTON COUNTY, TEXAS

39. NOTICE

Any notice required or permitted between the parties under this contract must be in writing and shall be delivered in person or mailed, certified mail, return receipt requested, or may be transmitted by fax as follows

To the County at

Hon Mark A Henry, County Judge
722 Moody
Second (2nd) Floor
Galveston, Texas 77550
Fax (409) 765-2653

And to

Rufus G Crowder, CPPB
Purchasing Agent
722 Moody, Fifth (5th) Floor
Galveston, Texas 77550
Fax (409) 621-7987

Harvey Bazaman
Director of County Legal
722 Moody, Fifth (5th) Floor
Galveston, Texas 77550
Fax (409) 770-5560

The remainder of this page intentionally left blank

County of Galveston
Purchasing Department
Vendor Qualification Packet

(rev 1 2, March 29, 2010)

All interested parties seeking consideration for qualified vendor status with the County of Galveston **should complete and return only the following attached forms to:**

Galveston County Purchasing Department
722 Moody Avenue, (21st Street), 5th Floor
Galveston, Texas 77550
(409) 770-5371 ***office***
(409) 621-7987 ***fax***

Form PEID: Person /Entity Information Data

Form W-9: Request for Taxpayer Identification Number and Certification
(please note that the included form may not be the latest revised form issued by the Internal Revenue Service Please check the IRS website at http //www irs gov/pub/irs-pdf/fw9.pdf for the latest revision of this form)

Form CIQ. Conflict of Interest Questionnaire
(please note that the included form may not be the latest revised form issued by the State of Texas Ethics Commission Please check the Texas Ethics Commission website at for the latest revision of this form Please note that Galveston County Purchasing Agent is not responsible for the filing of this form with the Galveston County Clerk per instructions of the State of Texas Ethics Commission)

Certificate(s) of Insurance: **If the person or entity seeking qualified vendor status with the County will be performing work at or on any County owned facility and/or property, Certificate(s) of Insurance are required to be submitted prior to performing any work.**

Insurance requirements are as follows

Public Liability and Property Damage Insurance:

Successful vendor agrees to keep in full force and effect, a policy of public liability and property damage insurance issued by a casualty company authorized to do business in the State of Texas, and in standard form approved by the Board of Insurance Commissioners of the State of Texas, with coverage provisions insuring the public from any loss or damage that may arise to any person or property by reason of services rendered by vendor Vendor shall at its own expense be required to carry the following minimum insurance coverages

- For damages arising out of bodily injury to or death of one person in any one occurrence – one hundred thousand and no/100 dollars ($100,000 00),
- For damages arising out of bodily injury to or death of two or more persons in any one occurrence – three hundred thousand and no/100 dollars ($300,000 00), and
- For injury to or destruction of property in any one occurrence – one hundred thousand and no/100 dollars ($100,000 00)

This insurance shall be either on an occurrence basis or on a claims made basis Provided however, that if the coverage is on a claims made basis, then the vendor shall be required to purchase, at the termination of this agreement, tail coverage for the County for the period of the County's relationship with the vendor under this agreement Such coverage shall be in the amounts set forth in subparagraphs (1), (2), and (3) above

Worker's Compensation Insurance:

Successful vendor shall also carry in full force Workers' Compensation Insurance policy(ies), if there is more than one employee, for all employees, including but not limited to full time, part time, and emergency employees employed by the vendor Current insurance certificates certifying that such policies as specified above are in full force and effect shall be furnished by the vendor to the County

The County of Galveston shall be named as additional insured on policies listed in subparagraphs above and shall be notified of any changes to the policy(ies) during the contractual period. Insurance is to be placed with insurers having a Best rating of no less than A The vendor shall furnish the County with certificates of insurance and original endorsements affecting coverage required by these insurance clauses The certificates and endorsements for each insurance policy are to be signed by a person authorized by the insurer to bind coverage on its behalf The vendor shall be required to submit annual renewals for the term of any contractual agreement, purchase order or term contract, with Galveston County prior to expiration of any policy

In addition to the remedies stated herein, the County has the right to pursue other remedies permitted by law or in equity

The County agrees to provide vendor with reasonable and timely notice of any claim, demand, or cause of action made or brought against the County arising out of or related to utilization of the property Vendor shall have the right to defend any such claim, demand, or cause of action at its sole cost and expense and within its sole and exclusive discretion The County agrees not to compromise or settle any claim or cause of action arising out of or related to the utilization of the property without the prior written consent of the vendor

In no event shall the County be liable for any damage to or destruction of any property belonging to the vendor unless specified in writing and agreed upon by both parties

Procurement Policy - Special Note:

Understand that it is, according to Texas Local Government Code, Section 262 011, Purchasing Agents, subsections (d), (e), and (f), the sole responsibility of the Purchasing Agent to supervise all procurement transactions

Therefore, be advised that all procurement transactions require proper authorization in the form of a Galveston County purchase order from the Purchasing Agent's office prior to commitment to deliver supplies, materials, equipment, including contracts for repair, service, and maintenance agreements Any commitments made without proper authorization from the Purchasing Agent's office, pending Commissioners' Court approval, may become the sole responsibility of the individual making the commitment including the obligation of payment

Code of Ethics - Statement of Purchasing Policy:

Public employment is a public trust It is the policy of Galveston County to promote and balance the objective of protecting the County's integrity and the objective of facilitating the recruitment and

retention of personnel needed by Galveston County Such policy is implemented by prescribing essential standards of ethical conduct without creating unnecessary obstacles to entering public office

Public employees must discharge their duties impartially so as to assure fair competitive access to governmental procurement by responsible contractors Moreover, they should conduct themselves in such a manner as to foster public confidence in the integrity of the Galveston County procurement organization

To achieve the purpose of these instructions, it is essential that those doing business with Galveston County also observe the ethical standards prescribed here

General Ethical Standards: It shall be a breach of ethics to attempt to realize personal gain through public employment with Galveston County by any conduct inconsistent with the proper discharge of the employee's duties

It shall be a breach of ethics to attempt to influence any public employee of Galveston County to breach the standards of ethical conduct set forth in this code

It shall be a breach of ethics for any employee of Galveston County to participate directly or indirectly in procurement when the employee knows that

- The employee or any member of the employee's immediate family has a financial interest pertaining to the procurement
- A business or organization in which the employee, or any member of the employee's immediate family, has a financial interest pertaining to the procurement
- Any other person, business or organization with which the employee or any member of the employee's immediate family is negotiating or has an arrangement concerning prospective employment is involved in the procurement

Gratuities: It shall be a breach of ethics to offer, give or agree to give any employee of Galveston County, or for any employee or former employee of Galveston County to solicit, demand, accept or agree to accept from another person, a gratuity or an offer of employment in connection with any decision, approval, disapproval, recommendation, preparation of any part of a program requirement or purchase request, influencing the content of any specification or procurement standard, rendering of advice, investigation, auditing, or in any other advisory capacity in any program requirement or a contract or subcontract, or to any solicitation or proposal therefore pending before this government

Kickbacks: It shall be a breach of ethics for any payment, gratuity or offer of employment to be made by or on behalf of a subcontractor under a contract to the prime contractor or higher tier subcontractor for any contract for Galveston County, or any person associated therewith, as an inducement for the award of a subcontract or order

Contract Clause: The prohibition against gratuities and kickbacks prescribed above shall be conspicuously set forth in every contract and solicitation by Galveston County

Confidential Information: It shall be a breach of ethics for any employee or former employee of Galveston County to knowingly use confidential information for actual or anticipated personal gain, or for the actual or anticipated gain of any person

Questions/Concerns:
If you have any questions or concerns regarding the information or instructions contained within this packet, please contact any member of the Purchasing Department staff at **(409) 770-5371**

Conflict of Interest Forms

Conflict of Interest Reporting:

Proposer may be required under Chapter 176 of the Texas Local Government Code to complete and file a conflict of interest questionnaire (CIQ Form) with the County Clerk of Galveston County, Texas

If Proposer has an employment or other business relationship with an officer of Galveston County or with a family member of an officer of Galveston County that results in the officer or family member of the officer receiving taxable income that exceeds $2,500 00 during the preceding 12-month period, then Proposer **MUST** complete and file a CIQ Form as required under Chapter 176

If Proposer has given an officer of Galveston County or a family member of an officer of Galveston County one or more gifts with an aggregate value of more than $250 00 during the preceding 12-months, then Proposer **MUST** complete and file a CIQ Form as required under Chapter 176

A blank CIQ Form is enclosed with this proposal Blank CIQ Forms may also be obtained by visiting the Galveston County Clerk's website and/or the Purchasing Agent's website – both of these web sites are linked to the Galveston County homepage, at http //www co galveston tx us Blank CIQ Forms may also be obtained by visiting the Texas Ethics Commission website, specifically at http //www ethics state tx us/whatsnew/conflict_forms htm

Chapter 176 specifies deadlines for the filing of CIQ Forms (both initial filings and updated filings)

It is Proposer's sole responsibility to file a true and complete CIQ Form with the Galveston County Clerk if required Proposer is advised that it is an offense to fail to comply with the disclosure reporting requirements dictated under Chapter 176

In the event Proposer believes that it is not required to file the CIQ Form, then Proposer hereby **CERTIFIES** that by submission of its proposal without the enclosed copy of the filed CIQ Form, that Proposer is not currently required to file a CIQ Form

If you have questions about compliance with Chapter 176, please consult your own legal counsel Compliance is the individual responsibility of each person, business, and agent who is subject to Chapter 176 of the Texas Local Government Code

All information provided on the submitted forms must be typed or plainly and legibly handwritten in blue or black ink In addition, wherever signatures are requested, the name(s) of the person(s) signing must be printed or typed directly beneath the signature line

Any document that is deemed not legible may cause vendor status to be suspended or denied until corrected

Forms CIS and CIQ must be filed with the County Clerk. The Galveston County Clerk has offices at the following locations

Galveston County Clerk
Galveston County Criminal Justice Center, Suite 2001
600 59th Street
Galveston, Texas 77551

Galveston County Clerk
North County Annex, 1st Floor
174 Calder Road
League City, Texas 77573

If you are required to report under Chapter 176 of the Texas Local Government Code, it is your sole responsibility to comply with the reporting requirements Compliance with Texas Local Government Code Chapter 176 is the individual responsibility of each local government officer, individual, business, and agent, as applicable Chapter 176 provides that failure to comply with the reporting requirements is an offense

COUNTY of GALVESTON
Purchasing Department

rev 1 3, March 29, 2010

FORM PEID:	Request for Person-Entity Identification Data

Instructions Please type or print clearly when completing sections 1 thru 4 and return completed form to

Galveston County Purchasing Agent
722 Moody Avenue (21st. Street), 5th Floor
Galveston, Texas 77550
(409) 770-5371 *office*
(409) 621-7987 *fax*

1.

Business Name:	
Attention Line:	

2.

Physical Address:			
City:		State:	Zip+4:

3.

Billing / Remit Address:			
City:		State:	Zip+4

4.

Main Contact Person:	
Main Phone Number:	
Fax Number:	
E-mail Address:	

Areas below are for County use only.

Requested By:	Phone / Ext. #
Department:	Date:

Action Requested - Check One:	IFAS PEID Vendor Number:	
( ) Add New	( ) Change Data	( ) Re-activate
( ) Inactivate	( ) Employee	( ) Attorney
( ) Landlord	( ) Foster Parent	( ) Refund
( ) One Time	( ) Foster Child	

Form **W-9**
(Rev January 2011)
Department of the Treasury
Internal Revenue Service

Request for Taxpayer Identification Number and Certification

Give Form to the requester Do not send to the IRS.

Print or type
See **Specific Instructions** on page 2

Name (as shown on your income tax return)

Business name/disregarded entity name if different from above

Check appropriate box for federal tax classification (required) ☐ Individual/sole proprietor ☐ C Corporation ☐ S Corporation ☐ Partnership ☐ Trust/estate

☐ Limited liability company Enter the tax classification (C=C corporation S=S corporation, P=partnership) ▶

☐ Other (see instructions) ▶

☐ Exempt payee

Address (number street and apt or suite no)

Requester's name and address (optional)

City state and ZIP code

List account number(s) here (optional)

Part I Taxpayer Identification Number (TIN)

Enter your TIN in the appropriate box The TIN provided must match the name given on the "Name" line to avoid backup withholding For individuals, this is your social security number (SSN) However, for a resident alien, sole proprietor, or disregarded entity, see the Part I instructions on page 3 For other entities, it is your employer identification number (EIN) If you do not have a number, see *How to get a TIN* on page 3

Social security number

☐☐☐ - ☐☐ - ☐☐☐☐

Note If the account is in more than one name, see the chart on page 4 for guidelines on whose number to enter

Employer identification number

☐☐ - ☐☐☐☐☐☐☐

Part II Certification

Under penalties of perjury, I certify that

1 The number shown on this form is my correct taxpayer identification number (or I am waiting for a number to be issued to me), and

2 I am not subject to backup withholding because (a) I am exempt from backup withholding, or (b) I have not been notified by the Internal Revenue Service (IRS) that I am subject to backup withholding as a result of a failure to report all interest or dividends, or (c) the IRS has notified me that I am no longer subject to backup withholding, and

3 I am a U S citizen or other U S person (defined below)

Certification instructions You must cross out item 2 above if you have been notified by the IRS that you are currently subject to backup withholding because you have failed to report all interest and dividends on your tax return For real estate transactions, item 2 does not apply For mortgage interest paid acquisition or abandonment of secured property, cancellation of debt, contributions to an individual retirement arrangement (IRA), and generally, payments other than interest and dividends, you are not required to sign the certification, but you must provide your correct TIN See the instructions on page 4

Sign Here **Signature of U S person ▶** **Date ▶**

General Instructions

Section references are to the Internal Revenue Code unless otherwise noted

Purpose of Form

A person who is required to file an information return with the IRS must obtain your correct taxpayer identification number (TIN) to report, for example income paid to you, real estate transactions, mortgage interest you paid, acquisition or abandonment of secured property, cancellation of debt, or contributions you made to an IRA

Use Form W-9 only if you are a U S person (including a resident alien), to provide your correct TIN to the person requesting it (the requester) and, when applicable to

1 Certify that the TIN you are giving is correct (or you are waiting for a number to be issued),

2 Certify that you are not subject to backup withholding, or

3 Claim exemption from backup withholding if you are a U S exempt payee If applicable, you are also certifying that as a U S person, your allocable share of any partnership income from a U S trade or business is not subject to the withholding tax on foreign partners' share of effectively connected income

Note If a requester gives you a form other than Form W-9 to request your TIN, you must use the requester s form if it is substantially similar to this Form W-9

Definition of a U S person For federal tax purposes you are considered a U S person if you are

- An individual who is a U S citizen or U S resident alien,
- A partnership, corporation, company, or association created or organized in the United States or under the laws of the United States
- An estate (other than a foreign estate) or
- A domestic trust (as defined in Regulations section 301 7701-7)

Special rules for partnerships Partnerships that conduct a trade or business in the United States are generally required to pay a withholding tax on any foreign partners' share of income from such business Further in certain cases where a Form W-9 has not been received a partnership is required to presume that a partner is a foreign person and pay the withholding tax Therefore, if you are a U S person that is a partner in a partnership conducting a trade or business in the United States, provide Form W-9 to the partnership to establish your U S status and avoid withholding on your share of partnership income

The person who gives Form W-9 to the partnership for purposes of establishing its U S status and avoiding withholding on its allocable share of net income from the partnership conducting a trade or business in the United States is in the following cases

- The U S owner of a disregarded entity and not the entity,
- The U S grantor or other owner of a grantor trust and not the trust, and
- The U S trust (other than a grantor trust) and not the beneficiaries of the trust

Foreign person If you are a foreign person, do not use Form W-9 Instead, use the appropriate Form W-8 (see Publication 515, Withholding of Tax on Nonresident Aliens and Foreign Entities)

Nonresident alien who becomes a resident alien Generally, only a nonresident alien individual may use the terms of a tax treaty to reduce or eliminate U S tax on certain types of income However, most tax treaties contain a provision known as a "saving clause " Exceptions specified in the saving clause may permit an exemption from tax to continue for certain types of income even after the payee has otherwise become a U S resident alien for tax purposes

If you are a U S resident alien who is relying on an exception contained in the saving clause of a tax treaty to claim an exemption from U S tax on certain types of income, you must attach a statement to Form W-9 that specifies the following five items

1 The treaty country Generally, this must be the same treaty under which you claimed exemption from tax as a nonresident alien

2 The treaty article addressing the income

3 The article number (or location) in the tax treaty that contains the saving clause and its exceptions

4 The type and amount of income that qualifies for the exemption from tax

5 Sufficient facts to justify the exemption from tax under the terms of the treaty article

Example Article 20 of the U S -China income tax treaty allows an exemption from tax for scholarship income received by a Chinese student temporarily present in the United States Under U S law, this student will become a resident alien for tax purposes if his or her stay in the United States exceeds 5 calendar years However, paragraph 2 of the first Protocol to the U S -China treaty (dated April 30, 1984) allows the provisions of Article 20 to continue to apply even after the Chinese student becomes a resident alien of the United States A Chinese student who qualifies for this exception (under paragraph 2 of the first protocol) and is relying on this exception to claim an exemption from tax on his or her scholarship or fellowship income would attach to Form W-9 a statement that includes the information described above to support that exemption

If you are a nonresident alien or a foreign entity not subject to backup withholding, give the requester the appropriate completed Form W-8

What is backup withholding? Persons making certain payments to you must under certain conditions withhold and pay to the IRS a percentage of such payments This is called "backup withholding " Payments that may be subject to backup withholding include interest, tax-exempt interest dividends, broker and barter exchange transactions, rents, royalties, nonemployee pay, and certain payments from fishing boat operators Real estate transactions are not subject to backup withholding

You will not be subject to backup withholding on payments you receive if you give the requester your correct TIN, make the proper certifications and report all your taxable interest and dividends on your tax return

Payments you receive will be subject to backup withholding if

1 You do not furnish your TIN to the requester,

2 You do not certify your TIN when required (see the Part II instructions on page 3 for details),

3 The IRS tells the requester that you furnished an incorrect TIN,

4 The IRS tells you that you are subject to backup withholding because you did not report all your interest and dividends on your tax return (for reportable interest and dividends only) or

5 You do not certify to the requester that you are not subject to backup withholding under 4 above (for reportable interest and dividend accounts opened after 1983 only)

Certain payees and payments are exempt from backup withholding See the instructions below and the separate Instructions for the Requester of Form W-9

Also see *Special rules for partnerships* on page 1

Updating Your Information

You must provide updated information to any person to whom you claimed to be an exempt payee if you are no longer an exempt payee and anticipate receiving reportable payments in the future from this person For example, you may need to provide updated information if you are a C corporation that elects to be an S corporation, or if you no longer are tax exempt In addition, you must furnish a new Form W-9 if the name or TIN changes for the account for example if the grantor of a grantor trust dies

Penalties

Failure to furnish TIN If you fail to furnish your correct TIN to a requester, you are subject to a penalty of $50 for each such failure unless your failure is due to reasonable cause and not to willful neglect

Civil penalty for false information with respect to withholding If you make a false statement with no reasonable basis that results in no backup withholding, you are subject to a $500 penalty

Criminal penalty for falsifying information Willfully falsifying certifications or affirmations may subject you to criminal penalties including fines and/or imprisonment

Misuse of TINs If the requester discloses or uses TINs in violation of federal law, the requester may be subject to civil and criminal penalties

Specific Instructions

Name

If you are an individual, you must generally enter the name shown on your income tax return However, if you have changed your last name, for instance, due to marriage without informing the Social Security Administration of the name change, enter your first name, the last name shown on your social security card, and your new last name

If the account is in joint names, list first, and then circle the name of the person or entity whose number you entered in Part I of the form

Sole proprietor. Enter your individual name as shown on your income tax return on the "Name" line You may enter your business, trade, or 'doing business as (DBA)" name on the "Business name/disregarded entity name" line

Partnership, C Corporation, or S Corporation Enter the entity's name on the "Name" line and any business, trade, or ' doing business as (DBA) name" on the ' Business name/disregarded entity name ' line

Disregarded entity Enter the owner's name on the "Name" line The name of the entity entered on the "Name" line should never be a disregarded entity The name on the "Name" line must be the name shown on the income tax return on which the income will be reported For example, if a foreign LLC that is treated as a disregarded entity for U S federal tax purposes has a domestic owner, the domestic owner s name is required to be provided on the 'Name" line If the direct owner of the entity is also a disregarded entity, enter the first owner that is not disregarded for federal tax purposes Enter the disregarded entity s name on the "Business name/disregarded entity name' line If the owner of the disregarded entity is a foreign person, you must complete an appropriate Form W-8

Note Check the appropriate box for the federal tax classification of the person whose name is entered on the ' Name" line (Individual/sole proprietor, Partnership C Corporation S Corporation Trust/estate)

Limited Liability Company (LLC) If the person identified on the "Name" line is an LLC, check the "Limited liability company" box only and enter the appropriate code for the tax classification in the space provided If you are an LLC that is treated as a partnership for federal tax purposes, enter "P" for partnership If you are an LLC that has filed a Form 8832 or a Form 2553 to be taxed as a corporation, enter C" for C corporation or 'S" for S corporation If you are an LLC that is disregarded as an entity separate from its owner under Regulation section 301 7701-3 (except for employment and excise tax), do not check the LLC box unless the owner of the LLC (required to be identified on the "Name" line) is another LLC that is not disregarded for federal tax purposes If the LLC is disregarded as an entity separate from its owner, enter the appropriate tax classification of the owner identified on the "Name" line

Other entities Enter your business name as shown on required federal tax documents on the "Name" line This name should match the name shown on the charter or other legal document creating the entity You may enter any business, trade, or DBA name on the "Business name/ disregarded entity name" line

Exempt Payee

If you are exempt from backup withholding, enter your name as described above and check the appropriate box for your status, then check the "Exempt payee" box in the line following the "Business name/ disregarded entity name," sign and date the form

Generally, individuals (including sole proprietors) are not exempt from backup withholding Corporations are exempt from backup withholding for certain payments, such as interest and dividends

Note If you are exempt from backup withholding, you should still complete this form to avoid possible erroneous backup withholding

The following payees are exempt from backup withholding

1 An organization exempt from tax under section 501(a), any IRA, or a custodial account under section 403(b)(7) if the account satisfies the requirements of section 401(f)(2)

2 The United States or any of its agencies or instrumentalities,

3 A state, the District of Columbia, a possession of the United States, or any of their political subdivisions or instrumentalities,

4 A foreign government or any of its political subdivisions, agencies, or instrumentalities, or

5 An international organization or any of its agencies or instrumentalities

Other payees that may be exempt from backup withholding include

6 A corporation,

7 A foreign central bank of issue,

8 A dealer in securities or commodities required to register in the United States, the District of Columbia or a possession of the United States

9 A futures commission merchant registered with the Commodity Futures Trading Commission,

10 A real estate investment trust,

11 An entity registered at all times during the tax year under the Investment Company Act of 1940,

12 A common trust fund operated by a bank under section 584(a),

13 A financial institution,

14 A middleman known in the investment community as a nominee or custodian or

15 A trust exempt from tax under section 664 or described in section 4947

The following chart shows types of payments that may be exempt from backup withholding The chart applies to the exempt payees listed above, 1 through 15

IF the payment is for	THEN the payment is exempt for . .
Interest and dividend payments	All exempt payees except for 9
Broker transactions	Exempt payees 1 through 5 and 7 through 13 Also, C corporations
Barter exchange transactions and patronage dividends	Exempt payees 1 through 5
Payments over $600 required to be reported and direct sales over $5,000 [1]	Generally, exempt payees 1 through 7

[1] See Form 1099 MISC Miscellaneous Income and its instructions

[2] However, the following payments made to a corporation and reportable on Form 1099-MISC are not exempt from backup withholding medical and health care payments attorneys' fees gross proceeds paid to an attorney and payments for services paid by a federal executive agency

Part I. Taxpayer Identification Number (TIN)

Enter your TIN in the appropriate box If you are a resident alien and you do not have and are not eligible to get an SSN, your TIN is your IRS individual taxpayer identification number (ITIN) Enter it in the social security number box If you do not have an ITIN, see *How to get a TIN* below

If you are a sole proprietor and you have an EIN, you may enter either your SSN or EIN However, the IRS prefers that you use your SSN

If you are a single-member LLC that is disregarded as an entity separate from its owner (see *Limited Liability Company (LLC)* on page 2), enter the owner's SSN (or EIN, if the owner has one) Do not enter the disregarded entity's EIN If the LLC is classified as a corporation or partnership, enter the entity's EIN

Note See the chart on page 4 for further clarification of name and TIN combinations

How to get a TIN If you do not have a TIN, apply for one immediately To apply for an SSN, get Form SS-5, Application for a Social Security Card, from your local Social Security Administration office or get this form online at *www ssa gov* You may also get this form by calling 1-800-772-1213 Use Form W-7, Application for IRS Individual Taxpayer Identification Number, to apply for an ITIN, or Form SS-4, Application for Employer Identification Number, to apply for an EIN You can apply for an EIN online by accessing the IRS website at *www irs gov/businesses* and clicking on Employer Identification Number (EIN) under Starting a Business You can get Forms W-7 and SS-4 from the IRS by visiting IRS gov or by calling 1-800-TAX-FORM (1-800-829-3676)

If you are asked to complete Form W-9 but do not have a TIN, write "Applied For" in the space for the TIN, sign and date the form, and give it to the requester For interest and dividend payments, and certain payments made with respect to readily tradable instruments, generally you will have 60 days to get a TIN and give it to the requester before you are subject to backup withholding on payments The 60-day rule does not apply to other types of payments You will be subject to backup withholding on all such payments until you provide your TIN to the requester

Note Entering "Applied For" means that you have already applied for a TIN or that you intend to apply for one soon

Caution *A disregarded domestic entity that has a foreign owner must use the appropriate Form W-8*

Part II. Certification

To establish to the withholding agent that you are a U S person, or resident alien, sign Form W-9 You may be requested to sign by the withholding agent even if item 1, below, and items 4 and 5 on page 4 indicate otherwise

For a joint account, only the person whose TIN is shown in Part I should sign (when required) In the case of a disregarded entity, the person identified on the "Name" line must sign Exempt payees, see *Exempt Payee* on page 3

Signature requirements Complete the certification as indicated in items 1 through 3, below, and items 4 and 5 on page 4

1. Interest, dividend, and barter exchange accounts opened before 1984 and broker accounts considered active during 1983 You must give your correct TIN but you do not have to sign the certification

2 Interest, dividend, broker, and barter exchange accounts opened after 1983 and broker accounts considered inactive during 1983 You must sign the certification or backup withholding will apply If you are subject to backup withholding and you are merely providing your correct TIN to the requester, you must cross out item 2 in the certification before signing the form

3 Real estate transactions You must sign the certification You may cross out item 2 of the certification

4 Other payments You must give your correct TIN, but you do not have to sign the certification unless you have been notified that you have previously given an incorrect TIN "Other payments" include payments made in the course of the requester's trade or business for rents, royalties, goods (other than bills for merchandise), medical and health care services (including payments to corporations), payments to a nonemployee for services, payments to certain fishing boat crew members and fishermen, and gross proceeds paid to attorneys (including payments to corporations)

5 Mortgage interest paid by you, acquisition or abandonment of secured property, cancellation of debt, qualified tuition program payments (under section 529), IRA, Coverdell ESA, Archer MSA or HSA contributions or distributions, and pension distributions You must give your correct TIN, but you do not have to sign the certification

What Name and Number To Give the Requester

For this type of account	Give name and SSN of
1 Individual	The individual
2 Two or more individuals (joint account)	The actual owner of the account or if combined funds the first individual on the account
3 Custodian account of a minor (Uniform Gift to Minors Act)	The minor [2]
4 a The usual revocable savings trust (grantor is also trustee)	The grantor-trustee [1]
b So-called trust account that is not a legal or valid trust under state law	The actual owner
5 Sole proprietorship or disregarded entity owned by an individual	The owner [3]
6 Grantor trust filing under Optional Form 1099 Filing Method 1 (see Regulation section 1 671 4(b)(2)(i)(A))	The grantor*
For this type of account	**Give name and EIN of:**
7 Disregarded entity not owned by an individual	The owner
8 A valid trust estate or pension trust	Legal entity [4]
9 Corporation or LLC electing corporate status on Form 8832 or Form 2553	The corporation
10 Association club religious charitable educational or other tax exempt organization	The organization
11 Partnership or multi-member LLC	The partnership
12 A broker or registered nominee	The broker or nominee
13 Account with the Department of Agriculture in the name of a public entity (such as a state or local government school district or prison) that receives agricultural program payments	The public entity
14 Grantor trust filing under the Form 1041 Filing Method or the Optional Form 1099 Filing Method 2 (see Regulation section 1 671 4(b)(2)(i)(B))	The trust

[1] List first and circle the name of the person whose number you furnish If only one person on a joint account has an SSN that person s number must be furnished

Circle the minor's name and furnish the minor s SSN

[3] You must show your individual name and you may also enter your business or DBA name on the Business name/disregarded entity name line You may use either your SSN or EIN (if you have one) but the IRS encourages you to use your SSN

[4] List first and circle the name of the trust estate or pension trust (Do not furnish the TIN of the personal representative or trustee unless the legal entity itself is not designated in the account title) Also see *Special rules for partnerships* on page 1

***Note** Grantor also must provide a Form W-9 to trustee of trust

Note If no name is circled when more than one name is listed, the number will be considered to be that of the first name listed

Secure Your Tax Records from Identity Theft

Identity theft occurs when someone uses your personal information such as your name, social security number (SSN), or other identifying information, without your permission, to commit fraud or other crimes An identity thief may use your SSN to get a job or may file a tax return using your SSN to receive a refund

To reduce your risk

- Protect your SSN,
- Ensure your employer is protecting your SSN, and
- Be careful when choosing a tax preparer

If your tax records are affected by identity theft and you receive a notice from the IRS, respond right away to the name and phone number printed on the IRS notice or letter

If your tax records are not currently affected by identity theft but you think you are at risk due to a lost or stolen purse or wallet, questionable credit card activity or credit report contact the IRS Identity Theft Hotline at 1-800-908-4490 or submit Form 14039

For more information, see Publication 4535, Identity Theft Prevention and Victim Assistance

Victims of identity theft who are experiencing economic harm or a system problem, or are seeking help in resolving tax problems that have not been resolved through normal channels, may be eligible for Taxpayer Advocate Service (TAS) assistance You can reach TAS by calling the TAS toll-free case intake line at 1-877-777-4778 or TTY/TDD 1-800-829-4059

Protect yourself from suspicious emails or phishing schemes Phishing is the creation and use of email and websites designed to mimic legitimate business emails and websites The most common act is sending an email to a user falsely claiming to be an established legitimate enterprise in an attempt to scam the user into surrendering private information that will be used for identity theft

The IRS does not initiate contacts with taxpayers via emails Also, the IRS does not request personal detailed information through email or ask taxpayers for the PIN numbers, passwords, or similar secret access information for their credit card bank, or other financial accounts

If you receive an unsolicited email claiming to be from the IRS, forward this message to *phishing@irs gov* You may also report misuse of the IRS name, logo, or other IRS property to the Treasury Inspector General for Tax Administration at 1-800-366-4484 You can forward suspicious emails to the Federal Trade Commission at *spam@uce gov* or contact them at *www ftc gov/idtheft* or 1-877-IDTHEFT (1-877-438-4338)

Visit IRS gov to learn more about identity theft and how to reduce your risk

Privacy Act Notice

Section 6109 of the Internal Revenue Code requires you to provide your correct TIN to persons (including federal agencies) who are required to file information returns with the IRS to report interest dividends or certain other income paid to you, mortgage interest you paid, the acquisition or abandonment of secured property the cancellation of debt or contributions you made to an IRA Archer MSA or HSA The person collecting this form uses the information on the form to file information returns with the IRS reporting the above information Routine uses of this information include giving it to the Department of Justice for civil and criminal litigation and to cities states the District of Columbia and U S possessions for use in administering their laws The information also may be disclosed to other countries under a treaty to federal and state agencies to enforce civil and criminal laws or to federal law enforcement and intelligence agencies to combat terrorism You must provide your TIN whether or not you are required to file a tax return Under section 3406, payers must generally withhold a percentage of taxable interest dividend and certain other payments to a payee who does not give a TIN to the payer Certain penalties may also apply for providing false or fraudulent information

CONFLICT OF INTEREST QUESTIONNAIRE

FORM CIQ

For vendor or other person doing business with local governmental entity

This questionnaire reflects changes made to the law by H B 1491, 80th Leg , Regular Session

This questionnaire is being filed in accordance with Chapter 176, Local Government Code by a person who has a business relationship as defined by Section 176 001(1-a) with a local governmental entity and the person meets requirements under Section 176 006(a)

By law this questionnaire must be filed with the records administrator of the local governmental entity not later than the 7th business day after the date the person becomes aware of facts that require the statement to be filed See Section 176 006, Local Government Code

A person commits an offense if the person knowingly violates Section 176 006, Local Government Code An offense under this section is a Class C misdemeanor

OFFICE USE ONLY

Date Received

1 **Name of person who has a business relationship with local governmental entity**

2 ☐ **Check this box if you are filing an update to a previously filed questionnaire.**

(The law requires that you file an updated completed questionnaire with the appropriate filing authority not later than the 7th business day after the date the originally filed questionnaire becomes incomplete or inaccurate)

3 **Name of local government officer with whom filer has employment or business relationship**

_____

Name of Officer

This section (item 3 including subparts A, B, C & D) must be completed for each officer with whom the filer has an employment or other business relationship as defined by Section 176 001(1-a), Local Government Code Attach additional pages to this Form CIQ as necessary

A Is the local government officer named in this section receiving or likely to receive taxable income, other than investment income, from the filer of the questionnaire?

☐ Yes ☐ No

B Is the filer of the questionnaire receiving or likely to receive taxable income, other than investment income, from or at the direction of the local government officer named in this section AND the taxable income is not received from the local governmental entity?

☐ Yes ☐ No

C Is the filer of this questionnaire employed by a corporation or other business entity with respect to which the local government officer serves as an officer or director, or holds an ownership of 10 percent or more?

☐ Yes ☐ No

D Describe each employment or business relationship with the local government officer named in this section

4

_____ _____

Signature of person doing business with the governmental entity Date

Adopted 06/29/2007

INSTRUCTIONS TO BIDDERS

1 BID PACKAGE

This bid package consists of the Invitation to Bid, the Instructions to Bidders, the bid proposal, the unexecuted Notice of Contract Award, the Special and General Terms and Conditions, any drawings and specifications, and any addenda which the County may issue prior to receipt of bids

2. REVIEW

Each bidder is required to thoroughly review this entire bid packet to familiarize themselves with the bidding procedures, the plans and specifications for the requested work as well as the terms, and conditions of the contact the successful bidder will execute with the County.

3 PRE-BID MODIFICATIONS

Any modification to any portion of this bid packet will be in writing in the form of addenda All addenda will be mailed to all holders of plans and specifications at least three (3) days prior to the date of opening bids Bidders should inquire whether addenda have been issued inasmuch as Bidders shall be bound by such addenda whether or not received

4 BID FORMS

All bids must be submitted on forms furnished by County

5 TIME FOR RECEIVING BIDS

Bids received prior to the submission deadline will be maintained unopened until the specified time for bid opening. If the bidder fails to identify the Bid Number on the outside of the envelope as required, the Purchasing Agent will open the envelope for the sole

purpose of identifying the Bid Number for which the submission was made. The envelope will then be resealed No liability will attach to a County officer or employee for the premature opening of a bid

6 **TERM**

The term of the contract will begin on the date of execution by the County and will terminate on the date specified in the document entitled "Contract Award"

7 **AWARD OF BID**

The award will be to the responsive, responsible bidder(s) who submits the lowest and best bid Criteria utilized for determining responsibility of bidder(s) includes, the bidder's experience, skill, ability, business judgment, financial capacity, integrity, honesty, possession of the necessary facilities or equipment, previous performance, reputation, promptness and any other factor deemed relevant by the County The bidder shall furnish any information requested by the County in order for the County to determine whether a bidder is responsible

8 **SUBSTITUTES**

It is not the County's intent to discriminate against any materials of equal merit to those specified, however, should the Bidder desire to use any substitutions, prior written approval shall be obtained from the County sufficiently in advance in order that an addendum might be issued

9 **REJECTION OF BIDS**

The County, acting through its County Commissioners' Court reserves the right to (1) reject any and all bids and waive any informality in the bids received, (2) disregard the bid of any Bidder determined to be not responsible

10 **BID BOND**

Each Bidder will be required to furnish with his bid a Cashier's or Certified Check from any bank in the State of Texas or an acceptable Bidder's Bond for the sum of 5% of the total highest bid payable to the County of Galveston The certified check or Bid Bond will be returned to the unsuccessful Bidder(s) and to the successful Bidder on the completion of execution of all contract documents and the furnishing of any necessary payment and performance bonds and insurance certificates

The bid bond or check will be forfeited to the County as liquidated damages should the successful Bidder fail to give the required payment and performance bonds and insurance certificates and execute the contract with the said County within thirty (30) days after receiving notice of acceptance of its bid

11 **PERFORMANCE AND PAYMENT BOND**

V T C.A., Government Code Chapter 2253, requires a Performance Bond (for contracts in excess of $100,000) and a Payment Bond (for contracts in excess of $25,000), be provided by the Contractor Each bond required shall be equal to the total contract price and shall be issued by a satisfactory surety company The bond(s) will remain in full force and effect until final completion and acceptance of the work

The bond(s) are to be made payable to the County of Galveston They shall be written on forms provided by the surety for public works projects in Texas They shall also be executed by a surety and licensed to do business in Texas

Bidders should familiarize themselves with the entire provisions of V T C A , Chapter 2253 and the penalties provided for its violations before submitting their bid

12 **CONTRACT**

The contract shall become effective upon the Commissioners' Court's execution of same. The contract documents shall consist of the contract, the general and special conditions, the drawings, the bid package, any addenda issued, and any change orders issued during the work

13 **TAX EXEMPTION**

This contract is issued by a political subdivision of the State of Texas which qualifies for exemption from sales, excise and use taxes pursuant to Section 151 309, Texas Tax Code

The Contractor performing this contract may purchase, rent or lease all materials, supplies, equipment used or consumed in the performance of this contract by issuing to his supplier an exemption certificate complying with State Comptroller's Ruling #95-9 07 in lieu of the tax Any such exemption certificate issued by the Contractor in lieu of the tax shall be subject to the provisions of the State Comptroller's ruling #95 05 (effective October 2, 1968) or as hereafter amended

SECTION II

Bid Proposal

Contract Award

CONTRACT AWARD

CONTRACT FOR: **Stewart Road Paving and Drainage Improvements from 7 ½ Mile Road to Cove View**

THIS CONTRACT IS ENTERED INTO BETWEEN GALVESTON COUNTY AND THE CONTRACTOR NAMED BELOW PURSUANT TO SUBCHAPTER B, CHAPTER 271, TEXAS LOCAL GOVERNMENT CODE, AND THE REFERENCED INVITATION TO BID

Contract No **1087**

Bid No: B121027

Contractor R W LUCAS CONSTRUCTION,LLC

The Specifications and Drawings are enumerated as follows

Standard Specifications **Standard Specifications For Construction And Maintenance Of Highways, Streets And Bridges; adopted by the Texas Department Of Transportation, June 2004**

Special Provisions **To Items 1 thru 9**
Item 305: Salvaging, Hauling, and Stockpiling Reclaimable Asphalt Pavement
Item 464: Reinforced Concrete Pipe
Item 474: Slotted Drain
Item 500: Mobilization

Special Items

DRAWINGS **1 Thru 181**
ADDENDA **1-3**

Contract Award (continued)

Sections I (Invitation to Bid, General Provisions, Instructions to Bidders, Vendor Qualification Packet), II (Bid Proposal, Contract Award), III (Special Terms and Conditions, [including Addenda], Wage Rates & AIA Forms), IV (General Terms and Conditions), V (Specifications) and VI (Plans) attached to this Contract Award are all made a part of this Contract and collectively evidence and constitute the entire contract Contractor shall furnish all materials, perform all of the work required to be done and do everything else required by these documents

Time of Completion The Contractor shall complete the work within 240 Calendar Days of the issuance of the notice to proceed The time set forth for completion of the work is an essential element of the Contract

The Contract Sum The County shall pay the Contractor for performance of the Contract, the sum of **Three Million Four Hundred Seventeen Thousand Six Hundred Sixty Seven and 99/100** Dollars and No/100 ($ **3,417,667.99**), payments to be made as described herein

Performance Bond required (x) yes ( ) no
Payment Bond required (x) yes ( ) no

This Contract is issued pursuant to award made by Commissioners' Court on **21 August**, 20 **12**

EXECUTED this 4th day of September, 20 **12**

COUNTY OF GALVESTON, TEXAS

BY: Mark Henry
MARK HENRY, County Judge

ATTEST

DWIGHT D SULLIVAN, County Clerk
By: Brandy Chapman Deputy
Brandy Chapman

CONTRACTOR

BY: 8/31/2012
Signature - Title
Printed Name

RW LUCAS CONSTRUCTION, LLC
RYAN LUCAS
PRES

Binkley & Barfield, Inc
consulting engineers
Texas Registration Number F-257

Date Issued: June 27, 2012

Bid Addendum 1
Bid No. B121027

Stewart Road Paving and Drainage Improvements Project
from 7 ½ Mile Road to Cove View
Galveston County, TX

To All Prospective Bidders,

The Bid Opening Date for Bid No B121027, Stewart Road Paving and Drainage Improvement Project from 7 ½ Mile Road to Cove View originally scheduled for Thursday June 28, 2012 at 2:30 pm has been rescheduled The new deadline for submitting bids is as follows

Date: Tuesday, July 10, 2012
Time: 2:00 p.m.

All other terms and conditions remain unchanged.

End of Addendum

Direct all questions to

Rufus Crowder
Purchasing Agent
Galveston county

This Addendum must be *Signed & Returned* with your bid.

_____	RWLucas Construction, LLC
Authorized Signature of Bidder	Company Name

STATE OF TEXAS
JASON C. KASPAR
108672
LICENSED
PROFESSIONAL ENGINEER

Approved _____
Jason Kaspar, P.E.
Project Manager
Binkley & Barfield, Inc

Binkley & Barfield, Inc 1710 Seamist Drive, Houston, TX 77008 713 869.3433 FAX. 713 869 6702

Binkley & Barfield, Inc
consulting engineers
Texas Registration Number F-257

Date Issued. July 2, 2012

Bid Addendum 2
Bid No. B121027

Stewart Road Paving and Drainage Improvements Project
from 7 ½ Mile Road to Cove View
Galveston County, TX

To All Prospective Bidders,

Please incorporate the following revisions and/or clarifications into the bid.

Clarifications:

Question No 1: Can fittings (8" & 16") on water line be C153?
Response No. 1: Fittings (AWWA C153) will be allowed for 8-inch waterline only.

Question No 2: Do all bolts have to be stainless steel? Phase 1 does not require such
Response No. 2: All bolts need to be stainless steel.

Question No. 3: Is wet trench bedding considered incidental? If so, who's decision is it when this will be used or not used?
Response No. 3: Wet trench bedding is incidental to waterline construction. The owner's representative will determine when wet trench bedding is required in accordance with the specifications.

Question No. 4: Can a minimum price be inserted on well pointing to prevent unbalanced bidding?
Response No. 4. Bid Form – Alternate Waterline Bid - Line item 17 (01563 Furnish and Install Well Pointing): Minimum bid price for well pointing has been added as noted below in Revision #1.

Question No. 5: Why is the minimum bedding on Phase 2 at 6' depth? This will significantly slow down the project and will almost assure that the entire project will be wet.
Response No. 5: A 5-foot minimum depth of cover will be allowed for the waterline construction Sheets revised as noted below in Revision #2.

Question No. 6: Are the drains on the retaining wall incidental?
Response No. 6: Drains on the retaining wall are incidental per note 11 on sheet 112 of the plans.

Binkley & Barfield, Inc 1710 Seamist Drive, Houston, TX 77008 713 869 3433 FAX: 713.869 6702

Binkley & Barfield, Inc
consulting engineers
Texas Registration Number F-257

Question No 7 Assuming stabilized sand bedding is 1 5 sac/cy as in phase 1
Response No 7 Per Roadway Drain Details (Slotted Drain) on sheet 69, minimum 2 sacks of cement per cubic yard All other cement stabilized backfill assumed to be 1 5 sac/cy

Question No 8 What is line item 17 for and why is it per sy? Why is this a plan quantity?
Response No 8 Bid Form – Line item 17 (400 – Cem Stabil Bkfl) is for Cross Culverts (sheets 57-59) and Slotted Drain (sheets 81-82) Item is a plan quantity per specification Unit revised in bid form as noted below in Revision #3.

Question No 9. Is the wage scale correct? It differs from phase 1
Response No. 9 Wage scale included is latest available (1/6/2012)

Question No. 10 Is the removal of all detours incidental?
Response No. 10. Per specification Item 508 Constructing Detours, removal of detours is included in bid price

Question No. 11. Where is the removal of the wood structure located. Item 35
Response No. 11· Bid Form – Line item 35 (496 – Remov Str (Wood Str)) is for the small bridge located at approx. station 19+80, plan sheet #73.

Question No 12 On sheet 146 there is a call out to remove and replace monument What is this? Will there be an item for such or is it incidental?
Response No. 12: The monument removal and replacement shown on sheet 146 will be incidental to the waterline construction as noted in Revision #6.

Question No. 13. Will trenchless construction require casing?
Response No. 13. Casing will not be required for trenchless construction

Question No. 14: The grout filling of the existing abandoned water lines is an unfair item on a per each basis. If 1 plug is deleted, that necessarily does not delete 1/6th of the grout filling? Can grout fill of abandoned lines be a separate item?
Response No 14. Bid Form – Alternative Waterline Bid: Added bid items for grout fill of abandoned waterlines as noted below in Revision #4 Revised specification as noted below in Revision #5

Binkley & Barfield, Inc 1710 Seamist Drive, Houston, TX 77008 713 869 3433 FAX: 713 869 6702

Binkley & Barfield, Inc
consulting engineers
Texas Registration Number F-257

Question No 15 The specs call for all long services to be in casing and bored. Is this correct or can they be open cut and do they have to be in casing. It so, what type of casing is required?

Response No 15 Long side services shall be constructed in accordance with specification 02665.

Question No. 16 In the event that a pamrex ring and cover is not part of the existing sanitary manhole, will we be required to replace the ring and cover as part of the manhole adjustment Please clarify as a pamrex ring and cover is very expensive

Response No. 16: Yes, pamrex ring and cover is required as requested by the City of Galveston. Note on sheet 156 states "Wastewater manholes to be adjusted and reset to match proposed pavement elevation. Reset Frame and Casting according to Item 479 – 2004 using 32" Pamrex Ring and Cover".

Question No 17 Are you specifying a TxDOT IOZ System III to a 3 mil min DFT 6' down on this job?

Response No 17 Per note #9 on plan sheet 112, "Steel sheet piling shall be painted in accordance with Item 446 Cleaning and Painting Steel. Painting shall extend 12 inches below the finished ground line " No system is specified.

Binkley & Barfield, Inc. 1710 Seamist Drive, Houston, TX 77008 713 869.3433 FAX· 713 869 6702

Binkley & Barfield, Inc
consulting engineers
Texas Registration Number F-257

Revisions:

1 Bid Form – Alternate Waterline Bid - Line item 17 (01563 Furnish and Install Well Pointing). Added minimum bid price for well pointing
2 Plan Sheets 141 to 152 of 181. The minimum depth of cover allowed is 5 feet unless shown otherwise.
3 Bid Form – Line item 17 (400 – Cem Stabil Bkfl) Unit revised to CY
4 Bid Form – Alternative Waterline Bid: Added bid items 27-29 for grout fill of abandoned waterlines
5. Specification Section 02669 – Cut, Plug and Abandonment of Mains. Remove No Separate Payment from Paragraph 3.01 G
6 Plan Sheet 146 of 181· Add "No Separate Pay" to "Remove and Replace Monument"
7 Bid Form – Alternative Waterline Bid - Line items 22-26. Added minimum bid price

All other terms and conditions remain unchanged.

End of Addendum

Direct all questions to

Rufus Crowder
Purchasing Agent
Galveston County

This Addendum must be *Signed & Returned* with your bid.

Authorized Signature of Bidder Company Name

STATE OF TEXAS
JASON C. KASPAR
108672
LICENSED
PROFESSIONAL ENGINEER

Approved

Jason Kaspar, P.E.
Project Manager
Binkley & Barfield, Inc.

Binkley & Barfield, Inc. 1710 Seamist Drive, Houston, TX 77008 713 869.3433 FAX. 713 869 6702

BID FORM
STEWART ROAD PAVING AND DRAINAGE IMPROVEMENT PROJECT
FROM 7 1/2 MILE ROAD TO COVE VIEW, GALVESTON, TEXAS

ITEM NO	SPEC NO	DESCRIPTION	UNIT	QNTY	MEASUREMENT	UNIT PRICE IN WORDS	UNIT PRICE	TOTAL PRICE
1	100	PREPARING ROW	STA	49	ACTUAL	DOLLARS AND _____ CENTS		
2	104	REMOVING CONC (DRIVEWAYS)	SY	134	PLANS	DOLLARS AND _____ CENTS		
3	110	EXCAVATION (ROADWAY)	CY	4683	PLANS	DOLLARS AND _____ CENTS		
4	132	EMBANKMENT (FINAL)(DENS CONT)(TY C)	CY	7700	PLANS	DOLLARS AND _____ CENTS		
5	161	COMPOST MANUF TOPSOIL (BIP) (4")	SY	30420	ACTUAL	DOLLARS AND _____ CENTS		
6	162	BLOCK SODDING	SY	2312	ACTUAL	DOLLARS AND _____ CENTS		
7	164	BROADCAST SEED (PERM)(RURAL)(SANDY)	SY	30217	ACTUAL	DOLLARS AND _____ CENTS		
8	260	LIME TRT (EXIST MATL) (8")	SY	27326	ACTUAL	DOLLARS AND _____ CENTS		
9	260	LIME (HYD, COM OR QK) (SLURRY)	TON	273 3	ACTUAL	DOLLARS AND _____ CENTS		
10	265	FLY ASH (CLASS CS)	TON	628 5	ACTUAL	DOLLARS AND _____ CENTS		
11	292	ASPHALT STAB BASE (GR 2) (PG 64)	TON	42 9	ACTUAL	DOLLARS AND _____ CENTS		
12	305	SALV HAUL & STKPL RCL APH PV (VAR DEPTH)	SY	14789	ACTUAL	DOLLARS AND _____ CENTS		
13	341	D-GR HMA (QCQA) TY D PG 70-22	TON	14 3	ACTUAL	DOLLARS AND _____ CENTS		
14	360	CONC PVMT (CONT REINF-CRCP)(8")	SY	25151	ACTUAL	DOLLARS AND _____ CENTS		
15	360	CONC PVMT (CONT REINF-CRCP)(6")	SY	1286	ACTUAL	DOLLARS AND _____ CENTS		
16	360	CONC PVMT (CONT REINF CRCP)(7")	SY	841	ACTUAL	DOLLARS AND _____ CENTS		
17	400	CEM STABIL BKFL	CY	185	PLANS	DOLLARS AND _____ CENTS		
18	432	RIPRAP (STONE)(COMMON)(DRY)(12 IN)	CY	7	ACTUAL	DOLLARS AND _____ CENTS		

41

BID FORM
STEWART ROAD PAVING AND DRAINAGE IMPROVEMENT PROJECT
FROM 7 1/2 MILE ROAD TO COVE VIEW, GALVESTON, TEXAS

19	432	RIPRAP (MOW STRIP)(4 IN)	CY	21	ACTUAL	DOLLARS AND _____ CENTS		
20	432	RIRPAP (CONC)(CL B)(4")	CY	49	ACTUAL	DOLLARS AND _____ CENTS		
21	464	RC PIPE (CL III)(18 IN)	LF	787	ACTUAL	DOLLARS AND _____ CENTS		
22	464	RC PIPE (CL III)(24 IN)	LF	262	ACTUAL	DOLLARS AND _____ CENTS		
23	464	RC PIPE (CL IV)(24 IN)	LF	114	ACTUAL	DOLLARS AND _____ CENTS		
24	464	RC PIPE (CL IV)(36 IN)	LF	136	ACTUAL	DOLLARS AND _____ CENTS		
25	465	INLET (COMPL)(TY H)	EA	3	ACTUAL	DOLLARS AND _____ CENTS		
26	467	SET(TY II)(24 IN)(RCP)(3 1)(C)	EA	8	ACTUAL	DOLLARS AND _____ CENTS		
27	467	SET(TY II)(36 IN)(RCP)(3 1)(C)	EA	4	ACTUAL	DOLLARS AND _____ CENTS		
28	474	SLOT DRAIN (GAL STL)(12 IN)	LF	100	ACTUAL	DOLLARS AND _____ CENTS		
29	474	SLOT DRAIN OUTFALL (GAL STL)(12 IN)	LF	7	ACTUAL	DOLLARS AND _____ CENTS		
30	479	ADJ MANHS (SANITARY)	EA	7	ACTUAL	DOLLARS AND _____ CENTS		
31	496	REMOV STR (INLET)	EA	3	ACTUAL	DOLLARS AND _____ CENTS		
32	496	REMOV STR (SET)	EA	2	ACTUAL	DOLLARS AND _____ CENTS		
33	496	REMOV STR (PIPE)	LF	925	ACTUAL	DOLLARS AND _____ CENTS		
34	496	REMOV STR (SMALL FENCE)	LF	1145	ACTUAL	DOLLARS AND _____ CENTS		
35	496	REMOV STR (WOOD STR)	EA	1	ACTUAL	DOLLARS AND _____ CENTS		
36	500	MOBILIZATION (MAX 5%)	LS	1	ACTUAL	DOLLARS AND _____ CENTS		
37	502	BARRICADES, SIGNS AND TRAFFIC HANDLING	MO	8	ACTUAL	DOLLARS AND _____ CENTS		
38	506	ROCK FILTER DAMS (INSTALL) (TY 2)	LF	90	ACTUAL	DOLLARS AND _____ CENTS		

42

BID FORM
STEWART ROAD PAVING AND DRAINAGE IMPROVEMENT PROJECT
FROM 7 1/2 MILE ROAD TO COVE VIEW, GALVESTON, TEXAS

39	506	ROCK FILTER DAMS (REMOVE)	LF	90	ACTUAL	DOLLARS AND _____ CENTS		
40	506	CONSTRUCTION EXITS (INSTALL) (TY 1)	SY	156	ACTUAL	DOLLARS AND _____ CENTS		
41	506	CONSTRUCTION EXITS (REMOVE)	SY	156	ACTUAL	DOLLARS AND _____ CENTS		
42	506	TEMPORARY SEDIMENT CONTROL FENCE	LF	2695	ACTUAL	DOLLARS AND _____ CENTS		
43	506	TEMPORARY SEDIMENT CONTROL FENCE (REMOVE)	LF	2695	ACTUAL	DOLLARS AND _____ CENTS		
44	508	CONSTRUCTING DETOURS	SY	5325	ACTUAL	DOLLARS AND _____ CENTS		
45	510	ONE WAY TRAFFIC CONTROL	HR	120	ACTUAL	DOLLARS AND _____ CENTS		
46	540	MTL W-BEAM GD FEN (TIM POST)	LF	356 25	ACTUAL	DOLLARS AND _____ CENTS		
47	544	GUARDRAIL END TREATMENT (INSTALL)	EA	2	ACTUAL	DOLLARS AND _____ CENTS		
48	552	WIRE FENCE (TY D)	LF	1145	ACTUAL	DOLLARS AND _____ CENTS		
49	560	MAILBOX INSTALL-S (TWG-POST) TY 2 FND	EA	12	ACTUAL	DOLLARS AND _____ CENTS		
50	560	MAILBOX INSTALL-M (TWG-POST) TY 2 FND	EA	2	ACTUAL	DOLLARS AND _____ CENTS		
51	644	IN SM RD SN SUP&AM TY10BWG (1) SA (P)	EA	40	ACTUAL	DOLLARS AND _____ CENTS		
52	644	IN SM RD SN SUP&AM TYTWT(1) WS (P)	EA	32	ACTUAL	DOLLARS AND _____ CENTS		
53	644	REMOVE SM RD SN SUP & AM	EA	17	ACTUAL	DOLLARS AND _____ CENTS		
54	658	INSTL DEL ASSM (D-DW) SZ 1 (FLX) GND	EA	12	ACTUAL	DOLLARS AND _____ CENTS		
55	658	INSTL OM ASSM (OM-2Z) (FLX) GND	EA	8	ACTUAL	DOLLARS AND _____ CENTS		
56	662	WK ZN PAV MRK REMOV (W) 4" (SLD)	LF	16823	PLANS	DOLLARS AND _____ CENTS		
57	662	WK ZN PAV MRK REMOV (Y) 4 (SLD)	LF	21828	PLANS	DOLLARS AND _____ CENTS		
58	666	REFL PAV MRK TY I (W) 4" (DOT) (100 MIL)	LF	128	PLANS	DOLLARS AND _____ CENTS		

43

BID FORM
STEWART ROAD PAVING AND DRAINAGE IMPROVEMENT PROJECT
FROM 7 1/2 MILE ROAD TO COVE VIEW, GALVESTON, TEXAS

59	666	REFL PAV MRK TY I (W) 4" (SLD) (100 MIL)	LF	10248	PLANS	DOLLARS AND _____ CENTS		
60	666	REFL PAV MRK TY I (W) 24" (SLD) (100 MIL)	LF	531	PLANS	DOLLARS AND _____ CENTS		
61	666	REFL PAV MRK TY I (W) (ARROW) (100 MIL)	EA	19	PLANS	DOLLARS AND _____ CENTS		
62	666	REFL PAV MRK TY I (W) (BIK ARW) (100 MIL)	EA	11	PLANS	DOLLARS AND _____ CENTS		
63	666	REFL PAV MRK TY I (W) (BIKE SYML) (100 MIL)	EA	12	PLANS	DOLLARS AND _____ CENTS		
64	666	REFL PAV MRK TY I (W) (WORD) (100 MIL)	EA	5	PLANS	DOLLARS AND _____ CENTS		
65	666	REFL PAV MRK TY I (Y) 4" (BRK) (100 MIL)	LF	4228	PLANS	DOLLARS AND _____ CENTS		
66	666	REFL PAV MRK TY I (Y) 4" (SLD) (100 MIL)	LF	10729	PLANS	DOLLARS AND _____ CENTS		
67	666	REFL PAV MRK TY I (Y) 24" (SLD) (100 MIL)	LF	208	PLANS	DOLLARS AND _____ CENTS		
68	672	REFL PAV MRKR TY II A A	EA	318	PLANS	DOLLARS AND _____ CENTS		
69	404, 407, 420, 427, 441 446, 740	RETAINING WALL	LF	555	ACTUAL	DOLLARS AND _____ CENTS		
TOTAL BID								

NOTE: All items of work required under this contract not specifically called for in the proposal as pay items shall be considered incidental to the various bid items and no separate payment shall be made for same

44

BID FORM - ALTERNATE WATERLINE BID
STEWART ROAD PAVING AND DRAINAGE IMPROVEMENT PROJECT
FROM 7 1/2 MILE ROAD TO COVE VIEW, GALVESTON, TEXAS

ITEM NO	SPEC NO	DESCRIPTION	UNIT	QNTY	MEASUREMENT	UNIT PRICE IN WORDS	UNIT PRICE	TOTAL PRICE
1	02664	Furnish and Install 8" PVC (AWWA C900) Class 150, DR 18 Waterline by Open Cut including Fittings, Thrust Blocking, Restrained Joints, and Appurtenances, Complete-in-Place, in Accordance with the Plans and Specifications	LF	260	ACTUAL	DOLLARS AND _____ CENTS		
2	02664	Furnish and Install 16" PVC (AWWA C905) Class 235 DR 18 Waterline by Open Cut including Fittings, Thrust Blocking, Restrained Joints, and Appurtenances, Complete-in-Place, in Accordance with the Plans and Specifications	LF	40	ACTUAL	DOLLARS AND _____ CENTS		
3	02664	Furnish and Install 20" HDPE (AWWA C906) Waterline by Open Cut including Fittings, Thrust Blocking, Adapters, and Appurtenances, Complete-in-Place, in Accordance with the Plans and Specifications	LF	4921	ACTUAL	DOLLARS AND _____ CENTS		
4	02664	Trenchless Construction 20" HDPE (AWWA C906) Waterline including Access Pits and Appurtenances, Complete-in-Place in Accordance with the Plans and Specifications	LF	115	ACTUAL	DOLLARS AND _____ CENTS		
5	02664	Trenchless Construction 8" PVC (AWWA C900) Class 150, DR 18 Waterline including Access Pits, Restrained Joints and Appurtenances, Complete-in Place, in Accordance with the Plans and Specifications	LF	85	ACTUAL	DOLLARS AND _____ CENTS		
6	01526	Trench Safety System Waterline Construction (All Depths), Complete-in-Place, in Accordance with the Plans and Specifications	LF	5221	ACTUAL	DOLLARS AND _____ CENTS		
7	02641	Furnish and Install 20" Butterfly Valve with Box, AWWA C504, NRS, Complete-in Place, in Accordance with the Plans and Specifications	EA	5	ACTUAL	DOLLARS AND _____ CENTS		
8	02645	Furnish and Install Fire Hydrant Assembly, including Fire Hydrant, 6" Gate Valve with Box, ALL DEPTHS, Complete-in-Place in Accordance with the Plans and Specifications	EA	11	ACTUAL	DOLLARS AND _____ CENTS		
9	02645	Furnish and Install Fire Hydrant Branch, ALL DEPTHS, Complete-in-Place, in Accordance with the Plans and Specifications	LF	70	ACTUAL	DOLLARS AND _____ CENTS		
10	02645	Remove and Salvage Existing Fire Hydrant, Complete-in-Place, in Accordance with the Plans and Specifications	EA	1	ACTUAL	DOLLARS AND _____ CENTS		
11	02667	Furnish and Install 8" Wet Connection Complete-in-Place, in Accordance with the Plans and Specifications	EA	3	ACTUAL	DOLLARS AND _____ CENTS		
12	02667	Furnish and Install 16" Wet Connection, Complete-in-Place in Accordance with the Plans and Specifications	EA	1	ACTUAL	DOLLARS AND _____ CENTS		

13	02667	Furnish and Install 20" Wet Connection, Complete-in-Place, In Accordance with the Plans and Specifications	EA	2	ACTUAL	DOLLARS AND _____ CENTS		
14	02669	Cut, Plug, and Abandon Existing 8" Water Main, Complete-in-Place In Accordance with the Plans and Specifications	EA	3	ACTUAL	DOLLARS AND _____ CENTS		
15	02669	Cut, Plug, and Abandon Existing 16" Water Main, Complete-in-Place, In Accordance with the Plans and Specifications	EA	1	ACTUAL	DOLLARS AND _____ CENTS		
16	02669	Cut, Plug, and Abandon Existing 20" Water Main, Complete-in-Place, In Accordance with the Plans and Specifications	EA	6	ACTUAL	DOLLARS AND _____ CENTS		
17	01563	Furnish and Install Well Pointing, Complete-in-Place, In Accordance with the Plans and Specifications	LF	5221	ACTUAL	DOLLARS AND _____ CENTS (Min Bid Price $20/CY)		
18	02665	Furnish and Install 3/4" 1" Single Short Service Replacement Including Reconnect To Meter, Complete-in-Place, In Accordance with the Plans and Specifications	EA	2	ACTUAL	DOLLARS AND _____ CENTS		
19	02665	Furnish and Install 3/4" 1" Single Long Service Replacement Including Reconnect To Meter, Complete-in-Place In Accordance with the Plans and Specifications	EA	8	ACTUAL	DOLLARS AND _____ CENTS		
20	02665	Furnish and Install 1 1/2" 2" Single Short Service Replacement Including Reconnect To Meter Complete-in-Place, In Accordance with the Plans and Specifications	EA	1	ACTUAL	DOLLARS AND _____ CENTS		
21	02665	Furnish and Install 1 1/2" 2" Single Long Service Replacement Including Reconnect To Meter Complete-in-Place, In Accordance with the Plans and Specifications	EA	1	ACTUAL	DOLLARS AND _____ CENTS		
22	02228	Extra Special Excavation as directed by Owner's Representative, In Accordance with the Specifications	CY	100	ACTUAL	DOLLARS AND _____ CENTS (Min Bid Price $10/CY)		
23	02228	Extra Hand Excavation as Directed by Owner s Representative, In Accordance with the Specifications	CY	100	ACTUAL	DOLLARS AND _____ CENTS (Min Bid Price $10/CY)		
24	02228	Extra Machine Excavation as directed by Owner's Representative, In Accordance with the Specifications	CY	100	ACTUAL	DOLLARS AND _____ CENTS (Min. Bid Price $5/CY)		
25	02228	Extra Placement of Special Backfill as directed by Owner's Representative In Accordance with the Specifications	CY	150	ACTUAL	DOLLARS AND _____ CENTS (Min Bid Price $15/CY)		

46

26	02228	Extra Replacement of Material as directed by Owner's Representative, In Accordance with the Specifications	CY	150	ACTUAL	_____ DOLLARS AND _____ CENTS (Min Bid Price $10/CY)		
27	02669	Grout Fill Abandoned 8" Waterline	LF	115	ACTUAL	_____ DOLLARS AND _____ CENTS		
28	02669	Grout Fill Abandoned 16" Waterline	LF	2085	ACTUAL	_____ DOLLARS AND _____ CENTS		
29	02669	Grout Fill Abandoned 20" Waterline	LF	2925	ACTUAL	_____ DOLLARS AND _____ CENTS		
TOTAL ALTERNATE WATER LINE BID								

NOTE: All items of work required under this contract not specifically called for in the proposal as pay items shall be considered incidental to the various bid items and no separate payment shall be made for same

47

Binkley & Barfield, Inc
consulting engineers
Texas Registration Number F-257

Date Issued. July 5, 2012

Bid Addendum 3
Bid No. B121027

Stewart Road Paving and Drainage Improvements Project
from 7 ½ Mile Road to Cove View
Galveston County, TX

To All Prospective Bidders,

Please incorporate the following revisions and/or clarifications into the bid.

1. Specifications and Contract Documents – Section V Specifications. Special Provision to Item 9 Measurement and Payment is revised as follows.

   ARTICLE 9 2 "PLANS QUANTITY MEASUREMENT" is hereby revised to read as follows Plans quantities may or may not represent the exact quantity of work performed or material moved, handled, or placed during the execution of the Contract The estimated bid quantities are designated as final payment quantities

2. Bid Form – Line item 17 (400 – Cem Stabil Bkfl)· Revised Quantity

3. The attached detail provides limits for the cement stabilized backfill

All other terms and conditions remain unchanged

End of Addendum

Direct all questions to·

Rufus Crowder
Purchasing Agent
Galveston County

This Addendum must be *Signed & Returned* with your bid.

Authorized Signature of Bidder Company Name

Approved

Jason Kaspar, P.E.
Project Manager
Binkley & Barfield, Inc.

STATE OF TEXAS
JASON C. KASPAR
108672
LICENSED
PROFESSIONAL ENGINEER

Binkley & Barfield, Inc 1710 Seamist Drive, Houston, TX 77008 713 869 3433 FAX. 713.869 6702

BID FORM
STEWART ROAD PAVING AND DRAINAGE IMPROVEMENT PROJECT
FROM 7 1/2 MILE ROAD TO COVE VIEW, GALVESTON, TEXAS

ITEM NO	SPEC NO	DESCRIPTION	UNIT	QNTY	MEASUREMENT	UNIT PRICE IN WORDS	UNIT PRICE	TOTAL PRICE
1	100	PREPARING ROW	STA	49	ACTUAL	DOLLARS AND _____ CENTS		
2	104	REMOVING CONC (DRIVEWAYS)	SY	134	PLANS	DOLLARS AND _____ CENTS		
3	110	EXCAVATION (ROADWAY)	CY	4683	PLANS	DOLLARS AND _____ CENTS		
4	132	EMBANKMENT (FINAL)(DENS CONT)(TY C)	CY	7700	PLANS	DOLLARS AND _____ CENTS		
5	161	COMPOST MANUF TOPSOIL (BIP) (4")	SY	30420	ACTUAL	DOLLARS AND _____ CENTS		
6	162	BLOCK SODDING	SY	2312	ACTUAL	DOLLARS AND _____ CENTS		
7	164	BROADCAST SEED (PERM)(RURAL)(SANDY)	SY	30217	ACTUAL	DOLLARS AND _____ CENTS		
8	260	LIME TRT (EXIST MATL) (8")	SY	27326	ACTUAL	DOLLARS AND _____ CENTS		
9	260	LIME (HYD, COM OR QK) (SLURRY)	TON	273 3	ACTUAL	DOLLARS AND _____ CENTS		
10	265	FLY ASH (CLASS CS)	TON	628 5	ACTUAL	DOLLARS AND _____ CENTS		
11	292	ASPHALT STAB BASE (GR 2) (PG 64)	TON	42 9	ACTUAL	DOLLARS AND _____ CENTS		
12	305	SALV HAUL & STKPL RCL APH PV (VAR DEPTH)	SY	14789	ACTUAL	DOLLARS AND _____ CENTS		
13	341	D-GR HMA (QCQA) TY D PG 70-22	TON	14 3	ACTUAL	DOLLARS AND _____ CENTS		
14	360	CONC PVMT (CONT REINF CRCP)(8")	SY	25151	ACTUAL	DOLLARS AND _____ CENTS		
15	360	CONC PVMT (CONT REINF CRCP)(6")	SY	1286	ACTUAL	DOLLARS AND _____ CENTS		
16	360	CONC PVMT (CONT REINF-CRCP)(7")	SY	841	ACTUAL	DOLLARS AND _____ CENTS		
17	400	CEM STABIL BKFL	CY	613	PLANS	DOLLARS AND _____ CENTS		
18	432	RIPRAP (STONE)(COMMON)(DRY)(12 IN)	CY	7	ACTUAL	DOLLARS AND _____ CENTS		

49

BID FORM
STEWART ROAD PAVING AND DRAINAGE IMPROVEMENT PROJECT
FROM 7 1/2 MILE ROAD TO COVE VIEW, GALVESTON, TEXAS

19	432	RIPRAP (MOW STRIP)(4 IN)	CY	21	ACTUAL	DOLLARS AND _____ CENTS		
20	432	RIRPAP (CONC)(CL B)(4")	CY	49	ACTUAL	DOLLARS AND _____ CENTS		
21	464	RC PIPE (CL III)(18 IN)	LF	787	ACTUAL	DOLLARS AND _____ CENTS		
22	464	RC PIPE (CL III)(24 IN)	LF	262	ACTUAL	DOLLARS AND _____ CENTS		
23	464	RC PIPE (CL IV)(24 IN)	LF	114	ACTUAL	DOLLARS AND _____ CENTS		
24	464	RC PIPE (CL IV)(36 IN)	LF	136	ACTUAL	DOLLARS AND _____ CENTS		
25	465	INLET (COMPL)(TY H)	EA	3	ACTUAL	DOLLARS AND _____ CENTS		
26	467	SET(TY II)(24 IN)(RCP)(3 1)(C)	EA	8	ACTUAL	DOLLARS AND _____ CENTS		
27	467	SET(TY II)(36 IN)(RCP)(3 1)(C)	EA	4	ACTUAL	DOLLARS AND _____ CENTS		
28	474	SLOT DRAIN (GAL STL)(12 IN)	LF	100	ACTUAL	DOLLARS AND _____ CENTS		
29	474	SLOT DRAIN OUTFALL (GAL STL)(12 IN)	LF	7	ACTUAL	DOLLARS AND _____ CENTS		
30	479	ADJ MANHS (SANITARY)	EA	7	ACTUAL	DOLLARS AND _____ CENTS		
31	496	REMOV STR (INLET)	EA	3	ACTUAL	DOLLARS AND _____ CENTS		
32	496	REMOV STR (SET)	EA	2	ACTUAL	DOLLARS AND _____ CENTS		
33	496	REMOV STR (PIPE)	LF	925	ACTUAL	DOLLARS AND _____ CENTS		
34	496	REMOV STR (SMALL FENCE)	LF	1145	ACTUAL	DOLLARS AND _____ CENTS		
35	496	REMOV STR (WOOD STR)	EA	1	ACTUAL	DOLLARS AND _____ CENTS		
36	500	MOBILIZATION (MAX 5%)	LS	1	ACTUAL	DOLLARS AND _____ CENTS		
37	502	BARRICADES, SIGNS AND TRAFFIC HANDLING	MO	8	ACTUAL	DOLLARS AND _____ CENTS		
38	506	ROCK FILTER DAMS (INSTALL) (TY 2)	LF	90	ACTUAL	DOLLARS AND _____ CENTS		

50

BID FORM
STEWART ROAD PAVING AND DRAINAGE IMPROVEMENT PROJECT
FROM 7 1/2 MILE ROAD TO COVE VIEW, GALVESTON, TEXAS

39	506	ROCK FILTER DAMS (REMOVE)	LF	90	ACTUAL	DOLLARS AND _____ CENTS		
40	506	CONSTRUCTION EXITS (INSTALL) (TY 1)	SY	156	ACTUAL	DOLLARS AND _____ CENTS		
41	506	CONSTRUCTION EXITS (REMOVE)	SY	156	ACTUAL	DOLLARS AND _____ CENTS		
42	506	TEMPORARY SEDIMENT CONTROL FENCE	LF	2695	ACTUAL	DOLLARS AND _____ CENTS		
43	506	TEMPORARY SEDIMENT CONTROL FENCE (REMOVE)	LF	2695	ACTUAL	DOLLARS AND _____ CENTS		
44	508	CONSTRUCTING DETOURS	SY	5325	ACTUAL	DOLLARS AND _____ CENTS		
45	510	ONE-WAY TRAFFIC CONTROL	HR	120	ACTUAL	DOLLARS AND _____ CENTS		
46	540	MTL W-BEAM GD FEN (TIM POST)	LF	356.25	ACTUAL	DOLLARS AND _____ CENTS		
47	544	GUARDRAIL END TREATMENT (INSTALL)	EA	2	ACTUAL	DOLLARS AND _____ CENTS		
48	552	WIRE FENCE (TY D)	LF	1145	ACTUAL	DOLLARS AND _____ CENTS		
49	560	MAILBOX INSTALL-S (TWG POST) TY 2 FND	EA	12	ACTUAL	DOLLARS AND _____ CENTS		
50	560	MAILBOX INSTALL-M (TWG-POST) TY 2 FND	EA	2	ACTUAL	DOLLARS AND _____ CENTS		
51	644	IN SM RD SN SUP&AM TY10BWG (1) SA (P)	EA	40	ACTUAL	DOLLARS AND _____ CENTS		
52	644	IN SM RD SN SUP&AM TYTWT(1) WS (P)	EA	32	ACTUAL	DOLLARS AND _____ CENTS		
53	644	REMOVE SM RD SN SUP & AM	EA	17	ACTUAL	DOLLARS AND _____ CENTS		
54	658	INSTL DEL ASSM (D-DW) SZ 1 (FLX) GND	EA	12	ACTUAL	DOLLARS AND _____ CENTS		
55	658	INSTL OM ASSM (OM-2Z) (FLX) GND	EA	8	ACTUAL	DOLLARS AND _____ CENTS		
56	662	WK ZN PAV MRK REMOV (W) 4" (SLD)	LF	16823	PLANS	DOLLARS AND _____ CENTS		
57	662	WK ZN PAV MRK REMOV (Y) 4" (SLD)	LF	21828	PLANS	DOLLARS AND _____ CENTS		
58	666	REFL PAV MRK TY I (W) 4" (DOT) (100 MIL)	LF	128	PLANS	DOLLARS AND _____ CENTS		

51

BID FORM
STEWART ROAD PAVING AND DRAINAGE IMPROVEMENT PROJECT
FROM 7 1/2 MILE ROAD TO COVE VIEW, GALVESTON, TEXAS

59	666	REFL PAV MRK TY I (W) 4" (SLD) (100 MIL)	LF	10248	PLANS	DOLLARS AND _____ CENTS		
60	666	REFL PAV MRK TY I (W) 24" (SLD) (100 MIL)	LF	531	PLANS	DOLLARS AND _____ CENTS		
61	666	REFL PAV MRK TY I (W) (ARROW) (100 MIL)	EA	19	PLANS	DOLLARS AND _____ CENTS		
62	666	REFL PAV MRK TY I (W) (BIK ARW) (100 MIL)	EA	11	PLANS	DOLLARS AND _____ CENTS		
63	666	REFL PAV MRK TY I (W) (BIKE SYML) (100 MIL)	EA	12	PLANS	DOLLARS AND _____ CENTS		
64	666	REFL PAV MRK TY I (W) (WORD) (100 MIL)	EA	5	PLANS	DOLLARS AND _____ CENTS		
65	666	REFL PAV MRK TY I (Y) 4" (BRK) (100 MIL)	LF	4228	PLANS	DOLLARS AND _____ CENTS		
66	666	REFL PAV MRK TY I (Y) 4" (SLD) (100 MIL)	LF	10729	PLANS	DOLLARS AND _____ CENTS		
67	666	REFL PAV MRK TY I (Y) 24" (SLD) (100 MIL)	LF	208	PLANS	DOLLARS AND _____ CENTS		
68	672	REFL PAV MRKR TY II A A	EA	318	PLANS	DOLLARS AND _____ CENTS		
69	404, 407, 420, 427, 441, 446, 740	RETAINING WALL	LF	555	ACTUAL	DOLLARS AND _____ CENTS		
TOTAL BID								

NOTE. All items of work required under this contract not specifically called for in the proposal as pay items shall be considered incidental to the various bid items and no separate payment shall be made for same

52

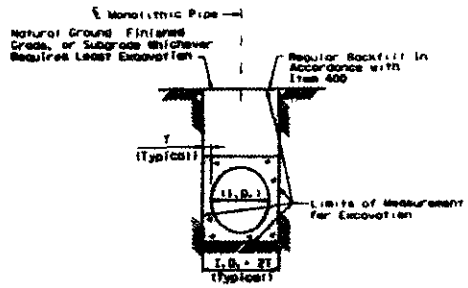

EXCAVATION DETAIL
MONOLITHIC PIPE
IN A PAVED OR GRADED AREA

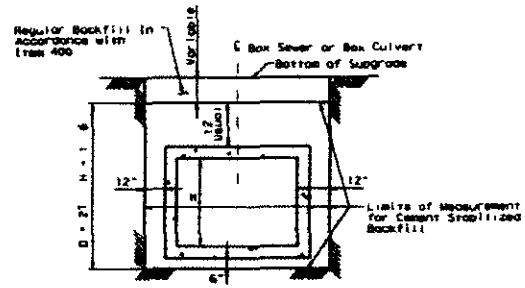

BACKFILL DETAIL
BOX CULVERTS
IN A GRADED OR PAVED AREA
INCLUDING DETOURS *

REINFORCED CONCRETE PIPE			
EXCAVATION AND BACKFILL QUANTITIES			
PIPE DIA. IN.	T FT	CULVERT OR SEWER EXCAVATION IN A PAVED OR GRADED AREA C.Y PER L.F PER FT OF DEPTH	CEMENT STABILIZED BACKFILL IN A PAVED OR GRADED AREA C.Y PER L.F OF PIPE
18	0.19	0.144	0.383
24	0.23	0.165	0.478
30	0.29	0.188	0.586
36	0.33	0.210	0.692
42	0.38	0.231	0.808
48	0.42	0.327	1.394
54	0.46	0.349	1.560
60	0.50	0.370	1.731
66	0.54	0.392	1.907
72	0.58	0.414	2.088
78	0.62	0.435	2.275
84	0.67	0.457	2.474

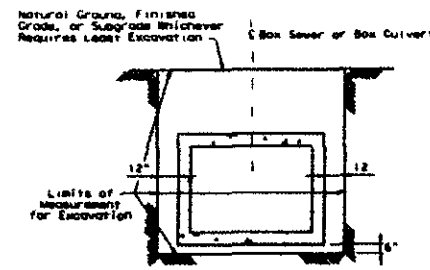

EXCAVATION DETAIL
BOX CULVERTS
IN A GRADED AREA

MONOLITHIC PIPE		
EXCAVATION QUANTITIES		
PIPE DIA. IN	T FT	EXCAVATION C.Y. PER L.F. PER FT OF DEPTH
36	0.417	0.142
42	0.458	0.164
48	0.458	0.182
54	0.500	0.204
60	0.583	0.228
66	0.583	0.247
72	0.625	0.269
78	0.625	0.287
84	0.625	0.306

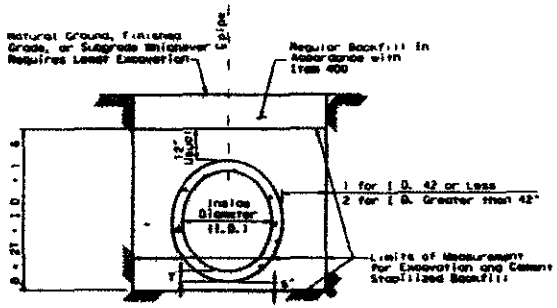

EXCAVATION & BACKFILL DETAIL
REINFORCED CONCRETE PIPE
IN A GRADED OR PAVED AREA
INCLUDING DETOURS

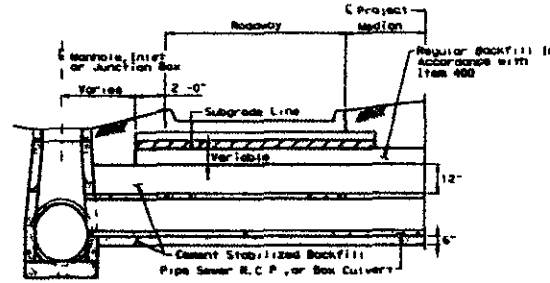

BACKFILL DETAIL
AT MANHOLE, INLET OR JUNCTION BOX

NOTE:

Cement stabilized backfill may be omitted in private driveways as indicated elsewhere in the plans.

Rubber gaskets shall be required for all joints on proposed cross drainage, pipe culverts and proposed storm sewer systems, unless otherwise shown in the plans.

* Backfill with cement stabilized material will be required for all structures under detours unless noted otherwise in the General Notes.

SHEET 1 OF 2

D = Depth
H = Height
T = Thickness
R = Radius
Dia = Diameter

Texas Department of Transportation
Houston District

EXCAVATION AND BACKFILL DIAGRAMS

E&BD

53

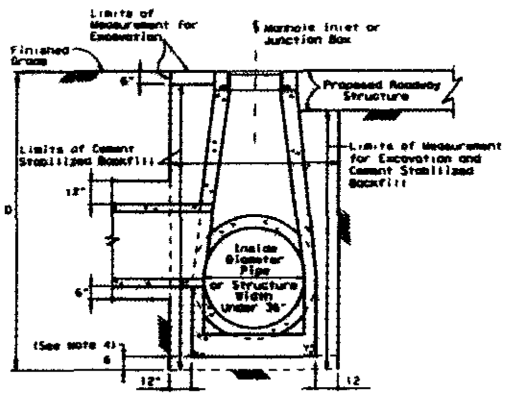

EXCAVATION AND BACKFILL DETAIL
MANHOLES SMALLER THAN 36 IN.
IN A PAVED OR GRADED AREAS
N.T.S.

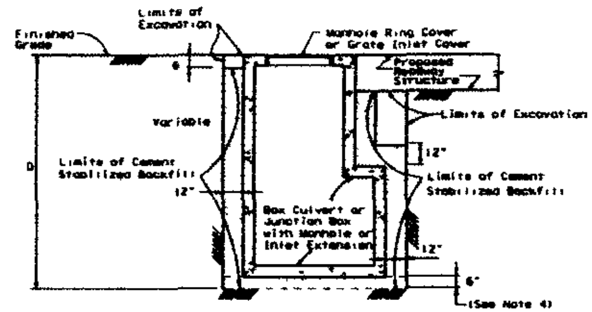

EXCAVATION AND BACKFILL DETAIL
JUNCTION BOXES IN A
PAVED OR GRADED AREA
N.T.S.

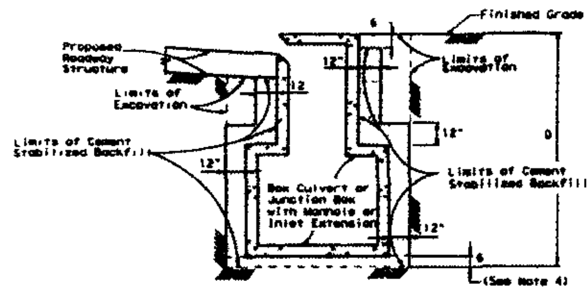

EXCAVATION AND BACKFILL DETAIL
INLET EXTENSIONS ON A BOX CULVERT
IN A PAVED OR GRADED AREA
N.T.S.

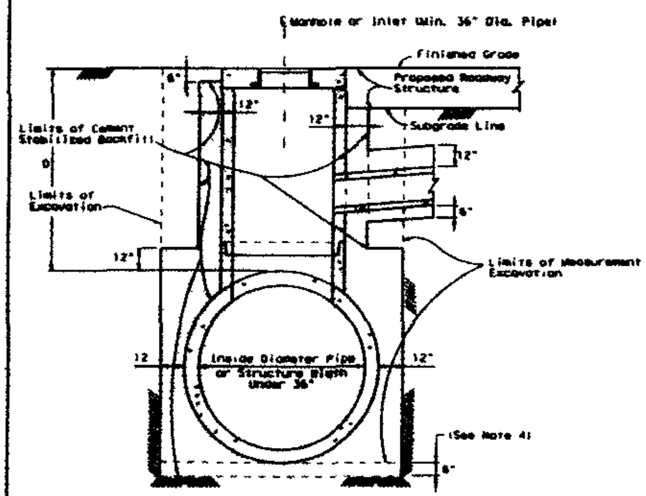

EXCAVATION AND BACKFILL DETAIL
MANHOLES 36 IN. AND GREATER
IN A PAVED OR GRADED AREA
N.T.S.

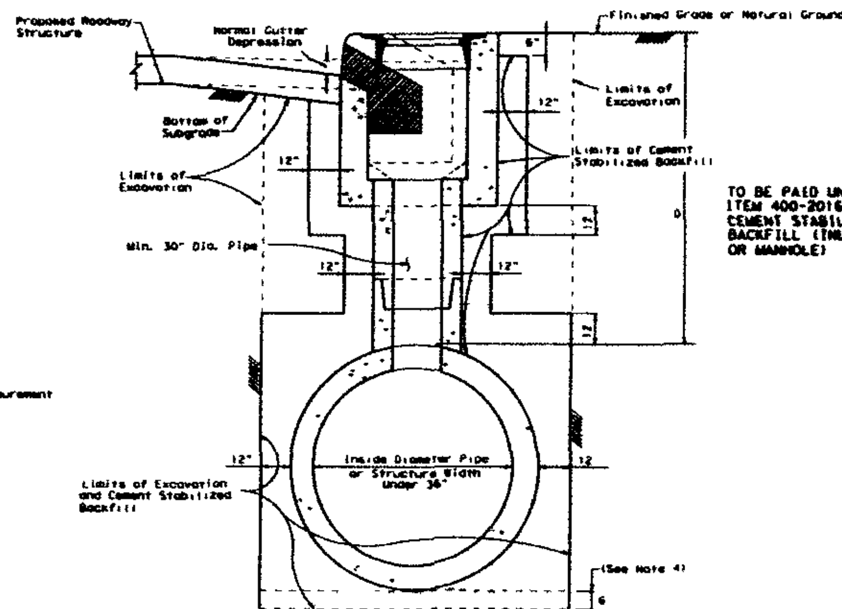

EXCAVATION AND BACKFILL DETAIL
CURB INLETS IN A PAVED OR GRADED AREA
N.T.S.

TABLE 1

SCHEDULE FOR PAY QUANTITIES OF CEMENT STABILIZED BACKFILL (SEE NOTE 1)

MANHOLE OR INLET DEPTH (D) IN FEET	CEMENT STABILIZED BACKFILL IN CUBIC YARDS
0 through 5	5.75
> 5 through 10	8.25
greater than 10	12.75

TO BE PAID UNDER ITEM 400-2016 CEMENT STABILIZED BACKFILL (INLET OR MANHOLE)

NOTES:

1. The Contractor is paid a fixed estimated amount for cement stabilized backfill based on depth (D) and Table 1.
2. Proposed roadway structure includes pavement, base and any subgrade.
3. For backfill of intersecting pipes and box culverts, see "Excavation and Backfill Diagram for Pipes and Box Culverts.
4. 6" cement stabilized backfill will be required only for precast units.

SHEET 2 OF 2

D = Depth
H = Height
T = Thickness
R = Radius
Dia = Diameter

Texas Department of Transportation
Houston District

EXCAVATION AND BACKFILL DIAGRAMS

E&BD

COPY

Proposal - Page 1
BID NUMBER B121027

BID PROPOSAL

The bidder hereby proposes to furnish all labor, material, equipment and incidentals for.

Stewart Road Paving and Drainage Improvements from 7 ½ Mile Rd to Cove View

Enclosed is a Certified Check, Cashier's Check or Bid Bond in the sum of 5% of the greatest amount bid

Bidder agrees to perform in accordance with the requirements of the contract documents in consideration of payment by the County of the prices in this proposal

IN CASE OF DISCREPANCY BETWEEN UNIT PRICES AND EXTENDED PRICES, UNIT PRICES WILL GOVERN.

This bid sheet must be completely filled out in ink or typewritten with any necessary supplemental information attached.

The undersigned hereby agrees to all of the foregoing terms and provisions and to all terms and provisions of the contract, if awarded, which includes all provisions of Sections I - VI of this bid package

Note: All items of work required under this contract not specifically called for in the proposal as pay items shall be considered incidental to the various bid items and no separate payment shall be made for same.

BIDDER RW Lucas Construction, LLC

SIGNATURE

PRINT NAME Ryan Lucas

TITLE President

ADDRESS 551 C League City Parkway

CITY, STATE League City Texas

ZIP 77573

TELEPHONE 281-316-9990

FAX NO 281-316-6087

DATE June 28, 2012

BID FORM
STEWART ROAD PAVING AND DRAINAGE IMPROVEMENT PROJECT
FROM 7 1/2 MILE ROAD TO COVE VIEW, GALVESTON, TEXAS

ITEM NO.	SPEC NO.	DESCRIPTION	UNIT	QNTY	MEASUREMENT	UNIT PRICE IN WORDS	UNIT PRICE	TOTAL PRICE
1	100	PREPARING ROW	STA	49	ACTUAL	One thousand seven hundred eighteen DOLLARS AND thirty two CENTS	1,718 32	84,197 68
2	104	REMOVING CONC (DRIVEWAYS)	SY	134	PLANS	Six DOLLARS AND zero CENTS	6 00	804 00
3	110	EXCAVATION (ROADWAY)	CY	4683	PLANS	Ten DOLLARS AND zero CENTS	10 00	46,830 00
4	132	EMBANKMENT (FINAL)(DENS CONT)(TY C)	CY	7700	PLANS	Sixteen DOLLARS AND zero CENTS	16 00	123,200 00
5	161	COMPOST MANUF TOPSOIL (BIP) (4")	SY	30420	ACTUAL	Two DOLLARS AND twenty CENTS	2 20	66,924 00
6	162	BLOCK SODDING	SY	2312	ACTUAL	Three DOLLARS AND fifty CENTS	3 50	8.092.00
7	164	BROADCAST SEED (PERM)(RURAL)(SANDY)	SY	30217	ACTUAL	Zero DOLLARS AND twenty CENTS	0 20	6.043 40
8	260	LIME TRT (EXIST MATL) (8")	SY	27326	ACTUAL	Two DOLLARS AND sixty CENTS	2 60	71,047 60
9	260	LIME (HYD, COM OR QK) (SLURRY)	TON	273.3	ACTUAL	One hundred sixty five DOLLARS AND zero CENTS	165 00	45,094 50
10	265	FLY ASH (CLASS CS)	TON	628.5	ACTUAL	Eighty DOLLARS AND zero CENTS	80 00	50.280 00
11	292	ASPHALT STAB BASE (GR 2) (PG 64)	TON	42.9	ACTUAL	One hundred fifty DOLLARS AND zero CENTS	150 00	6,435 00
12	305	SALV, HAUL & STKPL RCL APH PV (VAR DEPTH)	SY	14789	ACTUAL	One DOLLARS AND eighty CENTS	1 80	26,620 20
13	341	D-GR HMA (QCQA) TY-D PG 70-22	TON	14.3	ACTUAL	One hundred fifty six DOLLARS AND zero CENTS	156.00	2,230.80
14	360	CONC PVMT (CONT REINF-CRCP)(8")	SY	25151	ACTUAL	Thirty seven DOLLARS AND eighty CENTS	37 80	950,707 80
15	360	CONC PVMT (CONT REINF-CRCP)(6")	SY	1286	ACTUAL	Thirty six DOLLARS AND zero CENTS	36 00	46,296 00
16	360	CONC PVMT (CONT REINF-CRCP)(7")	SY	841	ACTUAL	Thirty seven DOLLARS AND zero CENTS	37 00	31,117 00
17	400	CEM STABIL BKFL	CY	613	PLANS	Twenty six DOLLARS AND seventy five CENTS	26 75	16,397 75
18	432	RIPRAP (STONE)(COMMON)(DRY)(12 IN)	CY	7	ACTUAL	One hundred DOLLARS AND zero CENTS	100 00	700 00

BID FORM
STEWART ROAD PAVING AND DRAINAGE IMPROVEMENT PROJECT
FROM 7 1/2 MILE ROAD TO COVE VIEW, GALVESTON, TEXAS

19	432	RIPRAP (MOW STRIP)(4 IN)	CY	21	ACTUAL	Five hundred DOLLARS AND zero CENTS	500 00	10,500 00
20	432	RIRPAP (CONC)(CL B)(4)	CY	49	ACTUAL	Five hundred DOLLARS AND zero CENTS	500 00	24,500 00
21	464	RC PIPE (CL III)(18 IN)	LF	787	ACTUAL	Fifty DOLLARS AND zero CENTS	50 00	39,350 00
22	464	RC PIPE (CL III)(24 IN)	LF	262	ACTUAL	Forty seven DOLLARS AND zero CENTS	47 00	12,314 00
23	464	RC PIPE (CL IV)(24 IN)	LF	114	ACTUAL	Fifty one DOLLARS AND zero CENTS	51 00	5 814 00
24	464	RC PIPE (CL IV)(36 IN)	LF	136	ACTUAL	Eight five DOLLARS AND zero CENTS	85 00	11,560 00
25	465	INLET (COMPL)(TY H)	EA	3	ACTUAL	Two Thou Four Hundred Seventy Five DOLLARS AND zero CENTS	2,475 00	7,425 00
26	467	SET(TY II)(24 IN)(RCP)(3 1)(C)	EA	8	ACTUAL	Six hundred ninety DOLLARS AND zero CENTS	690 00	5,520 00
27	467	SET(TY II)(36 IN)(RCP)(3:1)(C)	EA	4	ACTUAL	Two thousand ten DOLLARS AND zero CENTS	2,010 00	8,040 00
28	474	SLOT DRAIN (GAL STL)(12 IN)	LF	100	ACTUAL	One Hundred Fifty Four DOLLARS AND zero CENTS	154 00	15,400 00
29	474	SLOT DRAIN OUTFALL (GAL STL)(12 IN)	LF	7	ACTUAL	One hundred Fifty Four DOLLARS AND zero CENTS	154 00	1,078 00
30	479	ADJ MANHS (SANITARY)	EA	7	ACTUAL	Two Thousand Six Hundred DOLLARS AND zero CENTS	2,600 00	18,200 00
31	496	REMOV STR (INLET)	EA	3	ACTUAL	One hundred fifty seven DOLLARS AND zero CENTS	157 00	471 00
32	496	REMOV STR (SET)	EA	2	ACTUAL	One hundred five DOLLARS AND zero CENTS	105 00	210 00
33	496	REMOV STR (PIPE)	LF	925	ACTUAL	Ten DOLLARS AND zero CENTS	10 00	9,250 00
34	496	REMOV STR (SMALL FENCE)	LF	1145	ACTUAL	One DOLLARS AND twenty six CENTS	1 26	1 442 70
35	496	REMOV STR (WOOD STR)	EA	1	ACTUAL	One thousand two hundred sixty DOLLARS AND zero CENTS	1,260 00	1,260 00
36	500	MOBILIZATION (MAX 5%)	LS	1	ACTUAL	Eighty four thou one hd ninety seven DOLLARS AND sixty CENTS	84,197 60	84,197 60
37	502	BARRICADES, SIGNS AND TRAFFIC HANDLING	MO	8	ACTUAL	Four thousand DOLLARS AND zero CENTS	4,000 00	32,000 00
38	506	ROCK FILTER DAMS (INSTALL) (TY 2)	LF	90	ACTUAL	Twenty DOLLARS AND zero CENTS	20 00	1,800 00

57

BID FORM
STEWART ROAD PAVING AND DRAINAGE IMPROVEMENT PROJECT
FROM 7 1/2 MILE ROAD TO COVE VIEW, GALVESTON, TEXAS

39	506	ROCK FILTER DAMS (REMOVE)	LF	90	ACTUAL	Five DOLLARS AND zero CENTS	5 00	450 00
40	506	CONSTRUCTION EXITS (INSTALL) (TY 1)	SY	156	ACTUAL	Fifteen DOLLARS AND zero CENTS	15 00	2,340 00
41	506	CONSTRUCTION EXITS (REMOVE)	SY	156	ACTUAL	Five DOLLARS AND zero CENTS	5 00	780 00
42	506	TEMPORARY SEDIMENT CONTROL FENCE	LF	2695	ACTUAL	One DOLLARS AND twenty six CENTS	1 26	3 395 70
43	506	TEMPORARY SEDIMENT CONTROL FENCE (REMOVE)	LF	2695	ACTUAL	Zero DOLLARS AND fifty CENTS	0 50	1 347 50
44	508	CONSTRUCTING DETOURS	SY	5325	ACTUAL	Thirty six DOLLARS AND zero CENTS	36 00	191,700 00
45	510	ONE-WAY TRAFFIC CONTROL	HR	120	ACTUAL	Fifty DOLLARS AND zero CENTS	50 00	6,000 00
46	540	MTL W-BEAM GD FEN (TIM POST)	LF	356 25	ACTUAL	Twenty six DOLLARS AND zero CENTS	26 00	9,262 50
47	544	GUARDRAIL END TREATMENT (INSTALL)	EA	2	ACTUAL	Two thousand six hundred DOLLARS AND zero CENTS	2,600 00	5,200 00
48	552	WIRE FENCE (TY D)	LF	1145	ACTUAL	Six DOLLARS AND fifty CENTS	6 50	7,442 50
49	560	MAILBOX INSTALL-S (TWG-POST) TY 2 FND	EA	12	ACTUAL	One hundred twenty six DOLLARS AND zero CENTS	126 00	1 512 00
50	560	MAILBOX INSTALL-M (TWG-POST) TY 2 FND	EA	2	ACTUAL	Three hundred twenty six DOLLARS AND zero CENTS	326 00	652 00
51	644	IN SM RD SN SUP&AM TY10BWG (1) SA (P)	EA	40	ACTUAL	Five hundred DOLLARS AND zero CENTS	500 00	20,000 00
52	644	IN SM RD SN SUP&AM TYTWT(1) WS (P)	EA	32	ACTUAL	Two hundred sixty DOLLARS AND zero CENTS	260 00	8,320 00
53	644	REMOVE SM RD SN SUP & AM	EA	17	ACTUAL	Sixty DOLLARS AND zero CENTS	60 00	1,020 00
54	658	INSTL DEL ASSM (D-DW) SZ 1 (FLX) GND	EA	12	ACTUAL	Fifty DOLLARS AND zero CENTS	50 00	600 00
55	658	INSTL OM ASSM (OM 2Z) (FLX) GND	EA	8	ACTUAL	Fifty DOLLARS AND zero CENTS	50 00	400 00
56	662	WK ZN PAV MRK REMOV (W) 4" (SLD)	LF	16823	PLANS	Zero DOLLARS AND thirty six CENTS	0.36	6,056.28
57	662	WK ZN PAV MRK REMOV (Y) 4" (SLD)	LF	21828	PLANS	Zero DOLLARS AND thirty six CENTS	0 36	7,858 08
58	666	REFL PAV MRK TY I (W) 4" (DOT) (100 MIL)	LF	128	PLANS	Zero DOLLARS AND fifty CENTS	0 50	64 00

58

BID FORM
STEWART ROAD PAVING AND DRAINAGE IMPROVEMENT PROJECT
FROM 7 1/2 MILE ROAD TO COVE VIEW, GALVESTON, TEXAS

59	666	REFL PAV MRK TY I (W) 4" (SLD) (100 MIL)	LF	10248	PLANS	Zero DOLLARS AND fifty CENTS	0 50	5,124 00
60	666	REFL PAV MRK TY I (W) 24" (SLD) (100 MIL)	LF	531	PLANS	Six DOLLARS AND zero CENTS	6 00	3,186 00
61	666	REFL PAV MRK TY I (W) (ARROW) (100 MIL)	EA	19	PLANS	One hundred DOLLARS AND zero CENTS	100 00	1,900 00
62	666	REFL PAV MRK TY I (W) (BIK ARW) (100 MIL)	EA	11	PLANS	Sixty DOLLARS AND zero CENTS	60 00	660 00
63	666	REFL PAV MRK TY I (W) (BIKE SYML) (100 MIL)	EA	12	PLANS	Eighty six DOLLARS AND zero CENTS	86 00	1,032 00
64	666	REFL PAV MRK TY I (W) (WORD) (100 MIL)	EA	5	PLANS	One hundred DOLLARS AND zero CENTS	100 00	500 00
65	666	REFL PAV MRK TY I (Y) 4" (BRK) (100 MIL)	LF	4228	PLANS	Zero DOLLARS AND fifty CENTS	0 50	2,114 00
66	666	REFL PAV MRK TY I (Y) 4" (SLD) (100 MIL)	LF	10729	PLANS	Zero DOLLARS AND fifty CENTS	0 50	5,364 50
67	666	REFL PAV MRK TY I (Y) 24" (SLD) (100 MIL)	LF	208	PLANS	Six DOLLARS AND zero CENTS	6 00	1,248.00
68	672	REFL PAV MRKR TY II A-A	EA	318	PLANS	Four DOLLARS AND fifty CENTS	4 50	1,431 00
69	404, 407, 420, 427, 441, 446, 740	RETAINING WALL	LF	555	ACTUAL	Five hundred DOLLARS AND zero CENTS	500 00	277,500 00

TOTAL BID Two million four hundred forty seven thousand eight hundred ten and 09/100 Dollars $2,447,810 09

NOTE: All items of work required under this contract not specifically called for in the proposal as pay items shall be considered incidental to the various bid items and no separate payment shall be made for same

59

BID FORM - ALTERNATE WATERLINE BID
STEWART ROAD PAVING AND DRAINAGE IMPROVEMENT PROJECT
FROM 7 1/2 MILE ROAD TO COVE VIEW, GALVESTON, TEXAS

ITEM NO	SPEC NO.	DESCRIPTION	UNIT	QNTY	MEASUREMENT	UNIT PRICE IN WORDS	UNIT PRICE	TOTAL PRICE
1	02664	Furnish and Install 8" PVC (AWWA C900) Class 150, DR 18 Waterline by Open Cut including Fittings, Thrust Blocking, Restrained Joints, and Appurtenances, Complete-in-Place, In Accordance with the Plans and Specifications	LF	260	ACTUAL	Seventy six DOLLARS AND zero CENTS	76 00	19,760 00
2	02664	Furnish and Install 16" PVC (AWWA C905) Class 235, DR 18 Waterline by Open Cut including Fittings, Thrust Blocking, Restrained Joints, and Appurtenances, Complete-in-Place, In Accordance with the Plans and Specifications	LF	40	ACTUAL	Two hundred sixty five DOLLARS AND zero CENTS	265 00	10,600.00
3	02664	Furnish and Install 20" HDPE (AWWA C906) Waterline by Open Cut including Fittings, Thrust Blocking, Adapters, and Appurtenances, Complete-in-Place, In Accordance with the Plans and Specifications	LF	4921	ACTUAL	One hundred five DOLLARS AND zero CENTS	105 00	516,705 00
4	02664	Trenchless Construction 20" HDPE (AWWA C906) Waterline including Access Pits and Appurtenances, Complete-in-Place, In Accordance with the Plans and Specifications	LF	115	ACTUAL	Three hundred DOLLARS AND zero CENTS	300 00	34,500 00
5	02664	Trenchless Construction 8" PVC (AWWA C900) Class 150, DR 18 Waterline including Access Pits, Restrained Joints and Appurtenances, Complete-in-Place, In Accordance with the Plans and Specifications	LF	85	ACTUAL	Ninety Eight DOLLARS AND zero CENTS	98 00	8,330 00
6	01526	Trench Safety System Waterline Construction (All Depths), Complete-in-Place, In Accordance with the Plans and Specifications	LF	5221	ACTUAL	One DOLLARS AND zero CENTS	1.00	5,221 00
7	02641	Furnish and Install 20" Butterfly Valve with Box, AWWA C504, NRS, Complete-in-Place, In Accordance with the Plans and Specifications	EA	5	ACTUAL	Thirteen thousand two hundred DOLLARS AND zero CENTS	13,200 00	66,000 00
8	02645	Furnish and Install Fire Hydrant Assembly including Fire Hydrant, 6" Gate Valve with Box, ALL DEPTHS, Complete-in-Place, In Accordance with the Plans and Specifications	EA	11	ACTUAL	Four thousand six hundred twenty five DOLLARS AND zero CENTS	4,625 00	50,875 00
9	02645	Furnish and Install Fire Hydrant Branch, ALL DEPTHS, Complete-in-Place, In Accordance with the Plans and Specifications	LF	70	ACTUAL	Twenty five DOLLARS AND zero CENTS	25 00	1,750.00
10	02645	Remove and Salvage Existing Fire Hydrant, Complete-in-Place, In Accordance with the Plans and Specifications	EA	1	ACTUAL	Two hundred twenty five DOLLARS AND zero CENTS	225 00	225 00
11	02667	Furnish and Install 8" Wet Connection, Complete-in-Place, In Accordance with the Plans and Specifications	EA	3	ACTUAL	One thousand DOLLARS AND zero CENTS	1,000 00	3,000 00
12	02667	Furnish and Install 16" Wet Connection, Complete-in-Place, In Accordance with the Plans and Specifications	EA	1	ACTUAL	One Thousand seven hundred DOLLARS AND zero CENTS	1,700 00	1,700 00

13	02667	Furnish and Install 20" Wet Connection, Complete-in-Place, In Accordance with the Plans and Specifications	EA	2	ACTUAL	Three Thousand Two Hundred DOLLARS AND zero CENTS	3,200 00	6,400 00
14	02669	Cut, Plug, and Abandon Existing 8" Water Main, Complete-in-Place, In Accordance with the Plans and Specifications	EA	3	ACTUAL	Five Hundred DOLLARS AND zero CENTS	500 00	1,500 00
15	02669	Cut, Plug, and Abandon Existing 16" Water Main, Complete-in-Place, In Accordance with the Plans and Specifications	EA	1	ACTUAL	One thousand two hundred DOLLARS AND zero CENTS	1,200 00	1,200 00
16	02669	Cut, Plug, and Abandon Existing 20" Water Main, Complete-in-Place, In Accordance with the Plans and Specifications	EA	6	ACTUAL	One thousand nine hundred thirty five DOLLARS AND zero CENTS	1,935 00	11,610 00
17	01563	Furnish and Install Well Pointing, Complete-in-Place, In Accordance with the Plans and Specifications	LF	5221	ACTUAL	Twenty two DOLLARS AND zero CENTS (Min Bid Price $20/CY)	22 00	114,862 00
18	02665	Furnish and Install 3/4" - 1" Single Short Service Replacement Including Reconnect To Meter, Complete-in-Place, In Accordance with the Plans and Specifications	EA	2	ACTUAL	Sixteen DOLLARS AND twenty CENTS	16.20	32 40
19	02665	Furnish and Install 3/4" - 1" Single Long Service Replacement Including Reconnect To Meter, Complete-in-Place, In Accordance with the Plans and Specifications	EA	8	ACTUAL	One thousand nine hundred fifty DOLLARS AND zero CENTS	1,950 00	15,600 00
20	02665	Furnish and Install 1 1/2" - 2" Single Short Service Replacement Including Reconnect To Meter, Complete-in-Place, In Accordance with the Plans and Specifications	EA	1	ACTUAL	One thousand nine hundred fifty DOLLARS AND zero CENTS	1,950.00	1,950 00
21	02665	Furnish and Install 1 1/2" - 2" Single Long Service Replacement Including Reconnect To Meter, Complete-in-Place, In Accordance with the Plans and Specifications	EA	1	ACTUAL	Two Thousand Three hundred fifty DOLLARS AND zero CENTS	2,350 00	2,350 00
22	02228	Extra Special Excavation as directed by Owner's Representative, In Accordance with the Specifications	CY	100	ACTUAL	Twelve DOLLARS AND zero CENTS (Min Bid Price $10/CY)	12 00	1,200 00
23	02228	Extra Hand Excavation as Directed by Owner's Representative, In Accordance with the Specifications	CY	100	ACTUAL	Thirty DOLLARS AND zero CENTS (Min Bid Price $10/CY)	30 00	3,000 00
24	02228	Extra Machine Excavation as directed by Owner's Representative, In Accordance with the Specifications	CY	100	ACTUAL	Six DOLLARS AND zero CENTS (Min. Bid Price $5/CY)	6 00	600 00
25	02228	Extra Placement of Special Backfill as directed by Owner's Representative, In Accordance with the Specifications	CY	150	ACTUAL	Twelve DOLLARS AND zero CENTS (Min Bid Price $15/CY)	12 00	1,800 00

61

26	02228	Extra Replacement of Material as directed by Owner s Representative, In Accordance with the Specifications	CY	150	ACTUAL	Ten DOLLARS AND zero CENTS (Min Bid Price $10/CY)	10 00	1,500 00
27	02669	Grout Fill Abandoned 8" Waterline	LF	115	ACTUAL	Nine DOLLARS AND zero CENTS	9 00	1,035 00
28	02669	Grout Fill Abandoned 16" Waterline	LF	2085	ACTUAL	Ten DOLLARS AND zero CENTS	10 00	20,850 00
29	02669	Grout Fill Abandoned 20" Waterline	LF	2925	ACTUAL	Sixteen DOLLARS AND fifty CENTS	16 50	48,262 50
TOTAL ALTERNATE WATER LINE BID Nine hundred fifty two thousand four hundred seventeen dollars and 90/100							$952,417 90	

NOTE: All items of work required under this contract not specifically called for in the proposal as pay items shall be considered incidental to the various bid items and no separate payment shall be made for same

62

BID FORM - ALTERNATIVE BID
STEWART ROAD PAVING AND DRAINAGE IMPROVEMENT PROJECT
FROM 7 1/2 MILE ROAD TO COVE VIEW, GALVESTON, TEXAS

ITEM NO	SPEC NO.	DESCRIPTION	UNIT	QNTY	MEASUREMENT	UNIT PRICE IN WORDS	UNIT PRICE	TOTAL PRICE
1	467	SET(TY II)(18 IN)(RCP)(6.1)(P)	EA	32	ACTUAL	Four hundred DOLLARS AND zero CENTS	400.00	12,800 00
2	467	SET(TY II)(24 IN)(RCP)(6 1)(P)	EA	8	ACTUAL	Five hundred eighty DOLLARS AND zero CENTS	580 00	4,640 00
TOTAL ALTERNATIVE BID Seventeen thousand four hundred forty dollars								$17,440 00

NOTE. All items of work required under this contract not specifically called for in the proposal as pay items shall be considered incidental to the various bid items and no separate payment shall be made for same

SECTION III

Special Terms and Conditions

SPECIAL TERMS AND CONDITIONS

CONTRACT FOR: Stewart Road Paving and Drainage Improvements from 7 ½ Mile Road to Cove View

In the event of a conflict between any provision of these Special Terms and Conditions and any other section or provision of this bid package or a contract awarded under this bid, the Special Terms and Provisions control. If you need additional information, contact the Project Administrator

Qualified bids or exceptions to the bids are not allowed

SCOPE:

It is the intent of these specifications to secure a contract to furnish labor, equipment, materials and incidentals as required to

1 Reconstruct Stewart Road between 7 ½ Mile Road to Cove View Boulevard to consist of a 2-lane concrete road with open ditches, continuous two-way left turn lane and 5' bike lanes on both sides of the roadway

The work to be performed will be administered by the County's Program Administrator, who, for purposes of this Contract is

Name G. Michael Fitzgerald, P E , County Engineer
Address 722 Moody Avenue, Galveston, Texas 77550
Telephone No. (409) 770-5554

GENERAL

The Contractor will be required to make submittals on all materials for pre-delivery approval.

All advance warning signs to be set two weeks prior to the start of construction activities and to remain in place until all construction activities are complete and accepted by Galveston County

For this project the contractor will furnish and maintain all barricades and warning signs, including all temporary and portable traffic control devices necessary during the various phases of construction These barricades and warning signs shall be constructed and placed in accordance with the barricades and construction standards, latest Texas MUTCD, and typical construction layouts, or as directed by the Engineer

The Contractor shall be responsible for controlling excess dust and loose rocks

produced by the work The Contractor shall use methods which are reasonable and practical to control these problems

The Contractor shall maintain the roadway to a smooth, all weather condition throughout the duration of the project at no additional pay

MATERIAL STORAGE

Mixing of materials, storing of materials, storing of equipment, or repairing of equipment on top of pavement or bridge decks will not be permitted unless specifically authorized by the ENGINEER Permission will be granted to store materials on subject surfaces if no damage or discoloration will result

MATERIAL HAULING

Hauling of materials will not be paid for directly, but shall be considered as subsidiary work pertaining to the respective bid items. Haul routes for full and empty loads shall be restricted to State Highways Hauling of equipment is also restricted to State Highways

VERTICAL AND HORIZONTAL CONTROL

Vertical and horizontal control points will be provided by Galveston County All construction surveying and staking will be done by the contractor

MATERIALS TESTING

Galveston County will pay for and conduct materials testing for the County's benefit and use in determining whether to accept or reject the materials or finished products Contractor is responsible for assuring all materials and finished products comply with the Drawings and Specifications Test results from the County's testing will be made available to Contractor

SUSPENSION OF WORK

In case of suspension of work for any cause, the contractor shall be responsible for the preservation of all materials He shall provide suitable drainage of the roadway and shall erect temporary structures where required The contractor shall maintain the roadway in good and passable condition until final acceptance

ABATEMENT AND MITIGATION OF EXCESSIVE OR UNNECESSARY CONSTRUCTION NOISE

Throughout all phases of the construction of this project, including the moving, unloading, operating and handling of construction equipment prior to commencement of work, during the project and after the work is complete, the contractor shall make every

reasonable effort to minimize the noise imposed upon the immediate neighborhood surrounding the area of construction Particular and special efforts shall be exercised by the Contractor to avoid the creation of unnecessary noise impacts on adjacent sensitive receptors in the placement of non-mobile equipment such as air compressors, generators, pumps, etc The placement of temporary parked mobile equipment with the engine running shall be such as to cause the least disruption of normal adjacent activities not associated with the work to be performed by the contractor

All equipment associated with the work shall be equipped with components designed by the manufacturer wholly or in part to suppress excessive noise and these components shall be maintained in their original operating condition considering normal depreciation Noise-attenuation devices installed by the manufacturer such as mufflers, engine covers, insulation, etc , shall not be removed nor rendered ineffectual nor be permitted to remain off the equipment while the equipment is in use

WORKING HOURS

Contractor is only permitted to perform work during the hours of 8AM to 5PM, Monday thru Friday

LIQUIDATED DAMAGES

Liquidated damages in the amount of One Thousand Five Hundred dollars ($1500 00) per day will be assessed for each day beyond the time of completion that the work is not substantially complete

TIME OF COMPLETION

Time of Completion of this project is 240 calendar days from the date of the Notice to Proceed

PIPELINE, UTILITY LOCATIONS AND CONTRACTOR RESPONSIBILITY

An effort to determine all pipelines and utilities which may impact the project has been made All known pipelines and utilities have been approximately located and shown on the plans The Contractor shall notify all utility and pipeline owners before beginning the work Additional unknown utilities and pipelines may be found Adjustments of these utilities or pipelines shall be done by others at no expense to the contractor However, the Contractor shall cooperate and coordinate his work with the adjustment

The Contractor will anticipate this in making his bid. The contractor will not be allowed claims for damages or delays for these adjustments should they be necessary However, additional time will be considered for the contract period

This action, however, shall in no way be interpreted as relieving the Contractor of his responsibilities under the terms of the contract as set out in the plans and specifications

The Contractor shall repair any damage to the facilities caused by his operations at the Contractor's expense and shall restore facilities to service in a timely manner

BUILDER'S RISK INSURANCE

Builder's Risk Insurance and Professional Liability Insurance will not be required for this project

EXPERIENCE

All bidders must have done a like project within the last two years

EXCESS, WASTE MATERIAL AND DEBRIS

All excess material, waste material and debris shall become the property of the Contractor and shall be properly disposed of off-site No separate payment shall be made for same

LABOR AND EQUIPMENT

All labor and equipment furnished by the contractor will be considered subsidiary to the various bid items and will not be paid for directly

FIELD OFFICE

For this project the Contractor will not have to provide a field office

INCIDENTALS

All items of work required under this contract not specifically called for in the proposal as pay items shall be considered incidental to the various bid items and no separate payment shall be made for same.

FLAGMEN

During certain phases of construction flagmen will be required to direct and control traffic Contractor shall employ off-duty police officers or certified flagmen to perform these duties This work will be paid under Item 510, One-Way Traffic Control Flagger control shall be maintained in accordance with the latest Texas Manual on Traffic Control Devices (TMUTCD)

SPECIAL REQUIREMENTS:

1) The attached schedule of wages per hour for this Contract follow

Stewart Road from 7 ½ Mile Road to Cove View

General Decision Number TX120056 01/06/2012 TX56

Superseded General Decision Number TX20100066

State Texas

Construction Type Highway

Counties Austin, Brazoria, Chambers, Fort Bend, Galveston, Hardin, Harris, Jefferson, Liberty, Montgomery, Orange, San Jacinto and Waller Counties in Texas

HIGHWAY CONSTRUCTION PROJECTS (excluding tunnels, building structures in rest area projects & railroad construction, bascule, suspension & spandrel arch bridges designed for commercial navigation, bridges involving marine construction, and other major bridges)

Modification Number	Publication Date
0	01/06/2012

* SUTX2011-013 08/10/2011

	Rates	Fringes
CEMENT MASON/CONCRETE FINISHER (Paving and Structures)	$ 12 98	
ELECTRICIAN	$ 27 11	
FORM BUILDER/FORM SETTER		
Paving & Curb	$ 12 34	
Structures	$ 12 23	
LABORER		
Asphalt Raker	$ 12 36	
Flagger	$ 10 33	
Laborer, Common	$ 11 02	
Laborer, Utility	$ 11 73	
Pipelayer	$ 12 12	
Work Zone Barricade Servicer	$ 11 67	
PAINTER (Structures)	$ 18 62	
POWER EQUIPMENT OPERATOR		
Asphalt Distributor	$ 14 06	
Asphalt Paving Machine	$ 14 32	
Broom or Sweeper	$ 12 68	
Concrete Pavement Finishing Machine	$ 13 07	
Concrete Paving, Curing,		

Float, Texturing Machine	$ 11 71
Concrete Saw	$ 13 99
Crane, Hydraulic 80 Tons or less	$ 13 86
Crane, Lattice boom 80 tons or less	$ 14 97
Crane, Lattice boom over 80 Tons .	$ 15 80
Crawler Tractor .	$ 13 68
Excavator, 50,000 pounds or less	$ 12 71
Excavator, Over 50,000 pounds	$ 14 53
Foundation Drill, Crawler Mounted	$ 17 43
Foundation Drill, Truck Mounted	$ 15 89
Front End Loader 3 CY or Less	$ 13 32
Front End Loader, Over 3 CY	$ 13 17
Loader/Backhoe	$ 14 29
Mechanic	$ 16 96
Milling Machine	$ 13 53
Motor Grader, Fine Grade	$ 15 69
Motor Grader, Rough	$ 14 23
Off Road Hauler	$ 14 60
Pavement Marking Machine	$ 11 18
Piledriver	$ 14 95
Roller, Asphalt	$ 11 95
Roller, Other	$ 11 57
Scraper	$ 13 47
Spreader Box	$ 13 58
Servicer	$ 13 97
Steel Worker	
Reinforcing Steel	$ 15 15
Structural Steel Welder	$ 12 85
Structural Steel	$ 14 39
TRUCK DRIVER	
Low Boy Float	$ 16 03
Single Axle	$ 11 46
Single or Tandem Axle Dump	$ 11 48
Tandem Axle Tractor w/Semi Trailer	$ 12 27

WELDERS - Receive rate prescribed for craft performing operation to which welding is incidental

==========

Unlisted classifications needed for work not included within the scope of the classifications listed may be added after award only as provided in the labor standards contract clauses

(29CFR 5 5 (a) (1) (ii))

The body of each wage determination lists the classification and wage rates that have been found to be prevailing for the cited type(s) of construction in the area covered by the wage determination The classifications are listed in alphabetical order of "identifiers" that indicate whether the particular rate is union or non-union

Union Identifiers

An identifier enclosed in dotted lines beginning with characters other than "SU" denotes that the union classification and rate have found to be prevailing for that classification Example. PLUM0198-005 07/01/2011 The first four letters , PLUM, indicate the international union and the four-digit number, 0198, that follows indicates the local union number or district council number where applicable , i e , Plumbers Local 0198 The next number, 005 in the example, is an internal number used in processing the wage determination The date, 07/01/2011, following these characters is the effective date of the most current negotiated rate/collective bargaining agreement which would be July 1, 2011 in the above example

Union prevailing wage rates will be updated to reflect any changes in the collective bargaining agreements governing the rate

Non-Union Identifiers

Classifications listed under an "SU" identifier were derived from survey data by computing average rates and are not union rates, however, the data used in computing these rates may include both union and non-union data Example SULA2004-007 5/13/2010 SU indicates the rates are not union rates, LA indicates the State of Louisiana, 2004 is the year of the survey, and 007 is an internal number used in producing the wage determination A 1993 or later date, 5/13/2010, indicates the classifications and rates under that identifier were issued as a General Wage Determination on that date

Survey wage rates will remain in effect and will not change until a new survey is conducted

---

WAGE DETERMINATION APPEALS PROCESS

1) Has there been an initial decision in the matter? This can be

* an existing published wage determination
* a survey underlying a wage determination
* a Wage and Hour Division letter setting forth a position on a wage determination matter
* a conformance (additional classification and rate) ruling

On survey related matters, initial contact, including requests for summaries of surveys, should be with the Wage and Hour Regional Office for the area in which the survey was conducted because those Regional Offices have responsibility for the Davis-Bacon survey program If the response from this initial contact is not satisfactory, then the process described in 2) and 3) should be followed

With regard to any other matter not yet ripe for the formal process described here, initial contact should be with the Branch of Construction Wage Determinations Write to

Branch of Construction Wage Determinations
Wage and Hour Division
U S Department of Labor
200 Constitution Avenue, N W
Washington, DC 20210

2) If the answer to the question in 1) is yes, then an interested party (those affected by the action) can request review and reconsideration from the Wage and Hour Administrator (See 29 CFR Part 1 8 and 29 CFR Part 7) Write to

Wage and Hour Administrator
U S Department of Labor
200 Constitution Avenue, N W
Washington, DC 20210

The request should be accompanied by a full statement of the interested party's position and by any information (wage payment data, project description, area practice material, etc) that the requestor considers relevant to the issue

3) If the decision of the Administrator is not favorable, an interested party may appeal directly to the Administrative Review Board (formerly the Wage Appeals Board) Write to

Administrative Review Board
U S Department of Labor
200 Constitution Avenue, N W
Washington, DC 20210

4) All decisions by the Administrative Review Board are final

==========

END OF GENERAL DECISION

CONTRACTOR'S AFFIDAVIT OF PAYMENT OF DEBTS AND CLAIMS

AIA Document G706

OWNER ☐
ARCHITECT ☐
CONTRACTOR ☐
SURETY ☐
OTHER ☐

TO (Owner)

ARCHITECT'S PROJECT NO

CONTRACT FOR

CONTRACT DATE

PROJECT.
(name, address)

State of
County of

The undersigned, pursuant to Article 9 of the General Conditions of the Contract for Construction, AIA Document A201, hereby certifies that, except as listed below, he has paid in full or has otherwise satisfied all obligations for all materials and equipment furnished, for all work, labor, and services performed, and for all known indebtedness and claims against the Contractor for damages arising in any manner in connection with the performance of the Contract referenced above for which the Owner or his property might in any way be held responsible

EXCEPTIONS (If none, write "None" If required by the Owner, the Contractor shall furnish bond satisfactory to the Owner for each exception)

SUPPORTING DOCUMENTS ATTACHED HERETO

1 Consent of Surety to Final Payment Whenever Surety is involved, Consent of Surety is required AIA DOCUMENT G707, CONSENT OF SURETY, may be used for this purpose.
Indicate attachment (yes) (no)

The following supporting documents should be attached hereto if required by the Owner

1 Contractor's Release or Waiver of Liens, conditional upon receipt of final payment

2 Separate Releases or Waivers of Liens from Subcontractors and material and equipment suppliers, to the extent required by the Owner, accompanied by a list thereof

3 Contractor's Affidavit of Release of Liens (AIA DOCUMENT G706A)

CONTRACTOR

Address

BY

Subscribed and sworn to before me this

day of 19

Notary Public

My Commission Expires

CONTRACTOR'S AFFIDAVIT OF RELEASE OF LIENS

AIA DOCUMENT G706A

OWNER ☐
ARCHITECT ☐
CONTRACTOR ☐
SURETY ☐
OTHER ☐

TO (Owner)

ARCHITECT'S PROJECT NO

CONTRACT FOR

CONTRACT DATE

PROJECT
(name, address)

State of
County of

The undersigned, pursuant to Article 9 of the General Conditions of the Contract for Construction, AIA Documen A201, hereby certifies that to the best of his knowledge, information and belief, except as listed below, the Release or Waivers of Lien attached hereto include the Contractor, all Subcontractors, all suppliers of materials and equip ment, and all performers of Work, labor or services who have or may have liens against any property of the Owne arising in any manner out of the performance of the Contract referenced above

EXCEPTIONS (If none, write 'None" If required by the Owner, the Contractor shall furnish bond satisfactory to the Owner for each exception)

SUPPORTING DOCUMENTS ATTACHED HERETO

1 Contractor's Release or Waiver of Liens, conditional upon receipt of final payment

2 Separate Releases or Waivers of Liens from Subcontractors and material and equipment suppliers, to the extent required by the Owner, accompanied by a list thereof

CONTRACTOR

Address

BY

Subscribed and sworn to before me this

day of 19

Notary Public

My Commission Expires

CONSENT OF SURETY COMPANY TO FINAL PAYMENT

AIA DOCUMENT G707

OWNER ☐
ARCHITECT ☐
CONTRACTOR ☐
SURETY ☐
OTHER

PROJECT
(name, address)

TO (Owner)

ARCHITECT'S PROJECT NO:

CONTRACT FOR

CONTRACT DATE

CONTRACTOR

In accordance with the provisions of the Contract between the Owner and the Contractor as indicated above, the (here insert name and address of Surety Company)

, SURETY COMPANY

on bond of (here insert name and address of Contractor)

, CONTRACTOR

hereby approves of the final payment to the Contractor, and agrees that final payment to the Contractor shall no relieve the Surety Company of any of its obligations to (here insert name and address of Owner)

, OWNER

as set forth in the said Surety Company's bond

IN WITNESS WHEREOF,
the Surety Company has hereunto set its hand this day of 19

Surety Company

Signature of Authorized Representative

Attest
(Seal)

Title

NOTE This form is to be used as a companion document to AIA DOCUMENT G706, CONTRACTOR S AFFIDAVIT OF PAYMENT OF DEBTS ANE CLAIMS, Current Edition

AIA DOCUMENT G707 • CONSENT OF SURETY COMPANY TO FINAL PAYMENT • APRIL 1970 EDITION • AIA®
© 1970 • THE AMERICAN INSTITUTE OF ARCHITECTS, 1735 NEW YORK AVE , NW, WASHINGTON, D C 20006

CONSENT OF SURETY TO REDUCTION IN OR PARTIAL RELEASE OF RETAINAGE

AIA DOCUMENT G707 A

76

OWNER ☐
ARCHITECT ☐
CONTRACTOR ☐
SURETY ☐
OTHER

PROJECT
(name, address)

TO (Owner)

ARCHITECT'S PROJECT NO

CONTRACT FOR

CONTRACT DATE

In accordance with the provisions of the Contract between the Owner and the Contractor as indicated above, th
(here insert name and address of Surety as it appears in the bond)

, SURET

on bond of (here insert name and address of Contractor as it appears in the bond)

, CONTRACTOF

hereby approves the reduction in or partial release of retainage to the Contractor as follows

The Surety agrees that such reduction in or partial release of retainage to the Contractor shall not relieve the Sure
of any of its obligations to (here insert name and address of Owner)

, OWNE

as set forth in the said Surety's bond

IN WITNESS WHEREOF,
the Surety has hereunto set its hand this day of 19

Surety

Signature of Authorized Representative

Attest
(Seal)

Title

76

SECTION IV

General Terms and Conditions

GENERAL TERMS AND CONDITIONS

1 COUNTY AS OWNER

The word "County" in this contract refers to the County of Galveston

2 CONTRACTOR

The word "Contractor" refers to the person or entity agreeing to perform the work in this contract

3 PROGRAM ADMINISTRATOR

The term "Program Administrator" refers to the person designated by County to act on its behalf in administering this contract

4 STATUS OF CONTRACTOR

The Contractor shall at all times be considered to be an independent contractor, and will not hold itself or its employees out to be employees or agents of the County of Galveston

The Contractor shall provide, at the Contractor's expense, competent, full-time supervision of the work while actually in progress.

5 ASSIGNMENT AND SUBLETTING

The Contractor will retain full control over this contract and will not assign or subcontract said contract without the prior written consent of the County The Contractor further agrees that the subcontracting any portion or feature of the work shall not relieve the Contractor from its full obligations under this contract

6. EQUAL OPPORTUNITY

The Contractor and all Subcontractors shall not discriminate against any employee or applicant for employment because of race, religion, color, sex, or national origin

The Contractor agrees to post in conspicuous places, available to employees and applicants for employment, notices setting forth the policies of non-discrimination.

7 CONTRACT

This contract consists of the following documents, Invitation to Bid, Instructions to Bidders, Bid Proposal, Contract Award, Special Terms and Conditions (including specifications, drawings and addenda), General Terms and Conditions, and any other

documents referenced herein or attached hereto for the work Collectively these documents may also be referred to as the Plans and Specifications

8 **DISCREPANCIES AND OMISSIONS**

In the event of any discrepancy between the Plans and Specifications, or otherwise, or in the event of any doubt as to the meaning and intent of any portion of the Plans and Specifications, the Program Administrator shall define which is intended to apply to the work Such definition shall be final and binding on Contractor

9 **COLLATERAL CONTRACT**

The County reserves the rights to provide by separate contract or otherwise, in such manner as not to delay its programs or damage said Contractor, all labor and material essential to the completion of the work that is not included in this contract

10 **TIME**

The Contractor is advised that time for completion will consist of the number of calendar days set out in the Contract Award

The time for completion will begin to run on the day after the issuance of a notice to proceed by the Program Administrator The Contractor is required to start work no later than ten (10) working days after the issuance of the written notice to proceed Failure to timely commence operations may be deemed by the County to be a default The Contractor will complete the work at that site within the time period specified If there is more than one site listed on the notice to proceed, work for all sites must be completed not later than is specified for each site by the Program Administrator

11 **TIME AND ORDER OF COMPLETION**

The Contractor will commence work within ten (10) working days after the issuance of the notice to proceed and will substantially complete it within the time specified in the Contract Award

By the term "substantially completed" is meant that work shall be fully completed with the exception of minor miscellaneous work and adjustment

12 **EXTENSION OF TIME**

Should the Contractor be delayed in the completion of the work by an act or neglect of the County or Program Administrator, or by any employee of either, or by other Contractors employed by the County, or by changes ordered in the work, or by strikes, lockouts, fire, or unusual delays by common carriers, or unavoidable cause or causes beyond the Contractor's control or by any cause which the Program Administrator shall decide justifies the delay, then an extension of time shall be allowed for completing the

work sufficient to compensate for the delay The Contractor shall give the Program Administrator prompt notice in writing of the cause of such delay The amount of the extension will be determined by the Program Administrator

13. **LOSSES FROM NATURAL CAUSES**

All damage to the work from the action of the elements, or from any unforeseen circumstances in the prosecution of the work shall be repaired by the Contractor at his own cost

14 **KEEPING OF PLANS AND SPECIFICATIONS ACCESSIBLE**

The Contractor shall keep one (1) copy of all Plans and Specifications constantly accessible at the work site and available for inspection at all times

15 **PERFORMANCE OF WORK**

All work shall be performed and completed in a thorough, workmanlike manner and in accordance with the latest proven practices of the trade by thoroughly skilled and experienced workers

16 **STORAGE AND CLEANUP**

The County does not assume responsibility for any materials, tools, or equipment stored on or about the worksite The worksite shall be cleared of debris by the Contractor continuously through the progress of the work and also upon final completion of the work

17 **WORKING HOURS**

The contractor is only permitted to perform work during the hours of 8.00 AM to 5 00 PM Monday thru Friday.

18 **WORKSITE SECURITY**

Contractor shall maintain the security of the worksite and shall restrict access to the site to the following

a) its employees,
b) employees of subcontractors,
c) representatives of manufacturers whose goods are utilized in the work and are called to the site by either the Contractor or the Program Administrator, and
d) agents and/or employees of the County

Contractor shall provide adequate protection to persons on the worksite, adjacent properties, and utilities as is necessary to keep each free of damage or injury Contractor

shall furnish all barricades, warning lights and other safety devices necessary for the safety and protection of the public and shall remove them upon completion of the work performed on those premises under the terms of this contract

Contractor will have complete control over the work site and shall be fully responsible for any loss of or damage to any County property from any cause and will reimburse County in the event of any loss or damage to County's property from any cause

Contractor shall take proper means to protect adjacent or adjoining properties which might be injured or seriously effected by construction undertaken under this Agreement from any damage or injury by reason of said process of construction. Contractor shall be liable for any and all claims for such damage on account of its failure to fully protect all adjoining properties

19 **ALCOHOL/DRUG FREE WORKPLACE**

The County is committed to maintaining an alcohol and drug free workplace Possession, use or being under the influence of alcohol or controlled substances by the Contractor's employees while in the performance of this Contract is prohibited Violation of this requirement shall constitute grounds for immediate termination of the contract

20 **LABOR**

Contractor is encouraged to use local labor, but not at the expense of poor workmanship and higher cost

Contractor will not discriminate against any employee or applicant for employment because of race, religion, creed, color or national origin. Contractor agrees to post in a conspicuous place a notice setting forth provisions of this non-discrimination clause
In the event of Contractor's non-compliance with the non-discrimination clause of this contract, the contract entered into may be canceled in whole or in part

21 **WAGE RATES**

This Contract is a Public Works Contract governed by V T C A , Government Code, Chapter 2258 That Act requires Contractor to pay workers not less than the general prevailing rate of per diem wages for work of a similar character in the locality in which the work is performed and not less than the general prevailing rate of per diem wages for legal holiday and overtime work

Prevailing wage rates determined by the United States Department of Labor in accordance with the Davis-Bacon Act (40 U S C Section 276a et seq) are used in this contract and are incorporated and made a part hereof

In the event other crafts or types of workers are required than are listed therein, such workers shall be paid at a rate not less than the prevailing rate for similar workers in the

Galveston County area

Contractor acknowledges that.

A) Pursuant to V T C A., Government Code §2258 022, a violation of the obligation to pay workers the prevailing wages shall result in Contractor paying the County the amount of $60 00 for each worker employed for each calendar day or part of the day that the worker is paid less than the wage rates stipulated in the Contract; and

B) Contractors and Subcontractors shall be required to keep a record showing the name and occupation of each worker employed by Contractor or Subcontractor in the construction of the work called for in the contract and the actual per diem wages paid to each worker The record shall be open at all reasonable hours to inspection by the officers and agents of the County

Contractor represents it has read this law and the penalties provided prior to entering into this agreement

22 **UTILITIES**

Contractor shall be responsible for any charges which may be made by any city or utility companies for the work to be performed by Contractor.

23 **PARKING**

Contractor shall be responsible for the expense of parking the Contractor's vehicle(s) in a legal manner and at no expense or inconvenience to the County

24 **FIRE AND SAFETY**

Contractor is completely responsible for fire protection at the job site as well as the safety of its own employees as well as those entering onto the job site

25. **CONTRACTOR'S BUILDINGS**

The building of structures for housing men, or the erection of tents or other forms of protection will be permitted only at such places as the Program Administrator shall permit, and the sanitary conditions of the grounds in or about such structures shall at all times be maintained in the manner satisfactory to the Program Administrator

26 **INSURANCE**

Contractor shall obtain and pay for insurance set forth below prior to commencing work, and shall file with the Program Administrator certificates or copies of policies for approval and as proof of coverage

1) Workmen's Compensation
   a State Statutory
   b Applicable - Statutory

2) Comprehensive General Liability (including Premises – Operations, Independent Contractor's Protective, Products and Completed Operations, Broad Form Property Damage)
   a Bodily Injury –
$100,000.00 each person, each occurrence
$300,000 00 Aggregate, each occurrence
   b Property Damage including loss of use –
      $100,000 00 Each occurrence
   c Products and Completed Operations to be maintained for 1 year after Final Payment
   d Property Damage Liability Insurance will provide X, C or U coverage as applicable

3) Contractual Liability
   a Bodily Injury
      $100,000 00 Each Person
      $300,000 00 Each occurrence
   b Property Damage
      $100,000 00 Each occurence

4) Personal injury, with Employment Exclusion deleted
   $100,000 00 Each occurence

5) Comprehensive Automobile Liability (including owned, non-owned and hired motor vehicles)
   a Bodily Injury
      $100,000 00 Each Person
      $300,000 00 Each occurrence
   b Property Damage
      $100,000 00 Each occurrence

6) Builders Risk Insurance

The contractor shall furnish one copy of each Certificate of Insurance herein required with each signed copy of the Agreement and prior to commencement of the work The contractor shall furnish to the Owner copies of any endorsements that are subsequently issued amending coverage or limits Receipt of all required notices shall be evidenced by return receipt of registered or Certified letter The policies shall contain provision that coverages will not be cancelled until at least thirty days' prior written notice has been given to the County In the event of such notice of cancellation being given the contractor will provide substitute policies with the same provisions to county prior to the effective date of such cancellation

The above requirements do not establish limits of Contractor's liability

Contractor shall at all times during the term of this contract and any extensions thereof maintain such insurance coverage

Such insurance is to be provided at the sole cost of Contractor

All policies of insurance shall waive all rights of subrogation against County, its officers, employees and agents

The County shall be named as "additional insured" on such policies as are specified above

The County reserves the right to require additional insurance should it be deemed necessary

27. **SANITATION**

Necessary sanitary conveniences for the use of laborers at the worksite, properly secluded from the public observation, shall be constructed and maintained by Contractor in such manner at such points as shall be approved by the Program Administrator, and their use shall be strictly enforced

28 **DAILY CLEANUP**

Contractor shall confine to the work site all materials and refuse generated by Contractor's operations Materials which are stored on-site shall be stored in an orderly manner Materials or refuse from demolition and/or removal operations which become scattered in adjacent areas shall be collected and returned to the work site and satisfactorily removed Truck hauling materials must be covered to keep materials from littering streets

29 **FINAL GRADING**

If grading is required, when work is complete, Contractor shall grade the site to fill in holes and make a presentable appearance without disturbing trees and add fill dirt if needed Contractor may not leave voids in the grading and compaction of the property The land shall have a smooth appearance without concrete, bricks, building materials, and other debris on the surface

30 **RIGHT OF ENTRY**

County reserves the right to enter the property or location at which the work is being conducted, by such agents as it may elect, for the purpose of inspecting the work, or for the purpose of constructing or installing such collateral work as County may desire, or for any other purpose deemed necessary by County

31. **INSPECTION**

County reserves the right to inspect the work done by Contractor at any time

The inspection may include examination of the material furnished and the work done under this agreement to ensure compliance with the plans and specifications

Contractor shall furnish all reasonable aid and assistance required by the inspector(s) for the proper inspection and examination of the work The inspector(s) may make any order requiring remedy of deficient performance at any time Should Contractor object to any order by any inspector, Contractor may, within 24 hours, make written appeal to the Program Administrator for his decision, which decision shall be final and binding on Contractor

The approval or failure of an inspector to reject non complying work or materials shall not relieve Contractor of his obligation to perform the work in full compliance with the plans and specifications for the work

Contractor shall be responsible for the costs associated by the exposing and covering of any item of concealed work for which an inspection is performed

32 **DEFECTS AND THEIR REMEDIES**

It is further agreed that if the work or any part thereof, or any material brought on the ground for use in the work or selected for the same, shall be deemed by the Program Administrator as unsuitable or not in conformity with the specifications Contractor shall, after receipt of written notice thereof from the Program Administrator, forthwith remove such material and rebuild or otherwise remedy such work so that it shall be in full accordance with this contract

33 **SUBSTANTIAL COMPLETION**

When the Contractor determines that the work is substantially complete, he shall advise the Program Administrator of such and schedule a time for the Program Administrator to inspect the work Contractor shall have all systems fully functional and operational for the inspection of the Program Administrator All phases of the work will be examined by the Program Administrator, who will note any deficiencies in the work and notify Contractor of the same

The Program Administrator may acknowledge that the project is substantially complete if the work has been completed to the point where the work can be utilized for the general purpose for which it was undertaken; however, if the project is found not to be substantially complete, the Program Administrator will so advise the contractor

34 **FINAL COMPLETION AND ACCEPTANCE**

Within ten (10) days after Contractor has given the Program Administrator written notice that the work has been completed, or substantially completed, the Program Administrator shall inspect the work and, within said time, if the work be found to be completed or substantially completed in accordance with the plans and specifications, the Program Administrator shall issue a substantial completion certificate

Should such inspection reveal deficiencies on the work, the Program Administrator will deliver a list of deficiencies to Contractor for immediate repair No final payment will be made until all deficiencies have been remedied

35 **PARAGRAPH 35 HAS BEEN DELETED**

36 **PROGRESS PAYMENTS AND RETAINAGE**

If this contract provides for the making of progress payments, Contractor shall make application to County for payment utilizing forms provided by County for that purpose Contractor shall state the percentage or the limits of the work performed and request payment for the amount of acceptable work performed Applications for payment shall be made monthly by Contractor

The County shall then pay the Contractor per the provisions of Texas Government Code, Chapter 2251, on or before 30 days thereafter, the total amount of the request, less 5% of the amount thereof, which 5% shall be retained until final payments, and further less all previous payments, and further less all further sums that may be retained by the County under the terms of this agreement

Upon the attainment of substantial completion, payment will be made so that the sum of all payments made under the contact equals Ninety Five Percent (95%) of the total contract amount

37 **ESTIMATED QUANTITIES**

This Contract, including the specifications, plans and estimates, is intended to show clearly all the work to be done and material to be furnished hereunder. The estimated quantities of the various classes of work to be done and material to be furnished under this contract are approximate and are to be used as a basis for estimating the probable cost of the work and for comparing the proposals offered for the work It is understood and agreed that the actual amount of work to be done and material to be furnished under this contract may differ somewhat from these estimates, and that the basis for payment under this contract shall be the plan quantity or actual amount of such work whichever is specified It is further understood that the County does not guarantee any minimum amount of work under this Contract

Contractor agrees that it will make no claim for damages, anticipated profits or

otherwise on account of any differences which may be found between the quantities of work actually done, the material actually furnished under this Contract and the estimated quantities contemplated and contained in the proposals

38 **CHANGES AND ALTERATIONS**

Contractor further agrees that Program Administrator may make such changes and alterations as County may see fit, in the line, grade, form dimensions, plans or materials for the work herein contemplated, or any part thereof, either before or after the beginning of the contract construction, without affecting the validity of this Contract and the accompanying bonds

If such changes or alterations diminish the quantity of the work to be done, they shall not constitute the basis for a claim for damages, or anticipated profits on the work that may be dispensed with If they increase the amount of the work, and the increased work can fairly be classified under the specifications, such increase shall be paid for according to the quantity actually done and at the unit price established for such work under this contract, otherwise such additional work shall be paid for as provided under the paragraph entitled "EXTRA WORK" In case Program Administrator shall make such changes or alterations as shall make useless any work already done or material already furnished or used in said work, then County shall recompense Contractor for any material or labor so used, and for any actual loss occasioned by such change due to actual expenses incurred in preparation for the work as originally planned

39 **EXTRA WORK**

The term "Extra Work" as used in this contract shall be understood to mean and include all work that may be required by the Program Administrator to be done by Contractor to accomplish any change, alteration or addition to the work shown in the plans and specifications

It is agreed that Contractor shall perform all Extra Work under the direction of the Program Administrator when presented with a Written Work Order signed by the Program Administrator subject, however, to the right of Contractor to require a written confirmation of such Extra Work Order by the County Commissioners' Court It is also agreed that the compensation to be paid Contractor for performing said Extra Work shall be determined by one or more of the following methods

Method (a) - By agreed unit prices, or
Method (b) - By agreed lump sum or
Method (c) - If Neither Method (a) nor Method (b) can be agreed upon before the Extra Work is commenced, then Contractor shall be paid the "Actual field cost" of the work plus fifteen (15) percent

In the event said Extra Work be performed and paid for under Method (c), then the provisions of this paragraph shall apply and the "actual field cost" is hereby defined to

include the cost of all workmen, such as foremen, timekeepers, merchants, and laborers, and materials, supplies, teams, trucks, rentals on machinery and equipment for time actually employed or used on such Extra Work plus actual transportation charges necessarily incurred, if the kind of equipment or machinery is not already on the job, together with all power, fuel, lubricants, water and similar operating expenses, also all necessary incidental expenses incurred directly on account of such Extra Work including Social Security, Old Age Benefits and other payroll taxes, and a ratable proportion of premiums on Construction and Maintenance Bonds, Public Liability and Property Damage and Workmen's Compensation, and all other insurance as may be required by any law or ordinance, or directed by the Program Administrator or by him agreed The Program Administrator may direct the form in which accounts of the "actual field cost" shall be kept and may also specify in writing, before the work commences, the method of doing the work and the type and kind of machinery and equipment to be used, otherwise these matters shall be determined by Contractor Unless otherwise agreed upon, the prices for the use of machinery and equipment shall be determined by using the one hundred (100) percent of the actual hourly or daily rate (for the time used plus time in moving to and from Job) of the latest schedule of Equipment Ownership Expense adopted by the Association General Contractors of America Where practicable the terms and prices for the use of Machinery and Equipment shall be incorporated in the Written Extra Work Order The fifteen (15) percent of the "Actual Field Cost" to be paid Contractor shall cover and compensate him for his profit, overhead, general superintendence and field office expense, and all other elements of cost and expense not embraced within the 'actual field cost" as herein defined, save that where the Contractor's Camp or Field Office must be maintained primarily on account of such extra work, then the cost to maintain and operate same shall be included in the "actual field cost"

No claim for extra work of any kind will be allowed unless ordered in writing by the Program Administrator In case any orders or instructions, either oral or written appear to Contractor to involve extra work for which he should receive compensation, it shall make written request to the Program Administrator for written order authorizing Extra Work Should a difference of opinion arise as to what does or does not constitute extra work, or as to the payment therefor, and the Program Administrator insists upon its performance, Contractor shall proceed with the work after making written order and shall keep an accurate account of the "actual field cost" thereof, as provided under Method (c) and by this action Contractor will thereby preserve the right to submit the matter of payment to litigation

40 **FINAL PAYMENT**

Upon the issuance of the approval for payment, the Program Administrator shall certify same to County, who shall pay to Contractor the balance due Contractor under the terms of this agreement, provided it has fully performed its contractual obligations under the terms of this contract, and has provided County with a release of liens from all materialmen, suppliers and subcontractors utilized in the work

41 **HINDRANCES AND DELAYS**

No charge shall be made by Contractor for hindrances or delays from any cause (except when work is stopped by order of the County) during the progress of any portion of the work embraced in this contract. In case said work shall be stopped by the act of Program Administrator then such expense as in the judgment of the Program Administrator is caused by stopping of said work shall be paid by County to Contractor

42 **TIME OF FILING CLAIMS**

It is further agreed by both parties hereto that all questions of dispute or adjustment presented by Contractor shall be in writing and filed with the Program Administrator within a reasonable time after the Program Administrator has given any directions, order, or instruction to which Contractor desires to take exception The Program Administrator shall reply to such written exceptions by Contractor and render his final decision in writing

43 **LIQUIDATED DAMAGES FOR DELAY**

Contractor agrees that time is of the essence of this contract and that for each day of a delay of a day beyond the number of working days or calendar days herein agreed upon the completion of the work herein specified and contracted for (after due allowance for such extension of time as is provided for under Extension of Time hereinabove) County may withhold permanently from Contractor's total compensation the sum specified in the special conditions as liquidated damages for such delay

44 **ABANDONMENT BY CONTRACTOR**

Should Contractor fail to start or resume work within ten (10) days after written notification from the Program Administrator or if Contractor fails to comply with a change order or instruction of the Program Administrator, Contractor shall be declared to be in default and the Surety on the bonds shall be notified in writing and directed to complete the work, and a copy of said notice shall be delivered to Contractor

In case the Surety should fail to commence compliance with the notice for completion hereinbefore provided for within ten (10) days after services of such notice, or in the event there is no Surety, then County may provide for completion of the work in any manner it deems appropriate

45 **TERMINATION**

County may terminate this Contract

i immediately by giving written notice, if Contractor breaches its obligation under the Contract, or
ii with or without cause, after giving 30 days written notice of termination to Contractor

In the event this Contract is terminated Contractor will be paid for work satisfactorily completed The amount of such payment will be determined by the Program Administrator

46 **SALVAGE**

Any materials, equipment and fixtures specifically ordered to be salvaged under these specifications shall remain the property of County and will be delivered to the site designated by the Program Administrator All other items shall be disposed of by Contractor in compliance with all applicable laws and regulations

47 **COMPLIANCE WITH CODES**

Contractor shall comply with all city, county, and state codes, laws, and ordinances in force at the time of award of contract and applicable to such work Contractor shall obtain, at Contractor's own expense such permits, certificates, and licenses as may be required in the performance of the specified work

48 **INDEMNITY**

Contractor shall defend, indemnify, and save whole and harmless Galveston County, and it officers, agents, and employees from and against all claims and suits of whatever character, arising from the performance of this contract.

49 **PROTECTION AGAINST CLAIMS OF SUBCONTRACTORS, LABORERS, MATERIALMEN AND FURNISHERS OF MACHINERY EQUIPMENT AND SUPPLIES**

Contractor agrees to indemnify and hold County harmless from all claims of subcontractors, laborers, workmen, mechanics, materialmen and furnishers of equipment, and all supplies incurred in the performance of this contract Contractor shall furnish satisfactory evidence that all obligations of the nature hereinabove designated have been paid, discharged or waived If Contractor fails to do so, then County reserves the right to pay unpaid bills of which County has written notice direct and withhold from Contractor's unpaid compensation a sum of money reasonably sufficient to liquidate any and all such lawful claims

50. **PROTECTION AGAINST ROYALTIES, PATENTED INVENTIONS OR PROCESS, OR PATENT INFRINGEMENT**

Contractor shall, at its own expense, settle or defend any claim, suit or action brought against County and shall protect and save harmless County from all and every demand for damages, royalties or fees for any patented invention or process used by it in connection with the work done, process used or material furnished under this Contract, and shall pay any final judgement for damages, attorneys fees and costs which may be awarded against County

51 **LAWS AND ORDINANCES**

Contractor shall at all times observe and comply with all Federal, State and Local Laws, ordinances and regulations which in any manner effect the contract or the work, and shall indemnify and save harmless the County against any claim arising from the violation of any such laws and ordinances, whether by Contractor or its employees

52 **WARRANTY**

Contractor and/or its Surety will be required by County to repair, replace, restore, and/or to make such corrections as are required of it to comply strictly in all things with this contract and the Plans and Specifications and any and all of said work and/or materials, which, within a period of one year from and after the date of the passing, approval, and/or acceptance of any such work or materials, are found to be defective or to fail in any way to comply with this contract or with the Plans and Specifications

53 **PERMITS AND LICENSES**

Contractor shall be responsible for obtaining and furnishing all necessary permits and licenses, City, County, State or Federal as are required for the performance of this contract

54 **NOTICE**

Any notice required or permitted between the parties under this contract must be in writing and shall be delivered in person or mailed, certified mail, return receipt requested, or may be transmitted by fax as follows
to County at

Hon Mark Henry, County Judge
Galveston County Courthouse, 2nd floor
Galveston, TX 77550
Fax (409) 765-2915

and to Contractor at the address listed in Contractor's Bid Proposal.

55 **FORCE MAJEURE**

If the performance by County of any of its obligations under this contract is delayed by any occurrence not of its own conduct, whether an act of God or the common enemy or the result of war, riot, civil commotion, sovereign conduct, or the act or conduct of any person not a party or privy to this contract, the County is excused from its performance for a period of time as is reasonably necessary after the occurrence to remedy the effects of the occurrence

56. **APPLICABLE LAWS**

Contractor acknowledges that County is a governmental entity and this Agreement is an open record under the Open Records Act and will be discussed and voted upon in a public meeting

57 **ENTIRETY OF AGREEMENT AND MODIFICATION**

This contract contains the entire agreement between the parties. A prior agreement, promise, negotiation or representation not expressly set forth in this contract has no force or effect A subsequent modification to this contract must be in writing, signed by both parties

An official representative, employee, or agent of the County does not have authority to modify or amend this contract except pursuant to specific authority to do so granted by the Commissioners' Court

58. **SEVERABILITY; CONFORMITY WITH LEGAL LIMITATIONS**

If a provision contained in this contract is held invalid for any reason, the invalidity does not affect other provisions of the contract that can be given effect without the invalid provision, and to this end the provisions of this contract are severable

59 **GOVERNING LAW; VENUE**

This contract shall be governed by the laws of the State of Texas. Venue for an action arising under this contract shall be exclusively in Galveston County

60 **LINES AND GRADES**

The Engineer will furnish points for horizontal and vertical control Any additional stakes required by the Contractor shall be set at his expense Whenever necessary, work shall be suspended to permit this work, but such suspension will be as brief as practicable and the Contractor shall be allowed no extra compensation therefor The Contractor shall give the Engineer ample notice of the time and place where control lines and bench marks will be needed All control stakes, marks, etc shall be carefully preserved by the Contractor, and in case of careless destruction or removal by him or his employees, such control stakes, marks, etc. shall be replaced by the Engineer at the Contractor's expense.

SECTION V
SPECIFICATIONS

TECHNICAL SPECIFICATIONS

Standard Specifications For Construction And Maintenance Of Highways, Streets And Bridges, adopted by the Texas Department Of Transportation, June 2004

BASIS OF ESTIMATE:

Item	Description	Limit and Rate	Unit
260	LIME (HYD, COM OR QK)(SLURRY)	20 LB/SY	TON
265	FLY ASH (CLASS CS)	46 LB/SY	TON
292	ASPHALT STAB BASE (GR 2)(PG 64)	110 LB/SY-IN	TON
341	D-GR HMA (QCQA) TY-D PG 70-22	110 LB/SY-IN	TON

SPECIAL PROVISIONS

Special Provisions will govern and take precedence over the specifications enumerated hereon wherever in conflict therewith.

- Special Provisions to Items 1 through 9
- Special Provision to Item 305 Salvaging, Hauling, and Stockpiling Reclaimable Asphalt Pavement
- Special Provision to Item 464 Reinforced Concrete Pipe
- Special Provision to Item 474 Slotted Drain
- Special Provision to Item 500 Mobilization

SPECIAL PROVISION TO ITEM 1

"DEFINITION OF TERMS"

For this project, Item 1 of the Texas Standard Specifications is hereby amended with respect to the clauses cited below and no other clauses or requirements of this Item are waived or changed hereby

THE TERM "DEPARTMENT," "STATE," "STATE HIGHWAY DEPARTMENT OF TEXAS", "TxDOT", "TEXAS DEPARTMENT OF TRANSPORTATION", STATE DEPARTMENT OF HIGHWAYS AND PUBLIC TRANSPORTATION," "STATE DEPARTMENT OF HIGHWAYS AND PUBLIC TRANSPORTATION COMMISSION," "COMMISSION," AND "STATE HIGHWAY COMMISSION," SHALL, IN THE USE OF THE STANDARD SPECIFICATIONS FOR ALL WORK IN CONNECTION WITH THIS PROJECT, BE DEEMED TO MEAN GALVESTON COUNTY, PARTY OF THE FIRST PART IN ACCOMPANYING CONTRACT OR CONTRACTS. ANY REFERENCE IN THE TEXAS STANDARD SPECIFICATIONS TO THE STATE OF TEXAS, ITS OFFICIALS, EMPLOYEES, OR AGENTS SHALL BE DEEMED TO MEAN GALVESTON COUNTY, ITS OFFICIALS, EMPLOYEES, OR AGENTS

Articles 1.26, "Certificate of Insurance" , 1 28, "Commission", 1.47, "Department", 1 70 "Letting Offical " and 1.124 "State" are deleted

Article 1 53, "ENGINEER", is revised to read in its entirety as follows

1 53 ENGINEER. Galveston County Engineer or his authorized representatives If a representative is authorized to function as the ENGINEER'S representative with respect to certain of the ENGINEER'S activities, that representative's responsibilities and obligations shall be limited as provided in Article 1 148

Article 1 64, "INSPECTOR," is revised to read in its entirety as follows·

1 64 INSPECTOR The representative of the ENGINEER assigned and authorized to observe or inspect any or all parts of the work and the material to be used therein. A representative is authorized to function as the ENGINEER'S representative with respect to certain of the activities, and that representative's responsibilities and obligations shall be limited as provided in Article 1 148

Special Provisions to Item 1

"DEFINITION OF TERMS"

ADDITIONAL ARTICLES ARE ADDED AS FOLLOWS

1 148 CONSULTING ENGINEER Independent engineering firms contracting with Galveston County for the providing of professional engineering services. The engineering firms are the representatives of Galveston County only to the extent provided in the Contract documents and in such special instances where they are specifically authorized by Galveston County so to act. All powers and rights assigned by Galveston County to the engineering firms with respect to the work are solely and exclusively for the benefit of Galveston County --and not for the CONTRACTOR In carrying out of its powers and rights assigned by Galveston County the engineering firms shall function as a representative of Galveston County and shall act by and for Galveston County Irrespective of what authority may be assigned by Galveston County to the engineering firms, CONTRACTOR remains fully and solely responsible and liable for its obligations to perform the work in accordance with the requirements of the plans and specifications, to insure against failures in safety precautions, to carry out his work pursuant to safe methods of construction, to select and fulfill the proper manner, means, and methods in performing the work in order to meet the plans and specifications, and to complete the work in accordance with the contract documents

SPECIAL PROVISION TO ITEM 2

INSTRUCTIONS TO BIDDERS

For this project, Item 2 of the Texas Standard Specifications is hereby deleted in it's entirety

The Instructions To Bidders is included elsewhere in the Contract Documents.

SPECIAL PROVISION TO ITEM 3

AWARD AND EXECUTION OF CONTRACT

For this project, Item 3 of the Texas Standard Specifications is hereby deleted in it's entirety

The Award and Execution of Contract is included elsewhere in the Contract Documents

SPECIAL PROVISION TO ITEM 4

SCOPE OF WORK

For this project, Item 4 of the Texas Standard Specifications is hereby amended with respect to the clauses cited below and no other clauses or requirements of this Item are waived or changed hereby

ARTICLE 4 2 "CHANGES IN WORK," ARTICLE 4 3 "DIFFERING SITE CONDITIONS" and ARTICLE 4 4 "REQUESTS AND CLAIMS FOR ADDITIONAL COMPENSATION" are deleted in their entirety and replaced by Article 38 "CHANGES and ALTERATIONS" and ARTICLE 39 "EXTRA WORK" of Section IV, "General Terms and Conditions"

SPECIAL PROVISION TO ITEM 5

CONTROL OF THE WORK

For this project, Item 5 of the Texas Standard Specifications is hereby amended with respect to the clauses cited below and no other clauses or requirements of this Item are waived or changed hereby

ARTICLE 5 2 "PLANS AND WORKING DRAWINGS " The first sentence of the first paragraph is hereby revised to read as follows

When required, the Contractor shall provide working drawings to supplement the plans with all necessary details not included on the Contract plans

ARTICLE 5 5 "COOPERATION OF CONTRACTOR " The last sentence of the first paragraph is hereby revised to read as follows

The Contractor will be supplied with three (3) copies of the plans, specifications and special provisions and he shall have one (1) copy of each available on the project at all times

ARTICLE 5 6 "CONSTRUCTION SURVEYING," is hereby deleted in its entirety.

ARTICLE 5 7 "INSPECTION " The sixth sentence of the second paragraph is hereby revised to read as follows

If the uncovered work is acceptable, the costs to uncover, remove and replace or make good the parts removed will be paid for in accordance with Article 38 "Changes And Alterations" of Section IV, "General Terms And Conditions"

ARTICLE 5 8 "FINAL ACCEPTANCE," is hereby deleted in its entirety It is replaced by Article 34 "Final Completion And Acceptance" of Section IV, "General Terms And Conditions"

SPECIAL PROVISION TO ITEM 6

CONTROL OF MATERIALS

For this project, Item 6 of the Texas Standard Specifications is hereby amended with respect to the clauses cited below and no other clauses or requirements of this Item are waived or changed hereby

ARTICLE 6 1 "SOURCE CONTROL " Paragraph A "Buy America" and B "Buy Texas" are hereby deleted in their entirety

ARTICLE 6 7 "Department-furnished Material" is hereby deleted in it's entirety

SPECIAL PROVISION TO ITEM 7

LEGAL RELATIONS AND RESPONSIBILITIES

For this project, Item 7 of the Texas Standard Specifications is hereby amended with respect to the clauses cited below and no other clauses or requirements of this Item are waived or changed hereby

ARTICLE 7 4 "INSURANCE AND BONDS" is hereby deleted in its entirety

ARTICLE 7 5 "RESTORING SURFACES OPENED BY PERMISSION " The third sentence of the first paragraph is hereby revised to read as follows

Payment for repair of surfaces opened by permission will be made in accordance with Article 38 "Changes And Alterations" of Section IV, "General Terms And Conditions"

SPECIAL PROVISION TO ITEM 8

PROSECUTION AND PROGRESS

For this project, Item 8 of the Texas Standard Specifications is hereby amended with respect to the clauses cited below and no other clauses or requirements of this Item are waived or changed hereby

ARTICLE 8 1 "PROSECUTION OF WORK" The third sentence in the first paragraph is hereby revised to read as follows

"The Contractor shall begin the work to be performed under the contract within ten (10) days after the date of the authorization to begin work as shown on the work order

ARTICLE 8 2 "PROGRESS SCHEDULES", B "CONSTRUCTION CONTRACTS" The first sentence in the first paragraph is hereby revised to read as follows

If required by the Engineer, before starting work on a construction Contract, prepare and submit a progress schedule based on the sequence of work and traffic control plan shown in the Contract

SPECIAL PROVISION TO ITEM 9

MEASUREMENT AND PAYMENT

For this project, Item 9 of the Texas Standard Specifications is hereby amended with respect to the clauses cited below and no other clauses or requirements of this Item are waived or changed hereby

ARTICLE 9 2 "PLANS QUANTITY MEASUREMENT" is hereby deleted in its entirety

ARTICLE 9 4 "PAYMENT FOR EXTRA WORK" is hereby revised to read as follows·

Extra work ordered, performed and accepted will be paid for in accordance with ARTICLE 39, "EXTRA WORK" of Section IV, "General Terms and Conditions"

ARTICLE 9 5 "FORCE ACCOUNT" is hereby deleted in its entirety

ARTICLE 9 6 "PROGRESS PAYMENTS" is hereby deleted in its entirety and replaced by ARTICLE 36, "PROGRESS PAYMENTS AND RETAINAGE" of Section IV, "General Terms and Conditions"

ARTICLE 9 8 "FINAL PAYMENT" is hereby deleted in its entirety and replaced by ARTICLE 34, "FINAL COMPLETION AND ACCEPTANCE" and ARTICLE 40, "FINAL PAYMENT" of Section IV, "General Terms and Conditions"

SPECIAL PROVISION TO ITEM 305

SALVAGING, HAULING, AND STOCKPILING RECLAIMABLE ASPHALT PAVEMENT

For this project, Item 305 of the Texas Standard Specifications is hereby amended with respect to the clauses cited below and no other clauses or requirements of this Item are waived or changed hereby

ARTICLE 305 2 CONSTRUCTION is hereby revised to read as follows

Remove dirt, raised pavement markings, and other debris, as directed Remove the reclaimable asphalt material as shown on the plans or as directed Unless otherwise shown on the plans, ensure that 95% of the reclaimed material passes a 2-in sieve Do not contaminate asphalt material during the removal, transportation, or storage Repair pavement to remain that is damaged by the removal operations

Provide a clean, smooth, and well-drained stockpile area free of trash, weeds, and grass Separate different types or quality of asphalt material into different stockpiles as directed Stockpile material as shown on the plans or as directed

The City retains ownership of the reclaimed asphalt material. The plans or the Engineer may allow or require the use of salvaged material for other Items in the Contract If not used in other construction items of this Contract, stockpile the salvaged material at the Recycling Center located at 702 61st Street, Galveston, TX 77551

SPECIAL PROVISION TO ITEM 464

REINFORCED CONCRETE PIPE

For this project, Item 464 of the Texas Standard Specifications is hereby amended with respect to the clauses cited below and no other clauses or requirements of this Item are waived or changed hereby

ARTICLE 464 4. MEASUREMENT is hereby revised to read as follows

This item will be measured by the foot Measurement will be made between the ends of the pipe barrel along the flow line, not including safety end treatments Safety end treatments will be measured in accordance with Item 467, "Safety End Treatment " Pipe that will be jacked, bored, or tunneled will be measured in accordance with Item 467, "Jacking, Boring, or Tunneling Pipe or Box." Measurement of spurs, branches, or new connecting pipe will be made from the intersection of the flow line with the outside surface of the pipe into which it connects Where inlets, headwalls, catch basins, manholes, junction chambers, or other structures are included in lines of pipe, the length of pipe tying into the structure wall will be included for measurement, but no other portion of the structure length or width will be included

For multiple pipes, the measured length will be the sum of the lengths of the barrels

SPECIAL PROVISION TO ITEM 474

SLOTTED DRAIN

For this project, Item 474 of the Texas Standard Specifications is hereby amended with respect to the clauses cited below and no other clauses or requirements of this Item are waived or changed hereby

ARTICLE 474 4 MEASUREMENT is hereby revised to read as follows

This item will be measured by the foot between the ends of the pipe along the flow line

SPECIAL PROVISION TO ITEM 500

MOBILIZATION

For this project, Item 500 of the Texas Standard Specifications is hereby amended with respect to the clauses cited below and no other clauses or requirements of this Item are waived or changed hereby

ARTICLE 500 3 PAYMENT is hereby revised to read as follows

1 50% of the lump sum bid will be accounted for in the first invoice

2 25% of the lump sum bid will be accounted for in the second invoice.

3 25% of the lump sum bid will be accounted for in the third invoice

Payments will be made upon presentation of a paid invoice for the payment bond, performance bond, and required insurance

WATER LINE TECHNICAL SPECIFICATIONS

When applicable, the sections referenced in the water line specifications attached herein shall adhere to the appropriate portions of the contract

SECTION	TITLE
01526	TRENCH SAFETY SYSTEMS
01563	CONTROL OF GROUND WATER AND SURFACE WATER
02051	ABANDONMENT OF SANITARY SEWERS
02227	EXCAVATION AND BACKFILL FOR UTILITIES
02228	EXTRA UNIT PRICE WORK FOR EXCAVATION AND BACKFILL
02229	UTILITY BACKFILL MATERIALS
02249	GEOTEXTILE
02317	AUGERING PIPE FOR WATER LINES
02604	VALVE BOXES, METER BOXES, AND METER VAULTS
02610	DUCTILE IRON PIPE AND FITTINGS
02611	STEEL PIPE AND FITTINGS
02619	HDPE SOLID WALL PIPE
02620	PVC PIPE
02629	POLYURETHANE COATINGS ON STEEL OR DUCTILE IRON PIPE
02630	POLYETHYLENE WRAP
02640	GATE VALVES
02641	BUTTERFLY VALVES
02645	FIRE HYDRANT ASSEMBLY
02664	WATER MAINS

SECTION	TITLE
02665	WATER TAP AND SERVICE LINE INSTALLATIONS
02667	WET CONNECTIONS
02669	CUT, PLUG AND ABANDONMENT OF MAINS
02675	DISINFECTION OF WATER LINES
02676	HYDROSTATIC TESTING OF PIPELINES
03305	CONCRETE FOR UTILITY CONSTRUCTION

SECTION 01526

TRENCH SAFETY SYSTEMS

PART 1 GENERAL

1 01 SECTION INCLUDES

A Trench safety system for the construction of trench excavations.

B Trench safety system for structural excavations which fall under provisions of State and Federal trench safety laws

1 02 UNIT PRICES

A Measurement for trench safety systems used on trench excavations is on a linear foot basis, when listed as a separate unit price within the bid proposal, measured along the centerline of the trench, including manholes and other line structures. If no trench safety unit price is listed within the bid proposal, any trench safety required for the work will be considered incidental to the work performed No separate measurement will be made of shoring systems used by the Contractor for protection unless identified as Special Shoring on the Drawings. Shoring, other than Special shoring, will be included in the trench safety system measurements

B Measurement for Special Shoring system installations shown on the Drawings and included in the bid schedule for trench excavations, is on a square foot basis, or lump sum basis, as specified in the bid proposal

C No payment will be made for trench safety systems for structural excavations under this section Include payment for trench safety system in applicable structure installation sections

1 03 DEFINITIONS

A A trench is defined as a narrow excavation (in relation to its depth) made below the surface of the ground In general, the depth is greater than the width, but the width of a trench (measured at the bottom) is not greater than 15 feet

B The trench safety system requirements apply to larger open excavations if the erection of structures or other installations limits the space between the excavation slope and the installation to dimensions equivalent to a trench as defined

C Competent Person is one who is capable of identifying existing and predictable hazards in the surroundings or working conditions which are unsanitary, hazardous, or dangerous to employees, and who has authorization to take prompt corrective measure to eliminate them

D Trench Safety Systems include both Protective Systems and Shoring Systems but are not limited to sloping, sheeting, trench boxes or trench shields, slide rail systems, sheet piling, cribbing, bracing, shoring, dewatering or diversion of water to provide adequate drainage

1 Protective Systems A method of protecting employees from cave-ins, from material that could fall or roll from an excavation face or into an excavation, or from the collapse of an adjacent structure

2 Shoring System A structure that supports the sides of an excavation and which is designed to prevent cave-ins, or to prevent movements of the ground affecting adjacent installations or improvements.

3 Special Shoring A shoring system meeting Special Shoring Requirements for locations identified on the Drawings

1 04 SUBMITTALS

A Submittals shall conform to requirements of sections and provisions of these specifications

B Submit a safety program specifically for the construction of trench excavation Design the trench safety program to be in accordance with OSHA 29CFR standards governing the presence and activities of individuals working in and around trench excavations, and in accordance with any Special Shoring requirements at locations shown on the Drawings

C Have construction and shop drawings for trench safety systems sealed as required by OSHA by a licensed Professional Engineer retained and paid by the Contractor

D Review of the safety program by the Owner Representative will only be in regard to compliance with the Contract Documents and will not constitute approval by the Owner or the Owner Representative nor relieve Contractor of obligations under State and Federal trench safety laws

1 05 REGULATORY REQUIREMENTS

A Install and maintain trench safety systems in accordance with the provision of Excavations, Trenching, and Shoring, Federal Occupation Safety and Health Administration (OSHA) Standards, 29CFR, Part 1926, Subpart P, as amended, including Final Rule, published in the Federal Register Vol. 54, No. 209 on Tuesday, October 31, 1989 and subsequent updates The sections that are incorporated into these specifications by reference include Sections 1926-650 through 1926-652 and additional sections that may be adopted subsequent to the adoption of this specification

B The Contractor can locate a copy of the OSHA standards included in "Subpart P - Excavations" from the Federal Register Vol 54, No 209 is available upon request to

Contractors bidding on Owner's projects The Owner assumes no responsibility for the accuracy of the reproduction The Contractor is responsible for obtaining a copy of this section of the Federal Register

C The Contractor must comply with any legislation that has been enacted by the Texas Legislature with regard to Trench Safety Systems, is hereby incorporated, by reference, into these specifications Refer to Texas Health and Safety Code Ann , §756 021 (Vernon 1991)

D Reference materials, if developed for a specific project, will be issued with the Bid Documents, including the following.

1 Geotechnical information obtained for use in design of the trench safety system

2 Special Shoring Requirements, if applicable

1 06 INDEMNIFICATION

A Contractor shall indemnify and hold harmless the Owner, its employees, and agents, from any and all damages, costs (including, without limitation, legal fees, court costs, and the cost of investigation), judgments or claims by anyone for injury or death of persons resulting from the collapse or failure of trenches constructed under this Contract

B Contractor acknowledges and agrees that this indemnity provision provides indemnity for the Owner in case the Owner is negligent either by act or omission in providing for trench safety, including, but not limited to safety program and design reviews, inspections, failures to issue stop work orders, and the hiring of the Contractor

PART 2 P R O D U C T S - NOT USED

PART 3 E X E C U T I O N

3 01 INSTALLATION

A Install and maintain trench safety systems in accordance with provisions of OSHA 29CFR

B Install specially designed trench safety systems shall be installed in accordance with the Contractor's trench excavation safety program for the locations and conditions identified in the program. Install Special Shoring at the locations shown on the Drawings

C Obtain verification from a competent person, as identified in the Contractor's trench excavation safety program, that trench boxes and other pre-manufactured systems are certified for the actual installation conditions

3 02 INSPECTION

A Conduct daily inspections by Contractor or Contractor's independently retained consultant, of the trench safety systems to ensure that the installed systems and operations meet OSHA 29CFR and other personnel protection regulations requirements

B If evidence of possible cave-ins or slides is apparent, Contractor shall immediately stop work in the trench and move personnel to safe locations until necessary precautions have been taken to safeguard personnel

C Contractor shall maintain a permanent record of daily inspections Upon request, the Contractor shall supply to Owner a copy of these records

3 03 FIELD QUALITY CONTROL

A Verify specific applicability of the selected or specially designed trench safety systems to each field condition encountered on the project

END OF SECTION

SECTION 01563

CONTROL OF GROUND WATER AND SURFACE WATER

PART 1 GENERAL

1.01 SECTION INCLUDES

A Dewatering, depressurizing, draining, and maintaining trench and structure excavations and foundation beds in dry and stable condition.

B Protecting work against surface runoff and rising flood waters

C Disposing of removed water

1 02 METHOD OF PAYMENT

A Subsurface investigation and groundwater control plan preparation and monitoring shall be incidental to the project and shall include subsurface investigation to identify groundwater conditions, design, install, operate, maintain, and monitor ground water control systems

B No separate payment will be made for control of ground water and surface water except for well pointing and piezometer Include the cost to control ground water and surface water in unit price for work requiring such controls. Dewatering required for the removal of standing water, surface drainage seepage, or to protect against rising waters or floods shall be considered incidental to work

C Well pointing shall be paid by the linear foot and measured along the centerline of the utility installed regardless if well pointing is required on one or both sides of the trench

D Pizometers and environmental monitoring wells, if required, shall be paid for by the unit of each.

1 03 DEFINITIONS

A Ground water control includes both dewatering and depressurization of water-bearing soil layers

1 Dewatering includes lowering the water table and intercepting seepage which would otherwise emerge from slopes or bottoms of excavations and disposing of removed water The intent of dewatering is to increase stability of excavated slopes, prevent dislocation of material from slopes or bottoms of excavations, reduce lateral loads on sheeting and bracing, improve excavating and hauling characteristics of excavated material, prevent failure or heaving of

the bottom of excavations, and to provide suitable conditions for placement of backfill materials and construction of structures and other installations

2 Depressurization includes reduction in piezometric pressure within strata not controlled by dewatering alone, as required to prevent failure or heaving of excavation bottom

B Excavation drainage includes keeping excavations free of surface and seepage water

C Surface drainage includes use of temporary drainage ditches and dikes and installation of temporary culverts and sump pumps with discharge lines as required to protect the Work from any source of surface water

D. Equipment and instrumentation for monitoring and control of the ground water control system includes piezometers and monitoring wells, and devices, such as flow meters, for observing and recording flow rates

1.04 PERFORMANCE REQUIREMENTS

A Conduct subsurface investigations to identify groundwater conditions and to provide parameters for design, installation, and operation of groundwater control systems

B Design a ground water control system, compatible with requirements of Federal Regulations 29 CFR Part 1926 and Section 01526 - Trench Safety Systems, to produce the following results

1 Effectively reduce the hydrostatic pressure affecting excavations

2 Develop a substantially dry and stable subgrade for subsequent construction operations

3 Preclude damage to adjacent properties, buildings, structures, utilities, installed facilities, and other work

4 Prevent the loss of fines, seepage, boils, quick condition, or softening of the foundation strata

5 Maintain stability of sides and bottom of excavations

C Ground water control systems may include single-stage or multiple-stage well point systems, eductor and ejector-type systems, deep wells, or combinations of these equipment types

D Provide drainage of seepage water and surface water, as well as water from any other source entering the excavation. Excavation drainage may include placement of drainage materials, such as crushed stone and filter fabric, together with sump pumping

E Provide ditches, berms, pumps and other methods necessary to divert and drain surface water from excavation and other work areas

F Locate ground water control and drainage systems so as not to interfere with utilities, construction operations, adjacent properties, or adjacent water wells

G Assume sole responsibility for ground water control systems and for any loss or damage resulting from partial or complete failure of protective measures and any settlement or resultant damage caused by the ground water control operations. Modify ground water control systems or operations if they cause or threaten to cause damage to new construction, existing site improvements, adjacent property, or adjacent water wells, or affect potentially contaminated areas Repair damage caused by ground water control systems or resulting from failure of the system to protect property as required.

H Provide an adequate number of piezometers installed at the proper locations and depths as required to provide meaningful observations of the conditions affecting the excavation, adjacent structures, and water wells

I Provide environmental monitoring wells installed at the proper locations and depths as required to provide adequate observations of hydrostatic conditions and possible contaminant transport from contamination sources into the work area or into the ground water control system

J Decommission piezometers and monitoring wells installed during design phase studies and left for Contractors monitoring and use.

K Contractor is responsible for determining the path for the flow of the diverted water Further, Contractor shall obtain any easements and permits required for the path and follow all local, state and federal requirements, including requirements for erosion control Path shall direct water to the bay if possible instead of ocean side of the island

1.05 SUBMITTALS

A Submittals shall conform to all sections and provisions of these contract documents

B Submit a Ground Water and Surface Water Control Plan for review by the Owner's Representative prior to start of any field work Submit a plan to include the following

1 Results of subsurface investigation and description of the extent and characteristics of water bearing layers subject to ground water control

2 Names of equipment suppliers and installation subcontractors

3 A description of proposed ground water control systems indicating arrangement, location, depth and capacities of system components, installation details and criteria, and operation and maintenance procedures

4. A description of proposed monitoring and control system indicating depths and locations of piezometers and monitoring wells, monitoring installation details and criteria, type of equipment and instrumentation with pertinent data and characteristics

5. A description of proposed filters including types, sizes, capacities and manufacturer's application recommendations.

6 Design calculations demonstrating adequacy of proposed systems for intended applications Define potential area of influence of ground water control operation near contaminated areas

7 Operating requirements, including piezometric control elevations for dewatering and depressurization.

8 Excavation drainage methods including typical drainage layers, sump pump application and other necessary means

9 Surface water control and drainage installations.

10 Proposed methods and locations for disposing of removed water

C Submit the following records upon completed initial installation

1 Installation and development reports for well points, eductors, and deep wells.

2 Installation reports and baseline readings for piezometers and monitoring wells.

3 Baseline analytical test data of water from monitoring wells

4 Initial flow rates

D Submit the following records on a weekly basis during operations

1 Records of flow rates and piezometric elevations obtained during monitoring of dewatering and depressurization Refer to Paragraph 3 02, Requirements for Eductor, Well Points, or Deep Wells

2 Maintenance records for ground water control installations, piezometers, and monitoring wells

E Submit the following records at end of work Decommissioning (abandonment) reports for monitoring wells and piezometers installed by other during the design phase and left for Contractor's monitoring and use

1 06 ENVIRONMENTAL REQUIREMENTS

A Comply with requirements of agencies having jurisdiction

B Comply with Texas Commission on Environmental Quality regulations and Texas Water Well Drillers Association for development, drilling, and abandonment of wells used in dewatering system

C Obtain permit from EPA under the Texas Pollutant Discharge Elimination System (TPDES), for storm water discharge from construction sites Refer to Section 01565 TPDES Permit Requirements

D Obtain all necessary permits from agencies with control over the use of groundwater and matters affecting well installation, water discharge, and use of existing storm drains and natural water sources Because the review and permitting process may be lengthy, take early action to pursue and submit for the required approvals

E Monitor ground water discharge for contamination while performing pumping in the vicinity of potentially contaminated sites

F Discharge with high levels of salinity shall be discharge directly to salt water body and shall not be conveyed by surface drainage or open ditch that may kill vegetation

PART 2 P R O D U C T S

2 01 EQUIPMENT AND MATERIALS

A Equipment and materials are at the option of Contractor as necessary to achieve desired results for dewatering Selected equipment and materials are subject to review of the Engineer through submittals

B Eductors, well points, or deep wells, where used, must be furnished, installed and operated by an experienced contractor regularly engaged in ground water control system design, installation, and operation

C All equipment must be in good repair and operating order

D Sufficient standby equipment and materials shall be kept available to ensure continuous operation, where required

E When well-pointing in residential areas, utilize noise reducing pumps and said pumps must be approved by the Owner.

PART 3 EXECUTION

3 01 GROUND WATER CONTROL

A Perform a subsurface investigation by borings as necessary to identify water bearing layers, piezometric pressures, and soil parameters for design and installation of ground water control systems Perform pump tests, if necessary to determine the drawdown characteristics of the water bearing layers The results shall be presented in the Ground Water and Surface Water Control Plan (See Paragraph 1 05B 1)

B Provide labor, material, equipment, techniques and methods to lower, control and handle ground water in a manner compatible with construction methods and site conditions Monitor effectiveness of the installed system and its effect on adjacent property

C Install, operate, and maintain ground water control systems in accordance with the Ground Water and Surface Water Control Plan Notify Owner's Representative in writing of any changes made to accommodate field conditions and changes to the Work Provide revised drawings and calculations with such notification

D Provide for continuous system operation, including nights, weekends, and holidays Arrange for appropriate backup if electrical power is primary energy source for dewatering system

E Monitor operations to verify that the system lowers ground water piezometric levels at a rate required to maintain a dry excavation resulting in a stable subgrade for prosecution of subsequent operations

F Where hydrostatic pressures in confined water bearing layers exist below excavation, depressurize those zones to eliminate risk of uplift or other instability of excavation or installed works Allowable piezometric elevations shall be defined in the Ground Water and Surface Water Control Plan

G Maintain water level below subgrade elevation Do not allow levels to rise until foundation concrete has achieved design strength

H During backfilling, dewatering may be reduced to maintain water level a minimum of 5 feet below prevailing level of backfill However, do not allow that water level to result in uplift pressures in excess of 80 percent of downward pressure produced by weight of structure or backfill in place Do not allow water levels to rise into cement stabilized sand until at least 48 hours after placement

I Provide a uniform diameter for each pipe drain run constructed for dewatering

J. Extent of construction ground water control for structures with a permanent perforated underground drainage system may be reduced, such as for units designed to withstand hydrostatic uplift pressure Provide a means of draining the affected

portion of underground system, including standby equipment Maintain drainage system during operations and remove it when no longer required.

K Remove system upon completion of construction or when dewatering and control of surface or ground water is no longer required

L Backfill all well-pointed holes

M. Compact backfill to not less than 95 percent of the maximum dry density in accordance with ASTM D698

3 02 REQUIREMENTS FOR EDUCTOR, WELL POINTS, OR DEEP WELLS

A For aboveground piping in ground water control system, include a 12-inch minimum length of clear, transparent piping between every eductor well or well point and discharge header so that discharge from each installation can be visually monitored

B Install sufficient piezometers or monitoring wells to show that all trench or shaft excavations in water bearing materials are predrained prior to excavation Provide separate piezometers for monitoring of dewatering and for monitoring of depressurization Install piezometers and monitoring wells for tunneling as appropriate for Contractor's selected method of work

C Install piezometers or monitoring wells not less than one week in advance of beginning the associated excavation as required in Contractor's best judgment

D Dewatering may be omitted for portions of underdrains or other excavations, but only where auger borings and piezometers or monitoring wells show that soil is predrained by an existing system such that the criteria of the ground water control plan are satisfied.

E. Replace installations that produce noticeable amounts of sediments after development

F Provide additional ground water control installations, or change the methods, in the event that the installations according to the ground water control plan does not provide satisfactory results based on the performance criteria defined by the plan and by the specification. Submit a revised plan. No separate pay for the additional plan

3 03 MAINTENANCE AND OBSERVATION

A Conduct daily maintenance and observation of piezometers or monitoring wells while the ground water control installations or excavation drainage are operating in an area Keep system in good condition

B Replace damaged and destroyed piezometers or monitoring wells with new piezometers or wells as necessary to meet observation schedule

C Cut off piezometers or monitoring wells in excavation areas where piping is exposed, only as necessary to perform observation as excavation proceeds. Continue to maintain and make observations, as specified

D Remove and grout piezometers inside or outside the excavation area when ground water control operations are complete. Remove and grout monitoring wells when directed by the Owner's Representative

3 04 MONITORING AND RECORDING

A Monitor and record average flow rate of operation for each deep well, or for each wellpoint or eductor header used in dewatering system. Also monitor and record water level and ground water recovery These records shall be obtained daily until steady conditions are achieved, and twice weekly thereafter

B Observe and record elevation of water level daily as long as ground water control system is in operation, and weekly thereafter until the Work is completed or piezometers or wells are removed, except when Owner's Representative determines that more frequent monitoring and recording are required Comply with Owner's Representative's direction for increased monitoring and recording and take measures as necessary to ensure effective dewatering for intended purpose

3 05 SURFACE WATER CONTROL

A Intercept surface water and divert it away from excavations through use of dikes, ditches, curb walls, pipes, sumps or other approved means The requirement includes temporary works required to protect adjoining properties from surface drainage caused by construction operations

B. Divert surface water and seepage water into sumps and pump it into drainage channels or storm drains, when approved by agencies having jurisdiction Provide settling basins when required by such agencies

END OF SECTION

SECTION 02051

ABANDONMENT OF SANITARY SEWERS

PART 1 GENERAL

1 01 SECTION INCLUDES

A Abandonment in place of existing sanitary sewers, manholes, and force mains

1 02 UNIT PRICES

A Measurement for grout fill and abandonment of existing gravity sewers is on a linear foot basis for each diameter of sewer being abandoned Measurement will be along the centerline of the sewer from centerline to centerline of manholes

B Measurement for grout fill and abandonment of sanitary sewer manholes is by each manhole abandoned in conformance with this Section

C Payment will be full compensation for all material, equipment, and labor required for complete abandonment grouting, including air venting, testing, temporary plugs, pipes and all incidentals

D No separate payment will be made for plugging and abandoning sanitary sewer force mains Include the cost of such abandonment in related work

E Acceptability of grout material is based on achieving an average strength of at least 75 as defined in Paragraph 2 01B 1

1 03 DEFINITIONS

A Abandonment Sanitary sewer abandonment consists of demolition and removal of any portion of manholes existing within the specified depth of the surface, and the abandonment in place of sewer lines and manholes as specified in this Section

B Flowable Fill Flowable fill (abandonment grout) shall be a controlled low-strength material consisting of a fluid mixture of cement, fly ash, aggregate, water and with admixtures as necessary to provide workable properties Placement of flowable fill may be by grouting techniques in sewer pipes or other restricted areas, or as mass placement by chutes or tremie methods in unrestricted locations with open access The long-term hardened strength shall be within a specified range

C Ballast Large aggregate either replaced with the voids subsequently filled with flowable fill injected by grouting method, or in areas with open access, placed individually and sequentially at the same time as the flowable fill placement

D Backgrouting. A secondary stage pressure grouting to ensure that voids have been filled within the abandoned sewer Back grouting will only be required at critical locations indicated on the Drawings or if there is evidence of incomplete flowable fill placements

1 04 SUBMITTALS

A Submittals shall conform to requirements of all sections and provisions of these specifications

B Flowable fill mix design report·

1 Flowable fill type and production method.

2 Use of ballast Provide percentage of ballast of the total placement and size limits for the ballast if fill is intended to be used with ballast

3 Aggregate gradation of fill The aggregate gradation of the mix (excluding ballast) shall be used as a pilot curve for quality control during production

4 Fill mix constituents and proportions including materials by weight and volume, and air content but excluding ballast Give types and amounts of admixtures including air entrainment or air generating compounds.

5. Fill densities and viscosities, including wet density at the point of placement

6 Initial time of set

7 Bleeding and shrinkage

8 Compressive strength

C Technical information for equipment and operational procedures including projected slurry injection rate, grout pressure, method of controlling grout pressure, bulkhead and vent design, and number of stages of grout application

D. Experience record for the proposed crew, showing a minimum of 5 similar projects using the proposed or similar equipment and methods

E At least 60 days prior to commencing any abandonment activities, submit a plan for abandonment, describing the proposed grouting sequence, bypass pumping requirements and plugging, if any, and other information pertinent to completion of the work

PART 2 P R O D U C T S

2 01 FLOWABLE FILL

A Design Mix Criteria Provide design of one or more mixes to meet the design criteria and conditions for placement Present the information required by Paragraph 1.05B in the mix design report including the following

1 Cement. ASTM C150 Type I or II. Volume and weight per cubic yard of fill Provide minimum cement content of 100 pounds per cubic yard.

2 Fly ash ASTM C618 Class C or F Volume and weight per cubic yard of fill Provide minimum Fly ash content of 200 pounds per cubic yard

3 Potable water Volume and weight per cubic yard of fill Amount of water determined by mix design testing

4 Aggregate gradation 100 percent passing the 3/8 inch sieve and not more than 10 percent passing the #200 sieve The mix design report shall define a pilot gradation based on the following sieve sizes 3/8-inch, Nos 4, 8, 16, 30, 50, 100 and 200 Do not deviate from the pilot gradation by more than +/-10 percentage points for any sieve for the production material

5 Aggregate source material Screened or crushed aggregate, pit or bank run fine gravels or sand, or crushed concrete If crushed concrete is used, at least 30 percent of natural aggregate shall be added as necessary to provide workability

6 Admixtures· Use admixtures meeting ASTM C494 and ASTM C107 as needed to improve pumpability, to control time of set, and reduce bleeding

7 Fluidifier· Use a fluidifier meeting ASTM C397 as necessary to hold the solid constituents in suspension Add a shrinkage compensator if necessary.

8 Performance additive Use a flowable fill performance additive, such as Darafill or approved equal, to control the fill properties

B Flowable Fill Requirements

1 Unconfined compressive strength. minimum 75 psi at 56 days as determined based on an average of three tests for the same placement Present at least three acceptable strength tests for the proposed mix design in the mix design report

2 Placement characteristics self-leveling.

3. Shrinkage characteristics non-shrink.

4 Water bleeding for fill to be placed by grouting method in sewers not to exceed 2 percent according to ASTM C940

5 Minimum wet density 90 pounds per cubic foot

2 02 BALLAST

A Ballast material· natural rock or concrete pieces with a minimum size equal to at least 10 times the maximum aggregate size of the flowable fill and a maximum size of 24 inches The maximum dimension shall not be more than 20 percent of the minimum dimension of the space to be filled

B Ballast composition free of any regulated waste material

2 03 PLUGS FOR FORCE MAINS

A Grout Plugs Cement-based dry-pack grout conforming to ASTM C1107, Grade B or C

B Manufactured Plug Commercially available plug or cap specifically designed and manufactured to be used with the pipe being abandoned

PART 3 E X E C U T I O N

3.01 PREPARATION

A Have fill mix design reports and other submittals required by Paragraph 1 05 accepted by the Engineer prior to start of placement Notify the Engineer at least 24 hours in advance of grouting with flowable fill

B. Select fill placement equipment and follow procedures with sufficient safety and care to avoid damage to existing underground utilities and structures Operate equipment at a pressure that will not distort or imperil any portion of the work, new or existing

C Clean sewer lines and video with closed circuit television to identify connections, locate obstructions, and assess the condition of the pipe. Locate previously unidentified connections, which have not been redirected and reconnected as a part of this project, and report them to the Engineer During placement of the fill, compensate for any irregularities in the sewer pipe, such as obstructions, open joints, or broken pipe to ensure no voids remain unfilled

D Perform demolition work prior to starting fill placement Clean placement areas of sewers and manholes of debris that may hinder fill placement Remove excessive amounts of sludge and any other substances that may degrade performance of the fill Do not leave sludge or other debris in place if filling more than 2 percent of the

placement volume Dispose of waste material in compliance with Section 01500 - Temporary Facilities and Controls

E. Remove free water prior to starting fill placement.

3 02 EQUIPMENT

A Mix flowable fill in an automated batch plant and deliver it to the site in ready-mix trucks Performance additives may be added at the placement site if required by mix design

B Use concrete or grout pumps capable of continuous delivery at the planned placement rate

3 03 DEMOLITION OF ABANDONED SANITARY SEWER MANHOLES, PIPELINE STRUCTURES AND FORCE MAINS PRIOR TO ABANDONMENT

A Remove manhole frames and covers and any castings from other existing pipeline structures Deliver these castings to the Owner's storage yard. Alternatively, salvaged castings may be used upon approval by the Engineer for construction of new manholes on this project

B Demolish and remove precast concrete adjustment rings and corner section, or brick and mortar corbel and chimney, or other pipeline structure, to a minimum depth of 4 feet below finished grade The structure may be removed to a greater depth, but not deeper than 18 inches above the crown of the abandoned sewer

C If the adjacent sewer lines are not to be filled, place temporary plugs in each line connecting to the manhole in preparation for filling the manhole.

D Excavate overburden from force mains to be abandoned at the locations indicated on the Drawings Cut the existing force main, if necessary, to provide an end surface perpendicular to the axis of the pipe and suitable for the plug to be installed Remove any force main piping material remaining outside of the segment to be abandoned

3 04 INSTALLATION

A Abandon sewer lines by completely filling the sewer line with flowable fill Abandon manholes and other structures by filling with flowable fill, together with ballast as applicable, within the depth of structures left in place

B Place flowable fill to fill the volume between the manholes as completely as practicable Continuously place flowable fill from manhole to manhole with no intermediate pour points, but not exceeding 500 feet in length.

C Have the filling operation performed by experienced crews with equipment to monitor density of the flowable fill and to control pressure

D Temporarily plug sewer lines which are to remain in operation during pouring/pumping to keep the lines free of flowable fill

E Pump flowable fill through bulkheads constructed for placement of two 2-inch PVC pipes or use other suitable construction methods to contain the flowable fill in the lines to be abandoned These pipes will act as injection points or vents for placement of flowable fill

F Place flowable fill under pressure flow conditions into a properly vented open system until flowable fill emerges from the vent pipes Pump flowable fill with sufficient pressure to overcome friction and to fill the sewer from the downstream end, to discharge at the upstream end

G Inject flowable fill through replaced ballast using grouting equipment and a series of grout pipes discharging at the bottom of the placement, allowing the fill to rise through the ballast effectively filling all voids Alternatively, sequentially place individual pieces of ballast at the same time as flowable fill is placed Do not fill with ballast more than 50 percent of the volume at any level to prevent nesting and void formation

H Remediate placement of flowable fill which does not fill voids in a sewer, in manhole or other structures, or where voids develop due to excessive shrinkage or bleeding of the fill by using pressure grouting either from inside the sewer or from the surface

I. Plug each end of force mains being abandoned

J Force main abandonment

1 Clean the inside surface of force mains at least 12 inches from the ends, as necessary, to achieve a firm bond and seal the grout plug or manufactured plug to the pipe surface Similarly, clean and prepare the exterior pipe surface if a manufactured cap is to be used

2. When using a grout plug, place a temporary plug or bulkhead approximately 12 inches inside the pipe Fill the pipe end completely with dry-pack grout mixture

3 When using a manufactured plug or cap, install the fitting, as recommended by the manufacturer's instructions, to form a watertight seal

K. Backfill to the surface, above the pipe or structures left in place, with flowable fill in restricted areas, compacted bank run sand in unrestricted areas to be paved or select

fill in unrestricted areas outside of pavement Place and compact backfill, other than flowable fill, in compliance with these specifications.

L Collect and dispose of excess flowable fill material and other debris in accordance with all sections of these specifications

3 05 FIELD QUALITY CONTROL

A. Provide batch plant tickets for each truck delivery of flowable fill Note on the tickets addition of admixtures at the site

B Check flow characteristics and workability of the fill as the placement proceeds

C Obtain at least three test cylinders for each placement area for determination of 56 day compressive strength and bleeding The acceptance of the placement will be based on the average strength of the three tests

D. Record the volume of ballast together with the flowable fill placement for the same space to demonstrate that voids have been filled

3 06 PROTECTION OF PERSONS AND PROPERTY

A Provide safe working conditions for employees throughout demolition and removal operations. Observe safety requirements for work below grade

B Maintain safe access to adjacent property and buildings Do not obstruct roadways, sidewalks or passageways adjacent to the work

END OF SECTION

SECTION 02227

EXCAVATION AND BACKFILL FOR UTILITIES

PART 1 GENERAL

1 01 SECTION INCLUDES

A Excavation, trenching, foundation, embedment, and backfill for installation of utilities

1 02 UNIT PRICES

A No additional payment will be made for trench excavation, embedment and backfill Include payment in the unit price for applicable bid items

B No separate or additional payment will be made for surface water control, or for excavation drainage. Include payment in the unit price for applicable bid items

1 03 DEFINITIONS

A Pipe Foundation Suitable and stable native soils that are exposed at the trench subgrade after excavation to depth of bottom of the bedding as shown on the Drawings, or foundation backfill material placed and compacted in over-excavations.

B Pipe Bedding. The portion of trench backfill that extends vertically from top of foundation up to a level line at bottom of pipe, and horizontally from one trench sidewall to opposite sidewall.

C Haunching The material placed on either side of pipe from top of bedding up to springline of pipe and horizontally from one trench sidewall to opposite sidewall

D Initial Backfill· The portion of trench backfill that extends vertically from springline of pipe (top of haunching) up to a level line 12 inches above top of pipe, and horizontally from one trench sidewall to opposite sidewall

E Pipe Embedment The portion of trench backfill that consists of bedding, haunching and initial backfill

F Trench Zone The portion of trench backfill that extends vertically from top of pipe embedment up to pavement subgrade or up to final grade when not beneath pavement

G Unsuitable Material· Unsuitable soil materials are the following·

1 Materials that are classified as ML, CL-ML, MH, PT, OH and OL according to ASTM D 2487.

2 Materials that cannot be compacted to required density due to either gradation, plasticity, or moisture content

3 Materials that contain large clods, aggregates, stones greater than 4 inches in any dimension, debris, vegetation, waste or any other deleterious materials.

4 Materials that are contaminated with hydrocarbons or other chemical contaminants.

H Suitable Material Suitable soil materials are those meeting specification requirements Unsuitable soils meeting specification requirements for suitable soils after treatment with lime or cement are considered suitable, unless otherwise indicated

I Backfill Suitable material meeting specified quality requirements, placed and compacted under controlled conditions

J Ground Water Control Systems. Installations external to trench, such as well points, eductors, or deep wells Ground water control includes dewatering to lower ground water, intercepting seepage which would otherwise emerge from side or bottom of trench excavation, and depressurization to prevent failure or heaving of excavation bottom. Refer to Section 01563 - Control of Ground Water and Surface Water

K Surface Water Control Diversion and drainage of surface water runoff and rain water away from trench excavation Rain water and surface water accidentally entering trench shall be controlled and removed as a part of excavation drainage

L Excavation Drainage Removal of surface and seepage water in trench by sump pumping and using a drainage layer, as defined in ASTM D 2321, placed on the foundation beneath pipe bedding or thickened bedding layer of Class I material

M Trench Conditions are defined with regard to the stability of trench bottom and trench walls of pipe embedment zone Maintain trench conditions that provide for effective placement and compaction of embedment material directly on or against undisturbed soils or foundation backfill, except where structural trench support is necessary

1 Dry Stable Trench· Stable and substantially dry trench conditions exist in pipe embedment zone as a result of typically dry soils or achieved by ground water control (dewatering or depressurization) for trenches extending below ground water level

2 Stable Trench with Seepage· Stable trench in which ground water seepage is controlled by excavation drainage

a Stable Trench with Seepage in Clayey Soils Excavation drainage is provided in lieu of or to supplement ground water control systems to control seepage and provide stable trench subgrade in predominately clayey soils prior to bedding placement

b Stable Wet Trench in Sandy Soils Excavation drainage is provided in the embedment zone in combination with ground water control in predominately sandy or silty soils

3 Unstable Trench Unstable trench conditions exist in the pipe embedment zone if ground water inflow or high water content causes soil disturbances, such as sloughing, sliding, boiling, heaving or loss of density

N Subtrench Subtrench is a special case of benched excavation Subtrench excavation below trench shields or shoring installations may be used to allow placement and compaction of foundation or embedment materials directly against undisturbed soils Depth of a subtrench depends upon trench stability and safety as determined by the Contractor

O Trench Dam A placement of low permeability material in pipe embedment zone or foundation to prohibit ground water flow along the trench.

P Over-Excavation and Backfill· Excavation of subgrade soils with unsatisfactory bearing capacity or composed of otherwise unsuitable materials below top of foundation as shown on Drawings, and backfilled with foundation backfill material

Q Foundation Backfill Materials· Natural soil or manufactured aggregate of controlled gradation, and geotextile filter fabrics as required, to control drainage and material separation Foundation backfill material is placed and compacted as backfill to

provide stable support for bedding Foundation backfill materials may include concrete seal slabs

R. Trench Safety Systems include both Protective Systems and Shoring Systems as defined in Section 01526 - Trench Safety Systems.

S Trench Shield (Trench Box). A portable worker safety structure moved along the trench as work proceeds, used as a Protective System and designed to withstand forces imposed on it by cave-in, thereby protecting persons within the trench. Trench shields may be stacked if so designed or placed in a series depending on depth and length of excavation to be protected

T Shoring System A structure that supports sides of an excavation to maintain stable soil conditions and prevent cave-ins, or to prevent movements of the ground affecting adjacent installations or improvements

1 04 SCHEDULING

A. Schedule work so that pipe embedment can be completed on the same day that acceptable foundation has been achieved for each section of pipe installation, manhole, or other structures.

1 05 SUBMITTALS

A Submittals shall conform to the requirements of all provisions and sections of these specifications.

B Submit a written description for information only of the planned typical method of excavation, backfill placement and compaction, including

1 Sequence of work and coordination of activities
2. Selected trench widths
3 Procedures for foundation and embedment placement, and compaction
4 Procedure for use of trench boxes and other premanufactured systems while assuring specified compaction against undisturbed soil
5 Procedure for installation of Special Shoring at locations identified on the Drawings

C Submit a ground and surface water control plan in accordance with requirements in this Section and Section 01563 - Control of Ground Water and Surface Water

D Submit backfill material sources and product quality information in accordance with requirements of Section 02229 - Utility Backfill Materials.

E. Submit a trench excavation safety program in accordance with requirements of Section 01526 - Trench Safety System. Include designs for special shoring meeting the requirements defined in Paragraph 1.03 of Section 01526

F Submit record of location of utilities as installed, referenced to survey control points Include locations of utilities encountered or rerouted Give stations, horizontal dimensions, elevations, inverts, and gradients

1.06 TESTS

A Perform backfill material source qualification testing in accordance with requirements of Section 02229 - Utility Backfill Materials.

B. Testing and analysis of backfill materials for soil classification and compaction during construction will be performed by an independent laboratory provided by the Owner in accordance with requirements of Section 01410 - Testing Laboratory Services and as specified in this Section

1 07 PROTECTION

A Protect trees, shrubs, lawns, existing structures, and other permanent objects outside of grading limits and within the grading limits as designated on the Drawings, and in accordance with requirements of Section 01535 - Tree and Plant Protection

B. Protect and support above-grade and below-grade utilities which are to remain.

C. Restore damaged permanent facilities to pre-construction conditions unless replacement or abandonment of facilities are indicated on the Drawings

1 08 SPECIAL SHORING DESIGN REQUIREMENTS

A Have Special Shoring designed or selected by the Contractor's Professional Engineer to provide support for the sides of the excavations, including soils and hydrostatic ground water pressures as applicable, and to prevent ground movements affecting adjacent installations or improvements such as structures, pavements and utilities Special shoring may be a premanufactured system selected by the Contractors Professional Engineer to meet the project site requirements based on the manufacturer's standard design

PART 2 P R O D U C T S

2 01 EQUIPMENT

A Perform excavation with hydraulic excavator or other equipment suitable for achieving the requirements of this Section

B. Use only hand-operated tamping equipment until a minimum cover of 12 inches is obtained over pipes, conduits, and ducts. Do not use heavy compacting equipment until adequate cover is attained to prevent damage to pipes, conduits, or ducts

C Use trench shields or other Protective Systems or Shoring Systems which are designed and operated to achieve placement and compaction of backfill directly against undisturbed native soil

D Use Special Shoring systems where required which may consist of braced sheeting, braced soldier piles and lagging, slide rail systems, or other systems meeting the Special Shoring design requirements

2.02 MATERIAL CLASSIFICATIONS

A Embedment and Trench Zone Backfill materials Conform to the classifications and product descriptions of Section 02229 - Utility Backfill Materials.

B. Concrete Backfill Conform to requirements for Class B concrete as specified in the pertinent Section

C. Geotextile (Filter Fabric). Conform to requirements of Section 02249 - Geotextile

D. Concrete for Trench Dams Concrete backfill or 3 sack premixed (bag) concrete

E Timber Shoring Left in Place Untreated oak

PART 3 EXECUTION

3 01 STANDARD PRACTICE

A Install flexible pipe, including "semi-rigid" pipe, to conform to standard practice described in ASTM D 2321, and as described in this Section. Where an apparent conflict occurs between the standard practice and the requirements of this Section, this Section governs.

B Install rigid pipe to conform with standard practice described in ASTM C 12, and as described in this Section. Where an apparent conflict occurs between the standard practice and the requirements of this Section, this Section governs

3.02 PREPARATION

A Establish traffic control to conform with requirements of Section 01570 - Traffic Control and Regulation. Maintain barricades and warning lights for streets and intersections where Work is in progress or where affected by the Work, and is considered hazardous to traffic movements.

B Perform Work to conform with applicable safety standards and regulations. Employ a trench safety system as specified in Section 01526 - Trench Safety Systems

C Immediately notify the agency or company owning any existing utility line which is damaged, broken, or disturbed. Obtain approval from the Owner's Representative and agency for any repairs or relocations, either temporary or permanent

D Remove existing pavements and structures, including sidewalks and driveways, to conform with requirements of Section 02076 - Removing Existing Pavements and Structures, as applicable

E Install and operate necessary dewatering and surface water control measures to conform with Section 01563 - Control of Ground Water and Surface Water

F Maintain permanent benchmarks, monumentation, and other reference points Unless otherwise directed in writing, replace those which are damaged or destroyed in accordance with Section 01050 - Field Surveying

G PREPARATION. Complete, as incidental to construction, site preparation work including clearing and grubbing; removal and disposal of trash, rubbish, debris, and minor obstacles to construction; relocation of savable items, stripping topsoil within excavation areas, stockpiling topsoil, and, after construction, spreading topsoil over disturbed areas as required and finishing and grading surface within construction areas

H Perform a Potential Conflict Investigation at all critical locations Locate existing utilities ahead of pipe laying activities Notify Owner's Representative in writing immediately upon identification of any conflict. In the event, Contractor will not be entitled to extra cost for downtime including, but not limited, payroll, equipment, overhead demobilization and remobilization

3.03 EXCAVATION

A Except as otherwise specified or shown on the Drawings, install underground utilities in open cut trenches with vertical sides

B Perform excavation work so that pipe, conduit, and ducts can be installed to depths and alignments shown on the Drawings Avoid disturbing surrounding ground and existing facilities and improvements Excavate trench so that pipe is centered in trench Do not obstruct sight distance for vehicles utilizing roadways or detours with stockpiled materials

C Determine trench excavation widths using the following schedule (as a minimum) as related to pipe outside diameter (O.D.) Or as shown on the drawings Maximum trench width shall be the minimum trench width plus 24 inches.

Nominal Pipe Size, Inches	Minimum Trench Width, Inches
Less than 18	O.D. + 18
18 to 30	O D + 24
Greater than 30	O D + 36

D Use sufficient trench width or benches above the embedment zone for installation of well point headers or manifolds and pumps where depth of trench makes it uneconomical or impractical to pump from the surface elevation Provide sufficient space between shoring cross braces to permit equipment operations and handling of forms, pipe, embedment and backfill, and other materials

E Upon discovery of unknown utilities, badly deteriorated utilities not designated for removal, or concealed conditions, discontinue work at that location Notify the Owner's Representative and obtain instructions before proceeding

F Shoring of Trench Walls

1 Install Special Shoring in advance of trench excavation or simultaneously with the trench excavation, so that the soils within the full height of the trench excavation walls will remain fully laterally supported at all times

2 For all types of shoring, support trench walls in the pipe embedment zone throughout the installation Provide trench wall supports sufficiently tight to prevent washing the trench wall soil out from behind the trench wall support

3 Unless otherwise directed by the Engineer, leave sheeting driven into or below the pipe embedment zone in place to preclude loss of support of foundation and embedment materials Leave rangers, walers, and braces in place as long as required to support sheeting, which has been cut off, and the trench wall in the vicinity of the pipe zone

4 Employ special methods for maintaining the integrity of embedment or foundation material. Before moving supports, place and compact embedment to sufficient depths to provide protection of pipe and stability of trench walls As supports are moved, finish placing and compacting embedment

5 If sheeting or other shoring is used below top of the pipe embedment zone, do not disturb pipe foundation and embedment materials by subsequent removal Maximum thickness of removable sheeting extending into the embedment zone 1 inch Fill voids left on removal of supports with compacted backfill material

G Use of Trench Shields When a trench shield (trench box) is used as a worker safety device, the following requirements apply

1 Make trench excavations of sufficient width to allow shield to be lifted or pulled freely, without damage to the trench sidewalls

2. Move trench shields so that pipe, and backfill materials, after placement and compaction, are not damaged nor disturbed, nor the degree of compaction reduced
3 When required, place, spread, and compact pipe foundation and bedding materials beneath the shield. For backfill above bedding, lift the shield as each layer of backfill is placed and spread Place and compact backfill materials against undisturbed trench walls and foundation
4 Maintain trench shield in position to allow sampling and testing to be performed in a safe manner

H. Cover

1 Provide 24 in Minimum cover over top of pipe where surface grades are definitely established and 30 in in other locations
2 Greater depth of cover may be necessary on vertical curves or to provide necessary clearance beneath pipes, conduits, drains, drainage structures or other obstructions encountered at normal pipe grades
3. For water mains, provide 4 ft minimum cover unless noted otherwise.
4 Measure depth of backfill cover vertically from top of pipe to finish ground or pavement surface elevations

I Trenching

1 Excavation for pipe stubs to be laid transversely across streets may be made with trench hoe
2 Where surface or underground obstructions make excavation inaccessible to trenching machine, trench hoe may be used
3 Where trench hoe is used, do not use excavated material composed of large chunks and clods for backfill.
4. No excavated material will be stockpiled along trench or on paved surfaces Load excavated material into dump truck as trench is excavated.
5 Topsoil excavated from the trench shall be returned to trench to be used as backfill material for the top 12 inches of the trench
6 For trench excavations requiring cement stabilized sand backfill to subgrade of pavement, stockpiling of cement stabilized sand on pavement is not permitted

J Voids under paving area outside shield will require removal of pavement, consolidation and replacement of pavement in accordance with Contract Documents Repair damage resulting from failure to provide adequate supports

K Place sand or soil behind shoring or trench shield to prevent soil outside shoring from collapsing and causing voids under pavement Immediately pack suitable material in outside voids following excavation to avoid caving of trench walls

L Do not use excavators with side cutters installed while working within 15 feet of pipeline company's pipeline. Use a small, rubber-tired excavator, such as a backhoe, to do exploratory excavation Bucket that is used to dig in close proximity to pipelines shall not have teeth or shall have a guard installed over teeth to approximate a bucket without teeth Excavate by hand within 1 foot of pipeline company's line Do not use larger excavation equipment normally used to dig water main trench in vicinity of pipeline until all pipelines have been uncovered and fully exposed Do not place large excavation and hauling equipment directly over pipelines unless approved by pipeline company's representative

M Regrade adjacent ground surfaces where surfaces have been disturbed during construction operations to original and matching grades

N Trees and shrubs designated to remain that sustain cutting or injury to roots, trunk , or limbs shall be pruned by a tree surgeon and cut or injury painted with asphaltic horticultural coating without cost to Owner

O Perform repair on pipe in locations shown on plans/specifications.

P Where pipe is to be installed in fill, complete area fill and compaction to an elevation not less than 1 ft above top of pipe before open-cut excavation and trenching for pipe

Q Excavate adequate but not excessive working space and clearances for installation of work and form removal

R Allow not less than 6 in clearance in horizontal dimensions of excavations for outside plastering of manholes and similar structures constructed of masonry units

S Do not undercut excavation faces for extended footings of structures

T Excavate by hand within 2 ft of existing utility to remain

U BLASTING Use of explosions will not be permitted

V UNAUTHORIZED EXCAVATION. Refill excavation below subgrade elevations with tamped sand, gravel, cement stabilized sand, or concrete

3 04 HANDLING EXCAVATED MATERIALS

A Use only excavated materials which are suitable as defined in this Section and conforming with Section 02229 - Utility Backfill Materials Place material suitable for backfilling in stockpiles at a distance from the trench to prevent slides or cave-ins

B When required, provide additional backfill material conforming with requirements of Section 02229 - Utility Backfill Materials.

C Do not place stockpiles of excavated materials on streets and adjacent properties Maintain site conditions in accordance with Section 01500 - Temporary Facilities and Controls

D Dispose of unsuitable excavated materials off-site in legal manner

E. Excess excavated material shall become the property of the contractor to be disposed of off-site in a legal manner

3.05 GROUND WATER CONTROL

A Implement ground water control according to Section 01563 - Control of Ground Water and Surface Water Provide a stable trench to allow installation in accordance with the Specifications

3 06 TRENCH FOUNDATION

A Excavate bottom of trench to uniform grade to achieve stable trench conditions and satisfactory compaction of foundation or bedding materials

B Place trench dams in Class I foundations in line segments longer than 100 feet between manholes, and not less than one in every 300 feet of pipe placed. Install additional dams as needed to achieve workable construction conditions Do not place trench dams closer than 5 feet from manholes

C Where rock or other incompressible material is encountered, remove material to depth 6 in below subgrade and backfill with tamped sand, gravel, or concrete

D Reinforce trench bottoms or subgrade surfaces for concrete structures which are solid, but which become mucky on top due to construction operations with specified sand.

E. Use only tamped sand, gravel, or concrete to bring fills to lines and grades indicated and for replacing unsatisfactory materials

3 07 PIPE EMBEDMENT PLACEMENT AND COMPACTION

A Immediately prior to placement of embedment materials, the bottoms and sidewalls of trenches shall be free of loose, sloughing, caving, or otherwise unsuitable soil

B Place geotextile to prevent particle migration from the in-situ into open-graded (Class I) embedment materials or drainage layers

C Place embedment including bedding, haunching and initial backfill to meet requirements indicated on Drawings

D For pipe installation, manually spread embedment materials around the pipe to provide uniform bearing and side support when compacted. Do not allow materials to free-fall from heights greater than 24 inches above top of pipe Perform placement and compaction directly against the undisturbed soils in the trench sidewalls, or against sheeting which is to remain in place.

E Do not place trench shields or shoring within height of the embedment zone unless means to maintain the density of compacted embedment material are used If moveable supports are used in embedment zone, lift the supports incrementally to allow placement and compaction of the material against undisturbed soil

F Do not damage coatings or wrappings of pipes during backfilling and compacting operations When embedding coated or wrapped pipes, do not use crushed stone or other sharp, angular aggregates

G Place haunching material manually around the pipe and compact it to provide uniform bearing and side support If necessary, hold small-diameter or lightweight pipe in place during compaction of haunch areas and placement beside the pipe with sand bags or other suitable means

H Place electrical conduit directly on foundation without bedding

I Shovel pipe embedment material in place and compact it using pneumatic tampers in restricted areas, and vibratory-plate compactors or engine-powered jumping jacks in unrestricted areas. Compact each lift before proceeding with placement of the next lift.

1 Class I embedment materials
   a. Maximum 6-inches compacted lift thickness
   b Systematic compaction by at least two passes of vibrating equipment Increase compaction effort as necessary to effectively embed the pipe to meet the deflection test criteria
   c. Moisture content as determined by Contractor for effective compaction without softening the soil of trench bottom, foundation or trench walls
2 Class II embedment and cement stabilized sand
   a Maximum 6-inches compacted thickness.
   b Compaction by methods determined by Contractor to achieve a minimum of 95 percent of the maximum dry density as determined according to ASTM D 698 for Class II materials and according to ASTM D 558 for cement stabilized materials
   c Moisture content of Class II materials within 3 percent of optimum as determined according to ASTM D 698 Moisture content of cement stabilized sands on the dry side of optimum as determined according to ASTM D 558 but sufficient for effective hydration

J Place trench dams in Class I embedments in line segments longer than 100 feet between manholes, and not less than one in every 500 feet of pipe placed Install additional dams as needed to achieve workable construction conditions Do not place trench dams closer than 5 feet from manholes

3 08 TRENCH ZONE BACKFILL PLACEMENT AND COMPACTION

A Place backfill for pipe or conduits and restore surface as soon as practicable Leave only the minimum length of trench open as necessary for construction

B Where damage to completed pipe installation work is likely to result from withdrawal of sheeting, leave the sheeting in place Cut off sheeting 1.5 feet or more above the crown of the pipe Remove trench supports within 5 feet from the ground surface

C For sewer pipes, use backfill materials described here as determined by trench limits As trench zone backfill in paved areas for streets and to one foot back of curbs and pavements, use cement stabilized sand for pipe of nominal sizes less than 36 inches, or bank run sand for pipe of nominal sizes 36 inches and larger or as indicated on the Drawings Uniformly backfill trenches partially within limits one foot from streets and curbs according to the paved area criteria Use select backfill within one foot below pavement subgrade for rigid pavement. For asphalt concrete or limestone roadway, use flexible base material within one foot below pavement subgrade

D For water lines, backfill in trench zone, including auger pits, with bank run sand, select fill material as specified in Section 02229 - Utility Backfill materials

E For trench excavations under pavement, place trench zone backfill in lifts and compact by methods indicated below or as stated on the plans Fully compact each lift before placement of the next lift.

1 Bank run sand.
   - a Maximum 9-inches compacted lift thickness
   - b Compaction by vibratory equipment to a minimum of 95 percent of the maximum dry density determined according to ASTM D 698.
   - c Moisture content within 3 percent of optimum determined according to ASTM D 698

2 Cement-stabilized sand
   - a Place backfill in 8 in. maximum layers to achieve uniform placement and required compaction.
   - b Compaction by vibratory equipment to a minimum of 95 percent of the maximum dry density determined according to ASTM D 558
   - c Moisture content on the dry side of optimum determined according to ASTM D 558 but sufficient for cement hydration

3 Select fill

a Maximum 6-inches compacted thickness

b Compaction by equipment providing tamping or kneading impact to a minimum of 95 percent of the maximum dry density determined according to ASTM D 698

c Moisture content within 2 percent of optimum determined according to ASTM D 698.

d. Add backfill material as necessary where backfill settled below ground surface

F. Do not backfill with wet, mucky, or unsuitable materials or with large rocks or clods of material

G. Trench backfill above pipe embedment shall conform to requirements for type and location of pipe as shown on the drawing

H Place backfill material to minimum depth 12 in. above pipe before ceasing backfilling operations for day

I Base Material Backfill for Patching of Existing Pavement Provide 12 in of base material

J Flooding of backfill for compaction (water tamping) is not acceptable Obtain compaction by mechanical means which allows access to all areas of backfill

3 09 MANHOLES, JUNCTION BOXES AND OTHER PIPELINE STRUCTURES

A Meet the requirements of adjoining utility installations for backfill of pipeline structures, as shown on the Drawings

3.10 FIELD QUALITY CONTROL

A. Test for material source qualifications as defined in Section 02229 - Utility Backfill Materials

B Provide excavation and trench safety systems at locations and to depths required for testing and retesting during construction

C Laboratory Quality Control by Contractor.

1 Establish optimum moisture-maximum density curve for bedding and backfill material, ASTM D 698
   a For those soils which will not exhibit a well defined moisture-density relationship, determine maximum and minimum index densities of the soil, ASTM D4253 and D4254, for calculation of the relative density of the soil in the field
2 Establish optimum moisture-maximum density curve, ASTM D 698, Atterberg Limits, ASTM D 4318, and sieve analysis, ASTM D 422 for the following
   a Borrow bedding and backfill material to be used
   b Excavated material of questionable suitability for use as bedding and backfill material
3 One optimum moisture-maximum density curve, ASTM D 698, shall be established for each significant change in materials
4. Bedding and backfill materials which do not meet specified requirements shall be replaced with suitable materials.

D Field Quality Control by Owner
1 Laboratory density testing of trench backfill
   a One field in-place density test per 500 linear ft of trench for each fill layer
   b One field in-place density test per 150 linear ft. of trench for each fill layer under existing or proposed paved areas and at least one test per fill layer at each road crossing
2 Laboratory density testing of general fill. One field in-place density test per 100 cu. yds of fill placed
3 Field in-place density tests shall be in compliance with ASTM D 1556, ASTM D 2922, or ASTM D 2167

E. Submit minimum 10 lb Samples of any borrow bedding and backfill material to be used to materials testing laboratory

F Recondition, recompact, and retest at Contractor's expense if tests indicate Work does not meet specified compaction requirements For hardened soil cement with nonconforming density, core and test for compressive strength at Contractor's expense

G Acceptability of crushed rock compaction will be determined by inspection

3.11 DISPOSAL OF EXCESS MATERIAL

A Dispose of excess materials in accordance with requirements of Section 01564 - Waste Material Disposal.

3 12 POTENTIAL OBSTRUCTION INVESTIGATION

A Horizontal and vertical location of various underground lines shown on Drawings, including but not limited to water mains, gas lines, storm sewers, sanitary sewers, telephone lines, electric lines or power ducts, pipelines (petrochemical or petroleum product), concrete and debris, are based on best information available but are only approximate locations At critical locations field verify horizontal and vertical locations of such lines within a zone 2 feet vertically and 4 feet horizontally of proposed main Verify location of existing utilities prior to commencing construction Use extreme caution and care when uncovering these lines Any damage to known or unknown utilities or obstructions occurring during Potential Obstruction Investigation will be full responsibility of Contractor No separate payment shall be made for performing such efforts

B. Prior to actual field verification phase, notify all utility companies involved and request that their respective utility lines be marked in field. If any utility or pipeline company requires their line be excavated, or exposed prior to construction, comply with that request and utilize a methodology approved by the said company in locating or exposing their lines Provide Owner's Representative with 48 hours notice prior to any field excavation or related work

C Once known, unknown or potential obstructions have been uncovered, survey vertical and horizontal locations relative to project baseline and datum and plot on 11" X 17" copy of Drawings

D Submit 11" X 17" copy of Drawing with plotted utility or obstruction location titled Potential Obstruction Report to Owner's Representative before or simultaneous with pipe shop drawing submittal

E Owner's Representative will promptly review Potential Obstruction Report and approve construction of proposed main as designed or modify design if necessary Contractor will be promptly notified of any design modifications

END OF SECTION

SECTION 02228

EXTRA UNIT PRICE WORK FOR EXCAVATION AND BACKFILL

PART 1 GENERAL

1 01 SECTION INCLUDES

A Measurement and payment applicable to extra Work items required for utility installations which are identified in the Proposal Form, and which have been authorized in advance by the Owner's Representative and made necessary by unusual or unforeseen circumstances encountered during utility excavation.

1 02 UNIT PRICES

A. Special excavation. Measurement for special excavation is on a cubic yard basis, measured in place, without deduction for space occupied by portions of pipes, ducts, or other structures left in place across trenches excavated under this item

1 Cost for item shall include

a Dewatering and surface water control

b Protection of pipes, ducts, or other structures encountered including bracing, shoring, and sheeting necessary for support

c Replacement of pipes, ducts, or structures damaged by special excavation operations, except where payment for replacement is authorized by Owners Representative due to deteriorated condition of pipes, ducts, or structure

d Temporary disconnecting, plugging, and reconnecting of low volume water pipes, to allow machine excavation or augering, when approved by Engineer Pipe for replacement shall be new and conform to specification requirements for type of existing pipe removed

e Resodding required for surface restoration within designated limits of special excavation

f. Disposal of excess excavated material not suitable for bedding or backfill, or not required for the Project

2 Include cost for following items in payment for applicable Division 2 Sections.

a Trench safety system including sheeting and shoring

b Utility piping installed in trenches excavated under this item

c Removal and replacement of associated streets, driveways, and sidewalks

B. Extra hand or machine excavation Measurement for extra hand excavation is on a cubic yard basis, measured in place

1. Cost for item shall include

a Dewatering and surface water control

b Disposal of excess excavated material not suitable for bedding or backfill, or not required for the Project.

2 Include cost for placement of extra hand excavation in payment for Extra Work Bid Item for Extra Placement of Material

3 Include cost for following items in payment for applicable Division 2 Sections

a Trench safety system including sheeting and shoring

b Removal and replacement of associated streets, driveways, and sidewalks

C. Extra placement of material

1 Measurement for extra placement of material is on a cubic yard basis, measured in place At the discretion of Engineer, measurement of cubic yards may be calculated from the volume of Extra Hand Excavation or Extra Machine Excavation for which placement is made, minus the volume of any Extra Placement of Special Backfill authorized in conjunction with the Work

2 Cost for this item shall include resodding required for surface restoration within designated limits of Extra Hand Excavation or Extra Machine Excavation

D Extra placement of special excavation

1 Measurement for extra placement of special material is on a cubic yard basis, measured in place.

2 Cost for this item shall include geotextile material and concrete trench dams required to complete the placement of special material conforming to the Specifications

E. No payment will be made for delays in completion of Work resulting from extra unit price Work

F Refer to Section 01025 - Measurement and Payment for unit price procedures

1.03 DEFINITIONS

A. Special excavation Excavation necessitated by obstruction of pipes, ducts, or other structures, not shown on Drawings, which interfere with installation of utility piping by normal methods of excavation or augering. Contractor shall be responsible for locating such underground obstructions, sufficiently in advance of trench excavation or augering, to preclude damage to the obstructions

B Extra hand excavation Excavation by manual labor at locations designated by the Owner Representative, which is not included in, or is incidental to, bid items contained in the Schedule of Unit Prices

C. Extra machine excavation· Excavation by machine at locations designated by the Owner Representative, which is not included in, or is incidental to, bid items contained in the Schedule of Unit Prices

D Extra replacement of material· Handling, backfill, and compaction of excavated material authorized under Extra Work Bid Items for Extra Hand Excavation or Extra Machine Excavation Placement and compaction shall conform to requirements specified in appropriate Division 2 Sections

E Extra placement of special backfill· Hauling, placing, and consolidating of special materials in conjunction with Extra Work Bid Item Extra Replacement of Material at locations designated by the Owner's Representative Materials placed under this item shall conform to requirements for Bank Run Sand, Cement Stabilized Sand, Concrete Sand, Pea Gravel, Gem Sand, or Crushed Stone specified in Division 2 Sections

PART 2 P R O D U C T S - NOT USED

PART 3 E X E C U T I O N - NOT USED

END OF SECTION

SECTION 02229

UTILITY BACKFILL MATERIALS

PART 1 GENERAL

1.01 SECTION INCLUDES

A Material Classifications

B Utility Backfill Materials

1 Concrete sand

2 Gem sand

3 Pea gravel

4 Crushed stone

5 Crushed concrete

6. Bank run sand

7 Select backfill

8 Random backfill.

C Material handling and quality control requirements.

1 02 UNIT PRICES

A No payment will be made for backfill material unless specifically listed in the Proposal Form Include payment in unit price for applicable utility installation

B Measurement for backfill material, when included as a separate pay item, is on a cubic yard basis for material placed and compacted within theoretical trench width limits and thickness of material according to Drawing details.

C Measurement for backfill of authorized over-excavation is in accordance with Section 02228 - Extra Unit Price Work for Excavation and Backfill

D Refer to Section 01025 - Measurement and Payment for unit price procedures

1 03 DEFINITIONS

A Backfill· Suitable material meeting specified quality requirements for the designated application as embedment or trench zone backfill.

B Embedment Material placed under controlled conditions within the embedment zone extending vertically upward from top of foundation to an elevation 12 inches above top of pipe, and including pipe bedding, haunching and initial backfill.

C. Trench Zone Backfill· Material meeting specified quality requirements and placed under controlled conditions in the trench zone from top of embedment zone to base course in paved areas or to the surface grading material in unpaved areas

D Foundation Either suitable soil of the trench bottom, or material placed as backfill of over-excavation for removal and replacement of unsuitable or otherwise unstable soils

E Source· A source selected by the Contractor for supply of embedment or trench zone backfill material A selected source may be the project excavation, off-site borrow pits, commercial borrow pits, or sand and aggregate production or manufacturing plants

F. Refer to Section 02227 - Excavation and Backfill for Utilities, for other definitions regarding utility installation by trench construction.

1.04 SUBMITTALS

A Conform to requirements of all sections and provisions of these specifications.

B Submit a description of source, material classification and product description, production method, and application of backfill materials

C Submit test results for samples of off-site backfill materials to comply with Paragraph 3 03, Material Quality Control

D Identify off-site sources for backfill materials at least 14 days ahead of intended use so that the Owner's Representative may obtain samples for verification testing

E Before stockpiling materials, submit a copy of temporary easement or approval from landowner for stockpiling backfill material on private property

1.05 TESTS

A Perform tests of sources for backfill material in accordance with Paragraph 3 03A of this section

B Verification tests of backfill materials may be performed by the Owner in accordance with Section 01410 - Testing Laboratory Services and in accordance with Paragraph 3 03B of this section

C Random fill obtained from the Project excavation as source is exempt from prequalification requirements by Contractor, but must be inspected for unacceptable materials based on ASTM D 2488

PART 2 P R O D U C T S

2 01 MATERIAL CLASSIFICATIONS

A Materials for backfill shall be classified for the purpose of quality control in accordance with the Unified Soil Classification Symbols as defined in ASTM D 2487 Material use and application is defined in utility installation specifications and Drawings either by class, as described in Paragraph 2 01B, or by product descriptions, as given in Paragraph 2 02 of this section.

B Class Designations Based on Laboratory Testing

1 Class I Well graded sands and gravels, gravel-sand mixtures, crushed well graded rock, little or no fines (GW, SW)

a Plasticity Index· Nonplastic

b Gradation: D_{60}/D_{10} - greater than 4 percent Amount passing No 200 Sieve - less than or equal to 5 percent

2. Class II· Poorly graded gravels and sands, silty sands and gravels, little to moderate fines (GM, GP, SP, SM)

a Plasticity Index Nonplastic to 4

b Gradation (GP, SP) Amount passing No 200 Sieve - less than 5 percent

c Gradation (GM, SM) Amount passing No 200 Sieve - between 12 percent and 50 percent

3 Class III Clayey gravels and sands, poorly graded mixtures of sand, gravel, and clay (GC, SC)

a. Plasticity Index. greater than 7

b Gradation. Amount passing No. 200 Sieve - between 12 percent and 50 percent

4 Class IV Lean clays (CL)

a Plasticity Index greater than 7

b Liquid Limit· less than 50

c Gradation Amount passing No 200 Sieve - greater than 50 percent

d Inorganic

5 Use soils with dual class designation according to ASTM D 2487 according to the more restrictive class

2.02 PRODUCT DESCRIPTIONS

A Soils classified as silt (ML), silty clay (CL - ML with PI of 4 to 7), elastic silt (MH), organic clay and organic silt (OL, OH), and organic matter (PT) are not acceptable as backfill materials These soils may be used for site grading and restoration in unimproved areas as approved by Owner's Representative. Soils classified as fat clay (CH) may be used as backfill materials where allowed by the applicable backfill installation specification Refer to Section 02226 - Excavation and Backfill for Structures and Section 02227 - Excavation and Backfill for Utilities

B Provide backfill material that is free of stones greater than 3 inches, free of roots, waste, debris, trash, organic material, unstable material, non-soil matter, hydrocarbon or other contamination, conforming to the following limits for deleterious materials.

1 Clay lumps· Less than 0 5 percent for Class I, and less than 2.0 percent for Class II, when tested in accordance with ASTM C 142

2 Lightweight pieces Less than 5 percent when tested in accordance with ASTM C 123

3 Organic impurities No color darker than standard color when tested in accordance with ASTM C 40.

C Manufactured materials may be substituted for natural soil or rock products where indicated in the product specification, and approved by Owner's Representative, provided that the physical property criteria are determined to be satisfactory by testing

D Bank Run Sand Durable bank run sand classified as SP, SW, or SM by the Unified Soil Classification System (ASTM D 2487) meeting the following requirements·

1 Less than 15 percent passing the number 200 sieve when tested in accordance with ASTM C 136 The amount of clay lumps or balls not exceeding 2 percent.

2 Material passing the number 40 sieve shall meet the following requirements when tested in accordance with ASTM D 4318

a Liquid limit not exceeding 25

b Plasticity index not exceeding 7.

E Concrete Sand. Natural sand, manufactured sand, or a combination of natural and manufactured sand conforming to the requirements of ASTM C 33 and graded within the following limits when tested in accordance with ASTM C 136·

Sieve	Percent Passing
3/8"	100
No 4	95 to 100
No 8	80 to 100
No 16	50 to 85
No 30	25 to 60
No 50	10 to 30
No 100	2 to 10

F Gem Sand Sand conforming to the requirements of ASTM C 33 for course aggregates specified for number 8 size and graded within the following limits when tested in accordance with ASTM C 136

Sieve	Percent Passing
3/8"	95 to 100
No. 4	60 to 80
No 8	15 to 40

G. Pea Gravel Durable particles composed of small, smooth, rounded stones or pebbles and graded within the following limits when tested in accordance with ASTM C 136

Sieve	Percent Passing
2"	100
3/8"	85 to 100
No 4	10 to 30
No. 8	0 to 10
N0 16	0 to 5

H Crushed Aggregates All crushed aggregates consist of durable particles obtained from an approved source and meeting the following requirements

1 All materials of one product delivered for the same construction activity from a single source.

2 Non-plastic fines.

3. Los Angeles abrasion test wear not exceeding 40 percent when tested in accordance with ASTM C 131

4. Gradations, as determined in accordance with TEX-110-E

Sieve	Percent Passing by Weight for Pipe Embedment By Ranges of Nominal Pipes Sizes		
	>15"	15" – 8"	<8"
1"	95 – 100	100	-
3/4"	60 – 90	90 – 100	100
1/2"	25 – 60	-	90 – 100
3/8"	-	20 – 55	40 – 70
No 4	0 – 5	0 – 10	0 - 15
No 8	-	0 – 5	0 - 5

5 Crushed stone· Produced from oversize quarried aggregate, sized by crushing from a naturally occurring single source. Crushed gravel or uncrushed gravel are not acceptable materials for utility embedment.

6 Crushed Concrete Crushed concrete is an acceptable substitute for crushed stone as utility backfill Gradation and quality control test requirements are the same as crushed stone Provide crushed concrete produced from normal weight concrete of uniform quality, containing particles of aggregate and cement material, free from other substances such as asphalt, base course material, reinforcing steel fragments, soil, debris, or deteriorated concrete fragments

I Select Backfill. Class III clayey gravel or sand or Class IV lean clay with a plasticity index between 7 and 20 or clayey soils treated with lime in accordance with Section 02570 - Pavement Repair and Resurfacing, to meet plasticity criteria

J Random Backfill Any suitable soil or mixture of soils within Classes I, II, III and IV, or fat clay (CH) where allowed by the applicable backfill installation specification. Refer to Section 02226 - Excavation and Backfill for Structures and Section 02227 - Excavation and Backfill for Utilities

K Cement Stabilized Sand. Conform to requirements of Section 02252 - Cement Stabilized Sand

L Concrete Backfill· Conform to Class B concrete as specified in Section 03305 - Concrete for Utility Construction or Section 03310 - Concrete for Structures

M Pavement Restoraton Conform to requirements of Section 02570 - Pavement Repair and Resurfacing.

PART 3 EXECUTION

3 01 SOURCES

A. Use of material encountered in the trench excavations is acceptable, provided applicable specification requirements are satisfied If excavation material is not acceptable, provide from other source.

B Obtain approval for each material source by the Owner's Representative before delivery is started If sources previously approved do not produce uniform and satisfactory products, furnish materials from other approved sources All materials may be subjected to inspection or additional verification testing after delivery Materials which do not meet the requirements of the specifications will be rejected Do not use material which, after approval, has become unsuitable for use due to segregation, mixing with other materials, or by contamination. Once a material is approved by the Owner's Representative, expense for sampling and testing required to change to a different material will be credited to the Owner through a change order

C Bank run sand, select backfill, and random backfill, if available in the Project excavation, may be obtained by selective excavation and acceptance testing Obtain additional quantities of these materials and other materials required to complete the work from off-site sources

D The Owner does not represent or guarantee that any soil found in the excavation work will be suitable and acceptable as backfill material

3 02 MATERIAL HANDLING

A When backfill material is obtained from either a commercial or non-commercial borrow pit, have that pit opened to expose the vertical faces of the various strata of acceptable material to be used Excavate the material by vertical cuts extending through the exposed strata to achieve uniformity in the product

B Establish temporary stockpile locations for practical material handling and control, and verification testing by the Engineer in advance of final placement Obtain approval from landowner for storage of backfill material on adjacent private property

C When stockpiling backfill material near the Project site, use appropriate covers to eliminate blowing of materials into adjacent areas and prevent runoff containing sediments from entering the drainage system

D Place stockpiles in layers to avoid segregation of processed materials Load material by making successive vertical cuts through entire depth of stockpile

3 03 MATERIAL QUALITY CONTROL

A Ensure that material selected, produced and delivered to the Project meets applicable specifications and is of sufficient uniform properties to allow practical construction and quality control Responsibilities include.

1. Source or Supplier Qualification Perform testing, or obtain representative tests by suppliers, for selection of material sources and products Provide test results for a minimum of three samples for each source and material type Test samples of processed materials from current production representing material to be delivered Tests shall verify that the materials meet specification requirements Repeat qualification test procedures each time the source characteristic changes or there is a planned change in source location or supplier. Qualification tests shall include, as applicable.

   a Gradation Complete sieve analyses shall be reported regardless of the specified control sieves The range of sieves shall be from the largest particle through the No 200 sieve.

   b. Plasticity

   c Los Angeles abrasion

   d Clay lumps

   e Light weight pieces

   f Organic impurities

2 Production Testing Establish a program to provide assurance that backfill materials delivered from the sources and placed in the Work meet applicable specification requirements Report results to the Owner's Representative

3 Assist the Owner's Representative in obtaining material samples for verification testing at the source or at the production plant

4. Notify the Owner's Representative in the field when non-conforming material is detected

B. Quality Control

1 The Owner's Representative may sample and test backfill at

a Sources including borrow pits, production plants and Contractor's designated off-site stockpiles

b. On-site stockpiles.

c Materials placed in the Work

2 The Owner's Representative may resample material at any stage of work or location if changes in characteristics are apparent

3 The Owner's Representative will notify Contractor at the Project site about non-conforming materials and will, as appropriate, resample materials to verify results

C Tolerances

The following tolerances apply to production quality control testing

1 Embedment Material and Select Backfill· The Owner's Representative may accept material provided that not more than one out of the most recent five consecutive tests are out of the specification limits for.

a Gradation. Not more than 5 percentage points on any individual sieve

b Plasticity· Not more than 2 percentage points

2 Trench Zone Backfill Material Except for select and random backfill, the Owner's Representative may accept the material provided that not more than one out of the most recent three consecutive tests are out of the specification limits for·

a Gradation. Not more than 8 percentage points on any individual sieve.

b Plasticity. Not more than 5 percentage points

3	Select and Random Backfill· No quantified tolerances conforming material identifiable by visual-manual procedure	Remove non-

END OF SECTION

SECTION 02249

GEOTEXTILE

PART 1 GENERAL

1 01 SECTION INCLUDES

A Geotextile fabric, also called filter fabric, in applications such as a pipe embedment wrap, around the exterior of a tunnel liner, or around the foundations of pipeline structures and slope stabilization

1 02 UNIT PRICES

A No separate payment will be made for work performed under this Section Include the cost of such work in unit prices for work requiring geotextile, such as pipe embedment, sewer line in tunnel, or placement of manhole foundations, as appropriate

1 03 SUBMITTALS

A Submittals shall conform to the requirements of all sections and provisions of these specifications

B Submit the standard manufacturer's catalog sheets and other pertinent information, for approval, prior to installation.

C Submit installation methods, as a part of the work plan for tunneling or for excavation and backfill for utilities Obtain approval from Owner's Representative for geotextile material and the proposed installation method prior to use of the geotextile

PART 2 PRODUCTS

2 01 GEOTEXTILE

A. Provide a geotextile (filter fabric) designed for use in geotechnical applications which forms a permeable layer or media while retaining the soil matrix.

B Use a fabric which meets the physical requirements for Class A Subsurface Drainage installation conditions as defined in AASHTO M288 and as specified in paragraph 2 02

2 02 PROPERTIES

A Material· Nonwoven, nonbiodegradable, fabric consisting only of continuous chain polymer filaments or yarns, at least 85 percent by weight polyolefins, polyesters or polyamide, formed into a dimensionally stable network

B Chemical Resistance· Inert to commonly encountered chemicals and hydrocarbons over a pH range of 3 to 12.

C Physical Resistance. Resistant to mildew and rot, ultraviolet light exposure, insects and rodents.

D Minimum Test Values

Property	Value (Min)	Test Method
Grab Strength	180 lbs	ASTM D 4632
Trapezoidal Tear Strength	50 lbs	ASTM D 4533
Puncture Strength	80 lbs	ASTM D 4833
Mullen Burst Strength	290 psi	ASTM D 3786
Apparent Opening Size[1]	0 25 mm	ASTM D 4751
Permittivity (sec ^{1})	0 2	ASTM D 4491

[1]Maximum average roll value

PART 3 E X E C U T I O N

3 01 LINE WORK

A Use geotextile with backfill for utilities in conformance with Section 02227 - Excavation and Backfill for Utilities

3 02 TUNNEL WORK

A Use geotextile outside of a tunnel primary liner to prevent the migration of soil fines into the excavated tunnel resulting in voids or settlement Conform to Section 02310 - Tunnel Excavation and Primary Liner Select a geotextile, subject to the minimum

requirements of Paragraph 2 02, meeting tunnel liner design requirements and installation conditions.

END OF SECTION

SECTION 02317

AUGERING PIPE FOR WATER LINES

PART 1 GENERAL

1.01 SECTION INCLUDES

A Installing water service pipe by methods of augering

1 02 UNIT PRICES

A Augered pipe will be measured along the axis of the pipe and shall include fittings In the case of a branch pipe, the length of the pipe will be considered as the distance from the axis of the line to the end of the branch The length of the pipe laid between two lines or from a line to an appurtenance will be measured between the centerlines of each

B. Auger pits and other excavations are incidental to the work Trench Safety for Auger Pits and other excavations for work specifically performed for this section shall be included in Section 01526 - Trench Safety

C No separate payment will be made for pavement removal and replacement (i e , lime stabilization, crushed limestone, hot mix asphalt surface course, cement sand base, and concrete pavement, etc) associated with augering

D If open-cut construction is requested by Contractor for his convenience in areas designated for augering, and if approved in advance by the Owner's Representative, such areas shall be paid for at the Contract Unit Price for open cut construction Payment includes necessary surface restoration and pavement repair

1 03 SUBMITTALS

A Submit product data in accordance with requirements of all sections and provisions of these specifications

B Submit product data for casing insulators for approval

C Prior to commencement of work, furnish for the Owner's Representative's approval, a plan showing pit locations Approval of this plan will not relieve Contractor from responsibility to obtain specified results

D Show actual pit locations dimensioned on as-built drawings so that they can be identified in field

1 04 REGULATORY REQUIREMENTS

A Conform to Texas Department of Transportation for installations under state highways

B. Installations under railroads.

1 Secure and comply with requirements of right-of-entry for crossing railroad company's easement or right-of-way from railroad companies affected Comply with railroad permit requirements Submit copy to the Owner's Representative

2 Use dry auger method only

3 No extra compensation for damages due to delays caused by the railroad requesting work to be done at hours which will not inconvenience the railroad

4 Maintain minimum 35-foot clearance for bore pits from centerline of tracks, unless approved by railroad company and Owner

PART 2 P R O D U C T S

2 01 MATERIALS

A. Piping and Fittings. As required by Drawings.

B Casings Where required by Drawings, in accordance with Section 02611 - Steel Pipe and Fittings

C Insulators. Where casings are required by Drawings, casing insulator width 8 inches for pipe sizes 4 to 12 inches, 12 inches for pipe sizes 14 to 30 inches or as shown on drawings

D Casing End Seals Provide Pipeline Seal & Insulator Model C or approved equal

PART 3 E X E C U T I O N

3 01 GENERAL

A Do not exceed 100 feet for length of auger hole for PVC pipe less than 12 inches in diameter without intermediate pit, unless shown otherwise on the drawings

B Do not exceed 75 feet for length of auger hole for PVC pipe 12 inches to 16 inches in diameter without intermediate pit, unless shown otherwise on the drawings

C. Do not exceed 40 feet for length of auger hole for PVC pipe greater than 16-inches in diameter without intermediate pit, unless shown otherwise on the drawings.

3 02 PREPARATION

A Conform to applicable provisions of Section 02100 - Right-of-Way Preparation

3 03 TRAFFIC CONTROL

A Conform to applicable provisions of Section 01570 - Traffic Regulation and Control

B. Secure right-of-entry for crossing railroad company's easement or right-of-way.

3 04 JACKING

A Comply with Section 01526 - Trench Safety Systems for all pits, access shafts, end trenches and other excavations relating to work required by this specification

B If grade of pipe at jacking end is below ground surface, excavate suitable pits or trenches for conducting jacking operations and for placing end joints of pipe Wherever end trenches are cut in sides of embankment or beyond it, sheath securely and brace such work to prevent earth caving.

C No more than one joint shall be made-up in pit or trench prior to jacking

D. Construction shall not interfere with operation of railroad, street, highway, or other facility, nor weaken or damage embankment or structure

E During construction operations, furnish and maintain barricades and lights to safeguard traffic and pedestrians as directed by the Owner's Representative, until such time as backfill has been completed and removed from site

F. Provide heavy-duty jacks suitable for forcing pipe through embankment Use suitable jacking head, usually of timber, and suitable bracing between jacks and jacking head and suitable jacking frame or backstop so that jacking pressure will be applied to pipe uniformly around ring of pipe Set pipe to be jacked on guides, properly braced together, to support section of pipe and to direct it in proper line and grade Place jacking assembly in line with direction and grade of pipe Excavate embankment material just ahead of pipe and remove material through pipe Force pipe through embankment with jacks, into space thus provided

G Conform excavation for underside of pipe to contour and grade of pipe, for at least one third of circumference of pipe Provide clearance of not more than 2 inches for upper half of pipe. Taper off upper clearance to zero at point where excavation conforms to contour of pipe

H Distance that excavation shall extend beyond end of pipe depends on character of material, but it shall not exceed 2 feet in any case Decrease distance on instructions from the Owner's Representative, if character of material being excavated makes it desirable to keep advance excavation closer to end of pipe

I Jack pipe from low or downstream end Lateral or vertical variation in final position of pipe from line and grade established by the Owner's Representative will be permitted only to extent of 1 inch in 10 feet, provided such variation is regular and only in one direction and that final grade of flow line is in direction indicated on plans

J Use cutting edge of steel plate around head end of pipe extending short distance beyond end of pipe with inside angles or lugs to keep cutting edge from slipping back onto pipe.

K Once jacking of pipe is begun, carry on without interruption, insofar as practicable, to prevent pipe from becoming firmly set in embankment

L. Remove and replace any pipe damaged in jacking operations

M. Backfill pits or trenches excavated to facilitate jacking operations immediately after completion of jacking of pipe

N Grout annular space when loss of embankment occurs or when clearance of two inches is exceeded

3 05 AUGERING (BORING)

A Auger from approved pit locations Excavate for pits and install shoring as outlined above under "Jacking " Auger mechanically with use of a pilot hole entire length of crossing and check for line and grade on opposite end of bore from work pit The large hole is to be no more than 2 inches larger than diameter of bell Place excavated material outside working pit and dispose of as required Use water or other fluids in connection with boring operation only to lubricate cuttings, jetting will not be permitted

B In unconsolidated soil formations, a gel-forming colloidal drilling fluid may be used Fluid is to consist of at least 10 percent of high-grade processed bentonite and shall consolidate cuttings of bit, seal walls of hole, and shall furnish lubrication for subsequent removal of cuttings and installation of pipe

C Grout annular space when loss of embankment occurs or when clearance of two inches is exceeded

3 06 CASING

A Install casings as required by Drawings, in accordance with this section

3 07 INSULATOR INSTALLATION

A There must be no inadvertent metallic contact between casing and carrier pipe. Spacing of spacers should ensure that carrier pipe is adequately supported throughout its length, particularly at ends, to offset settling and possible electrical shorting. End

spacer must be within 6 inches of end of casing pipe, regardless of size of casing and carrier pipe or type of spacer used Casing spacers are designed to withstand much greater loads than can be safely applied to most coatings. Therefore, spacing between spacers depends largely on load bearing capabilities of pipe coating and flexibility of pipe

B Bottom of trench adjacent to each end of casing should be graded to provide firm, uniform and continuous support for carrier pipe. If trench requires some backfill to establish final trench bottom grade, backfill material should be placed in 6-inch lifts and each layer properly compacted

C Casing spacers should be installed in accordance with manufacturer's instructions Special care should be taken to ensure that all subcomponents are correctly assembled and evenly tightened, and that no damage occurs during tightening of insulators or carrier pipe insertion.

D Annulus between carrier pipe and casing should be sealed with casing end seals at each end of casing

E. Insulator Spacing

1 Spacing shall be as shown on Drawing with maximum distance between spacers to be 10 feet for pipe sizes 4 to 14 inches and 6 feet for pipe sizes 16 to 30 inches

2 If casing or carrier pipe is angled, bent or dented, spacing should be reduced

3 08 PITS

A Locate auger pits where there is minimum interference with traffic or access to property

B Pit Size Provide minimum 6-inch space between pipe and walls of bore pit Maximum allowable width of pit shall be 5 feet unless approved by the Owner's Representative Width of pit at surface shall not be less than at bottom Maximum allowable length of pit shall be no more than 5 feet longer than one full joint of pipe and shall not exceed 25 feet unless approved by the Owner's Representative.

C Excavate bore pits to finished grade at least 6 inches lower than grade indicated by stakes or as approved by the Owner's Representative

D Backfill in accordance with Section 02227

3.09 CLEANUP

A. Conform to applicable provisions of Section 01564 - Waste Material Disposal

3 10 FILLING ANNULAR SPACE

A Allowable variation from line and grade shall be as specified under "Jacking " Block void space around pipe in augered hole with approximately 12 inches of packed clay or similar material approved by the Owner's Representative, to prevent bedding or backfill from entering the void around the pipe in the augered hole when compacted. For pipe diameters 4 inches through 8 inches use minimum 1/2 cubic foot clay for pipe diameters 12 inches through 16 inches use minimum 3/4 cubic foot clay

END OF SECTION

SECTION 02604

VALVE BOXES, METER BOXES, AND METER VAULTS

PART 1 GENERAL

1 01 SECTION INCLUDES

A Valve boxes for water service

B Meter boxes for water service

C Meter vaults for water service

1 02 UNIT PRICES

A No separate payment will be made for valve boxes under this section Include payment in unit price for Section 02640 - Gate Valves

B Measurement for meter vaults is on a lump sum basis or installation of each meter vault type and size. Payment will be made for each vault installed regardless of depth

1 03 SUBMITTALS

A Submittals shall conform to requirements of all section and provisions of these specifications

B Submit manufacturers product data for following items for approval

1 Each type of valve box and lid

2 Each type of meter box and cover

3 Each type of meter vault frame and cover

C. Submit shop drawings for cast-in-place meter vaults for approval if proposed construction varies from Drawings

D Submit manufacturer's certification that plastic meter boxes purchased for Work meet the requirements of paragraph of this Section on Plastic Meter Boxes

PART 2 PRODUCTS

2 01 VALVE BOXES

A Provide Type "A", cast-iron, slide-type, valve boxes. Design of valve box shall minimize stresses on valve imposed by loads on box lid

B Cast a letter "W" into lid, 1/2 inch in height and raised 3/32 inch, for valves serving potable water lines

C Coat boxes, bases, and lids by dipping in hot bituminous varnish

D Provide 6-inch PVC, Class 150, DR 18, riser pipes

E Concrete for valve box placement·

1 For locations in new concrete pavement, use strength and mix design of new pavement

2 For other locations, use class "A" concrete, with minimum compressive strength of 3000 psi, conforming to requirements of Section 03305

2 02 METER BOXES GENERAL

A The Owner will furnish all meter boxes for meters 1 1/2-inch and smaller

2.03 METER VAULTS

A Meter vaults may be constructed of precast concrete, cast-in-place concrete, or solid masonry unless a specific type of construction is required by Drawings

B Concrete for meter vaults Class A concrete, conforming to requirements of Section 03305, with minimum compressive strength of 4000 psi at 28 days

C Reinforcing steel for meter vaults Conform to requirements of Section 03305

D Grates and Covers Conform to requirements of Section 02603

PART 3 E X E C U T I O N

3 01 EXAMINATION

A Obtain approval from the Owner Representative for location of meter vault

B Verify lines and grade are correct

C Verify compacted subgrade will support loads imposed by vaults

3 02 VALVE BOXES

A Provide riser pipe with suitable length for depth of cover indicated on Drawings or to accommodate actual finish grade Install with bell on top of valve

B Install valve box and riser piping plumbed in a vertical position. Provide 6-inches telescoping freeboard space between riser pipe top butt end, and interior contact flange

of valve box, for vertical movement damping Riser may rest on valve flange, or provide suitable footpiece to support riser pipe

C After valve box has been set, aligned, and adjusted so that lid is level with final grade, pour a 24-inch by 24-inch by 8-inch thick concrete block around valve box Center valve box horizontally within concrete block

D Paint covers of new valve boxes in Blue (color approved by owner) when installed. This work is incidental and no separate payment will be made

3 03 METER BOXES

A. Install plastic boxes in accordance with manufacturers instructions

B Construct concrete meter boxes to dimensions shown on Drawings

C Adjust top of meter boxes to conform to cover elevations specified in paragraph of this section for Frame and Cover for Meter Vaults.

D. Do not locate under paved areas unless approved by Owner Representative Use approved traffic-type box with cast iron lid when meter must be located in paved areas

3 04 METER VAULTS

A Construct concrete meter vaults to dimensions and requirements shown on drawings Do not cast in presence of water Make bottom uniform

B. Precast Meter Vaults·

1 Install precast vaults in accordance with manufacturers recommendations Set level on a minimum 3-inch thick bed of sand conforming to the requirements of Section 02251

2 Seal lifting holes cement-sand mortar or non-shrink grout

C Meter Vault Floor Slab

1. Construct floor slabs of 6-inch-thick reinforced concrete Slope floor 1/4 inch per foot toward sump Make sump 12 inches in diameter, or 12 inches square, and 4 inches deep, unless other dimensions are required by Drawings. Install dowels at maximum of 18 inches, center-to-center, or install mortar trench for keying walls to floor slab

2 Precast floor slab elements may be used for precast vault construction

D Cast-in-Place Meter Vault Walls

1 Key walls to floor slab and form to dimensions shown on Drawings Minimum wall thickness shall be 4 inches

2 Cast walls monolithically. One cold joint will be allowed when vault depth exceeds 12 Feet

3 Set frame for cover while concrete is still green

3 05 FRAME AND COVER FOR METER VAULTS

A Set cast iron frame in a mortar bed and adjust elevation of cover as follows

1 In unpaved areas, set top of meter box or meter vault cover 1 to 2 inches above natural grade.

2 In sidewalk areas, set top of meter box or meter vault cover level with adjacent concrete

3.06 BACKFILL

A Provide bank run sand in accordance with Section 02251, and backfill and compact in accordance with Section 02227

B In unpaved areas, slope backfill around meter boxes and vaults to provide a uniform slope 1 to 5 from top to natural grade.

C In sidewalk areas slope concrete down from meter boxes to meet adjacent concrete

END OF SECTION

SECTION 02610

DUCTILE IRON PIPE AND FITTINGS

PART 1 GENERAL

1 01 SECTION INCLUDES

A Ductile iron pipe and fittings for water mains, wastewater force mains, and gravity sanitary sewers

1 02 UNIT PRICES

A No separate payment will be made for ductile iron pipe and fittings under this Section Include cost in unit price for water mains, force mains, gravity sanitary sewers, and storm sewers

1 03 SUBMITTALS

A. Conform to requirements of all sections and provisions of these specifications

B Submit shop drawings showing design of new pipe and fittings indicating alignment and grade, laying dimensions, fabrication, fitting, flange, and special details Show station numbers for pipe and fittings corresponding to Drawings Production of pipe and fittings prior to review by the Owner's Representative is at Contractor's risk.

1 04 QUALITY CONTROL

A Provide manufacturer's certifications that all ductile iron pipe and fittings meet provisions of this Section and have been hydrostatically tested at factory and meet requirements of ANSI A21 51

B Provide certifications that all pipe joints have been tested and meet requirements of ANSI A21 11

PART 2 PRODUCTS

2 01 DUCTILE IRON PIPE

A Ductile iron pipe barrels· ANSI A21 15, ANSI A21 50 or ANSI A21 51, bear mark of Underwriters' Laboratories approval, pressure classes as shown on the Drawings and/or Bid Proposal

B Provide pipe sections in standard lengths, not less than 18 feet long, except for special fittings and closure sections as indicated on shop drawings and/or Bid Proposal

2 02 JOINTS

A. Joint types ANSI A21 11 push-on, ANSI A21.11 mechanical joint, or ANSI A21 15 flanged end Provide push-on joints unless otherwise indicated on the Drawings or required by these specifications For bolted joints, bolts shall conform to requirements of AWWA C111

B Where restrained joints for buried service are required by Drawings, provide Series 1100 (MEGALUG) by EBAA Iron Inc , or equal.

C. Threaded or grooved type joints which reduce pipe wall thickness below minimum required are not acceptable

D. Provide for restrained joints designed to meet test pressures required under Section 02676- Hydrostatic Testing of Pipelines or Section 02731 - Sanitary Sewage Force Mains, as applicable

E Where ductile iron water main is cathodically protected from corrosion, bond rubber gasketed joints as shown on Drawings to provide electrical continuity along entire pipeline, except where insulating flanges are required by Drawings

2 03 GASKETS.

A Furnish, when no contaminant is identified, plain rubber (SBR) gasket material, for flanged joints 1/8-inch thick gasket in accordance with ANSI A21 15

B Pipes to be installed in potentially contaminated areas, especially where free product is found near the elevation of the proposed pipeline, shall have the following gasket materials for the noted contaminants

Contaminant	Gasket Material Required
Petroleum (diesel, gasoline)	Nitrile Rubber
Other contaminants	As recommended by the pipe manufacturer

2 04 FITTINGS

A Use fittings of same size as pipe Reducers are not permitted to facilitate an off-size fitting Reducing bushings are also prohibited. Make reductions in piping size by reducing fittings Line and coat fittings as specified for pipe they serve

B Push-on Fittings will not be allowed

C Flanged Fittings ANSI A21.10, ANSI B16 1 cast or ductile iron Flanges ANSI B16 1, Class 125; pressure rated at 250 psig

D Mechanical Joint Fittings· ANSI A21 10 (AWWA C110), pressure rated at 250 psi

E Ductile Iron Compact Fittings for Water Mains: ANSI A21 53 (AWWA C153), 4-inch through 12-inch diameter, fusion bonded epoxy-lined or cement-mortar lining, conform to requirements of Section 02630 - Polyethylene Wrap.

2 05 COATINGS AND LININGS

A Water Main Interiors. ANSI A21 4, cement lined with seal coat

B. Sanitary Sewer and Force Main Interiors

1 Preparation Commercial blast cleaning conforming to SSPC-SP6

2 Liner thickness Nominal 40 mils, minimum 35 mils, for pipe barrel interior, minimum 6 - 10 mils at gasket groove and outside spigot end to 6-inches back from end

3. Testing· ASTM G62, Method B for voids and holidays, provide written certification

4 Acceptable Lining Materials

a Virgin polyethylene conforming to ASTM D1248, with inert fillers and carbon black to resist ultraviolet degradation during storage heat bonded to interior surface of pipe and fittings, APolyline@ by American Cast Iron Pipe Company, or equal

b Polyurethane Corro-pipe II by Madison Chemicals

c Ceramic Epoxy Protecto-401 by Enduron Protective Coatings.

C Sanitary Sewer Point Repair Pipe For pipes which will be lined with high density polyethylene liner pipe or cured-in-place liner, provide cement-lined with seal coat in accordance with ANSI A21 4 For pipes which will not be provided with named liner, provide pipe as specified in Paragraph 2 05B.

D Exterior·

1 Water Lines

a. Auger Holes Conform to requirements of Section 02629 - Polyurethane Coatings on Steel or Ductile Iron Pipe

b Above Ground (or Exposed) Conform to the following

Provide a 3-coat epoxy/polyurethane coating system as designated below

Surface Preparation	SSPC SP10 Near White Blast Clean 2 0 to 3 0 mils surface profile
Prime Coat 2 0 to 4 0 mils DFT	ACRO 4422 Inhibitive Epoxy Primer, or approved equal
Intermediate Coat 4 0 to 6 0 mils DFT	ACRO 4460 Chemical Resistant Epoxy, or approved equal
Finish Coat 1 5 to 2 0 mils DFT	ACRO 4428 Polyurethane, Or approved equal

c. Total minimum allowable dry film thickness for system. 10 mils

d. All materials shall be from same manufacturer

e Color of paint shall be in accordance with the City's standard

2 Sanitary Sewers· Prime coat and outside asphaltic coating conforming to ANSI A21 10, ANSI A21 15, or ANSI A21 51 for pipe and fittings in open cut excavation and in casings

E Polyethylene Wrap For buried water lines and sanitary sewers, including point repairs, provide polyethylene wrap unless otherwise specified or shown Provide Polyethylene Wrap for all buried ductile iron pipe, including polyurethane coated pipe Conform to requirements of Section 02630 - Polyethylene Wrap

F For flanged joints in buried service, provide petrolatum wrapping system, Denso, or equal, for the complete joint and all alloy steel fasteners Alternatively, provide bolts made of Type 304 Stainless Steel

G Pipe to be installed in potentially contaminated areas shall have coatings and linings recommended by the manufacturer as resistant to the contaminants

2 06 MANUFACTURERS

A Pre-approved manufacturers of ductile iron are American Cast Iron Pipe Co , McWane Cast Iron Pipe Co , and U S Pipe and Foundry Co

PART 3 EXECUTION

3 01 INSTALLATION

A Conform to installation requirements of Sections 02664 - Water Mains, 02730 - Gravity Sanitary Sewers, and 02731 - Sanitary Sewage Force Mains, except as modified in this Section

B Install in accordance with AWWA C600 and manufacturer's recommendations

C Install all ductile iron pipe in polyethylene wrap, unless cathodic protection is provided Do not use polyethylene wrap with a cathodic protection system

D. Holiday Testing

1 Polyurethane Conform to requirements of Section 02629 - Polyurethane Coatings for Steel or Ductile Iron Pipe

2 Fusion Bonded Epoxy Conform to requirements for new fittings in ANSI A21 16

3.02 GRADE

A. Unless otherwise specified on Drawings, install ductile iron pipe for water service to clear utility lines with following minimum cover

Diameter (Inches)	Depth of Cover (Feet)
16 and 24	5
12 and smaller	3 5

3 03 FIELD REPAIR OF COATINGS

A Polyurethane Conform to requirements of Section 02527 - Polyurethane Coatings for Steel or Ductile Iron Pipe

B Fusion Bonded Epoxy· Conform to requirements for new fittings in ANSI A21 16

END OF SECTION

SECTION 02611

STEEL PIPE AND FITTINGS

PART 1 GENERAL

1 01 SECTION INCLUDES

A New steel pipe and fittings for pumping facilities, and casings

1 02 UNIT PRICES

A No payment will be made for steel pipe and fittings under this section Include cost in unit price for water pumping facilities and casings.

1 03 SUBMITTALS

A Submit shop drawings, in accordance with requirements of all sections and provisions of these specifications.

1. For aerial crossings and water plant/facilities, include design of new pipe and fittings indicating alignment and grade, laying dimensions, lining and coating systems, proposed welding procedures, fabrication, fitting, flange, and special details Show station numbers for pipe and fittings corresponding to Drawings

2 Production of pipe and fittings prior to review by the Owner Representative shall be at Contractor's risk

3 Submit manufacturers certification that pipe is new and unused

1 04 QUALITY CONTROL

A Provide manufacturer's certifications that all pipe and fittings have been hydrostatically tested at factory in accordance with AWWA C200, Section 3.4

B Provide manufacturer's affidavits that polyurethane coatings, linings and tape coatings comply with applicable requirements of this section and that coatings were applied and allowed to cure at a temperature 5 degrees above the dew point

C Provide manufacturer's affidavits that mortar coatings and linings comply with applicable requirements of this section and that linings were applied and allowed to cure at a temperature above 32 degrees F

D Prior to work being started, provide proof of certification of qualification for all welders employed for type of work, procedures and positions involved Qualifications shall be in accordance with AWWA C206

PART 2 PRODUCTS

2 01 STEEL PIPE

A Provide steel pipe designed and manufactured in conformance with AWWA C200 and AWWA M11 except as modified herein. Steel shall be minimum of ASTM A 36, ASTM A570 Grade 36, ASTM A 53 Grade B, ASTM A135 Grade B, or ASTM A139 Grade B

B Minimum Allowable Steel-Wall Thickness In accordance with following table for HS-20 live loads and depths of bury of up to 16 feet and AWWA C200 new uncoated welded steel

GENERAL PURPOSE CARBON STEEL PIPE

Casing	Min Wall		Approx Wt Per Lin
Pipe Size	O D	Thick	Ft Unct'd
8"	8 625"	0 219"	19 64
10"	10 750"	0 219"	24 60
12"	12 750"	0 219"	29 28
14"	14 000"	0 219"	32 00
16"	16 000"	0 219"	36 86
20"	20 000"	0 250"	52 73
24"	24 000"	0 250"	63 41
30"	30.000"	0 250"	79 43

CASING PIPE
(ENCASEMENT SLEEVES)

Casing	Min Wall		Approx Wt Per Lin
Pipe Size	O D	Thick	Ft Unct'd.
8"	8 625"	0 219"	19 64
10"	10 750"	0 219"	24 60
12"	12 750"	0 219"	29 28
14"	14 000"	0 219"	32 00
16"	16.000"	0 219"	36 86
20"	20.000"	0 250"	52 73
24"	24.000"	0 250"	63 41
30"	30 000"	0 250"	79 43

C Provide pipe sections in lengths of no less than 20 feet except as required for special fittings or closure sections.

D Fittings. Factory forged for sizes 4 inches through 24 inches, long radius bends, beveled ends for field butt welding, wall thickness equal to or greater than pipe to which fittings is to be welded, unless otherwise shown on the drawings

E Joints.

1 Standard field joint for steel pipe AWWA C206

a Single-welded, lap joint

b Double-welded, butt joint

2 Provide mechanically coupled or flanged joints where required for valves and fittings, and as shown on Drawings Flanges AWWA C207, Class D, same diameter and drilling as Class 125 cast iron flanges ASA B16 1 Maintain electrically isolated flanged joints between steel and cast iron by using epoxy-coated bolts, nuts, washers and insulating type gasket unless otherwise approved by Owner Representative

F Make curves and bends by use of beveled joints unless otherwise indicated on Drawings. Contractor may submit details of other methods of providing curves and bends for consideration by the Owner Representative If other methods are deemed satisfactory, install at no additional cost to Owner

G Provide shop coated and shop lined steel pipe with minimum of one coat of shop applied primer approved for use in potable water transmission on all exposed steel surfaces Primer for tape coated steel pipe to be used for field-applied coatings shall have no less than 5 percent solids Provide primer compatible with coating system and in accordance with coating manufacturer's recommendations

H Standard or Special Sections Within 1/8 inch + of specified or theoretical lengths Flanges Square with pipe with bolt holes straddling both horizontal and vertical axis Provide 1/2-inch gap between pipe ends where pipe is to be coupled with sleeve couplings

2 02 EXTERNAL COATING SYSTEMS FOR BURIED STEEL PIPE

A General Supplied with either tape coatings or cement-mortar coatings as specified herein

1 Tape Coating AWWA C214, 80-mil shop-applied, Polyken YG-III, Tek-Rap Yard-Rap, or equal, except as modified herein Components primer, one 20-mil layer of inner-layer tape for corrosion protection and two 30-mil layers of outer-layer tape for mechanical protection Primer compatible with tape coating, supplied by coating-system manufacturer. Provide pipe with shop coatings cut back from joint ends to facilitate joining and welding of pipe. Taper successive tape layers by 1-inch staggers to facilitate field wrapping of joints Cutback approximately 4 to 4-1/2 inches to facilitate welding Inner and outer tape widths

Diameter	Tape Width
4" – 6"	6"
8" – 12"	9"
14" – 16"	12"
18" – 24"	18"

2 Cement-Mortar Coating AWWA C205, shop-applied, cement-mortar coating except as modified herein, 1-inch minimum thickness, cut back coating from joint ends no more than 2 inches to facilitate joining and welding of pipe

2 03 EXTERNAL COATING SYSTEM FOR STEEL PIPE IN TUNNEL, CASING OR AUGER HOLES

A Provide exterior coating system of pipe in augered holes or casing, without annular grout, as specified in Section 02629, Polyurethane Coatings on Steel or Ductile Iron Pipe No additional exterior coating is required for mortar coated pipe

2 04 EXTERNAL COATING SYSTEM FOR STEEL PIPE INSTALLED ABOVEGROUND (OR EXPOSED)

A Provide a 3-coat epoxy/polyurethane coating system as designated below

Surface Preparation	SSPC SP10 Near White Blast Clean 2 0 to 3 0 mils surface profile
Prime Coat 2 0 to 4.0 mils DFT	
Intermediate Coat 4 0 to 6 0 mils DFT	
Finish Coat 1 5 to 2 0 mils DFT	

B Total minimum allowable dry film thickness for system· 10 mils

C. All materials shall be from same manufacturer.

2 05 INTERNAL LINING SYSTEMS FOR STEEL PIPE

A General Supply steel pipe with either epoxy lining or shop applied cement mortar lining, capable of conveying water at temperatures not greater than 140EF All linings shall conform to American National Standards Institute/National Sanitation Foundation (ANSI/NFS) Standard 61 and certified by an organization accredited by ANSI. Unless otherwise noted, coat all exposed (wetted) steel parts of flanges, blind flanges, bolts, access manhole covers, etc., with epoxy lining, as specified herein

B Epoxy Lining AWWA C210-92 - White, or approved equal for shop and field joint applied, except as modified herein

1 Surface Preparation SSPC-SP-10(64), Near White Blast Clean, 2 0 to 3 0 mils surface profile

2 Prime Coat

3 Intermediate Coat.

4 Finish Coat·

5 Minimum allowable dry film system thickness· 12.0 mils

6 Maximum allowable dry film system thickness· 18 0 mils

7 Minimum field adhesion· 700 psi

8 Dry film thicknesses for approved alternate products in accordance with the product manufacturer's recommendations

9 The lining system may consist of three or more coats of the same approved alternate epoxy lining without the use of a separate primer

10 Provide materials from the same manufacturer

C Shop Applied Cement Mortar Lining AWWA C205, shop-applied cement mortar linings, except as specified herein 3/8 inch minimum thickness for pipe diameters 24 inches and smaller Pipe with cut back lining from joint ends no more than 2 inches to facilitate joining and welding of pipe.

2 06 MORTAR FOR EXTERIOR JOINTS

A. Cement Mortar One part cement to two parts of fine, sharp clean sand, mix with water to a consistency of thick cream

B Portland Cement ASTM C150, Type II

C Sand

1 Inside joints AWWA C602, fine graded natural sand

2 Outside joints. ASTM C33, natural sand with 100 percent passing No 16 sieve

D. Water ASTM D1888, Method A, total dissolved solids less than 1000 mg/l, ASTM D512 chloride ions less than 100 mg/l for slurry and mortar cure; ASTM D1293 pH greater than 6 5

PART 3 E X E C U T I O N

3 01 PIPING INSTALLATION

A Conform to applicable provisions of Section 02664 - Water Mains except as modified herein

3 02 EXTERNAL COATING SYSTEM FOR BURIED STEEL PIPE

A. Tape Coating System

1 Inspect pipe, prior to shipment, for holidays and damage to coating Perform electrical holiday test of minimum of 6,000 volts with a 60 cycle current audio detector If test indicates no holidays and outer wrap(s) is torn, remove damaged layers of outer wrap by carefully cutting with sharp razor-type utility knife Wash with Xylol area to be patched and at least 4 inches of undamaged tape where hand-applied tape wrap will overlap AWWA C209 cold-applied tape, compatible with tape-wrapping system applied for each layer of outer-wrap tape that has been removed If damaged area shows holiday when tested, remove outer layers and expose inner wrap Prime exposed area and overlaps with light coat of primer Firmly press into place patch of inner wrap of sufficient size to extend 4 inches from holidays in all directions Holiday test patch to verify that it is installed satisfactorily Retrim outer layer of tape to expose first wrap of outer-wrap tape sufficiently to allow minimum lap of 2 inches in all directions Wash exposed outer wrap tape with Xylol and prime Apply two layers of AWWA C209 outer wrap with 35 mils minimum thickness

2 Regardless of results of electrical holiday test, bubbles in tape coating system are not allowed Cut out bubbles and patch as detailed above

3 Field repairs and applications of coatings AWWA C209 around joint cutbacks except as modified herein Field-welded joints. clean shop-primed ends of weld splatter, damaged primer and rust to achieve required surface preparation prior to field repair of linings and coatings

a Immediately prior to placing joint in trench, remove shop-applied primer by abrasive blasting, solvent or other method as approved by the Owner Representative Avoid damage to adjacent existing coatings. Clean surfaces to achieve surface preparation at least equivalent to SSPC SP6 in accordance with AWWA C209 Solvent environmentally safe and compatible with coating-system primer

b Apply primer immediately prior to application of first layer of tape to achieve maximum bond. Apply tape while primer is still "tacky" with 3-inch minimum overlap over shop-applied coating.

4 Do not expose tape coatings to harmful ultraviolet light for more than 90 days Discard (remove) and replace outer layer of tape coating when exposure exceeds 90 days In case of factory applied coatings, remove joint from site for removal and reapplication of outer layer of tape coatings

B At Owner's option, coating system and application may be tested and inspected at plant site in accordance with AWWA C214

C Cement Mortar Coating AWWA C205, 1-inch minimum thickness, cut back from joint ends no more than 2 inches to facilitate joining and welding of pipe

3.03 EXTERNAL COATING SYSTEM FOR STEEL PIPE INSTALLED ABOVEGROUND, IN VAULTS, TUNNELS OR CASINGS, AND INTERNAL LINING FOR ALL INSTALLATIONS

A Cement Mortar Lining. AWWA C205, 1/2-inch minimum thickness, cut back from joint ends to facilitate joining and welding of pipe

B Safety Paints, coatings, and linings specified herein are hazardous materials Vapors may be toxic or explosive Protective equipment, approved by appropriate regulatory agency, is mandatory for all personnel involved in painting, coating, and lining operations

C Workmanship

1 Application By qualified and experienced workers who are knowledgeable in surface preparation and application of high-performance industrial coatings

2 Paint Application Procedures SSPC Good Painting Practices, Volume 1

D Surface Preparation

1 Prepare all surfaces for painting with abrasive blasting.

2 Schedule cleaning and painting so that detrimental amounts of dust or other contaminants do not fall on wet, newly painted surfaces Protect surfaces not intended to be painted from effects of cleaning and painting operations

3. Prior to blasting, clean surfaces to be coated or lined of grease, oil and dirt by steaming or detergent cleaning in accordance with SSPC SP1.

4. Metal and Weld Preparation· Remove all surface defects such as gouges, pits, welding and torch-cut slag, welding flux and spatter by grinding to 1/4-inch minimum radius

5 Abrasive Material

a Blast only as much steel as can be coated same day of blasting

b Use sharp, angular, properly graded abrasive capable of producing depth of profile specified herein Transport abrasive to jobsite in moisture-proof bags or airtight bulk containers Copper slag abrasives are not acceptable

c After abrasive blast cleaning, verify surface profile with replica tape Furnish tapes to Owner for filing and future reference

d Do not blast if metal surface may become wet before priming commences, or when metal surface is less than 5 degrees F above dew point.

6 Remove all dust and abrasive residue from freshly blasted surfaces by brushing or blowing with clean, dry air

E Coating and Lining Application

1 Environmental Conditions· Do not apply coatings or linings when metal temperature is less than 50 degrees F; when ambient temperature is less than 5 degrees F above dew point, when expected weather conditions are such that ambient temperature will drop below 40 degrees F within 6 hours after application of coating, or when relative humidity is above 85 percent Measure relative humidity and dew point by use of sling psychrometer in

conjunction with U S. Department of Commerce Weather Bureau Psychometric Tables Provide dehumidifiers for all field-applied coatings and linings to maintain proper humidity levels

2 Application Procedures.

a Apply coatings and linings in accordance with manufacturer's recommendations and requirements of this section Provide a finish free of runs, sags, curtains, pinholes, orange peel, fish eyes, excessive overspray or delaminations.

b Thin materials only with manufacturer's recommended thinners Thin only amount required to adjust viscosity for temperature variations, proper atomization and flow-out Mix material components using mechanical mixers

c. Discard catalyzed materials remaining at end of day

3 Apply primer immediately after surface has been cleaned Thoroughly dry pipe before primer is applied Apply succeeding coats before contamination of under surface occurs

4 Allow each coat of paint either to dry or cure amount of time recommended by coating or lining manufacturer before successive coats of paint are applied Apply all successive coats of paint within recoat threshold time as recommended by coating or lining manufacturer on printed technical data sheets or through written communications

3 04 INSPECTION

A Procure services of an independent testing laboratory or inspection service, approved by the Owner Representative, to perform tests on all portions of coating and lining applications Laboratory shall supply services of NACE Certified Coatings Inspectors having Level III Certification for all coating and linings inspection work Include cost of such testing in contract unit price bid for water main Furnish copies of all test reports to the Owner Representative for review If defective coatings or lining are revealed, cost of repair and testing of repair will be paid for by Contractor The Owner Representative shall have full and final decision as to suitability of all coatings and linings tested

B For all field applied coatings and linings, including joints, notify Owner sufficiently in advance of work so that Owner can perform examination of and acceptance of surface preparation and application of each coat prior to application of next coat

Furnish appropriate test data to Owner verifying compliance with requirements of this section of each coat prior to proceeding with next coat Recoat or repair runs, overspray, roughness and/or abrasives in coating, or other indications of improper application in accordance with coating or lining manufacturer's and the Owner Reprentative's instructions

C Repairs, surface preparation and painting will be subject to inspection by Owner Guidelines published by Steel Structures Painting Council will be used as basis for acceptance or rejection of cleaning, painting or coating application SSPC VIS1, Pictoral Surface, along with single-probe magnetic pull-off type dry film thickness gages, electrical holiday detectors, and standard wet film thickness gages will be used to determine acceptability of paint applications

D Check film thickness with nondestructive magnetic pull-off gage such as Mikrotest Model DFG-100 or electronic thickness gage National Bureau of Standards certified thickness calibration plates will be used to verify accuracy of thickness gage Determine maximum and minimum thickness in accordance with SSPC PA2 for frequency and method Evaluate each length of pipe under SSPC PA2 Consider each field joint area separate and discrete for purpose of DFT measurements Perform five spot DFT measurements on each field joint area (15 individual readings) Check thickness of each individual coat as well as thickness of overall system with respect to compliance with this Section. Failure to meet either overall system thickness requirements or requirements of component coats shall be cause for rejection and recoat or repair of entire joint or length of pipe

E Holiday Test

1 Begin inspection after coating has sufficiently cured, usually one to five days (Consult coating manufacturer for specific curing schedule)

2 Use high-voltage d-c holiday detector such as D E Stearns Company Model 14/20 or Tinker & Rasor Model AP/W Use 1600 volts, plus or minus 100 volts Use brass brush type electrode

3 Ground high-voltage d-c holiday detector to metal being inspected. Earth-type ground tape is not acceptable. Mark detected defects with white chalk, repair and reinspect

4 Adhesion Tests. ASTM D4541; pull-off testing using an Elcometer Model 106 Fixed Alignment Adhesion Tester Adhesion testing may be directed by the Engineer on any length of pipe or joint which exceeds maximum coating thickness limitations specified in this Section

3 05 COATINGS AND LININGS INSPECTION

A Owner reserves right to inspect or acquire service of independent third-party inspector who is fully knowledgeable of, and qualified to inspect, surface preparation and application of high-performance coatings to inspect any and all phases of all coatings and linings work, whether field or shop applied Contractor responsible for application and performance of coating and lining whether or not Owner provides such inspection

END OF SECTION

PART 2 PRODUCTS

2.01 APPROVED AND PREAPPROVED PRODUCTS

A For pipe bursting/crushing existing sanitary sewers refer to Section 02768 – Pipe Bursting/Crushing Sanitary Sewers Solid wall pipe shall be produced with plain end construction for heat-joining (butt fusion) conforming to ASTM D2657 Utilize controlled temperatures and pressures for joining to produce a fused leak-free joint

B. Furnish solid wall pipe for sanitary sewer force mains with minimum working pressure rating of 150 psi, and with inside diameter equal to or greater than nominal pipe size indicated on Drawings

C. Furnish solid wall pipe for water line use with minimum working pressure rating of 150 psi, and complying with AWWA C901 or C906 and NSF Standard #61 Outside diameter equal to inside diameter of ductile iron fittings Follow fitting compatibility requirements as per Section 02620 – PVC PIPE

2 02 MATERIALS

A Pipe and Fittings· High density, high molecular weight polyethylene pipe material meeting the requirements of Type III, Class C, Category 5, Grade P34, as defined in ASTM D1248 Material meeting the requirements of cell classification in accordance with ASTM D3350 are also suitable for making pipe products under these specifications

B Gaskets

1 Use gaskets meeting requirement of ASTM F477 Use gasket molded into a circular form or extruded to the proper section and then spliced into circular form. When no contaminant is identified, use gaskets of a properly cured, high-grade elastomeric compound The basic polymer shall be natural rubber, synthetic elastomer, or a blend of both

2 Pipes to be installed in potentially contaminated areas as shown on the plans or indentified in the filed by the owner representative, especially where free product is found near the elevation of the proposed sewer, shall have the following gasket materials for the noted contaminants

CONTAMINANT	GASKET MATERIAL REQUIRED
Petroleum (diesel, gasoline)	Nitrile Rubber
Other Contaminants	As recommended by the pipe manufacturer

C Lubricant Use a lubricant for assembly of gasketed joints which has no detrimental effect on the gasket or on the pipe, in accordance with manufacturer's recommendations

2.03 WORKMANSHIP

A Furnish pipe and fittings that are homogeneous throughout and free from visible cracks, holes, foreign inclusions, or other injurious defects. Provide pipe as uniform as commercially practical in color, opacity, density, and other physical properties

2 04 INSPECTIONS

A The Owner Representative reserves the right to inspect pipes or witness pipe manufacturing Such inspection shall in no way relieve the manufacturer of the responsibilities to provide products that comply with the applicable standards and these Specifications

B Manufacturer's Notification to Customer Should the Owner Representative wish to witness the manufacture of specific pipes, the manufacturer shall provide the Engineer with adequate advance notice of when and where the production of those specific pipes will take place

C Failure to Inspect Approval of the products or tests is not implied by the Owner Representative's decision not to inspect the manufacturing, testing, or finished pipes

2.05 TEST METHODS

A Conditioning Conditioning of samples prior to and during tests are subject to approval by the Owner Representative When referee tests are required, condition the specimens in accordance with Procedure A in ASTM D618 at 73.4 degrees F plus or minus 3 6 degrees F (23 degrees C plus or minus 2 degrees C) and 50 percent relative humidity plus or minus 5 percent relative humidity for not less than 40 hours prior to test. Conduct tests under the same conditions of temperature and humidity unless otherwise specified

B Flattening Flatten three specimens of pipe, prepared in accordance with Paragraph 2 05A, in a suitable press until the internal diameter has been reduced to 40 percent of the original inside diameter of the pipe The rate of loading shall be uniform and at 2-inches per minute. The test specimens, when examined under normal light and with the unaided eye, shall show no evidence of splitting, cracking, breaking, or separation of the pipe walls or bracing profiles

C Joint Tightness Test for joint tightness in accordance with ASTM D3212, except replace the shear load transfer bars and supports with 6-inch-wide support blocks that can be either flat or contoured to conform to the pipe's outer contour

D Purpose of Tests The flattening and the joint tightness tests are not intended to be routine quality control tests, but rather to qualify pipe to a specified level of performance

2.06 MARKING

A. Mark each standard and random length of pipe in compliance with these Specifications with the following information.

1 Pipe size

2 Pipe class

3 Pipe use (water line, sewer force main . . etc)

4 Production code

5 Material designation

PART 2 E X E C U T I O N

2 01 INSTALLATION

A Conform to requirements of the following Sections

1 Section 02731 - Sanitary Sewage Force Mains

2 Section 02761 - Sliplining Sanitary Sewers

3 Section 02664 – Water Mains

B Install pipe in accordance with the manufacturer's recommended installation procedures

END OF SECTION

SECTION 02620

PVC PIPE

PART 1 - GENERAL

1 01 SECTION INCLUDES

A Polyvinyl chloride pressure pipe for water distribution in nominal diameters 4 inches through 16 inches

B Polyvinyl chloride sewer pipe for gravity sanitary sewers in nominal diameters 4 inches through 48 inches.

C Polyvinyl chloride pressure pipe for gravity sanitary sewers and force mains in nominal diameters 4 inches through 36 inches

1 02 UNIT PRICES

A No separate payment will be made for PVC pipe under this section. Include cost in unit price for water mains, gravity sanitary sewer, and force mains

1 03 SUBMITTALS

A Conform to requirements of all provisions and sections of these specifications

B. Submit shop drawings showing design of new pipe and fittings indicating alignment and grade, laying dimensions, fabrication, fittings, flanges, and special details

1 04 QUALITY CONTROL

A Submit manufacturer's certifications that PVC pipe and fittings meet requirements of this Section and AWWA C 900 or AWWA C 905 for pressure pipe applications, or the appropriate ASTM standard specified for gravity sewer pipe

B Submit manufacturer's certification that PVC pressure pipe has been hydrostatically tested at the factory in accordance with AWWA C 900 or AWWA C 905 and this Section

PART 2 - PRODUCTS

2 01 MATERIAL

A Use PVC compounds in the manufacture of pipe that contain no ingredient in an amount that has been demonstrated to migrate into water in quantities considered to be toxic

B Furnish PVC pressure pipe manufactured from Class 12454-A or Class 12454-B virgin PVC compounds as defined in ASTM D 1784 Use compounds qualifying for a rating of 4000 psi for water at 73 4 degrees F per requirements of PPI TR3. Provide pipe which is homogeneous throughout, free of voids, cracks, inclusions, and other defects, uniform as commercially practical in color, density, and other physical properties Deliver pipe with surfaces free from nicks and scratches with joining surfaces of spigots and joints free from gouges and imperfections which could cause leakage

C For PVC pressure pipe used for water mains, provide self-extinguishing PVC pipe that bears Underwriters' Laboratories mark of approval and is acceptable without penalty to Texas State Fire Insurance Committee for use in fire protection lines

D Gaskets

1 Gaskets shall meet the requirements of ASTM F 477. Use elastomeric factory-installed gaskets to make joints flexible and watertight

2 Pipes to be installed in potentially contaminated areas, especially where free product is found near the elevation of the proposed sewer, shall have the following gasket materials for the noted contaminants

CONTAMINANT	GASKET MATERIAL REQUIRED
Petroleum (diesel, gasoline)	Nitrile Rubber
Other Contaminants	As recommended by the pipe manufacturer

E Lubricant for rubber-gasketed joints Water soluble, non-toxic, non-objectionable in taste and odor imparted to fluid, non-supporting of bacteria growth, having no deteriorating effect on PVC or rubber gaskets

2 02 WATER SERVICE PIPE

A Pipe 4-inch through 12-inch· AWWA C 900, Class 150, DR 18, nominal 20-foot lengths, cast iron equivalent outside diameters.

B Pipe 16-inch AWWA C 905; Class 235, DR 18; nominal 20-foot lengths, cast iron equivalent outside diameter

C Joints ASTM D 3139, push-on type joints in integral bell or separate sleeve couplings Do not use socket type or solvent weld type joints

D Make curves and bends by deflecting the joints Do not exceed maximum deflection recommended by the pipe manufacturer. Submit details of other methods of providing curves and bends for review by the Owner Representative

E Hydrostatic Test AWWA C 900, AWWA C 905, ANSI A21 10 (AWWA C110), at point of manufacture, submit manufacturer's written certification

2.03 BENDS AND FITTINGS FOR PVC PRESSURE PIPE

A Bends and Fittings ANSI A21 10, ductile iron, ANSI A21.11 single rubber gasket push-on type joint, minimum 150 psi pressure rating

B Coatings and Linings Conform to requirements of Section 02610 - Ductile-Iron Pipe and Fittings

C Restraints for large diameter PVC pipe (AWWA C905) at the bell shall consist of the following·

1 The restraint shall be manufactured of ductile iron conforming to ASTM A536

2 A backup ring shall be utilized behind the PVC bell

3 A restraint ring, incorporating a plurality or individually actuating gripping surfaces, shall used to connect the bell ring and gripping ring

4 The restraint shall be the Series 2800 as manufactured by EBAA Iron, Inc , or approved equal

2 04 GRAVITY SANITARY SEWER PIPE

A PVC gravity sanitary sewer pipe shall be in accordance with the provisions in the following table

WALL CONSTRUCTION	MANUFACTURER	PRODUCT OPTIONS	ASTM DESIGNATION	SDR (Max)/ STIFFNESS	DIAMETER SIZE RANGE
Solid	J-M Manufacturing Co, Inc	Approved	D3034	SDR 26 / PS 115	6" to 15"
	CertainTeed	Approved	F679 (T-1)	SDR 26 / PS 115	18" to 24"
	Can-Tex				
	Carlon Company	Approved	F679 (T-1)	SDR 35 / PS 46	27" to 36"
	Diamond Plastics Corp				
	North American Pipe Corporation (NAPCO)	Approved	AWWA C900	DR 18 / N/A	4" to 12"
		Approved	AWWA C905	DR 18 / N/A	14" to 36"

B. When solid wall PVC pipe 18 inches to 27 inches in diameter is required in SDR 26, provide pipe conforming to ASTM F679, except provide wall thickness as required for SDR 26 and pipe strength of 115 psi

C For sewers up to 12-inch-diameter crossing over waterlines, or crossing under waterlines with less than 2 feet separation, provide minimum 150 psi pressure-rated pipe conforming to ASTM D 2241 with suitable PVC adapter couplings

D Joints Spigot and integral wall section bell with solid cross section elastometric or rubber ring gasket conforming to requirements of ASTM D 3212 and ASTM F 477, or ASTM D 3139 and ASTM F 477, shall be provided Gaskets shall be factory-assembled and securely bonded in place to prevent displacement The manufacturer shall test a sample from each batch conforming to requirements ASTM D2444

E Fittings· Provide PVC gravity sewer sanitary bends, tee, or wye fittings for new sanitary sewer construction PVC pipe fittings shall be full-bodied, either injection molded or factory fabricated Saddle-type tee or wye fittings are not acceptable

2 05 SANITARY SEWER FORCE MAIN PIPE

A Provide PVC pressure pipe conforming to the requirements for water service pipe, and conforming to the minimum working pressure rating specified in Section 02731 - Sanitary Sewage Force Mains

B. Acceptable pipe joints are integral bell-and-spigot, containing a bonded-in elastomeric sealing ring meeting the requirements of ASTM F 477 In designated areas requiring restrained joint pipe and fittings, use EBAA Iron Series 2000PV, Uniflange Series 1350 restrainer, or equal joint restraint device conforming to UNI-B-13, for PVC pipe 12-inch diameter and less.

C Fittings Provide ductile iron fittings as per Paragraph 2 03, except furnish all fittings with one of the following internal linings

1 Nominal 40 mils (35 mils minimum) virgin polyethylene complying with ASTM D 1248, heat fused to the interior surface of the fitting, as manufactured by American Cast Iron Pipe "Polybond", or U S. Pipe "Polyline"

2 Nominal 40 mils (35 mils minimum) polyurethane, Corro-pipe II by Madison Chemicals, Inc

3 Nominal 40 mils (35 mils minimum) ceramic epoxy, Protecto 401 by Enduron Protective Coatings

D Exterior Protection Provide polyethylene wrapping of ductile iron fittings as required by Section 02630 - Polyethylene Wrap.

E Hydrostatic Tests Hydrostatically test pressure rated pipe in accordance with Paragraph 2 02 E.

PART 3 - E X E C U T I O N

3 01 PROTECTION

A. Store pipe under cover out of direct sunlight and protect from excessive heat or harmful chemicals in accordance with the manufacturer's recommendations

B Contractor is responsible for proper storage and protection of stored pipe.

3 02 INSTALLATION

A Conform to requirements of Section 02664 - Water Mains, Section 02730 - Gravity Sanitary Sewers, Section 02731 - Sanitary Sewage Force Mains, and Section 02763 - Point Repairs to Sanitary Sewers, as applicable

B Install PVC pipe in accordance with Section 02227 - Excavation and Backfill for Utilities, ASTM D 2321, and manufacturer's recommendations.

C Water service pipe 12 inches in diameter and smaller. Installed to clear utility lines and have minimum 4 feet of cover below finished grade above the pipe, unless otherwise required by Drawings.

D. Avoid imposing strains that will overstress or buckle the pipe when lowering pipe into trench

E Hand shovel pipe bedding under the pipe haunches and along the sides of the pipe barrel and compact to eliminate voids and ensure side support

END OF SECTION

SECTION 02629

POLYURETHANE COATINGS ON STEEL OR DUCTILE IRON PIPE

PART 1 - G E N E R A L

1 1 SECTION INCLUDES

A Two-component polyurethane coating system for use as an internal or external coating for steel or ductile iron pipe

1 2 UNIT PRICES

A No separate payment will be made for work performed under this section Include cost of polyurethane coatings in contract unit prices for steel pipe or ductile iron pipe

1 3 SAFETY

A Secure, from manufacturer, Material Safety Data Sheet (MSDS) for polyurethane coatings and repair materials listed in this section

B Safety requirements stated in this specification and in related sections apply in addition to applicable federal, state and local rules and regulations. Comply with instructions of coating manufacturer and requirements of insurance underwriters

C. Adhere to handling and application practices of SSPC-PA Guide 3; SSPC-PS Guide 17 00; Coating Manufacturer's Material Safety Data Sheet

1 4 SUBMITTALS

A Submittals shall conform to requirements of all provisions and sections of these specifications

B Submit coating manufacturer's catalog sheets and technical information for approval, prior to delivery of pipe

C Obtain from coating manufacturer and furnish to Owner's Representative, a coating "affidavit of compliance" to requirements of this section stating that coatings were applied in factory and in accordance with manufacturer's minimum requirements

PART 2 - PRODUCTS

2 1 COATING MATERIAL

A Coating Standard ASTM D16

B Coating System Use a Coating Standard ASTM D16 Type, V system which is a 2-package polyisocyanate, polyol-cured urethane coating The components are mixed in 1 1 ratio at time of application The components are balanced viscosities in their liquid state and do not require agitation during use.

C Exterior Coating Material CORROPIPE II-TX and Joint Coating Material CORROPIPE II-PW, as manufactured by Madison Chemical Industries, Inc , or approved equal

D Internal Coating Material Exterior Coating Material, CORROPIPE II-TX and Joint Coating Material CORROPIPE II-PW, as manufactured by Madison Chemical Industries, Inc , or approved equal

E Cured Coating Properties·

1 Conversion to Solids by Volume. 97 percent plus or minus 3 percent

2 Temperature Resistance· Minus 40 degrees F and plus 130 degrees F

3 Minimum Adhesion 500 psi, when applied without primer to ductile iron pipe which has been blasted to comply with SSPC-SP10

4 Cure Time For handling in 1 minute at 120 degrees F, and full cure within 7 days at 70 degrees F

5 Maximum Specific Gravities Polyisocyanate resin, 1 20 Polyol resin, 1 15

6 Minimum Impact Resistance. 80 inch-pounds using 1-inch diameter steel ball where coating is applied at 30 mils to ductile iron pipe surface which has been blasted to SSPC No 10 finish.

7 Minimum Tensile Strength 2000 psi

8 Hardness 55 plus or minus 5 Shore D at 70 degrees F

9 Flexibility Resistance. ASTM D1737 using 1-inch mandrel Allow coating to cure for 7 days Perform testing on test coupons held for 15 minutes at temperature extremes specified in Paragraph 2 01E

2.2 REPAIR AND/OR TOUCHUP MATERIAL

A CORROPIPE II PW - TOUCHUP (two-component, brush applied), mix in accordance with coating manufacturer's recommendations

2 3 PACKAGING AND LABELING

A Containers Standard containers to prevent gelling, thickening deleteriously or forming of gas in closed containers within period of one year from date of manufacture

B Labeling. Label each container of separately packaged component clearly and durably to indicate date of manufacture, manufacturer's batch number, quantity, color, component identification and designated name or formula specification number of coating together with special instructions Do not use coating components older than one year

2 4 DELIVERY, STORAGE AND HANDLING

A Delivery Deliver coating materials to pipe manufacturer in sealed containers showing designated name, batch number, color, date of manufacture and name of coating manufacturer

B Storage· Store material on site in enclosures, out of direct sunlight in warm, ventilated and dry area

C Protection Prevent puncture, inappropriate opening or other action which may lead to product contamination

PART 3 - E X E C U T I O N

3 1 SURFACE PREPARATION

1. Remove deposits of oil, grease or other organic contaminates before blast cleaning by using solvent wash as specified in SSPC-SP1 Clean and dry surfaces making them completely dry, free of moisture, dust, grit, oil, grease or any other deleterious substances prior to application of coating

2. Exterior and Interior Surfaces SSPC-SP10, near-white metal blast cleaning The blasting shall be done with clean, hard, sharp cutting abrasives with no steel or cast iron shot in the mix

3 Ductile Iron Pipe Prior to the start of production blasting, the Contractor shall prepare specimens for a white metal blast and a near-white metal blast using the equipment and abrasives proposed for the work. During preparation of the specimens, the blasting intensity and abrasive shall be changed as necessary to provide the degree of cleaning required by SSPC-SP10, except that the color of the blasted substrate is not expected to match the color of blasted steel After examination and concurrence by the Owner's Representative, the production blasting may begin The production blasting shall be monitored and controlled by the Contractor so that production pipe surfaces match the surface of the approved blasting specimens.

3 2 THICKNESS

A External Coatings Minimum DFT of 25 mils (0 025 inch)

B. Internal Coatings· Minimum DFT of 35 mils

C Thickness Determinations· Use Type 1 magnetic thickness gage as described in SSPC-PA2 specification Individual readings below 90 percent of specified minimum are not acceptable Average individual spot readings (consisting of three point measurements within 3 inches of each other) less than 95 percent of minimum are not acceptable Average of all spot readings less than minimum thickness specified are not acceptable

3 3 FACTORY APPLICATION OF POLYURETHANE COATING

A Equipment Two-component, 1 1 mix ratio, heated airless spray unit

B Temperature· Minimum 5 degrees F above dew point temperature The temperature of the surface shall not be less than 60 degrees F during application

C Humidity. Heating of pipe surfaces may be required to meet requirements of 2 01E if relative humidity exceeds 80 percent

D Do not thin or mix resins, use as received. Store resins at a temperature above 55 degrees F at all times

E Application· Conform to coating manufacturer's recommendations Apply directly to substrate to achieve specified thickness Multiple-pass, one-coat application process is permitted provided maximum allowable recoat time specified by coating manufacturer is not exceeded.

F Recoating Recoat only when coating has cured less than maximum time specified by coating manufacturer. When coating has cured for more than recoat time, brush-blast or thoroughly sand coating surface. Blow-off cleaning using clean, dry, high-pressure compressed air

G. Curing At ambient temperature above 0 degrees F Do not handle pipe until coating has been allowed to cure as follows

Ambient Temperature	Minimum Full Cure Time
Over 70°F	7 days
50 to 70°F	9 days
0 to 50°F	12 days

3 4 JOINTS

A Apply coating to unlined pipe surfaces including inside of bell socket and outside of spigot

B Joint Coating Materials CORROPIPE II PW (instant-set, two-component material, plural component spray applied), or CORROPIPE II PW -TOUCHUP (two-component, brush applied)

C Coating thickness on sealing areas of spigot end of pipe exterior Minimum 8 mils (0 008 inch), maximum of 10 mils (0 010 inch) Maximum 10 mils may be exceeded in spigot end provided maximum spigot diameter as specified by pipe manufacturer is not exceeded

3 5 INSPECTION

A Owner's Representative may inspect coatings at coating applicator's facilities

B Holiday Inspection AWWA C210, Section 5 3 3 1 Follow coating manufacturer's recommendation Conduct inspection any time after coating has reached initial cure Repair in accordance with paragraph 3 07, Repair and Field Touchup

3.6 PIPE INSTALLATION

A For wastewater projects, provide services of manufacturer's representative for period of not less than 2 weeks at beginning of actual pipe laying operations to advise Contractor regarding installation including but not limited to handling and storing, cleaning and inspecting, coatings repairs, and general construction methods as to how they may affect pipe coatings

B Handling, Shipment, and Storage Nylon straps, padded lifts and padded storage skids are required Field cuts should be kept to minimum Repair damage to coating due to handling or construction practices at no additional cost to. See Section 02610 - Ductile Iron Pipe and Fittings and Section 02611 - Steel Pipe and Fittings for additional requirements

C. Just before each section of pipe is to be placed into the trench, conduct a visual and holiday inspection Defects in the coating system shall be repaired before the pipe is installed.

3 7 REPAIR AND FIELD TOUCHUP

A Apply repair/touchup materials in conformance with factory application of polyurethane coating requirements specified in this section, excluding equipment requirements

B Repair Procedure - Holidays

1. Remove all traces of oil, grease, dust, dirt, etc

2 Roughen area to be patched by sanding with rough grade sandpaper (40 grit)

3 Apply one coat of repair material described above Work repair material into scratched surface by brushing.

C Repair Procedure - Field Cuts or Large Damage

1 Remove burrs from field cut ends or handling damage and smooth out edge of polyurethane coating

2 Remove all traces of oil, grease, dust, dirt, etc

3 Roughen area to be patched with rough grade sandpaper (40 grit) Feather edges and include overlap of 1 inch to 2 inches of roughened polyurethane in area to be patched

4 Apply thick coat of repair material described above Work repair material into scratched surface by brushing Feather edges of repair material into prepared surface. Cover at least 1 inch of roughened area surrounding damage, or adjacent to field cut

D For Wastewater Projects, Repair Procedure - Thermite Brazed Connection Bonds

1 Remove polyurethane coating from area on metal surface which is to receive thermite brazed connection with power wire brush

2 Grind metal surface to shiny metal with power grinder and coarse grit grinding wheel

3 Apply thermite brazed connection using equipment, charge and procedure recommended by manufacturer of thermite equipment.

4. After welded surface has cooled to temperature below 130 F, apply protective coating repair material to weld, exposed pipe surface and damaged areas of polyurethane coating

5. Do not cover or backfill freshly repaired areas of coating at thermite brazed connection until repair material has completely cured Allow material to cure in conformance with manufacturer's recommendations

END OF SECTION

SECTION 02630

POLYETHYLENE WRAP

PART 1 - G E N E R A L

1 01 SECTION INCLUDES

A Polyethylene wrap for cast and ductile iron pipe to be used only in open-cut construction when cathodic protection system is not required by Drawings

1 02 UNIT PRICES

A No separate payment will be made for polyethylene wrap Include cost of polyethylene wrap in unit price for items wrapped

1.03 SUBMITTALS

A Submit product data in accordance with all provisions and sections of these specifications

B Submit product data for proposed film and tape for approval

PART 2 - P R O D U C T S

2 01 MATERIALS

A Polyethylene Film· Tubular or sheet form without tears, breaks, holidays or defects, conforming with requirements of AWWA C 105, 2 5 to 3 percent carbon black content, either low- or high-density.

1 Low-density polyethylene film Low-density polyethylene film shall be manufactured of virgin polyethylene material conforming to the following requirements of ASTM D 1248

a Raw material

1) Type I

2) Class C (black)

3) Grade. E-5

4) Flow rate (formerly melt index). 0.4 g/10 minute, maximum

5) Dielectric strength Volume resistivity, 10^{15} ohm-cm, minimum

b Physical properties

1) Tensile strength. 1200 psi, minimum

2) Elongation 300 percent, minimum

3) Dielectric strength. 800 V/mil thickness, minimum

c Thickness. Low-density polyethylene film shall have a normal thickness of 0 008 inch The minus tolerance on thickness is 10 percent of the nominal thickness

2 High-density, cross-laminated polyethylene film High-density, cross laminated polyethylene film shall be manufactured of virgin polyethylene material conforming to the following requirements of ASTM D 1248

a Raw material

1) Type· III

2) Class· C (black)

3) Grade· P33

4) Flow rate (formerly melt index)· 0 4 to 0 5g/10 minute, maximum

5) Dielectric strength Volume resistivity, 10^{15} ohm-cm, minimum

b Physical properties

1) Tensile strength· 5000 psi, minimum

2) Elongation. 100 percent, minimum

3) Dielectric strength 800 V/mil thickness, minimum

c. Thickness Film shall have a nominal thickness of 0 004 inch. The minus tolerance of thickness is 10 percent of the nominal thickness.

3 Polyethylene Tape Provide 3-inch wide, plastic-backed, adhesive tape, Polyken No 900, Scotchwrap No 50, or equal

PART 3 - E X E C U T I O N

3 01 INSTALLATION

A Preparation

1 Remove all lumps of clay, mud, cinders, etc , on pipe surface prior to installation of polyethylene encasement Prevent soil or embedment material from becoming trapped between pipe and polyethylene.

2 Fit polyethylene film to contour of pipe to effect a snug, but not tight; encase with minimum space between polyethylene and pipe Provide sufficient slack in contouring to prevent stretching polyethylene where it bridges irregular surfaces, such as bell-spigot interfaces, bolted joints, or fittings, and to prevent damage to polyethylene due to backfilling operations Secure overlaps and ends with adhesive tape to hold polyethylene encasement in place until backfilling operations are complete

3 For installations below water table and/or in areas subject to tidal actions, seal both ends of polyethylene tube with adhesive tape at joint overlap

B. Tubular Type (Method A)

1 Cut polyethylene tube to length approximately 2 feet longer than pipe section Slip tube around pipe, centering it to provide 1-foot overlap on each adjacent pipe section, and bunching it accordion-fashion lengthwise until it clears pipe ends

2 Lower pipe into trench and make up pipe joint with preceding section of pipe Make shallow bell hole at joints to facilitate installation of polyethylene tube.

3 After assembling pipe joint, make overlap of polyethylene tube Pull bunched polyethylene from preceding length of pipe, slip it over end of new length of pipe, and secure in place Then slip end of polyethylene from new pipe

section over end of first wrap until it overlaps joint at end of preceding length of pipe Secure overlap in place. Take up slack width at top of pipe to make a snug, but not tight, fit along barrel of pipe, securing fold at quarter points

4 Repair cuts, tears, punctures, or other damage to polyethylene Proceed with installation of next section of pipe in same manner

C Tubular Type (Method B)·

1 Cut polyethylene tube to length approximately 1 foot shorter than pipe section. Slip tube around pipe, centering it to provide 6 inches of bare pipe at each end Take up slack width at top of pipe to make a snug, but not tight, fit along barrel of pipe, securing fold at quarter points, secure ends.

2 Before making up joint, slip 3-foot length of polyethylene tube over end of preceding pipe section, bunching it accordion-fashion lengthwise After completing joint, pull 3-foot length of polyethylene over joint, overlapping polyethylene previously installed on each adjacent section of pipe by at least 1 foot, make each end snug and secure

3 Repair cuts, tears, punctures, or other damage to polyethylene Proceed with installation of next section of pipe in same manner

D Sheet Type

1 Cut polyethylene sheet to a length approximately 2 feet longer than pipe section Center length to provide 1-foot overlap on each adjacent pipe section, bunching it until it clears pipe ends Wrap polyethylene around pipe so that it circumferentially overlaps top quadrant of pipe Secure cut edge of polyethylene sheet at intervals of approximately 3 feet

2 Lower wrapped pipe into trench and make up pipe joint with preceding section of pipe Make shallow bell hole at joints to facilitate installation of polyethylene After completing joint, make overlap and secure ends

3 Repair cuts, tears, punctures, or other damage to polyethylene Proceed with installation of next section of pipe in same manner

E. Pipe-shaped Appurtenances Cover bends, reducers, offsets, and other pipe-shaped appurtenances with polyethylene in same manner as pipe

F Odd-shaped Appurtenances· When it is not practical to wrap valves, tees, crosses, and other odd-shaped pieces in tube, wrap with flat sheet or split length of polyethylene tube by passing sheet under appurtenance and bringing it up around body Make seams by bringing edges together, folding over twice, and taping down Tape polyethylene securely in place at valve stem and other penetrations.

G Repairs· Repair any cuts, tears, punctures, or damage to polyethylene with adhesive tape or with short length of polyethylene sheet or cut open tube, wrapped around pipe to cover damaged area, and secured in place

H Openings in Encasement Provide openings for branches, service taps, blowoffs, air valves, and similar appurtenances by making an X-shaped cut in polyethylene and temporarily folding back film After appurtenance is installed, tape slack securely to appurtenance and repair cut, as well as other damaged area in polyethylene, with tape Service taps may also be made directly through polyethylene, with any resulting damaged areas being repaired as described above

I Junctions between Wrapped and Unwrapped Pipe Where polyethylene-wrapped pipe joins an adjacent pipe that is not wrapped, extend polyethylene wrap to cover adjacent pipe for distance of at least 3 feet Secure end with circumferential turns of tape Wrap service lines of dissimilar metals with polyethylene or suitable dielectric tape for minimum clear distance of 3 feet away from cast or ductile iron pipe

END OF SECTION

SECTION 02640

GATE VALVES

PART 1 GENERAL

1 01 SECTION INCLUDES

A Furnishing and installing gate valves for underground/buried use See section 15101 for above ground service

1 02 UNIT PRICES

A No separate payment will be made for work performed under this Section. Include payment in unit price for relate work

1 03 SUBMITTALS

A Submittals shall conform to requirements of Section 01300 - Submittals

B Submit manufacturer's product data for proposed valves for approval

1 04 QUALITY CONTROL

A Provide manufacturer's affidavit that all gate valves have been satisfactorily tested in the United States in accordance with AWWA C500 and C509

PART 2 PRODUCTS

2 01 MATERIALS

A Gate Valves AWWA C500, C509 and additional requirements of this Section, direct bury and in subsurface vaults open counterclockwise

B If type of valve is not indicated on Drawings, gate valves shall be used as line valves for sizes less than 16-inches If type of valve is specified, no substitute will be allowed

C Gate Valves 1-1/2 Inches in Diameter and Smaller· 125 psig, bronze; rising-stem, single-wedge; disc type; screwed ends, Crane No 428, or equal

D Coatings for Gate Valves 2 Inches and Larger AWWA C550, Indurall 3300 or approved equal, non-toxic, not impart taste to water, function as physical, chemical, and electrical barrier between base metal and surroundings, minimum 8-mil-thick, fusion-bonded epoxy, prior to assembly of valve, apply protective coating to interior and exterior surfaces of body

E Gate Valves 2 Inches in Diameter Iron body, double gate, non-rising stem, 150-pound test, 2-inch square nut operating clockwise to open

F Gate Valves 4 Inches to 12 Inches in Diameter Non-directional, resilient seated (AWWA C509) or parallel seat double disc (AWWA C500), 200 psig, bronze mounting, push-on bell ends with rubber joint rings and nut operated unless otherwise specified, resilient seated provide American Darling 2500-1, US Pipe Metroseal 200 or approved equal, double disc provide American Darling 52, Clow F-6110 or approved equal, and comply with following·

1 Design· Fully encapsulated rubber wedge or rubber seat ring mechanically attached with minimum 304 stainless steel fasteners or screws, threaded connection isolated from water by compressed rubber around opening

2 Body Cast or ductile iron; flange bonnet and stuffing box together with ASTM A307 Grade B bolts Cast in body manufacturer's initials, pressure rating, and year manufactured

3 Bronze· Valve components in waterway to contain not more than 15 percent zinc and not more than 2 percent aluminum

4 Stems. ASTM B763 bronze, alloy number 995 minimum yield strength of 40,000 psi, minimum elongation in 2-inches of 12%, non-rising

5 "O" Rings AWWA C509, sections 2 2 6 and 4 8 2

6 Stem Seals Consist of three "O" rings, two above and one below thrust collar with anti-friction washer located above thrust collar

7 Stem Nut Independent or integrally cast of ASTM B62 bronze

8 Resilient Wedge· Molded; synthetic rubber; vulcanized and bonded to cast or ductile iron wedge or attached with 304 stainless steel screws tested to meet or exceed ASTM D429 Method B, seat against epoxy-coated surface in valve body

9 Bolts AWWA C509 Section 2 2 5, stainless steel, cadmium plated, or zinc coated

G Gate Valves 14 Inches to 24 Inches in Diameter. AWWA C500; push-on bell ends with rubber rings and nut operated unless otherwise specified, double disc, 150 psi, and comply with following

1 Body Cast or ductile iron, flange together bonnet and stuffing box with ASTM A307 Grade B bolts. Cast in body manufacturer's initials, pressure rating, and year manufactured Equipped with rollers, tracks and scrapers.

2 Stems Machined from ASTM B62 bronze rod with integral forged thrust collar machined to size; non-rising

3 Stem Seals Consist of one "O" ring above and one "O" ring below thrust collar with anti-friction washer located above thrust collar for operating torque

4 Stem Nut Independent or integrally cast of ASTM B62 bronze

5 Discs Cast iron with bronze disc rings securely peened into machined dovetailed grooves

6 Wedging Device Solid bronze or cast-iron, bronze-mounted wedges Thin plates or shapes integrally cast into cast-iron surfaces are acceptable. Other moving surfaces integral to wedging action shall be bronze monel or nickel alloy-to-iron

7 Bronze Mounting Built as integral unit mounted over, or supported on, cast-iron base and of sufficient dimensions to be structurally sound and adequate for forces which will be imposed on it

8 Gear Cases Cast iron, furnished on all 18-inch and larger valves and of extended type with steel side plates, lubricated, gear case enclosed with oil seal or O-rings at all shaft openings

9. Stuffing Boxes Located on top of bonnet and outside gear case

H Gate Valves 20 Inches and Larger Furnish and equip with bypass valves

1 Sizes Provide 3-inch bypass valves for 16-inch through 20-inch gate valves Provide 4-inch bypass valves for 24-inch gate valves

I Valves 4 Inches through 12 Inches for Installation in Vertical Pipe Lines· Double disc, square bottom

J Valves 14 Inches and Larger for Installation in Horizontal Pipe Lines Equipped with bronze shoes and slides

K Gate Valves Installed at Greater than 4-foot Depth Provide non-rising, extension stem having coupling sufficient to attach securely to operating nut of valve Upper end of extension stem shall terminate in square wrench nut no deeper than 4 feet from finished grade

L Gate Valves in Factory Mutual (Fire Service) Type Meter Installations Conform to provisions of this specification, outside screw and yoke valves, carry label of Underwriters' Laboratories, Inc., flanged, Class 125, clockwise to close

M Provide flanged joints when valve is connected to steel

PART 3 EXECUTION

3 01 EARTHWORK

A Conform to applicable provisions of Section 02227 - Excavation and Backfilling for Utilities

3 02 SETTING VALVES AND VALVE BOXES

A Remove foreign matter from within valves prior to installation Inspect valves in open and closed positions to verify that all parts are in satisfactory working condition

B Install valves and valve boxes where shown on Drawings or as located by the Engineer Set valves plumb and as detailed Center valve boxes on valves Carefully tamp earth around each valve box for minimum radius of 4 feet, or to undisturbed trench face if less than 4 feet Install valves completely closed when placed in water line

C Regardless of type of pipe used in water line construction, pipe section of each valve box must be of cast iron, ductile iron, or DR18 PVC pipe cut to proper length Size to allow proper future operation of valve Assemble and brace box in vertical position as indicated on drawings

3 03 DISINFECTION AND TESTING

A Disinfect valves and appurtenances as required by Section 02675

3.04 PAINTING OF VALVES

A Paint valves in vaults, stations and aboveground using ACRO Paint No 2215, "Galveston Blue" or approved equal, unless otherwise directed by the Owners Representative

END OF SECTION

SECTION 02641

BUTTERFLY VALVES

PART 1 GENERAL

1 01 SECTION INCLUDES

A. Butterfly valves

1 02 MEASUREMENT AND PAYMENT

A Unit Prices

1 Payment for butterfly valves 20 inches and smaller is on unit price basis for each Payment includes box (when required), actuator and appurtenances necessary for complete installation of the valve.

2 Payment for butterfly valves 24 inches and larger is on a unit price basis. Payment includes manhole, actuator and appurtenances necessary for complete installation of the valve

B Stipulated Price (Lump Sum) If Contract is Stipulated Price Contract, payment for work in this section is included in total Stipulated Price

1 03 REFERENCES

A ASME B 16 1 – Cast Iron Pipe Flanges and Flanged Fittings

B ASTM A 126 – Standard Specification for Gray Iron Castings for Valves, Flanges and Pipe Fittings

C AWWA C 504 – Standard for Rubber-Seated Butterfly Valves

D AWWA C 550 – Standard for Protective Interior Coatings for Valves and Hydrants

1.04 SUBMITTALS

A. Submit manufacturer's product data for proposed valves and actuators for approval

B Submit manufacturer's affidavit for proposed valves and actuators certifying compliance with specifications

C Submit manufacturer's affidavit that butterfly valves were manufactured in the United States, and conform to applicable requirements of AWWA C 504 and that they have been satisfactorily tested in the United States in accordance with AWWA C 504 using

test pressure of 150 psi in both directions Submit Proof-of-Design and hydrostatic testing procedure in accordance with AWWA C 504

D. Submit manufacturer's affidavit that coating for interior surfaces of valves conform to applicable requirements of AWWA C 550 Submit results of holiday test and thickness measurements of coatings

E. Furnish, at time of delivery, affidavit of compliance, as specified in Section 6.3 of AWWA C 504 certifying compliance with applicable portion of AWWA C 504 and modification or supplements herein Furnish certified drawings and material test records by manufacturer covering items included in Section 4 3 of AWWA C 504, for review. Furnish certified copies of test reports covering items in Sections 4 5 8 5 5, 4 5 8 5 8 and 5 2 1 through 5 2 4 3 of AWWA C 504 for review

F Submit data indicating maximum torque required to open valve, maximum torsional strength of shaft and torque output of actuator

G Provide submittal information on CD-ROM in Adobe portable document format (* PDF)

H Include number of turns to operate valves to fully open/closed

1 05 QUALITY CONTROL

A Perform valve leakage tests in both directions at 150 psi in factory and field Hydrostatic field tests of 150 psi shall be made against dished head plug or similar arrangement

B For purposes of interpreting referenced AWWA tests, the following shall apply Shutoff pressure is 150 psi, cycle consists of rotating disc from fully opened to fully closed position, for valves larger than 72 inches, proof of design shall require 1000 cycles and shall be performed on valve greater than 72 inches of like design and construction When proof of design tests are performed on valve delivered to job site, replace disc, bushing, shaft and seals with new and unused items, and test and certify as described above

C Hydrostatic Testing by Manufacturer

1 Hydrostatic testing to be witnessed by Project Manager prior to shipment of valves Provide minimum 4 weeks notice to Project Manager to schedule witness testing. When possible, maximize number of valves to be tested during a plant visit, no more than two visits will be allowed per project to witness test valves, unless otherwise approved by Project Manager City will pay expenses for each visit up to total of two visits incurred by Project Manager to witness testing of each grouping of valve(s) per project Expenses for subsequent or extended visits by Project Manager for defective valves, improper scheduling or valve failures are to be paid by Contractor. Witness of hydrostatic testing by Project Manager will only be in regards to compliance with this specification and will not

constitute approval by Project Manager nor relieve Contractor of obligations to comply with contract documents

2 Document serial number on valve at time of testing and reflect in certified test records furnished to Project Manager Identification plate must be permanently affixed to valve and actuator prior to hydrostatic testing

3 Hydrostatic testing to conform to AWWA C504 except as modified below

a Install actuator prior to hydrostatic testing Test actuator to verify actual number of turns to match manufacturer's published number of turns Verify valve stops are in correct positions

b Fully open and close valve prior to performing shell test and prior to each leakage test.

c Perform shell test first

d When tested with water, adequately dry seat and disc

e When tested with air, fill top of valve with water to aid in viewing possible leakage

f Pressure Gauges Calibrated within past 12 months, 0-500 psi range in increments of 5 psi, present calibration certificates prior to hydrostatic testing

g If seat adjustment is required during hydrostatic testing, perform valve leakage test again in both directions Once seat adjustment is made, fully open and fully close valve three (3) times, and repeat leakage test

4 Field Testing

a When valve arrives at the job site, Contractor is to operate valve fully open and closed twice in presence of Project Manager. Document number of turns to open and close each time

b Install operator nut plum.

c After valve is installed, repeat the operation test and document number of turns in presence of Project Manager

d Manufacturer's representative must be present to witness the operation test. Verify valve operate fully open/closed twice at the appropriate number of turns

PART 2 PRODUCTS

2 01 VALVE AND ACTUATORS

A. Butterfly Valves and Actuators. Provide approved butterfly valves and actuators Conform to AWWA C 504, except as modified or supplemented herein

B If type of valve is not indicated on Drawings, use butterfly valves for line valve sizes 24-inch and larger When type of valve is specified on Drawings, no substitute will be allowed, unless otherwise approved by Project Manager.

C Butterfly valves shall be short-body, flanged design and installed at locations as shown on Drawings.

D Direct-bury valves and valves in subsurface vaults shall open clockwise Above-ground and plant valves shall open counterclockwise.

E Provide flanged joints when valve is connected to steel or PCCP

F Butterfly Valves and Actuators (Additional Requirements for Large Diameter Water Lines)

1 Provide valves from approved manufacturer Provide all valves for single project, from same manufacturer

2 Valves larger than 72-inches in diameter design allowable stresses at rated pressure not to exceed one-third of yield strength or one-fifth of ultimate strength of material used

3 Provide manual actuators for single project, from same manufacturer

4 Shaft connecting actuator to valve body must be fully enclosed Bonnet and extension to be fully enclosed and watertight

2 02 VALVE CONSTRUCTION

A Valves AWWA C 504, Class 150B. Body Cast iron, ASTM A 126, Class B Flanges ASME B 16 1, Class 125 lb

B Discs for Butterfly Valves· Either cast iron or ductile iron Valves greater than 54" in diameter must utilize flow through disc or low-profile disc

C Seats. Buna-N or neoprene, and may be applied to disc or body Seats shall be mechanically secured and may not rely solely on adhesive properties of epoxy or similar bonding agent to attach seat to body. Seats on disc shall be mechanically retained by stainless steel (18-8) retaining ring held in place by stainless steel (18-8) cap screws that pass through rubber seat for added retention When seat is on disc, seat shall be retained in position by shoulders located on both disc and stainless-steel retaining ring Mating

surfaces for seats Type 304 or 316, stainless steel and secured to disc by mechanical means Sprayed-on or plated mating surfaces will not be allowed Seats must be replaceable in field for valves greater than 30 inches in diameter Valves with segmented retaining rings will not be accepted

D Coat interior wetted ferrous surfaces of valve, including disc, with epoxy suitable for potable water conditions Epoxy, surface preparation, and epoxy application In accordance with AWWA C 550 and coating manufacturer's recommendations Provide three coats of two-component, high-build epoxy with minimum dry film thickness of 12 mils Provide approved epoxy coating Coatings shall be holiday tested and measured for thickness

E Valve shaft and keys. 24 inches in diameter and greater valves require a minimum of two (2) taper pins used for attaching valve shaft to valve disc, use of torque plug for purposes of attaching valve shaft to valve disc is not permitted· Type 304 stainless steel for treated (potable) water applications, Type 316 stainless steel for raw water applications. Shaft Bearings· Stainless steel, bronze, nylon, or Teflon (supported by fiberglass mat or backing material with proven record of preventing Teflon flow under load) in accordance with AWWA C 504 Sinter stainless steel bearing material. Design valve shaft to withstand 3 times amount of torque necessary to open valve

F Packing. Self adjusting and wear compensating, full or split ring V-type, and replaceable without removing actuator assembly

G Retaining Hardware for Seats Type 304 or 316 stainless steel Nuts and screws used with clamps and discs for rubber seats shall be held securely with locktight, or other approved method, to prevent loosening by vibration or cavitational effects

H Valve disc shall seat in position at 90 degrees to pipe axis and shall rotate 90 degrees between full-open and tight-closed position. Install valves with valve shafts horizontal and convex side of disc facing anticipated direction of flow, except where shown otherwise on Drawings

I For valves utilizing retaining rings, tighten bolts to a uniform torque Measure torque prior to testing valve

2 03 VALVE ACTUATOR CONSTRUCTION

A Provide actuators for valves with size based on line velocity of 12 feet per second and unidirectional service, and, unless otherwise shown on Drawings, equip with geared manual actuators Provide fully enclosed and traveling-nut type, rack-and-pinion type, or worm-gear type for valves 24 inches and smaller Provide worm-gear type for valves 30 inches and larger

B Provide actuator designed for installation with valve shaft horizontal unless otherwise indicated on Drawings

C Provide bonnet extensions, as required, between valve body and actuator Space between actuator housing and valve body shall be completely enclosed so that no moving parts are exposed to soil or elements

D Provide oil-tight and watertight actuator housings for valves, specifically designed for buried service or submerged service when located in valve vaults, and factory packed with suitable grease

E Install valve position indicator on each actuator housing located above ground or in valve vaults. Valves shall be equipped with 2-inch actuator nut only

F Indicate direction of opening of valve on exposed visible part of assembly and cast direction of open on 2 inch nut on top of valve operator extension Paint 2 inch actuator nut and extension shaft black when counter clockwise open and red when clockwise to open

G Design worm-gear or traveling-nut actuators to be self-locking and designed to transmit twice the required actuator torque without damage to faces of gear teeth or contact faces of screw or nut

H. The valve stops shall be capable of withstanding a 450 ft lb torque against the stop without damage to either the stop or the gear teeth

2 04 VALVE BOXES

A Provide Standard Type "A" valve boxes conforming to requirements of Section 02604 – Valve Boxes, Meter Boxes, and Meter Vaults

PART 3 E X E C U T I O N

3 01 EARTHWORK

A Conform to applicable provisions of Section 02227 – Excavation and Backfill for Utilities

3 02 SETTING VALVES AND VALVE BOXES

A Prior to Hydrostatic testing of water line and valve

1 Test valve by opening and closing valve at a minimum of two times to verify valve seats properly

2 Verify number of turns from fully open to fully closed position is same as identified in manufacturer's submittal

3 Adjust valve as required if number of turns do not match

4 Remove foreign matter from within valves

B Install valves where shown on Drawings or as located by Project Manager Use valve boxes for valves 20 inches and smaller Set valves plumb and as detailed Center valve boxes on valves Carefully tamp earth around each valve box for minimum radius of 4 feet, or to undisturbed trench face when less than 4 feet

C Avoid disturbing or overstressing valve body when installing valves Perform field adjustment of valves under pressure to ensure shutoff occurs in number of rotations as described in valves operation and maintenance manual

D Attach two four (4) foot lengths of pipe to each side of valve prior to installation in line

E. Submit certification that large diameter valve was installed, adjusted, and exercised in accordance with manufacturer's instructions Manufacturer's certification shall state that all performance characteristics of large diameter valves, as installed, have been met Adjustments made to valve, for any reason, must be made by manufacturer's representative

3.03 DISINFECTION AND TESTING

A Assist City with disinfection of valves and appurtenances as required by Section 02675 – Disinfection of Water Lines and test as required by Section 02676 – Hydrostatic Testing of Pipelines Do not use valves for throttling without prior approval of manufacturer

3 04 COATING OF PIPING

A Coat valves located in vaults, stations, and above ground using approved paint Coating shall be 6-12 mils thick, but no more than 12 mils Apply coating in accordance with manufacturer's recommendations

END OF SECTION

SECTION 02645

FIRE HYDRANT ASSEMBLY

PART 1 GENERAL

1 01 SECTION INCLUDES

A. Fire hydrants

1 02 UNIT PRICES

A Measurement is on a unit price basis for each fire hydrant assembly installed Fire hydrant assembly includes the fire hydrant and gate valve and box as shown on the standard details

B Measurement for fire hydrant branches (leads) is on a linear foot basis for each branch installed measured from the main to the gate valve Separate payment will be made for open cut and augered branches

C Measurement for removing and salvaging of fire hydrants is on a unit price basis for each fire hydrant removed. This includes removing hydrant and valve if available, plugging branch line and removing materials from site. Return salvage fire hydrants to Owner

1 03 SUBMITTALS

A Submit product data in accordance with all provisions and sections of these specifications

1 Control drawing(s) for proposed hydrant Include model number, parts list, and material specifications, unique drawing number and descriptive legend identifying hydrant Such drawing(s) should be same as approval drawing(s) on file with the Owner

2 Material safety data sheets for lubricants

3 Affidavit of compliance for coating materials

4 Certified hydraulic performance test report for proposed hydrant

PART 2 PRODUCTS

2 01 HYDRANT MATERIALS

A Hydrants AWWA C502, dry barrel design, tamper resistant, same manufacturer throughout project

1 "O" Ring Seal Packing· Prevent water leakage between barrel and lubrication chamber. Provide dynamic seals of Buna "N" or other oil resistant material and static seals of Buna "N" or other approved synthetic rubber

2 Bronze Hydrant components in waterway to contain not more than 15 percent zinc and not more than 8 percent lead

3 Acceptable Manufacturer· Mueller Super Centurian 250, American Darling B84B or approved equal

B Operating Stems Everdur, or other high-quality non-corrodible metal where threads are located in barrel or waterway Bronze-to-bronze working parts in waterway, genuine wrought iron or steel where threads are not located in barrel or waterway, bronze bushed at penetration of stuffing box, seal threads against contact with water regardless of open or closed position of main valve Connect operating stems with breakable coupling

C Main Valve (shut-off valve) Circular, compression-type; closes with line pressure, minimum opening of 5-1/4 inches in diameter Seal bottom end of stem threads from contact with water with cap nut

D Valve Mechanism Bronze valve seat ring threaded into bronze drain ring, seat ring and main valve assembly removable from above ground through upper barrel with lightweight seat removal wrench, breakable stem coupling opposite barrel breakaway, bronze or corrosion-resistant pins and locking devices, bronze valve stem sleeve, O-ring seals and travel stop, sealed lubricating reservoir at top and bottom which fully lubricates threads and bearing surfaces when opening or closing main valve, thrust bearing or lubricated thrust collar for operating assembly Lubricants: Food Grade. Valve Seat Molded "Natural" rubber; scale durometer rating of 90±5, minimum thickness of 1/2 inch Natural Rubbers Resistant to microbiological attack

E Lower Hydrant Barrel Single piece coupled to upper barrel to allow 360-degree rotation of upper barrel. Bury Length Distance from bottom of inlet to ground line as specified Ground Line Clearly marked on barrel Indicate inside diameter and wall thickness (with tolerances) for upper barrel, lower barrel, and bonnet sections. Show dimensions at minimum sections to demonstrate compliance with Paragraph 3.2 6 of AWWA C502

F Extensions Permit use of one or more standard extensions available from manufacturer in lengths from 6 inches to 60 inches in 6-inch increments.

G Provide hydrants with automatic, positively operating, non-corrodible drain or drip valve to drain hydrant completely when main valve is shut Bronze or corrosion resistant drain line Tapping of drain holes is not required

H Inlet Connection Elbow with AWWA Standard bell designed for 6-inch mechanical joint, or push-on Joints· ANSI A21 11, AWWA C111

I. Operating Nut and Hold-down Nuts Stainless steel or cast or ductile iron with bronze inserts or, as an alternative, provide security device with bronze operating nut Any such security devices shall not require special tools for normal off/on operation of hydrant Fabricate hold-down assemblies of suitable metallic materials for service intended

J Field-Replaceable Nozzles NFPA No 194, ANSI B26-1925, mechanically attached to hydrant body counterclockwise, sealed with "O" rings and mechanically located into place, provide two hose nozzles with 2-1/2 inch nominal inside diameter and one pumper nozzle with 4-inch nominal inside diameter, with Storz connections

K Pumper Nozzle Allow a minimum unobstructed radius of 10 inches from threaded surface of nozzle throughout path of travel of wrench or other device used to fasten hose to nozzle

L Nozzle Caps Security chains to hydrant barrel, minimum 1/8-inch diameter, "Natural" rubber or neoprene gasket seals

M Hydrant shoe with 6-inch cast or ductile iron pipe diameter inlet, flanged, swivel or slip joint with harnessing lugs for restrained joints Underground flanging shall incorporate minimum of six full 3/4-inch diameter electro-galvanized or cadmium coated steel bolts or four 5/8-inch diameter stainless or cadmium coated steel bolts

N Provide traffic model hydrants equipped with safety flange on hydrant barrel and stem Equip body of hydrant with breakable flange, or breakable bolts, above finish grade

O Lubricate hydrants with food grade oil or with grease meeting requirements of FDA 21 CFR 178 3570 and manufactured with FDA approved oxidation inhibitors.

P Accomplish replenishment of lubricant for hydrant working parts without removing hydrant bonnet Store lubricant system in reservoir. Lubricate bearing surfaces and working parts during normal operation of fire hydrant

Q Hydrant Painting Shop coated as follows·

1 Exterior Above Traffic Flange (including bolts and nuts)

a Surface Preparation SSPC-SP10 (NACE 2), near white blast cleaned surface

b Coat with a three (3) coat alkyd/alkyd/silicone alkyd system with a total dry film thickness (DFT) of 6 - 9 mils as follows

(1) Prime Coat Oil Modified Alkyd Primer, Acro Products No 1104, Heavy Duty Tank & Steel Primer, or approved equal; SSPC Paint Specification No 25 Total dry film thickness (DFT) 2 - 3 mils

(2). Intermediate Coat Heavy Duty Industrial Alkyd Enamel, Acro Products No. 2214, or approved equal, SSPC Paint Specification No. 104, Federal Standard FF-E-489 Total dry film thickness (DFT): 2 - 3 mils

(3) Finish Coat Silicone Alkyd Resin Enamel, Acro Products No 2215 or approved equal, SSPC Paint Specification No 21. Total dry film thickness (DFT) 2 - 3 mils. Exception hydrant bonnet shall not be finish shop coated - only intermediate coated Finish coating shall be field applied and color coded when installed in accordance with the following values that can be obtained from the City's Fire Marshalls office

Flow rate greater than 1500 gpm Light Blue

Flow rate from 1000-1499 gpm Green

Flow rate from 500-999· Orange

Flow rate less than 500· Red

(4) Colors Primer Manufacturers standard color Finish coat of hydrant body Red (Acro 555 crystal blue or equivalent).

2 Exterior Below Traffic Flange

a Surface Preparation· SSPC-SP10 (NACE 2); near white blast cleaned surface

b Coat with a three (3) coat system as follows·

(1) Primer and Intermediate Coat. Coal tar epoxy, Acro Products No 4467, or approved equal; SSPC Paint Specification No 16 Apply two (2) coats with a dry film thickness (DFT) of 8 - 10 mils each for a total dry film thickness (DFT) of 16 - 20 mils

(2) Finish Coat Water based vinyl acrylic mastic, Acro Products No 7782, or approved equal Apply one (1) coat with a dry film thickness (DFT) of 6 - 8 mils. Finish coat color· Same as finish coat for exterior above traffic flange, i e red (Acro 555 crystal blue or equivalent)

3 Interior Surfaces Above and Below Main Valve·

a All materials used for internal coating of hydrant interior ferrous surfaces must conform to ANSI/NSF Standard 61 as suitable for contact with potable water as required by Chapter 290, Rules and Regulations for Public Water Systems, Texas Commission on Environmental Quality (TCEQ)

b Surface Preparation· SSPC-SP10 (NACE 2), near white blast cleaned surfaces

c Coating. Liquid or powder epoxy system, AWWA Standard C550, latest revision Coating may be applied in two (2) or three (3) coats, according to manufacturers recommendations, for a total dry film thickness (DFT) of 12 - 18 mils.

4 General Coating Requirements

a Coatings Applied in strict accordance with manufacturer's recommendations No requirements of this specification shall cancel or supersede written directions and recommendations of specific manufacturer so as to jeopardize integrity of applied system.

b Hydrant supplier shall furnish an affidavit of compliance that all materials and work furnished complies with requirements of this specification and applicable standards referenced herein

2 02 HYDRANT PERFORMANCE STANDARDS

A Hydraulic Performance Standards

1 Provide hydrants capable of a free discharge of 1500 gpm or greater from single pumper nozzle at a hydrant inlet static pressure not exceeding 20 PSIG as measured at or corrected to hydrant inlet at its centerline elevation

2 Provide hydrants capable of a discharge of 1500 gpm or greater from single pumper nozzle at a maximum permissible head loss of 8 0 psig (when corrected for inlet and outlet velocity head) for an inlet operating pressure not exceeding 37 psig as measured at or corrected to hydrant inlet at its centerline elevation

B Hydraulic Performance Testing. AWWA C502, conduct certified pressure loss and quantity of flow test by qualified testing laboratory on production model (5-foot bury length) of hydrant (same catalog number) proposed for certification Submit certified test report containing following information.

1 Date of test, no more than five years prior to date of proposed use, on fire hydrant with similar hydraulic characteristics

2 Name, catalog number, place of manufacture, and date of production of hydrant(s) tested

3 Schematic drawing of testing apparatus, containing dimensions of piping elements including

a Inside diameter and length of inlet piping

b Distance from flow measuring points to pressure measurement point

c. Distance from flow and pressure monitoring points to hydrant inlet

d Distance from pressure monitoring point to nozzles.

e Inside diameter and length of discharge tubing

4 Elevation of points of measurement, inlet, and

5 Reports, or certificates documenting accuracy of measuring devices used in test

6 Conduct test on at least three separate hydrants of same fabrication design Inlet water temperature 70 degrees F ± 5 degrees F

C Provide hydrants equipped with breakable barrel feature and breakable valve stem coupling such that vehicular impact will result in clean and complete break of barrel

and valve stem at breakable feature Provide hydrant shutoff valve which remains closed and tight against leakage upon impact

2 03 LEADS

A. Branches (Leads) Conform to requirements of Section 02610 - Ductile-Iron Pipe and Fittings, Section 02611 - Steel Pipe and Fittings, and Section 02620 - PVC Pipe

PART 3 E X E C U T I O N

3 01 INSTALLATION

A Set fire hydrant plumb and brace at locations and grades as shown on Drawings When barrel of hydrant passes through concrete slab, place a piece of standard sidewalk expansion joint material, 3/4 inch thick, around section of barrel passing through concrete

B Locate nozzle centerline minimum 18 inches and a maximum of 24" above finish grade

C Place 12-inch x 12-inch yellow indicators (plastic, sheet metal, plywood, or other material approved by Owner's Representative) on pumper nozzles of new or relocated fire hydrants installed on new mains not in service Remove indicators after new main is tested and approved by Owner's Representative

D Do not cover drain ports when placing concrete thrust block

E. All changes in profile from approved plans due to obstructions not shown on plans which require a change in depth of bury of fire hydrant shall be approved in writing by Owner's Representative for design prior to installation of hydrant Any adjustment required in flow line of water main or to barrel length of fire hydrant shall be incidental to unit price of fire hydrant and no separate payment shall be made for such adjustments

F Remove and dispose of fire hydrants shown on Drawings as per paragraph 1 02 C

G Owner may, at any time prior to or during installation of hydrants for a specific project, randomly select a furnished hydrant for disassembly and laboratory inspection, at Owner's expense, to verify compliance with Owner's requirements If such hydrant is found to be non-compliant, replace at Contractor's expense, all or a portion of furnished hydrants with hydrants that comply with Owner's requirements

H Install branches (leads) in accordance with Section 02664 - Water Mains.

END OF SECTION

SECTION 02664

WATER MAINS

PART 1 GENERAL

1 01 SECTION INCLUDES

A Installation of water mains

1 02 UNIT PRICES

A Measurement for water mains open cut or augered with or without casing is on a linear foot basis for each size of pipe installed.

1. Mains· Measure along axis of pipe and include fittings and valves

2 Branch Pipe Measure from axis of main to end of branch

1 03 SUBMITTALS

A Submittals shall conform to requirements of all provisions and sections of these specifications

B Conform to submittal requirements of applicable specification section for type of pipe used

C Submit preconstruction and post construction photographs if required

PART 2 PRODUCTS

2 01 PIPE MATERIALS

A Install pipe materials (as per this section) which conform to following

1 Section 02610 - Ductile Iron Pipe (DIP) and Fittings.

2 Section 02611 - Steel Pipe and Fittings

3 Section 02620 - Polyvinyl Chloride (PVC) Pipe.

B Type of pipe materials used are identified on Drawings

PART 3 EXECUTION

3 01 GENERAL

A Conform to applicable specification sections for types of pipe used

B. Employ workmen who are skilled and experienced in laying pipe of type and joint configuration being furnished Provide watertight pipe and pipe joints Lay pipe with bell ends facing in direction of laying

C Lay pipe to lines and grades shown on drawings. Use adequate surveying methods and equipment and employ personnel competent in use of this equipment Horizontal and vertical deviations from alignment as indicated on Drawings shall not exceed 0.10 feet Measure and record "as-built" horizontal alignment and vertical grade for on-site record drawings.

D Confirm that separation from gravity sanitary sewers and manholes or force mains have minimum clearance of nine feet in all directions unless a special design is provided for on the drawings

E Where above clearance cannot be attained, and a special design has not been provided on Drawings, obtain direction from Owner's Representative before proceeding with construction

F. Inform Owner's Representative if any unmetered sprinkler or fire line connections exist which are not shown on Drawings to be transferred to new main Make transfer only after approval by Owner's Representative

G Keep pipe trenches free of water which might impair pipe laying operations Prevent pipe bells from coming in contact with subgrade Grade pipe trenches to provide uniform support along bottom of pipe. Excavate for bell holes for proper sealing of pipe joints after bottom has been graded and in advance of placing pipe Lay not more than 100 feet of pipe in trench ahead of backfilling operations Cover or backfill laid pipe if pipe laying operations are interrupted and during non-working hours Place all backfill carefully and simultaneously on each side of pipe to avoid lateral displacement of pipe and damage to joints If adjustment of pipe is required after it has been laid, remove and re-lay as new pipe

H Owner will handle, at no cost to Contractor, all operations involving opening and closing valves for wet connections and for chlorination Contractor is responsible for handling all necessary installations and removal of all chlorination and testing taps and risers

3 02 HANDLING, CLEANING AND INSPECTION

A Handling·

1 Place pipe along project site where storm water or other water will not enter or pass through pipe

2 Pipe and Fittings Loaded, transported, unloaded and otherwise handled in manner and by methods which will prevent damage of any kind thereto Handle and transport pipe with equipment designed, constructed and arranged to prevent damage to pipe, lining and coating. Do not permit bare chains, hooks, metal bars, or narrow skids or cradles to come in contact with coatings Where required, provide pipe fittings with sufficient interior strutting or cross bracing to prevent deflection under their own weight

3. Hoist pipe from trench side into trench by means of sling of smooth steel cable, canvas, leather, nylon or similar material

4. Use every precaution to prevent injury to pipe, protective linings and coatings

a Package stacked pipe on timbers Place protective pads under banding straps at time of packaging.

b Pad fork trucks using carpet or some other suitable type of material Use nylon straps around pipe for lift when relocating pipe with crane or backhoe

c Do not lift pipe using hooks at each end of pipe

5 Repair damage to pipe or protective lining and coating before final acceptance by Owner at no additional cost to Owner

6 Reject pipe with visible cracks and remove from project site

B Cleaning Thoroughly clean and dry interior of pipe and fittings of foreign matter before installation, and keep interior clean until Work has been accepted Keep joint contact surfaces clean until jointing is completed Do not place debris, tools, clothing or other materials in pipe After all pipe laying and joining operations are completed, clean inside of pipe and remove all debris

C Inspection Before installation, inspect each pipe and fitting for defects Reject defective, damaged or unsound pipe and fittings and remove them from site

3 03 EARTHWORK

A Conform to applicable provisions of Section 02227 - Excavation and Backfilling for Utilities and Section 02317 - Augering Pipe for Water Lines.

B Bedding Use bedding materials in conformance with Section 02229 - Utility Backfill Materials and detail in Drawings

C Backfill. Use bank run sand or earth or native soil as specified in Section 02229 - Utility Backfill Materials and in accordance with detail in Drawings

D Place material in uniform layers of prescribed maximum loose thickness and wet or dry material to approximately optimum moisture content Compact to prescribed density. Take laboratory field density tests at Owner's Representative's discretion

E Pipe Zone· Including 6-inch pipe bedding and backfill to 12 inches above top of pipe

3.04 PIPE CUTTING

A Cut pipe 12-inch and smaller with standard wheel pipe cutters Cut pipe larger than 12-inch in manner approved by Owner's Represnetative Make all cuts smooth and at right angles to axis of pipe Bevel plain end with heavy file or grinder to remove sharp edges

3 05 PIPING INSTALLATION

A. Do not lay pipe unless subgrade is free of water. Do not lay pipe when it is raining or when trench is muddy or soft Make adjustments of pipe to line and grade by scraping away subgrade or filling in with granular material Wedging or blocking up bell will not be acceptable

B Do not install pipe at greater depth than its design allows

C Protection of Pipeline· Securely place stoppers or bulkheads in all openings and in end of line when construction is stopped temporarily and at end of each day's work

D For nonmetallic pipe, install magnetic locator tape continuously along the top of the pipe

3 06 JOINTS AND JOINTING

A Rubber Gasketed Bell-and-Spigot Joints (PVC and DIP)

1 Lubricate gaskets with nontoxic water-soluble lubricant before pipe units are joined

2 Fit pipe units together in manner to avoid twisting or otherwise displacing or damaging rubber gasket

3 After the pipe sections are joined, check gaskets to ensure that no displacement of gasket has occurred. If displacement has occurred, remove pipe section and remake joint as for new pipe Remove old gasket, inspect for damage and replace if necessary before remaking joint

4 Where preventing movement of 12" diameter or greater pipe due to thrust is necessary, provide the following restrained joints, or equal

a. Ductile-Iron Pipe

(1). Super-Lock Joint by Clow Corporation

(2) Flex-Ring or Lok-Ring by American Cast Iron Pipe Company

(3). TR-Flex or Field-Lok Joint by U S Pipe and Foundry Company.

b PVC Pipe·

(1) Fittings Series 2000 PV Fitting Restrainer by Ebba Iron, Inc (MEGALUG), or approved equal

(2). Bell and Spigot Series 1600 Joint Restrainer by Ebba Iron, Inc., or approved equal

c Steel Pipe Welded joints (see Part 3.05C)

B. Flanged Joints (DIP, Steel)

1 AWWA C207 Prior to installation of bolts, accurately center and align flanged joints to prevent mechanical prestressing of flanges, pipe and equipment Align bolt holes to straddle vertical, horizontal or north-south centerline Do not exceed 3/64 inch per foot inclination of flange face from true alignment

2 Use full-face gaskets for all flanged joints. Provide 1/8-inch thick cloth inserted rubber gasket material Cut gaskets at the factory to proper dimensions

3. Use galvanized or black nuts and bolts to match flange material Use cadmium-plated steel nuts and bolts underground Tighten bolts progressively

to prevent unbalanced stress Draw bolts tight to ensure proper seating of gaskets.

C Welded Joints (Steel)

1 Joints AWWA C206 Full-fillet, single lap-welded slip type either inside or outside, or double butt-welded type, use automatic or hand welders, provide complete penetration of deposited metal with base metal; provide filler metal suitable for use with base metal, keep inside of fittings and joints free from globules of weld metal which would restrict flow or become loose Do not use mitered joints For interior welded joints, complete backfilling before welding For exterior field-welded joints, provide adequate working room under and beside pipe Use exterior welds for 30-inch and smaller

2 Bell-and-Spigot, Lap-Welded Slip Joints Deflection may be taken at joint by pulling joint up to 3/4 inch as long as 1-1/2-inch minimum lap is maintained Spigot end may be miter cut to take deflections up to 5 degrees as long as proper joint tolerances are maintained Miter end cuts of both ends of butt-welded joints may be used for joint deflections of up to 5 degrees

3 Align piping and equipment so that no part is offset more than 1/8 inch Set all fittings and joints square and true, and preserve alignment during welding operation For butt-welded joints, align abutting ends to minimize offset between surfaces For pipe of same nominal wall thickness, do not exceed 1/16 inch offset Use line-up clamps for this purpose, however, care shall be taken to avoid damage to linings and coatings

4 Protect coal-tar-epoxy lining during welding by draping an 18-inch-wide strip of heat-resistant material over top half of pipe on each side of lining holdback to avoid damage to lining by hot splatter. Protect tape coating similarly if external welding is required

5 Welding Rods· Compatible with metal to be welded to obtain strongest bond, E-70XX

6 Deposit metal in successive layers to provide at least 2 passes or beads for automatic welding and 3 passes or beads for manual welding in completed weld

7 Deposit no more than 1/4 inch of metal on each pass Thoroughly clean each individual pass with wire brush or hammer to remove dirt, slag or flux.

8 Do not weld under any weather condition that would impair strength of weld, such as wet surface, rain or snow, dust or high winds, unless work is properly protected

9 Tack weld of same material and make by same procedure as completed weld Otherwise, remove tack welds during welding operation

10 Remove dirt, scale and other foreign matter from inside piping before tying in sections, fittings or valves

D Joint Grout (Steel)

1 Mix grout by machine except when less than 1/2 cubic yard is required When less than 1/2 cubic yard is required, grout may be hand mixed Mix grout only in quantities for immediate use Use grout within 20 minutes after mixing Discard grout that has set Retempering of grout by any means is not permitted

2. Prepare grout in small batches to prevent stiffening before it is used Any grout which has become so stiff that proper placement cannot be assured without retempering by any means shall be wasted Provide grout for filling grooves of such consistency that it will adhere to ends of pipe

3 Surface Preparation Remove all defective concrete, laitance, dirt, oil, grease and other foreign material from concrete surfaces with wire brush or hammer to sound, clean surface Remove rust and all foreign materials from all metal surfaces in contact with grout

4 Follow established procedures for hot and cold weather concrete placement

5 Complete joint grout operations and backfilling of pipe trenches as closely as practical to pipe laying operations Allow grouted exterior joints to cure at least 1 hour before compacting backfill

6 Grouting exterior joint space Use minimum 9-inch-wide Ethafoam "diaper" or wrapper placed around pipe and over joint Hold wrapper in place on both sides of joint with minimum 5/8-inch-wide steel straps or bands Place no additional bedding or backfill material on either side of pipe until after grout band is filled and grout has mechanically stiffened Pull ends of wrapper together at top of pipe to form access hole Pour grout down one side of pipe until it rises on other side Rod or puddle grout to ensure complete filling of the joint recess Agitate for 15 minutes to allow excess water to seep through joint band When necessary, add more grout to fill joint completely Protect gap at top of joint band from backfill by allowing grout to stiffen or by

covering with a structurally protective material Do not remove band from joint

7 Interior Joints for Pipe Smaller than 24-Inch. Circumferentially butter bell with grout prior to insertion of spigot, strike off flush surplus grout inside pipe by pulling filled burlap bag or inflated ball through pipe with rope

8. Protect exposed interior surfaces of steel joint bands by metallizing, by other approved coatings, or by pointing with grout Joint pointing may be omitted on potable water pipelines if the joint bands are protected by zinc metallizing or other approved protective coatings.

9 Remove and replace all improperly cured or otherwise defective grout at no additional cost to Owner

10 When installed in tunnel or encasement pipe and clearance within casing does not permit outside grout to be placed in normal manner, apply flexible sealer, such as Flex Protex by Gifford-Hill America, or equal, to outside joint prior to joint engagement Clean and prime surfaces receiving sealer in accordance with manufacturer's recommendations Apply sufficient quantities of sealer to assure complete protection of all steel in joint area. Fill interior of joint with grout in normal manner after joint closure

E. Joint Testing·

1 In addition to testing individual joints with feeler gage approximately 1/2-inch wide and 0 015-inch thick, use any other joint testing procedure approved or recommended by pipe manufacturer which will help ensure watertight installation prior to backfilling. These tests shall be made at no additional cost to Owner.

2 On any joint or seam welded after hydrostatic testing or not subjected to hydrostatic testing, test 100 percent of welded joint by methods as described in section on Welded Joints. Owner reserves right to require Contractor to make additional tests at Owner's expense except that if tests performed at Contractor's expense or Owner's expense indicate an unacceptable weld, then cost of test, subsequent repair of rejected weld and test of repaired weld shall be borne by Contractor

F Make curves and bends by deflecting joints or other method as approved by manufacturer and Owner's Representative

1 Deflection of pipe joints shall not exceed maximum deflection recommended by AWWA and pipe manufacturer, unless otherwise indicated on Drawings.

2 If deflection exceeds maximum allowable, the contractor shall remove and install new pipe

3 Contractor shall replace, repair or reapply coatings and linings as required above

4 No additional payment will be made for above described work

5 Assessment of deflection may be measured by Owner at any location along pipe Arithmetical averages of deflection or similar average measurement methods will not be deemed as meeting intent of standard

6 Contractor may submit details of other methods of providing curves and bends for consideration by Owner's Representative, and if deemed satisfactory, shall be installed at no additional cost to Owner.

7 When rubber gasketed pipe is laid on a curve, joint pipe in a straight alignment and then deflect to curved alignment.

G Closures and Field Modifications.

1 Apply welded-wire fabric reinforcement to interior and exterior of all exposed interior and exterior surfaces greater than 6 inches in diameter Welded-wire fabric minimum W1, maximum spacing 2 inches by 4 inches, 3/8 inch from surface of steel plate or middle third of lining or coating thickness for mortar thickness less than 3/4 inch

2 Fill all exposed interior and exterior surfaces with nonshrink grout.

3 07 SECURING, SUPPORTING AND ANCHORING

A Support piping as shown on Drawings and as specified herein, to maintain line and grade and prevent transfer of stress to adjacent structures

B. Where shown on Drawings, anchor pipe fittings and bends installed on water main by welding consecutive joints of pipe together to distance each side of fitting Restrained length, as shown on Drawings, assumes that installation of pipe and subsequent hydrostatic testing begin upstream and proceed downstream, with respect to normal flow of water in pipe If installation and testing differs from this assumption, submit for approval revised method of restraining pipe joints upstream and downstream of device used to test against (block valve, blind flange or dished head plug)

C Provide adequate temporary blocking of fittings when making connections to distribution system and during hydrostatic tests Provide sufficient anchorage and blocking to resist all stresses and forces encountered while tapping existing waterline

3.08 THRUST RESTRAINT

A For new water lines 12 inches in diameter and larger, restrain joints as specified in Part 3 06 A 4 of this section The new water line shall also be additionally restrained with concrete thrust blocking

B For existing waterlines and waterlines less than 12 inches in diameter, restrain pipe joints with concrete thrust blocks or provide joints as specified in Part 3 06A 4 of this section

C Prevent any lateral movement of thrust restraints throughout pressure testing and operation Place 2500 psi concrete conforming to Section 03305, Concrete for Utility Construction, for blocking at each change in direction of existing water lines, and water lines 12 inches in diameter and smaller to brace pipe against undisturbed trench walls Complete placement of concrete blocking, made from Type I cement, 4 days prior to hydrostatic testing of pipeline. Test may be made 2 days after completion of blocking if Type II cement is used

3 09 POLYETHYLENE WRAP

A. Double wrap all ductile iron pipe and appurtenances (except fire hydrants) with 8-mil polyethylene film

B Conform to requirements of Section 02630 - Polyethylene Wrap

3 10 CLEANUP, RESTORATION AND PAYMENT

A Provide "cleanup" and "restoration" crews to work closely behind pipe laying crews, and where necessary, during chlorination, testing, service transfers, abandonment of old mains, backfill and surface restoration

B Upon completion of water line installation in a street and prior to moving to another, chlorinate and pressure test Provide City a sampling point every 1000 L F for testing Begin transfer of services no later than seven calendar days after successful completion of chlorination and pressure testing

C After completion of transfer of services, but no later than 21 calendar days after successful completion of chlorination and pressure testing, begin abandonment of old mains, backfill, resod, and placement of sidewalks and pavements

D Do not begin construction of additional sections if above conditions are not met

3.11 CLEANING PIPING SYSTEMS

A Remove construction debris or foreign material and thoroughly clean and flush piping systems Provide temporary connections, equipment and labor for cleaning

3 12 DISINFECTION OF WATERLINES

A. Conform to requirements of Section 02675 - Disinfection of Waterlines

3 13 FIELD HYDROSTATIC TESTS

A Conform to requirements of Section 02676 - Hydrostatic Testing of Pipelines

END OF SECTION

SECTION 02665

WATER TAP AND SERVICE LINE INSTALLATION

PART 1 GENERAL

1.01 SECTION INCLUDES

A Tapping existing mains and furnishing and installing new service lines for water

1 02 UNIT PRICES

A Measurement for water taps and copper service lines 3/4 inch through 1 inch is on a unit price basis for each installation. Separate measurements will be made for "Short Side" and "Long Side" connections as defined in Part 1.04 below

B. Measurement for water taps and service lines 1-1/2 inch through 2 inch is on a unit price basis for each installation Separate measurements will be made for "Short Side" and "Long Side" connections as defined in Part 1 04 below

C. Payment for "Short Side" and "Long Side" includes locating water main, tap installation and connection to meter and restoring site

D No additional payment will be made for bedding, backfill, compaction, push-unders, etc

1 03 DEFINITIONS

A Short Side Connection. Service line connecting proposed curb stop, located inside water meter box, to water main on same side of street.

B. Long Side Connection Service line connecting proposed curb stop, located inside water meter box, to water main on opposite side of street or from center of streets where supply main is located in street center such as boulevards and streets with esplanades

PART 2 PRODUCTS

2 01 MATERIALS

A. Class 200, Polyethylene, Phillips Drisco pipe or equal

B Corporation Stops· AWWA C800 as modified herein

1 Inlet End AWWA standard thread

2 Valve Body. Tapered plug type, O-ring seat ball type, or rubber seat ball type.

3 Outlet End· Compression type fitting for use with type-K, soft copper

C Provide taps for various water main types and sizes in accordance with following schedule

PIPE TAPPING SCHEDULE				
WATER MAIN TYPE AND DIAMETER	SERVICE SIZE			
	3/4"	1"	1-1/2"	2"
4" Cast Iron or Ductile Iron	DSS,WBSS	DSS, WBSS	DSS,WBSS	DSS, WBSS
4" Asbestos Cement	WBSS	WBSS	DSS, WBSS	DSS, WBSS
4" PVC (AWWA C900)	DSS, WBSS	DSS, WBSS	DSS, WBSS	DSS, WBSS
6" and 8" Cast Iron or Ductile Iron	DSS,WBSS	DSS, WBSS	DSS, WBSS	DSS, WBSS
6" and 8" Asbestos Cement	DSS,WBSS	DSS, WBSS	DSS, WBSS	DSS, WBSS
6" and 8" Cast Iron or Ductile Iron	DSS,WBSS	DSS, WBSS	DSS, WBSS	DSS, WBSS
6" and 8" PVC (AWWA C900)	DSS,WBSS	DSS, WBSS	DSS, WBSS	DSS, WBSS
12" Cast Iron or Ductile Iron	DSS,WBSS	DSS, WBSS	DSS, WBSS	DSS, WBSS
12" Asbestos Cement	DSS,WBSS	DSS, WBSS	DSS, WBSS	DSS, WBSS
12" PVC (AWWA C900)	DSS,WBSS	DSS, WBSS	DSS, WBSS	DSS, WBSS
16" and Up Cast Iron or Ductile Iron	DWBSS	DWBSS	DWBSS	DWBSS
16" and Up Asbestos Cement	DWBSS	DWBSS	DWBSS	DWBSS
16" and Up PVC (AWWA C905)	DWBSS	DWBSS	DWBSS	DWBSS

DSS - DUAL STRAP SADDLES
WBSS - WIDE BAND STRAP SADDLES
DWBSS - DUAL WIDE BAND STRAP SADDLES
*Mueller H-15092, or equal

D. Dual Strap Saddles Red brass body and straps, ductile-iron; vinyl-coated body and straps, or ductile-iron, vinyl-coated body and stainless-steel straps

E Taps for PVC Water Mains. Use dual-strap or single, wide-band strap saddles which provide full support around circumference of pipe and bearing area of sufficient width along axis of pipe, 2 inches minimum, ensuring that pipe will not be distorted when saddle is tightened Romac Series 101N wide-band, stainless-steel tapping saddle with AWWA standard thread (Mueller thread) or equal

F Taps for Steel Pipe· Not allowed, unless specifically approved by Owner's Representative. Use saddle only if tap is approved on steel pipe.

G Curb Stops and Brass Fittings. AWWA C800 as modified herein.

1 Inlet End Compression-type fitting.

2 Valve Body Straight-through or angled, meter-stop design equipped with the following

a O-Ring seal straight plug type.

b Rubber seat ball type.

3 Outlet End Female, iron-pipe thread or swivel-nut, meter-spud thread on 3/4-inch and 1-inch stops and 2-hole flange on 1-1/2 and 2-inch sizes

4 Fittings. Ford or approved equal, use same size open end wrenches and tapping machines as used with respective Ford fittings.

5 Factory Testing of Brass Fittings

a. Submerge in water for 10 seconds at 85 psi with stop in both closed and open positions

b Reject any fitting that shows air leakage Owner may confirm tests locally Entire lot from which samples were taken will be rejected when random sampling discloses unsatisfactory fittings

H Angle Stops In accordance with AWWA C800; ground-key, stop type with bronze lock-wing head stop cap; inlet and outlet threads conform to application tables of AWWA C800, and inlets compression connection

1 Outlet for 3/4-inch and 1-inch size. Meter swivel nut with saddle support

2 Outlet for 1-1/2-inch through 2-inch size O-ring sealed meter flange, iron pipe threads

I Fittings In accordance with AWWA C800 and

1 Castings: Smooth, free from burrs, scales, blisters, sand holes, and defects which would make them unfit for intended use

2 Nuts. Smooth cast and have symmetrical hexagonal wrench flats

3 Thread fittings, of all types, shall have N P T or AWWA threads, and male threaded ends shall be protected in shipment by plastic coating or other equally satisfactory means

4 Compression tube fittings shall have Buna-N beveled gasket.

5 Stamp of manufacturer's name or trademark and size on body

PART 3 E X E C U T I O N

3.01 GENERAL

A. Set service taps at right angles to proposed meter location and locate taps in upper pipe segment within 45 degrees of pipe springline unless otherwise approved by Owner's Representative

B For service lines and lateral connections larger than those allowed in Part 2 01C, branch connections and multiple taps may be used Corporation stops spaced minimum 2 feet apart

C Tapped collars of appropriate sizes. Approved in new construction only provided they are set at right angles to proposed meter location

D All 2-inch and smaller service taps on pressurized water mains Use tapping machine manufactured for pressure tapping purposes.

E Install service lines in open-cut trench in accordance with Section 02227 except service lines under all paved roadways, other paved areas and areas indicated on Drawings shall be installed in bored hole in accordance with paragraph 3 01F If service line is installed under paved roadways or other paved areas, service lines shall be installed in PVC casings.

F Unless otherwise approved by Owner's Representative, lay service lines with minimum of 30 inches of cover as measured from top of curb or, in absence of curbs, from centerline elevation of crowned streets or roads Provide minimum of 18 inches of cover below flow line of all ditches to service lines, unless otherwise approved by Owner's Representative

G Service lines across existing street (push-unders) Pull service line through prepared hole under paving Only full lengths of tubing will be used Take care not to damage copper tubing when pulling it through hole A compression-type union is only permitted if Contractor cannot span underneath pavement with a full length of tubing

Contractor is allowed one compression-type union for each full length of tubing, provided it is not under the pavement.

H Maintain service lines free of dirt and foreign matter at all times

I Install service lines so that top of meter will be 4 to 6 inches below finished grade

J Locate water meters one foot inside street right-of-way, or if this is not applicable, one foot on curb side of sidewalk Contact Owner's Representative when major landscaping or trees conflict with service line and meter box location. No additional payment will be made for work on customer side of meter

3 02 CURB STOP INSTALLATION

A Set curb stops or angle stops at outer end of service line inside of meter box Secure opening in curb stop to prevent unwanted material from entering. In close quarters, make an "S" curve in the field No flattening of tube In all 3/4-inch and 1-inch services, install meter coupling, swivel-nut, or curb stop ahead of meter Install straight meter coupling on outlet end of meter.

3 03 SEQUENCE OF OPERATIONS

A Open trench for proposed service line in accordance with Section 02227.

B. Install curb stop on meter end of service line

C With curb stop open and prior to connecting service line to meter in slack position, open corporation stop and flush service line thoroughly Close curb stop, leaving corporation stop in full-open position

D. Check service line for apparent leaks Repair any leaks before proceeding

E Call to schedule inspection prior to backfilling After inspection, backfill in accordance with Section 02227.

F Install meter box centered over meter with top of lid flush with finished grade. Meter box Refer to Section 02604.

END OF SECTION

SECTION 02667

WET CONNECTIONS

PART 1 GENERAL

1.01 SECTION INCLUDES

A. Wet connections for new water mains and service lines to existing water mains.

1 02 UNIT PRICES

A Measurement for wet connections shown on drawings is on unit price basis for each connection Separate payment will be made for each size of water main

B No extra compensation for damages or extra work resulting from an incomplete shutoff

1 03 DEFINITIONS

A Wet connections consist of isolating sections of pipe to be connected with installed valves, draining the isolated sections, and completing the connections

B Connection of 2 inch or smaller lines, which may be referred to on Drawings as "2 inch standard connections" or "gooseneck connections" will be measured as 2" wet connections This item is not to be used as any part of a 2-inch service line

PART 2 PRODUCTS

2 01 MATERIALS

A Pipe shall conform to requirements of applicable portions of Sections 02610 through 02630

B Corporation stops and saddles shall conform to requirements of Section 02665

C. Valves shall conform to requirements of Section 02640

D Brass fittings shall conform to requirements of AWWA C800.

PART 3 EXECUTION

3 01 GENERAL

A. Plan wet connections in such manner and at such hours as to least inconvenience public. Notify Owner's Representative at least 48 hours in advance of making connections

B Do not operate valves on mains in use by Owner. Owner will handle, at no cost to Contractor, all operations involving opening and closing valves for wet connections

C Conduct connection operations when Inspector is at job site Connection work shall progress without interruption until complete, once existing mains have been cut or plugs has been removed for making connections.

D Water main to be flushed inspected disinfected and tested in accordance with Section 02675

3.02 2-INCH WET CONNECTIONS

A Tap water main Provide and install corporation stops; saddles, copper tubing as required for line and grade adjustment, and brass fittings necessary to adapt to existing main Provide 2-inch valves when indicated on Drawings for 2-inch copper gooseneck connections

END OF SECTION

SECTION 02669

CUT, PLUG AND ABANDONMENT OF MAINS

PART 1 GENERAL

1.01 SECTION INCLUDES

A. Cut, plug and abandonment of water mains

1 02 UNIT PRICES

A Measurement for cut, plug and abandonment of mains is on a unit price basis for each main Separate payment will be made for each size of water main

1 03 SUBMITTALS

A Submittals shall conform to requirements of all provisions and sections of these specifications

B Submit product data for proposed plugs and clamps for approval

PART 2 PRODUCTS

2 01 MATERIALS

A Concrete for reaction blocks Class B conforming to requirements of Section 03305

B. Plugs and clamps shall be suitable for type of pipe to be plugged

PART 3 EXECUTION

3 01 GENERAL

A. Do not begin cut, plug and abandonment operations until replacement main has been constructed, disinfected, and tested, and all service lines have been transferred to replacement main

B Install plug, clamp, and concrete reaction block and make cut at location shown on Drawings.

C Main to be abandoned shall not be valved off and shall not be cut or plugged other than at supply main or as shown on Drawings

D After main to be abandoned has been cut and plugged, check for other sources feeding abandoned main If sources are found, notify Owner's Representative immediately Cut and plug abandoned main at point of other feed as directed by Owner's Representative

E. Plug or cap all ends or openings in abandoned main in an acceptable manner approved by Owner's Representative

F. Remove and dispose of all surface identifications such as valve boxes and fire hydrants Valve boxes in improved streets, other than shell, may be poured full of concrete after removing cap

G Grout fill lines over 12" in diameter and lines remaining under pavement with flowable fill in accordance with Section 02051 No separate payment

H Backfill all excavations in accordance with Section 02227.

I Repair all street surfaces in accordance with Section 02570

END OF SECTION

SECTION 02675

DISINFECTION OF WATERLINES

PART 1 GENERAL

1 01 SECTION INCLUDES

A Disinfection of potable waterlines

1.02 UNIT PRICES

A No payment will be made for disinfection of waterlines Include cost in unit price of waterlines being disinfected

PART 2 PRODUCTS - NOT USED

PART 3 EXECUTION

3.01 GENERAL

A All waterlines constructed shall be promptly disinfected before any tests are conducted on waterlines and before waterlines are connected to water distribution system

B Water for disinfection and flushing will be furnished without charge to Contractor

3.02 PREPARATION

A Furnish all required temporary blind flanges, cast-iron sleeves, plugs, and other items needed to facilitate disinfection of new mains prior to connecting them to water distribution system Normally, each valved section of waterline requires two each 3/4-inch taps. A 2-inch minimum blow-off is required for waterlines up to and including 6-inch diameter

B Fire hydrants shall be used as blow-offs to flush newly constructed waterlines 8-inch diameter and above Where fire hydrants are not available on waterlines, install temporary blow-off valves and remove promptly upon successful completion of disinfection and testing

C. Slowly fill each section of pipe with water in a manner approved by Owner's Representative Average water velocity when filling pipeline should be less than 1 fps and shall not, under any circumstance, exceed 2 fps Before beginning disinfection operations, expel all air from pipeline

D. All excavations made shall be backfilled immediately after installation of risers or blow-offs

E Install blow-off valves at end of main to facilitate flushing at all dead-end water mains Install permanent blow-off valves as per drawing

3 03 DISINFECTION

A Use not less than 100 parts of chlorine per million parts of water Introduce chlorinating material to water lines in accordance with AWWA C651 After contact period of not less than 24 hours, flush system with clean water until residual chlorine is no greater than 1.0 parts per million parts of water Open and close valves in lines being sterilized several times during contact period

B. If a chemical compound is used for a sterilizing agent, it shall be placed in pipes as directed by Owner's Representative

3.04 BACTERIOLOGICAL TESTING

A. After disinfection and flushing of waterlines, bacteriological tests will be performed by Owner or testing laboratory in accordance with Section 01410 - Testing Laboratory Services If test results indicate need for additional disinfection of waterlines based upon Texas Department of Health requirements, Contractor shall perform additional disinfection operations at no additional cost to the Owner

3 05 COMPLETION

A Upon completion of disinfection and testing, remove risers except those approved for use in subsequent hydrostatic testing, and backfill excavation promptly

END OF SECTION

SECTION 02676

HYDROSTATIC TESTING OF PIPELINES

PART 1 GENERAL

1 01 SECTION INCLUDES

A Field hydrostatic testing of new water pipelines

1.02 UNIT PRICES

A No payment will be made for hydrostatic testing of pipelines under this Section Include cost in unit price of pipelines being tested

PART 2 PRODUCTS - NOT USED

PART 3 EXECUTION

3 01 GENERAL

A Hydrostatically test all new water pipelines for liquids after disinfection, if required, and before connecting to water distribution system

B Pipelines shall be tested in lengths between valves, or plugs, of not more than 1,000 feet unless greater length is approved by Owner's Representative.

C. Conduct hydrostatic tests in presence of Owner's Representative in accordance with requirements of this Section

3 02 PREPARATION

A Disinfect water system pipelines prior to hydrostatic testing.

3 03 TEST PROCEDURES

A Furnish, install, and operate connections, pump, meter and gages necessary for hydrostatic testing

B Allow pipeline to sit minimum of 24 hours from time it is initially disinfected until testing begins, to allow pipe wall or lining material to absorb water. Contractor should be aware that periods of up to 7 days may be required for mortar lining to become saturated

C. Expel all air and apply a minimum test pressure of 150 psi as directed by Owner's Representative

D Maintain test pressure for 4 hours. If a large quantity of water is required to maintain pressure during test, testing shall be discontinued until cause of water loss is identified and corrected

3.04 ALLOWABLE LEAKAGE FOR WATER MAINS

A During hydrostatic tests, no leakage will be allowed for sections of water mains consisting of welded joints

B Maximum allowable leakage for water mains with rubber gasketed joints shall be as determined by the following formula.

$$L = \frac{SD(P)^{1/2}}{133,200}$$

C Allowable Leakage per 1000 feet of Pipeline in GAL/HR at 150 psi.

3"	4"	6"	8"	10"	12"	14"	16"	18"	20"	24"	30"	36"
0 25	0 33	0 50	0 66	0 83	0 99	1 16	1 32	1 49	1 66	1 99	2 48	2 98

3 05 CORRECTION FOR FAILED TESTS

A Repair all joints showing visible leaks on surface regardless of total leakage shown on test Check all valves and fittings to ensure that no leakage occurs that could affect or invalidate test Remove any cracked or defective pipes, fittings and valves discovered during pressure test and replace with new items

B Engineer may direct Contractor to disinfect failed lines after repair and prior to retesting. Conduct subsequent disinfection operations in accordance with requirements of Section 02675

C Repeat test until satisfactory results are obtained

3.06 COMPLETION

A Upon satisfactory completion testing, remove risers remaining from disinfection and hydrostatic testing, and backfill excavation promptly

END OF SECTION

SECTION 03305

CONCRETE FOR UTILITY CONSTRUCTION

PART 1 GENERAL

1 01 SECTION INCLUDES

A Cast-in-place concrete work for utility construction or rehabilitation, such as slabs on grade, small vaults, site-cast bases for precast units, cast-in-place manholes, inlets, headwalls and miscellaneous small structures

1 02 UNIT PRICES

A No payment will be made for concrete for utility construction under this Section unless specifically noted in bid documents Include payment in applicable utility structure section

1 03 SUBMITTALS

A Conform to all provisions and sections of these specifications

B Submit proposed mix design and test data for each type and strength of concrete in the Work

C Submit laboratory reports prepared by an independent testing laboratory stating that materials used comply with the requirements of this Section.

D. Submit manufacturer's mill certificates for reinforcing steel Provide specimens for testing when required by the Owner's Representative

E Submit certification from concrete supplier that materials and equipment used to produce and deliver concrete comply with this Specification

F When required on Drawings, submit shop drawings showing reinforcement type, quantity, size, length, location, spacing, bending, splicing, support, fabrication details and other pertinent information

G. For waterstops, submit product information sufficient to indicate compliance with specifications, including manufacturer's descriptive literature and specifications, when required on Drawings

1 04 HANDLING AND STORAGE

A Cement Store cement off of the ground in a well-ventilated weatherproof building

B Aggregate Prevent mixture of foreign materials with aggregate and preserve gradation of aggregate

C Reinforcing Steel Store reinforcing steel to protect it from mechanical injury and formation of rust. Protect epoxy-coated steel from damage to the coating.

PART 2 PRODUCTS

2 01 CONCRETE MATERIALS

A Cementitious Material

1. Portland Cement: ASTM C150, Type II, unless the use of Type III is authorized by the Owner's Representative, or ASTM C595, Type IP For concrete in contact with sewage use Type II cement

2 When aggregates are potentially reactive with alkalis in cement, use cement not exceeding 0 6 percent alkali content in the form of $Na_2O + 0.658K_20$

B Water Clean, free from harmful amounts of oils, acids, alkalis or other deleterious substances, and meeting requirements of ASTM C94.

C Aggregate

1 Coarse Aggregate ASTM C33. Unless otherwise indicated, use the following ASTM standard sizes· No 357 or No 467, No 57 or No 67, No. 7 Maximum size. Not larger than 1/5 of the narrowest dimension between sides of forms, nor larger than 3/4 of minimum clear spacing between reinforcing bars

2 Fine Aggregate ASTM C33.

3. Determine the potential reactivity of fine and coarse aggregate in accordance with the Appendix to ASTM C33

D Air Entraining Admixtures ASTM C260.

E Chemical Admixtures

1 Water Reducers ASTM C494, Type A.

2. Water Reducing Retarders· ASTM 494, Type D.

3 High Range Water Reducers (Superplasticizers) ASTM C494, Types F and G

F Prohibited Admixtures Admixtures containing calcium chloride, thiocyanate, or materials that contribute free chloride ions in excess of 0 1 percent by weight of cement

G Reinforcing Steel

1 Use new billet steel bars conforming to ASTM A615, ASTM A767, or ASTM A775, grade 40 or grade 60, as shown on Drawings Use deformed bars except where smooth bars are specified When placed in work, keep steel free of dirt, scale, loose or flaky rust, paint, oil or other harmful materials

2 Where shown, use welded wire fabric with wire conforming to ASTM A185 or ASTM A884 Supply the gage and spacing shown, with longitudinal and transverse wires electrically welded together at points of intersection with welds strong enough not to be broken during handling or placing

3. Wire ASTM A82 Use 16-1/2 gage minimum for tie wire, unless otherwise indicated

H Fiber

1 Polypropylene Fiber.

a Ratio· 1 5 pounds of fiber per cubic yard of concrete.

b Physical Properties

(1) Material Polypropylene

(2) Length: 3/4 inch

(3) Specific Gravity 0 91

(4) Absorption None

(5) Tensile Strength 70-110 Ksi

(6) Modulus of Elasticity 500 Ksi

(7) Melt Point 140 degrees F (60 degrees C)

(8) Flash Point. 932 degrees F (500 degrees C)

(9) Density 3 pounds/cubic yard

c Acceptable Manufacturer W R Grace Company, Fibermesh, or approved equal

I Curing Compounds Type 2 white-pigmented liquid membrane-forming compounds conforming to ASTM C309

2 02 FORMWORK MATERIALS

A Lumber and Plywood Seasoned and of good quality, free from loose or unsound knots, knot holes, twists, shakes, decay and other imperfections which would affect strength or impair the finished surface of concrete Use S4S lumber for facing or sheathing Forms for bottoms of caps At least 2-inch (nominal) lumber, or 3/4-inch form plywood backed adequately to prevent misalignment. General use· Provide lumber of 1-inch nominal thickness or form plywood of approved thickness

B Formwork for Exposed Concrete Indicated to Receive Rubbed Finish Form or form-lining surfaces free of irregularities; plywood of 1/4-inch minimum thickness, preferably oiled at the mill.

C Chamfer Strips and Similar Moldings Redwood, cypress or pine that will not split when nailed and which can be maintained to true line Use mill-cut molding dressed on all faces

D Form Ties Metal or fiberglass of approved type with tie holes not larger than 7/8 inch in diameter Do not use wire ties or snap ties.

E Metal Forms· Clean and in good condition, free from dents and rust, grease or other foreign material that tend to disfigure or discolor concrete in a gage and condition capable of supporting concrete and construction loads without significant distortion Countersink bolt and rivet heads on facing sides Use only metal forms which present a smooth surface and which line up properly

2 03 PRODUCTION METHODS

A. Use either ready-mixed concrete conforming to requirements of ASTM C94, or concrete produced by volumetric batching and continuous mixing in accordance with ASTM C685

2 04 MEASUREMENT OF MATERIALS

A Measure dry materials by weight, except volumetric proportioning may be used when concrete is batched and mixed in accordance with ASTM C685

B Measure water and liquid admixtures by volume

2 05 DESIGN MIX

A Use design mixes prepared by a certified testing laboratory in accordance with ASTM C1077 and conforming to requirements of this section

B Proportion concrete materials based on ACI 211 1 to comply with durability and strength requirements of ACI 318, Chapters 4 and 5, and this specification Prepare mix design of Class A concrete so minimum cementitious content is 564 pounds per cubic yard. Submit concrete mix designs to the Owner's Representative for review

C Proportioning on the basis of field experience or trial mixtures in accordance with the requirements at Section 5.3 of ACI 318 may be used, if approved by the Owner's Representative.

D Classification, unless shown otherwise on plans

Class	Type	**Minimum** Compressive Strength (Lbs/sq in) 7-Day	28-Day	Maximum W/C Ratio (Percent)	Air Content (Percent)	Consistency Range in Slump (Inches)
A	Structural	3200	4000	0 45	4 +/- 1%	2 to 4*
B	Pipe Block Fill, Thrust Block	----	2500	----	4 +/- 1%	5 to 7

* When ASTM C494, Type F or TYPE G admixture is used to increase workability, this range may be 6 to 9

** Construction drawings govern

E Add polypropylene fibers only when called for on the Drawings or in another section of these Specifications.

F Determine air content in accordance with ASTM C138, ASTM C173 or ASTM C231

G Use of Concrete Classes Use classes of concrete as indicated on the drawings and other specifications Use Class B for un-reinforced concrete used for plugging pipes, seal slabs, thrust blocks, trench dams, and concrete fill unless indicated otherwise Use Class A for all other applications

2 06 PVC WATERSTOPS

A Extrude from virgin polyvinyl chloride elastomer Use no reclaimed or scrap material Submit waterstop manufacturer's current test reports and manufacturer's written certification that the material furnished meets or exceeds Corps of Engineers Specification CRD-C572 and other specified requirements.

B Flat Strip and Center-Bulb Waterstops: As detailed, and as manufactured by Kirkhill Rubber Co , Brea, California; Water Seals, Inc , Chicago, Illinois, Progress Unlimited, Inc , New York, New York, Greenstreak Plastic Products Co , St Louis, Missouri, or equal acceptable to the Owner's Representative, provided that at no place shall waterstop thickness be less than 3/8 inch

2 07 RESILIENT WATERSTOP

A Resilient waterstop, where called for on the Drawings, shall be either a bentonite or adhesive type material.

B Bentonite Waterstop

1 Material 75 percent bentonite, mixed with butyl rubber-hydrocarbon containing less than 1.0 percent volatile matter, and free of asbestos fibers or asphaltics

2 Manufacturer's rated temperature ranges. For application, 5 to 125 degrees F; in service, -40 to 212 degrees F

3 Cross-sectional dimensions, unexpanded waterstop 1 inch by 3/4 inch

4 Provide with adhesive backing capable of producing excellent adhesion to concrete surfaces

C Adhesive Waterstop

1 Adhesive waterstop shall be at least 2 inches in diameter and shall be Synko-Flex preformed plastic adhesive waterstop by Synko-Flex Products, Inc , or equal The waterstop shall meet or exceed requirements of Federal Specification SS-S-210A

2 The adhesive waterstop shall be supplied wrapped completely by a two part protective paper

3 The adhesive waterstop material shall have independent laboratory tests verifying that the material seals joints in concrete against leakage when subjected to a minimum of 30 psi water pressure for at least 72 hours

4 Primer, to be used on hardened concrete surfaces, shall be provided by the same manufacturer as the waterstop material

PART 3 E X E C U T I O N

3.01 FORMS AND SHORING

A Provide mortar-tight forms sufficient in strength to prevent bulging between supports Set and maintain forms to lines designated such that finished dimensions of structures are within the tolerances specified in ACI 117 Construct forms to permit removal without damage to concrete. Forms may be given slight draft to permit ease of removal Provide adequate cleanout openings Before placing concrete, remove extraneous matter from within forms

B Install rigid shoring having no excessive settlement or deformation Use sound timber in shoring centering Shim to adjust and tighten shoring with hardwood timber wedges

C Design Loads for Horizontal Surfaces of Forms and Shoring Minimum fluid pressure, 175 pounds per cubic foot, live load, 50 pounds per square foot. Maximum unit stresses 125 percent of allowable stresses used for form materials and for design of support structures

D Back formwork with a sufficient number of studs and wales to prevent deflection

E. Re-oil or lacquer the liner on the job before using Facing may be constructed of 3/4-inch plywood made with waterproof adhesive backed by adequate studs and wales. In such cases, form lining will not be required

F Unless otherwise indicated, form outside corners and edges with triangular 3/4-inch chamfer strips (measured on sides)

G. Remove metal form ties to depth of at least 3/4 inch from surface of concrete Do not burn off ties Do not use pipe spreaders Remove spreaders which are separate from forms as concrete is being placed.

H Treat facing of forms with approved form coating before concrete is placed When directed by the Owner's Representative, treat both sides of face forms with coating Apply coating before reinforcement is placed Immediately before the concrete is placed, wet surface of forms which will come in contact with concrete

3 02 PLACING REINFORCEMENT

A Place reinforcing steel accurately in accordance with approved Drawings Secure steel adequately in position in forms to prevent misalignment Maintain reinforcing steel in place using approved concrete and hot-dip galvanized metal chairs and spacers. Place reinforcing steel in accordance with CRSI Publication "Placing Reinforcing Bars " Request inspection of reinforcing steel by the Owner's Representative and obtain acceptance before concrete is placed.

B Minimum spacing center-to-center of parallel bars 2-1/2 times nominal bar diameter Minimum cover measured from surface of concrete to face of reinforcing bar unless shown otherwise on the Drawings· 3 inches for surfaces cast against soil or subgrade, 2 inches for other surfaces

C Detail bars in accordance with ACI 315 Fabricate reinforcing steel in accordance with CRSI Publication MSP-1, "Manual of Standard Practice " Bend reinforcing steel to required shape while steel is cold Excessive irregularities in bending will be cause for rejection

D Do not splice bars without written approval of the Owner's Representative Approved bar bending schedules or placing drawings constitute written approval

Splice and development length of bars shall conform to ACI 318, Chapters 7 and 12, and as shown on Drawings Stagger splices or locate at points of low tensile stress

3 03 EMBEDDED ITEMS

A Install conduit and piping as shown on Drawings Accurately locate and securely fasten conduit, piping and other embedded items in forms

B Install waterstops as specified in other sections and according to manufacturer's instructions. Securely position waterstops at joints as indicated on Drawings. Protect waterstops from damage or displacement during concrete placing operations

3 04 BATCHING, MIXING AND DELIVERY OF CONCRETE

A. Measure, batch, mix, and deliver ready-mixed concrete in accordance with ASTM C94, Sections 8 through 11 Produce ready-mixed concrete using an automatic batching system as described in NRMCA Concrete Plant Standards, Part 2 - Plant Control Systems

B. Measure, mix and deliver concrete produced by volumetric batching and continuous mixing in accordance with ASTM C685, Sections 6 though 8

C. Maintain concrete workability without segregation of material and excessive bleeding Obtain approval of the Owner's Representative before adjustment and change of mix proportions

D Ready-mixed concrete delivered to the site shall be accompanied by batch tickets providing the information required by ASTM C94, Section 16 Concrete produced by continuous mixing shall be accompanied by batch tickets providing the information required by ASTM C685, Section 14

E Clean, maintain and operate equipment so that it thoroughly mixes material as required

F Hand-mix only when approved by the Owner's Representative

3 05 PLACING CONCRETE

A Give sufficient advance notice to the Owner's Representative(at least 24 hours prior to commencement of Operations) to permit inspection of forms, reinforcing steel, embedded items and other preparations for placing concrete Place no concrete prior to the Owner's Representative 's approval

B Schedule concrete placing to permit completion of finishing operations in daylight hours However, if necessary to continue after daylight hours, light the site as required. If rainfall occurs after placing operations are started, provide covering to protect the Work

C When adverse weather conditions affect quality of concrete, postpone concrete placement Do not place concrete when the air temperature is at or below 40 degrees F and falling Concrete may be placed when temperature is 35 degrees F and rising. Take temperature readings in the shade, away from artificial heat Protect concrete from temperatures below 32 degrees F until the concrete has cured for a minimum of 3 days at 70 degrees F or 5 days at 50 degrees F

When concrete temperature is 85 degrees F or above, do not exceed 60 minutes between introduction of cement to the aggregates and discharge. When the weather is such that the concrete temperature would exceed 90 degrees F, employ effective means, such as pre-cooling of aggregates and mixing water, using ice or placing at night, as necessary to maintain concrete temperature, as placed, below 90 degrees F

D Use troughs, pipes and chutes lined with approved metal or synthetic material in placing concrete so that concrete ingredients are not separated Keep chutes, troughs and pipes clean and free from coatings of hardened concrete Allow no aluminum material to be in contact with concrete

E Limit free fall of concrete to 4 feet Do not deposit large quantities of concrete at one location so that running or working concrete along forms is required Do not jar forms after concrete has taken on initial set, do not place any strain on projecting reinforcement or anchor bolts

F Use tremies for placing concrete in walls and similar narrow or restricted locations Use tremies made in sections, or provide in several lengths, so that outlet may be adjusted to proper height during placing operations

G Place concrete in continuous horizontal layers approximately 12 inches thick Place each layer while layer below is still plastic

H Compact each layer of concrete with concrete spading implements and mechanical vibrators of approved type and adequate number for the size of placement When immersion vibrators cannot be used, use form vibrators Apply vibrators to concrete immediately after depositing Move the vibrator vertically through the layer of concrete just placed and several inches into plastic layer below Do not penetrate or disturb layers previously placed which have partially set. Do not use vibrators to aid lateral flow concrete Closely supervise consolidation to ensure uniform insertion and duration of immersion.

I. Handling and Placing Concrete. Conform to ACI 302 1R, ACI 304R and ACI 309R

3 06 WATERSTOPS

A Embed waterstops in concrete across joints as shown Waterstops shall be continuous for the extent of the joint, make splices necessary to provide such continuity in accordance with manufacturer's instructions Support and protect waterstops during construction operations, repair or replace waterstops damaged during construction

B. Install waterstops in concrete on one side of joints, leaving other side exposed until the next pour When a waterstop will remain exposed for 2 days or more, shade and protect the exposed waterstop from direct rays of the sun during the entire exposure and until the exposed portion of the waterstop is embedded in concrete

C. Splicing PVC Waterstops

1 Splice waterstops by heat-sealing adjacent waterstop sections in accordance with the manufacturer's printed instructions.

2 Butt end-to-end joints of 2 identical waterstop sections may be made in the forms during placement of waterstop material

3 Prior to placement in formwork, prefabricate all waterstop joints involving more than two ends to be joined together, an angle cut, an alignment change, or the joining of two dissimilar waterstop sections, allowing not less than 24-inch long strips of waterstop material beyond the joint Upon inspection and approval by the Owner's Representative, install prefabricated waterstop joint assemblies in formwork, and butt-weld ends of the 24-inch strips to the straight-run portions of waterstop in the forms

D Setting PVC Waterstops

1. Correctly position waterstops during installation Support and anchor waterstops during progress of the work to ensure proper embedment in concrete and to prevent folding over of the waterstop by concrete placement Locate symmetrical halves of waterstops equally between concrete pours at joints, with center axis coincident with joint openings Thoroughly work concrete in joint vicinity for maximum density and imperviousness

2 Where a waterstop in a vertical wall joint does not connect with any other waterstop, and is not intended to be connected to a waterstop in a future concrete placement, terminate the waterstop 6 inches below the top of the wall

E Replacement of Defective Field Joints· Replace waterstop field joints showing evidence of misalignment, offset, porosity, cracks, bubbles, inadequate bond or other defects with products and joints complying the Contract Documents

F Resilient Waterstop.

1. Install resilient waterstop in accordance with manufacturer's instructions and recommendations except as otherwise indicated and specified

2. When requested by the Owner's Representative, provide technical assistance by manufacturer's representative in the field at no additional cost to the Owner

3 Use resilient waterstop only where complete confinement by concrete is provided, do not use in expansion or contraction joints.

4 Where resilient waterstop is used in combination with PVC waterstop, lap resilient waterstop over PVC waterstop a minimum of 6 inches and place in contact with the PVC waterstop Where crossing PVC at right angles, melt PVC ribs to form a smooth joining surface.

5 At the free top of walls without connecting slabs, stop the resilient waterstop and grooves (where used) 6 inches from the top in vertical wall joints

6 Bentonite Waterstop

a Locate bentonite waterstop as near as possible to the center of the joint and extend continuous around the entire joint Minimum distance from edge of waterstop to face of member 5 inches

b Where thickness of the concrete member to be placed on the bentonite waterstop is less than 12 inches, place waterstop in grooves at least 3/4 inch deep and 1-1/4 inches wide formed or ground into the concrete Minimum distance from edge of waterstop placed in groove to face of member: 2.5 inches

c Do not place bentonite waterstop when waterstop material temperature is below 40 degrees F Waterstop material may be warmed so that it remains above 40 degrees F during placement but means used to warm it shall in no way harm the material or its properties. Do not install waterstop where air temperature falls outside manufacturer's recommended range

d Place bentonite waterstop only on smooth and uniform surfaces, grind concrete smooth if necessary to produce satisfactory substrate, or bond waterstop to irregular surfaces using an epoxy grout which completely fills voids and irregularities beneath the waterstop material Prior to installation, wire brush the concrete surface to remove laitance and other substances that may interfere with bonding of epoxy

e In addition to the adhesive backing provided with the waterstop, secure bentonite waterstop in place with concrete nails and washers at 12-inch maximum spacing

7 Adhesive Waterstop

a Thoroughly clean the concrete surface on which the waterstop is to be placed with a wire brush and coat with primer

b If the surface is too rough to allow the waterstop to form a complete contact, grind to form an adequately smooth surface

c Install the waterstop with the top protective paper left in place Overlap joints between strips a minimum of 1 inch and cover back over with the protective paper

d Do not remove protective paper until just before final formwork completion Concrete shall be placed immediately. The time that the waterstop material is uncovered prior to concrete placement shall be minimized and shall not exceed 24 hours.

3 07 CONSTRUCTION JOINTS

A Definitions

1 Construction joint Contact surface between plastic (fresh) concrete and concrete that has attained initial set

2 Monolithic. Manner of concrete placement to reduce or eliminate construction joints; joints other than those indicated on Drawings will not be permitted without written approval of the Owner's Representative Where so approved, make additional construction joints with details equivalent to those indicated for joints in similar locations.

B Preparation for Construction Joints Roughen surface of concrete previously placed, leaving some aggregate particles exposed. Remove laitance and loose materials by sandblasting or high-pressure water blasting Keep surface wet for several hours prior to placing of plastic concrete

3 08 CURING

A Comply with ACI 308 Cure by preventing loss of moisture, rapid temperature change and mechanical injury for a period of 7 curing days when Type II or IP cement has been used and for 3 curing days when Type III cement has been used Start curing as soon as free water has disappeared from the concrete surface after placing and finishing. A curing day is any calendar day in which the temperature is above 50 degrees F for at least 19 hours Colder days may be counted if air temperature adjacent to concrete is maintained above 50 degrees F In continued cold weather, when artificial heat is not provided, removal of forms and shoring may be permitted at the end of calendar days equal to twice the required number of curing days However, leave soffit forms and shores in place until concrete has reached the specified 28-day strength, unless directed otherwise by the Owner's Representative

B Cure formed surfaces not requiring rub-finished surface by leaving forms in place for the full curing period Keep wood forms wet during the curing period Add water as needed for other types of forms Or, at Contractor's option, forms may be removed after 2 days and curing compound applied

C Rubbed Finish·

1 At formed surfaces requiring rubbed finish, remove forms as soon as practicable without damaging the surface.

2 After rub-finish operations are complete, continue curing formed surfaces by using either approved curing/sealing compounds or moist cotton mats until normal curing period is complete

D. Unformed Surfaces: Cure by membrane curing compound method

1 After concrete has received a final finish and surplus water sheen has disappeared, immediately seal surface with a uniform coating of approved curing compound, applied at the rate of coverage recommended by manufacturer or as directed by the Owner's Representative. Do not apply less than 1 gallon per 180 square feet of area. Provide satisfactory means to properly control and check rate of application of the compound

2 Thoroughly agitate the compound during use and apply by means of approved mechanical power pressure sprayers equipped with atomizing nozzles For application on small miscellaneous items, hand-powered spray equipment may be used. Prevent loss of compound between nozzle and concrete surface during spraying operations

3 Do not apply compound to a dry surface. If concrete surface has become dry, thoroughly moisten surface immediately prior to application At locations where coating shows discontinuities, pinholes or other defects, or if rain falls on a newly coated surface before film has dried sufficiently to resist damage, apply an additional coat of compound at the specified rate of coverage.

3 09 REMOVAL OF FORMS AND SHORING

A Remove forms from surfaces requiring rubbing only as rapidly as rubbing operation progresses. Remove forms from vertical surfaces not requiring rub-finish when concrete has aged for the required number of curing days When curing compound is used, do not remove forms before 2 days after concrete placement,

B. Leave soffit forms and shores in place until concrete has reached the specified 28-day strength, unless directed otherwise by the Owner's Representative

3 10 DEFECTIVE WORK

A Immediately repair any defective work discovered after forms have been removed If concrete surface is bulged, uneven, or shows excess honeycombing or form marks which cannot be repaired satisfactorily through patching, remove and replace the entire section

3 11 FINISHING

A Patch honeycomb, minor defects and form tie holes in concrete surfaces with cement mortar mixed one part cement to two parts fine aggregate. Repair defects by cutting out unsatisfactory material and replacing with new concrete, securely keyed and bonded to existing concrete. Finish to make junctures between patches and existing concrete as inconspicuous as possible Use a stiff mixture and thoroughly tamp into place After each patch has stiffened sufficiently to allow for greatest portion of shrinkage, strike off mortar flush with the surface

B Apply a rubbed finish to exposed surfaces of formed concrete structures as noted on Drawings After pointing has set sufficiently, wet the surface with a brush and perform first surface rubbing with No. 16 carborundum stone or equal Rub sufficiently to bring surface to paste, to remove form marks and projections, and to produce a smooth, dense surface. Add cement to form surface paste as necessary Spread or brush material, which has been ground to paste, uniformly over surface and allow to reset In preparation for final acceptance, clean surfaces and perform final finish rubbing with No 30 carborundum stone or equal After rubbing, allow paste on the surface to reset, then wash surface with clean water Leave structure with a clean, neat and uniform-appearing finish.

C Apply a wood float finish to concrete slabs

3 12 FIELD QUALITY CONTROL

A. Testing shall be performed under provisions of Section 01410 - Testing Laboratory Services

B Unless otherwise directed by the Owner's Representative, the following minimum testing of concrete is required Testing shall be performed by qualified individuals employed by an approved independent testing agency, and conform to the requirements of ASTM C1077

1. Take concrete samples in accordance with ASTM C172

2 Make one set of four compression test specimens for each mix design at least once per day and for each 150 cubic yards or fraction thereof Make, cure and test the specimens in accordance with ASTM C31 and ASTM C39

3 When taking compression test specimens, test each sample for slump according to ASTM C143, for temperature according to ASTM C1064, for air content according to ASTM C231, and for unit weight according to ASTM C138

4 Inspect, sample and test concrete in accordance with ASTM C94, Section 13, 14 and 15, and ACI 311-5R

C Test Cores Conform to ASTM C42

D Testing High Early Strength Concrete. When Type III cement is used in concrete, the specified 7-day and 28-day compressive strengths shall be applicable at 3 and 7 days, respectively

E If 7-day or 3-day test strengths (as applicable for type of cement being used) fail to meet established strength requirements, extended curing or resumed curing on those portions of structure represented by test specimens may be required If additional curing fails to produce the required strength, strengthening or replacement of portions of structure which fail to develop required strength may be required by the Owner's Representative, at no additional cost to the Owner

3 13 PROTECTION

A Protect concrete against damage until final acceptance by the Owner

B Protect fresh concrete from damage due to rain, hail, sleet, or snow. Provide such protection while the concrete is still plastic, and whenever such precipitation is imminent or occurring

C Do not backfill around concrete structures or subject them to design loadings until all components of the structure needed to resist the loading are complete and have reached the specified 28-day compressive strength, except as authorized otherwise by the Owner's Representative

END OF SECTION

SECTION VI
PLANS

AGENDA ITEM #30a2

THE COUNTY OF GALVESTON

RUFUS CROWDER, CPPO CPPB
PURCHASING AGENT

COUNTY COURTHOUSE
722 Moody (21st Street)
Fifth (5th) Floor
GALVESTON, TEXAS 77550
(409) 770-5371

GWEN MCLAREN, CPPB
ASST PURCHASING AGENT

July 17, 2012

Honorable County Judge
And Commissioners' Court
County Courthouse
Galveston, Texas

Re: Bid #B122027, Inmate Clothing and Supplies

Gentlemen,

On July 19, 2012, bids were opened in my office for Bid #B122027, Inmate Clothing and Supplies at which time nine (9) bids were received from the following companies

- Robinson Textiles, Inc — Gardena, California
- Bob Barker Company, Inc — Fuquay-Varina, North Carolina
- Charm-Tex — Brooklyn, New York
- Carolina Textiles — Charlotte, North Carolina
- ICS Jail Supplies, Inc — Waco, Texas
- Tabb Textiles Co , Inc — Opelika, Alabama
- Acme Supply Co , Ltd — Glen Cove, New York
- Uniforms Manufacturing, Inc — Scottsdale, Arizona
- American Textile Systems — Cerritos, California

It is requested that you award this bid as follows

Section I – Bedding	ICS Jail Supplies, Inc
Section II – Work shirts and Pants	Robinson Textiles, Inc
Section III – Recreational Clothing	Bob Barker Company
Section IV – Undergarments	Charm-Tex
Section V – Footwear	ICS Jail Supplies, Inc
Section VI – Towels and Linens	American Textiles
Section VII – Laundry Items and Accessories	Bob Barker Company
Section VIII – BDU Trousers	No Award

Your consideration in this matter will be greatly appreciated

Respectfully submitted,

Rufus G Crowder, CPPO, CPPB
Purchasing Agent
County of Galveston

Attachments

JUVENILE JUSTICE DEPARTMENT

County of Galveston
(PROBATION and DETENTION SERVICES)

August 6, 2012

Rufus Crowder, CPPB
Purchasing Agent
722 Moody, 5th Floor
Galveston, Texas 77550

Re Bid #B122027 (Inmate Clothing & Supplies)

Dear Mr Crowder

I have reviewed the bids which were submitted for the Inmate Clothing & Supplies Bid (#B122027) It is our recommendation that the bid be distributed/awarded as follows (see attached spreadsheet)

Section I	Bedding	ICS Jail Supplies
Section II	Work Shirts & Pants	(see below)
Section III	Recreational Clothing	Bob Barker Company
Section IV	Undergarments	Charm-Tex
Section V	Footwear	ICS Jail Supplies
Section VI	Towels & Linens	American Textiles
Section VII	Laundry Items & Accessories	Bob Barker Company
Section VIII	BDU Trousers	(see below)

With regards to Section II (Work Shirts & Pants), Robinson Textiles were the low bid vendor for the section by a significant amount (Robinson Textiles - $146,447 05 / Bob Barker Company - $164,408 64) However, for the past year and a half we have had significant problems (see attached documents) with Robinson Textiles being able to fulfill their orders in a timely manner if at all and even with the quality of product they have delivered I would like to recommend that the bid be awarded to Bob Barker Company, however, if this is not possible due to significant price difference between 1st and 2nd is there a way that stipulations can be put on this section of the bid that if the problems continue with Robinson Textiles they can be disqualified and the section be given to the 2nd lowest bid (Bob Barker Company)

With regards to Section VIII (BDU Trousers), we had asked that this section be part of the bid, however, due to contraband security issues (multiple pockets) the department has decided to use the work pants which are already included in Section II of the bid. Bob Barker Company would have been the low bid company for this section, however, only 3 vendors bid on this section and

MAIN OFFICE
4101 Atwater Avenue
Texas City, Texas 77590
(409) 770-5200
FAX (409) 770-5978

JERRY LESMOND JUVENILE JUSTICE CENTER
Brent E. Norris, Director
MAILING ADDRESS
101 Atwater Avenue
Dickinson, Texas 77539

GALVESTON OFFICE
722 Moody, 6th Floor
Galveston, Texas 77550
(409) 766-2476
FAX (409) 765-2618

none of them met the specifications that the pants were to include a "snap closure" The trousers which were bid were all button closure (not snap) No award on this section of the bid

Sincerely,

Gail Maxwell

Gail Maxwell,
Financial Analyst
(409) 770-5904
(409) 765-3187 (Fax)

gm
Attachments
Cc Darla McCullough, Administrative Coordinator/P-Card Administrator

INMATE SERVICES

TO: Darla McCullough
Purchasing
From: Sgt. Thomas Casey
RE· Bids

DATE: 08/08/2012

We have looked at all the bids you sent to us Because of past business we have had with our present vendors we recommend that we continue to use them. We have received good service and timely delivery on most items ordered. Also they are quick to respond to any question we may have and help solve problems as they arise

We recommend the following for clothing and linen needs.

1. Bob Barker
2. Charm-Tex
3 Robinson Textiles

Respectfully,

Sgt Casey

BID RESPONSE TABULATION
INMATE CLOTHING AND SUPPLIES
GALVESTON COUNTY, TEXAS

BID #: B122027
OPEN: 07/17/2012
2:00 PM

Item	Product Cod	Description	Quantity	Units	Vendor 021303 BOB BARKER CO INC		Vendor. 184358 ROBINSON TEXTILES INC		Vendor. 408401 ICS JAIL SUPPLIES INC	
					Unit Price	Extended	Unit Price	Extended	Unit Price	Extended
0001	85012	COTTON YEAR ROUND THERMAL BLANKET 100% cotton snag free closed weave blanket Preshrunk 6" selvaged sides and stitched ends to prevent dismantling Color to be white	1,000	EA	6 30	6,300 00	0 00	0 00	5 21	5,210 00
0002	85012	BLANKETS, 100% FIBER WOVEN POLYESTER Using center scrim that binds fibers together Tightly woven, will not pill, shred or mat even after washing 66" x 90" Color to be	48	EA	10 73	515 04	0 00	0 00	5 25	252 00
0003	85052	MATTRESS COVER - VINYL To be made of "Healthguard" anti-microbial vinyl material, made from heavy duty vinyl, fire retardant, tear resistant, antibacterial Seams for	450	EA	10 58	4,761 00	0 00	0 00	10 94	4,923 00
0004	85052	MATTRESS COVERS TWILL Slip on mattress cover Cover is a green color Twill 65% polyester, 35% combed cotton industrial finish fabric for maximum durability in	1,000	EA	21 00	21,000 00	0 00	0 00	6 44	6,440 00
0005	85063	PILLOWS FABRIC COVERED MICRO GUARD Size 20" x 26", white in color	40	EA	5 87	234 80	0 00	0 00	280 00	11,200 00
0006	85064	CLOTH PILLOW CASES WHITE IN COLOR	8	DZ	8 44	67 52	0 00	0 00	95 92	767 36
0007	20085	V-NECK WORK SHIRTS - SMALL V-neck slip-on reglan sleeve No buttons One pocket over left breast double needle lock stitched and bartacked All seams three (3) needle felled	1,625	EA	4 50	7,312 50	3 90	6,337 50	5 75	9,343 75

BID RESPONSE TABULATION
INMATE CLOTHING AND SUPPLIES
GALVESTON COUNTY, TEXAS

BID #: B122027
OPEN: 07/17/2012
2.00 PM

0008	20085	V-NECK WORK SHIRTS - MEDIUM	1,625	EA	4 50	7,312 50	3 90	6,337 50	5 75	9,343 75
0009	20085	V-NECK WORK SHIRTS - LARGE	1,625	EA	5 00	8,125 00	4 80	7,800 00	5 75	9,343 75
0010	20085	V-NECK WORK SHIRTS - X-LARGE	1,625	EA	5 00	8,125 00	4 80	7,800 00	5 75	9,343 75
0011	20085	V-NECK WORK SHIRTS - XXLARGE	1,625	EA	5 15	8,368 75	4 80	7,800 00	5 75	9,343 75
0012	20085	V-NECK WORK SHIRTS - XXXLARGE	1,625	EA	5 45	8,856 25	4 80	7,800 00	7 25	11,781 25
0013	20085	V-NECK WORK SHIRTS 4X-LARGE	1,625	EA	5 90	9,587 50	4 80	7,800 00	7 25	11,781 25
0014	20085	V-NECK WORK SHIRTS - 5X-LARGE	1,625	EA	6 10	9,912 50	4 80	7,800 00	7 25	11,781 25
0015	20085	V-NECK WORK SHIRTS - SMALL MENS V-neck slip-on reglan sleeve No buttons One pocket over left breast double needle lock stitched and bartacked All seams three (3) needle felled	4	EA	4 50	18 00	3 90	15 60	5 75	23 00
0016	20085	V-NECK WORK SHIRTS - MEDIUM - MENS	8	EA	4 50	36 00	3 90	31 20	5 75	46 00
0017	20085	V-NECK WORK SHIRTS - LARGE - MENS	8	EA	5 00	40 00	4 80	38 40	5 75	46 00
0018	20085	V-NECK WORK SHIRTS X-LARGE - MENS	8	EA	5 00	40 00	4 80	38 40	5 75	46 00
0019	20085	V-NECK WORK SHIRTS - XXLARGE - MENS	4	EA	5 15	20 60	4 80	19 20	5 75	23 00
0020	20092	WORK PANTS - XSMALL - MENS Slip on elastic wasit with mock fly Elastic to be woven 1 1/2" heat resistant 26 gauge rubber, four rows of lock stitched to pants (chain	1,735	EA	5 00	8,675 00	4 50	7,807 50	5 75	9,976 25
0021	20092	WORK PANTS - SMALL MENS	1,735	EA	5 00	8,675 00	4 50	7,807 50	5 75	9,976 25
0022	20092	WORK PANTS - MEDIUM - MENS	1,735	EA	5 00	8,675 00	4 50	7,807 50	5 75	9,976 25
0023	20092	WORK PANTS - LARGE - MENS	1,735	EA	5 75	9,976 25	5 40	9,369 00	5 75	9,976 25
0024	20092	WORK PANTS - XLARGE - MENS	1,735	EA	5 75	9,976 25	5 40	9,369 00	5 75	9,976 25
0025	20092	WORK PANTS - XXLARGE - MENS	1,735	EA	6 00	10,410 00	5 40	9,369 00	5 75	9,976 25

BID RESPONSE TABULATION
INMATE CLOTHING AND SUPPLIES
GALVESTON COUNTY, TEXAS

BID #: B122027
OPEN: 07/17/2012
2:00 PM

0026	20092	WORK PANTS - XXXLARGE - MENS	1,735	EA	6 00	10,410 00	5 40	9,369 00	7 25	12,578 75
0027	20092	WORK PANTS - 4XLARGE - MENS	1,735	EA	6 24	10,826 40	5 40	9,369 00	7 25	12,578 75
0028	20092	WORK PANTS - 5XLARGE - MENS	1,735	EA	6 64	11,520 40	5 40	9,369 00	7 25	12,578 75
0029	20092	WORK PANTS - 6XLARGE - MENS	175	EA	7 22	1,263 50	6 75	1,181 25	9 00	1,575 00
0030	20092	WORK PANTS - 7XLARGE - MENS	175	EA	7 22	1,263 50	6 75	1,181 25	9 00	1,575 00
0031	20092	WORK PANTS - 8XLARGE - MENS	175	EA	7 44	1,302 00	7 25	1,268 75	9 00	1,575 00
0032	20092	WORK PANTS - 9XLARGE - MENS	175	EA	7 44	1,302 00	7 25	1,268 75	9 00	1,575 00
0033	20092	WORK PANTS - 10XLARGE - MENS	175	EA	7 58	1,326 50	7 25	1,268 75	9 00	1,575 00
0034	20092	JUMPSUIT WITH SNAP CLOSURE - SMALL Triple stitch seam construction Heavy duty thread Elasticized waistband Reinforcing bartacks, color coded size labels Bias and seams to be	4	EA	10 00	40 00	11 00	44 00	11 99	47 96
0035	20092	JUMPSUIT WITH SNAP CLOSURE - MEDIUM	8	EA	10 00	80 00	11 00	88 00	11 99	95 92
0036	20092	JUMPSUIT WITH SNAP CLOSURE - LARGE	12	EA	10 60	127 20	11 00	132 00	11 99	143 88
0037	20092	JUMPSUIT WITH SNAP CLOSURE - XLARGE	18	EA	11 00	198 00	11 00	198 00	11 99	215 82
0038	20092	JUMPSUIT WITH SNAP CLOSURE - XXLARGE	18	EA	11 32	203 76	11 00	198 00	11 99	215 82
0039	20092	JUMPSUIT WITH SNAP CLOSURE - XXXLARGE	12	EA	11 84	142 08	11 00	132 00	11 99	143 88
0040	20092	JUMPSUIT WITH SNAP CLOSURE - 4XLARGE	8	EA	12 32	98 56	11 00	88 00	14 50	116 00
0041	20092	JUMPSUIT WITH SNAP CLOSURE - 5XLARGE	4	EA	12 88	51 52	11 00	44 00	14 50	58 00
0042	20092	JUMPSUIT WITH SNAP CLOSURE - 6XLARGE	4	EA	13 70	54 80	11 00	44 00	14 50	58 00
0043	20092	JUMPSUIT WITH SNAP CLOSURE - 7XLARGE	4	EA	14 08	56 32	14 00	56 00	14 50	58 00
0044	20070	100% COTTON T-SHIRTS - MEDIUM - MENS	6	DZ	19 77	118 62	0 00	0 00	15 00	90 00
0045	20070	100% COTTON T-SHIRTS - LARGE - MENS	12	DZ	19 77	237 24	0 00	0 00	15 00	180 00

BID RESPONSE TABULATION
INMATE CLOTHING AND SUPPLIES
GALVESTON COUNTY, TEXAS

BID #: B122027
OPEN: 07/17/2012
2:00 PM

0046	20070	100% COTTON T-SHIRTS - XLARGE - MENS	12	DZ	20 04	240 48	0 00	0 00	15 00	180 00
0047	20070	100% COTTON T-SHIRT - XXLARGE - MENS	4	DZ	22 56	90 24	0 00	0 00	19 00	76 00
0048	20070	100% COTTON T-SHIRTS - XXXLARGE - MENS	4	DZ	23 96	95 84	0 00	0 00	19 00	76 00
0049	20010	SWEATPANTS - SMALL COLOR TO BE NAVY	8	EA	5 98	47 84	0 00	0 00	6 96	55 68
0050	20010	SWEATPANTS - MEDIUM COLOR TO BE NAVY	12	EA	6 57	78 84	0 00	0 00	6 96	83 52
0051	20010	SWEATPANTS - LARGE COLOR TO BE NAVY	12	EA	6 57	78 84	0 00	0 00	6 96	83 52
0052	20010	SWEATPANTS - XLARGE COLOR TO BE NAVY	12	EA	6 57	78 84	0 00	0 00	6 96	83 52
0053	20010	SWEATPANTS - XXLARGE COLOR TO BE NAVY	8	EA	7 48	59 84	0 00	0 00	7 89	63 12
0054	20010	SWEATPANTS - XXXLARGE COLOR TO BE NAVY	4	EA	7 69	30 76	0 00	0 00	8 15	32 60
0055	20010	CREW NECK SWEATSHIRT - MEDIUM COLOR TO BE GRAY	8	EA	5 75	46 00	0 00	0 00	6 96	55 68
0056	20010	CREW NECK SWEATSHIRT - LARGE COLOR TO BE GREY	12	EA	5 75	69 00	0 00	0 00	6 96	83 52
0057	20010	CREW NECK SWEATSHIRT - XLARGE COLOR TO BE GREY	12	EA	5 75	69 00	0 00	0 00	6 96	83 52
0058	20010	CREW NECK SWEATSHIRT - XXLARGE COLOR TO BE GREY	8	EA	6 58	52 64	0 00	0 00	7 89	63 12
0059	20010	CREW NECK SWEATSHIRT - XXXLARGE COLOR TO BE GREY	4	EA	6 58	26 32	0 00	0 00	8 15	32 60
0060	20010	CREW NECK SWEATSHIRT - MEDIUM ORANGE IN COLOR LOGO ON BACK "TLC"	10	EA	6 57	65 70	0 00	0 00	8 43	84 30

BID RESPONSE TABULATION
INMATE CLOTHING AND SUPPLIES
GALVESTON COUNTY, TEXAS

BID #: B122027
OPEN: 07/17/2012
2:00 PM

0061	20010	CREW NECK SWEATSHIRT - LARGE ORANGE IN COLOR LOGO ON BACK "TLC"	10	EA	6 57	65 70	0 00	0 00	8 43	84 30
0062	20010	CREW NECK SWEATSHIRT - XLARGE ORANGE IN COLOR LOGO ON BACK "TLC"	5	EA	6 57	32 85	0 00	0 00	8 43	42 15
0063	20010	CREW NECK SWEATSHIRT - XXLARGE ORANGE IN COLOR LOGO ON BACK "TLC"	3	EA	7 48	22 44	0 00	0 00	9 21	27 63
0064	20010	JERSEY KNIT PRACTICE SHORTS - MEDIUM Triple sewn, soft cotton/poly blend jersey knit 6" inseam with covered elastic waistband No pockets or drawstrings Navy in color	24	EA	4 16	99 84	0 00	0 00	8 27	198 48
0065	20010	JERSEY KNIT PRACTICE SHORTS - LARGE	24	EA	4 16	99 84	0 00	0 00	8 27	198 48
0066	20010	JERSEY KNIT PRACTICE SHORTS - XLARGE	36	EA	4 16	149 76	0 00	0 00	8 27	297 72
0067	20010	JERSEY KNIT PRACTICE SHORTS - 2XLARGE	24	EA	4 16	99 84	0 00	0 00	9 45	226 80
0068	20010	JERSEY KNIT PRACTICE SHORTS - 3XLARGE	8	EA	4 16	33 28	0 00	0 00	10 96	87 68
0069	20151	MENS SOCKS SOLID CREWS ONE SIZE FITS ALL 80% COTTON, 20% SYNTHETIC WHITE IN COLOR	50	DZ	5 14	257 00	0 00	0 00	5 65	282 50
0070	20187	MENS BRIEFS POLYESTER/COTTON BLEND - MEDIUM - WHITE IN COLOR	12	DZ	10 28	123 36	0 00	0 00	11 00	132 00
0071	20187	MENS BRIEFS POLYESTER/COTTON BLEND LARGE - WHITE IN COLOR	18	DZ	10 66	191 88	0 00	0 00	11 00	198 00
0072	20187	MENS BRIEFS POLYESTER/COTTON BLEND XLARGE - WHITE IN COLOR	12	DZ	11 14	133 68	0 00	0 00	11 00	132 00
0073	20187	MENS BRIEFS POLYESTER/COTTON BLEND 2XLARGE - WHITE IN COLOR	8	DZ	11 66	93 28	0 00	0 00	13 00	104 00

BID RESPONSE TABULATION
INMATE CLOTHING AND SUPPLIES
GALVESTON COUNTY, TEXAS

BID #: B122027
OPEN: 07/17/2012
2:00 PM

0074	20187	MENS BRIEFS POLYESTER/COTTON BLEND 3XLARGE - WHITE IN COLOR	4	DZ	12 66	50 64	0 00	0 00	13 00	52 00
0075	20186	WOMENS PANTIES KNITTED ELASTIC WAIST & LEG BANDS SIZE 6 - WHITE IN COLOR	4	DZ	7 80	31 20	0 00	0 00	8 50	34 00
0076	20186	WOMENS PANTIES KNITTED WAIST & LEG BANDS SIZE 7 - WHITE IN COLOR	8	DZ	8 00	64 00	0 00	0 00	8 50	68 00
0077	20186	WOMENS PANTIES KNITTED WAIST & LEG BANDS SIZE 8 - WHITE IN COLOR	8	DZ	8 00	64 00	0 00	0 00	8 50	68 00
0078	20186	WOMENS PANTIES KNITTED WAIST & LEG BANDS SIZE 9 - WHITE IN COLOR	4	DZ	8 50	34 00	0 00	0 00	8 50	34 00
0079	20186	WOMENS PANTIES KNITTED ELASTIC WAIST & LEG BAND SIZE 10 - WHITE IN COLOR	4	DZ	8 50	34 00	0 00	0 00	8 50	34 00
0080	20186	SPORTS BRA - SMALL (32 A/B) Hookless pull-on style No metal or plastic Wide, non-slip straps, racer-style back White in color	16	EA	1 70	27 20	0 00	0 00	2 86	45 76
0081	20186	SPORTS BRA - MEDIUM (34 A/B)	48	EA	1 70	81 60	0 00	0 00	2 86	137 28
0082	20186	SPORTS BRA - LARGE (36 A/B)	36	EA	1 70	61 20	0 00	0 00	2 86	102 96
0083	20186	SPORTS BRA - XLARGE (38 A/B)	12	EA	1 70	20 40	0 00	0 00	2 86	34 32
0084	20186	SPORTS BRA XXLARGE (40-42 B,C&D)	12	EA	1 70	20 40	0 00	0 00	3 00	36 00
0085	80048	SLIP ON TENNIS SHOES - SIZE 5 Heavy weight navy blue canvas uppers White rubber around sole Insoles stitched in place USA made only	1,200	PR	3 28	3,936 00	0 00	0 00	2 94	3,528 00
0086	80048	SLIP ON TENNIS SHOES - SIZE 6	1,200	PR	3 28	3,936 00	0 00	0 00	2 94	3,528 00

BID RESPONSE TABULATION
INMATE CLOTHING AND SUPPLIES
GALVESTON COUNTY, TEXAS

BID #: B122027
OPEN: 07/17/2012
2:00 PM

0087	80048	SLIP ON TENNIS SHOES - SIZE 7	1,200	PR	3 28	3,936 00	0 00	0 00	2 94	3,528 00
0088	80048	SLIP ON TENNIS SHOES - SIZE 8	1,200	PR	3 28	3,936 00	0 00	0 00	2 94	3,528 00
0089	80048	SLIP ON TENNIS SHOES - SIZE 9	1,200	PR	3 28	3,936 00	0 00	0 00	2.94	3,528 00
0090	80048	SLIP ON TENNIS SHOES - SIZE 10	1,200	PR	3 28	3,936 00	0 00	0 00	2 94	3,528 00
0091	80048	SLIP ON TENNIS SHOES - SIZE 11	1,200	PR	3 28	3,936 00	0 00	0 00	2 94	3,528 00
0092	80048	SLIP ON TENNIS SHOES - SIZE 12	1,200	PR	3 28	3,936 00	0 00	0 00	2.94	3,528 00
0093	80048	SLIP ON TENNIS SHOES - SIZE 13	1,200	PR	3 28	3,936 00	0 00	0 00	2 94	3,528 00
0094	80048	SLIP ON TENNIS SHOES - SIZE 14	1,200	PR	3 28	3,936 00	0 00	0 00	2.94	3,528 00
0095	80048	SLIP ON TENNIS SHOES - SIZE 15	1,200	PR	3 28	3,936 00	0 00	0 00	2 94	3,528 00
0096	80032	SLIP ON SANDALS SIZE SMALL Biochek Antimicrobial PVC Skid resistant sole to reduce risk of falls on wet floors Burgundy in color	1,710	PR	2 09	3,573 90	0 00	0 00	1 92	3,283 20
0097	80032	SLIP ON SANDALS SIZE MEDIUM	1,710	PR	2 09	3,573 90	0 00	0 00	1 92	3,283 20
0098	80032	SLIP ON SANDALS SIZE LARGE	1,710	PR	2 09	3,573 90	0 00	0 00	1 92	3,283 20
0099	80032	SLIP ON SANDALS SIZE XLARGE	1,710	PR	2 09	3,573 90	0 00	0 00	1.92	3,283 20
0100	80032	SLIP ON SANDALS SIZE XXLARGE	1,710	PR	2 09	3,573 90	0 00	0 00	1 92	3,283 20
0101	80032	SLIP ON SANDALS SIZE 3XLARGE	1,710	PR	2 09	3,573 90	0 00	0 00	1 92	3,283 20
0102	80032	SLIP ON SANDALS SIZE SIZE 5-6 (SMALL)	1,710	PR	1 88	3,214 80	0 00	0 00	1.92	3,283 20
0103	80032	SLIP ON SANDALS SIZE 7-8 (MEDIUM)	1,710	PR	1 88	3,214 80	0 00	0 00	1 92	3,283 20
0104	80032	SLIP ON SANDALS SIZE 9-10 (LARGE)	1,710	PR	1 88	3,214 80	0 00	0 00	1 92	3,283 20
0105	80032	SLIP ON SANDALS SIZE 11-12 (XLARGE)	1,710	PR	1 88	3,214 80	0 00	0 00	1 92	3,283 20
0106	80032	SLIP ON SANDALS SIZE 13-14 (XXLARGE)	1,710	PR	1 88	3,214 80	0 00	0 00	1 92	3,283 20

BID RESPONSE TABULATION
INMATE CLOTHING AND SUPPLIES
GALVESTON COUNTY, TEXAS

BID #: B122027
OPEN: 07/17/2012
2:00 PM

0107	95405	TOWELS HEAVY OR PREMIUM WEIGHT 100% MINIMUM 5 5 LBS PER DOZEN, WHITE IN COL IMPORTED OR DOMESTIC PRE-PACKAGED 25 DOZEN PER CASE 20" X 40" IN SIZE	600	DZ	14 40	8,640 00	0 00	0 00	14 66	8,796 00
0108	85092	WASHCLOTHS HEAVY OR PREMIUM WEIGHT 12" X 12" WHITE BATH WASHCLOTH	100	DZ	1 94	194 00	0 00	0 00	1 92	192 00
0109	61586	VINYL ID WASHABLE TAGS, 1000/ROLL	2	ROLL	12 00	24 00	0 00	0 00	129 86	259 72
0110	51080	NETS, TIE CORD LAUNDRY 24" X 36"	12	DZ	22 00	264 00	0 00	0 00	37 80	453 60
0111	20044	BDU TROUSERS - SMALL/REGULAR Military inspired construction, six (6) pockets, four (4) with button flaps Adjustable waist tab with four (4) bartacks Zipper fly with snap closure	6	EA	20 68	124 08	0 00	0 00	28 75	172 50
0112	20044	BDU TROUSER - MEDIUM/REGULAR Color to be Navy	15	EA	20 68	310 20	0 00	0 00	28 75	431 25
0113	20044	BDU TROUSER - LARGE/REGULAR Color to be Navy	15	EA	20 68	310 20	0 00	0 00	28 75	431 25
0114	20044	BDU TROUSER - XLARGE/REGULAR Color to be Navy	6	EA	20 68	124 08	0 00	0 00	28 75	172 50
0115	20044	BDU TROUSER - 2XLARGE/REGULAR Color to be Navy	4	EA	20 68	82 72	0 00	0 00	31 25	125 00
				Total of all Items		**291,551.11**		**146,447.05**		**307,682.67**

BID RESPONSE TABULATION
INMATE CLOTHING AND SUPPLIES
GALVESTON COUNTY, TEXAS

BID #: B122027
OPEN: 07/17/2012
2:00 PM

Item	Product Cod	Description	Quantity	Units	Vendor: 700956 CHARM-TEX		Vendor 706274 ACME SUPPLY CO LTD		Vendor. 714680 CAROLINA TEXTILES	
					Unit Price	Extended	Unit Price	Extended	Unit Price	Extended
0001	85012	COTTON YEAR ROUND THERMAL BLANKET 100% cotton snag free closed weave blanket Preshrunk 6" selvaged sides and stitched ends to prevent dismantling Color to be white	1,000	EA	7 18	7,180 00	5 50	5,500 00	6 53	6,530 00
0002	85012	BLANKETS, 100% FIBER WOVEN POLYESTER Using center scrim that binds fibers together Tightly woven, will not pill, shred or mat even after washing 66" x 90" Color to be	48	EA	8 90	427 20	0 00	0 00	7 09	340 32
0003	85052	MATTRESS COVER - VINYL To be made of "Healthguard" anti-microbial vinyl material, made from heavy duty vinyl, fire retardant, tear resistant, antibacterial Seams for	450	EA	11 54	5,193 00	0 00	0 00	0 00	0 00
0004	85052	MATTRESS COVERS TWILL Slip on mattress cover Cover is a green color Twill 65% polyester, 35% combed cotton industrial finish fabric for maximum durability in	1,000	EA	6 18	6,180 00	0 00	0 00	0 00	0 00
0005	85063	PILLOWS FABRIC COVERED MICRO GUARD Size 20" x 26", white in color	40	EA	5 18	207 20	0 00	0 00	0 00	0 00
0006	85064	CLOTH PILLOW CASES WHITE IN COLOR	8	DZ	8 90	71 20	9 00	72 00	0 00	0 00
0007	20085	V-NECK WORK SHIRTS - SMALL V-neck slip-on reglan sleeve No buttons One pocket over left breast double needle lock stitched and bartacked All seams three (3) needle felled	1,625	EA	0 00	0 00	0 00	0 00	0 00	0 00

BID RESPONSE TABULATION
INMATE CLOTHING AND SUPPLIES
GALVESTON COUNTY, TEXAS

BID #: B122027
OPEN: 07/17/2012
2:00 PM

0008	20085	V-NECK WORK SHIRTS - MEDIUM	1,625	EA	0 00	0 00	0 00	0 00	0 00	0 00
0009	20085	V-NECK WORK SHIRTS - LARGE	1,625	EA	0 00	0 00	0 00	0 00	0 00	0 00
0010	20085	V-NECK WORK SHIRTS - X-LARGE	1,625	EA	0 00	0 00	0 00	0 00	0 00	0 00
0011	20085	V-NECK WORK SHIRTS - XXLARGE	1,625	EA	0 00	0 00	0 00	0 00	0 00	0 00
0012	20085	V-NECK WORK SHIRTS - XXXLARGE	1,625	EA	0 00	0 00	0 00	0 00	0 00	0 00
0013	20085	V-NECK WORK SHIRTS 4X-LARGE	1,625	EA	0 00	0 00	0 00	0 00	0 00	0 00
0014	20085	V-NECK WORK SHIRTS - 5X-LARGE	1,625	EA	0 00	0 00	0 00	0 00	0 00	0 00
0015	20085	V-NECK WORK SHIRTS - SMALL MENS V-neck slip-on reglan sleeve No buttons One pocket over left breast double needle lock stitched and bartacked All seams three (3) needle felled	4	EA	0 00	0 00	0 00	0 00	0 00	0 00
0016	20085	V-NECK WORK SHIRTS - MEDIUM - MENS	8	EA	0 00	0 00	0 00	0 00	0 00	0 00
0017	20085	V-NECK WORK SHIRTS - LARGE - MENS	8	EA	0 00	0 00	0 00	0 00	0 00	0 00
0018	20085	V-NECK WORK SHIRTS X-LARGE - MENS	8	EA	0 00	0 00	0 00	0 00	0 00	0 00
0019	20085	V-NECK WORK SHIRTS - XXLARGE - MENS	4	EA	0 00	0 00	0 00	0 00	0 00	0 00
0020	20092	WORK PANTS - XSMALL - MENS Slip on elastic wasit with mock fly Elastic to be woven 1 1/2" heat resistant 26 gauge rubber, four rows of lock stitched to pants (chain	1,735	EA	0 00	0 00	0 00	0 00	0 00	0 00
0021	20092	WORK PANTS - SMALL MENS	1,735	EA	0 00	0 00	0 00	0 00	0 00	0 00
0022	20092	WORK PANTS - MEDIUM - MENS	1,735	EA	0 00	0 00	0 00	0 00	0 00	0 00
0023	20092	WORK PANTS - LARGE - MENS	1,735	EA	0 00	0 00	0 00	0 00	0 00	0 00
0024	20092	WORK PANTS - XLARGE - MENS	1,735	EA	0 00	0 00	0 00	0 00	0 00	0 00
0025	20092	WORK PANTS - XXLARGE - MENS	1,735	EA	0 00	0 00	0 00	0 00	0 00	0 00

BID RESPONSE TABULATION
INMATE CLOTHING AND SUPPLIES
GALVESTON COUNTY, TEXAS

BID #: B122027
OPEN. 07/17/2012
2:00 PM

0026	20092	WORK PANTS - XXXLARGE - MENS	1,735	EA	0 00	0 00	0 00	0 00	0 00	0 00
0027	20092	WORK PANTS - 4XLARGE - MENS	1,735	EA	0 00	0 00	0 00	0 00	0 00	0 00
0028	20092	WORK PANTS - 5XLARGE - MENS	1,735	EA	0 00	0 00	0 00	0 00	0 00	0 00
0029	20092	WORK PANTS - 6XLARGE - MENS	175	EA	0 00	0 00	0 00	0 00	0 00	0 00
0030	20092	WORK PANTS - 7XLARGE - MENS	175	EA	0 00	0 00	0 00	0 00	0 00	0 00
0031	20092	WORK PANTS - 8XLARGE - MENS	175	EA	0 00	0 00	0 00	0 00	0 00	0 00
0032	20092	WORK PANTS - 9XLARGE - MENS	175	EA	0 00	0 00	0 00	0 00	0 00	0 00
0033	20092	WORK PANTS - 10XLARGE - MENS	175	EA	0 00	0 00	0 00	0 00	0 00	0 00
0034	20092	JUMPSUIT WITH SNAP CLOSURE - SMALL Triple stitch seam construction Heavy duty thread. Elasticized waistband Reinforcing bartacks, color coded size labels Bias and seams to be	4	EA	0 00	0 00	0 00	0 00	0 00	0 00
0035	20092	JUMPSUIT WITH SNAP CLOSURE - MEDIUM	8	EA	0 00	0 00	0 00	0 00	0 00	0 00
0036	20092	JUMPSUIT WITH SNAP CLOSURE - LARGE	12	EA	0 00	0 00	0 00	0 00	0 00	0 00
0037	20092	JUMPSUIT WITH SNAP CLOSURE - XLARGE	18	EA	0 00	0 00	0 00	0 00	0 00	0 00
0038	20092	JUMPSUIT WITH SNAP CLOSURE - XXLARGE	18	EA	0 00	0 00	0 00	0 00	0 00	0 00
0039	20092	JUMPSUIT WITH SNAP CLOSURE - XXXLARGE	12	EA	0 00	0 00	0 00	0 00	0 00	0 00
0040	20092	JUMPSUIT WITH SNAP CLOSURE - 4XLARGE	8	EA	0 00	0 00	0 00	0 00	0 00	0 00
0041	20092	JUMPSUIT WITH SNAP CLOSURE - 5XLARGE	4	EA	0 00	0 00	0 00	0 00	0 00	0 00
0042	20092	JUMPSUIT WITH SNAP CLOSURE - 6XLARGE	4	EA	0 00	0 00	0 00	0 00	0 00	0 00
0043	20092	JUMPSUIT WITH SNAP CLOSURE - 7XLARGE	4	EA	0 00	0 00	0 00	0 00	0 00	0 00
0044	20070	100% COTTON T-SHIRTS - MEDIUM - MENS	6	DZ	0 00	0 00	0 00	0 00	18 67	112 02
0045	20070	100% COTTON T-SHIRTS - LARGE - MENS	12	DZ	0 00	0 00	0 00	0 00	18 67	224 04

BID RESPONSE TABULATION
INMATE CLOTHING AND SUPPLIES
GALVESTON COUNTY, TEXAS

BID #: B122027
OPEN: 07/17/2012
2:00 PM

0046	20070	100% COTTON T-SHIRTS - XLARGE - MENS	12	DZ	0 00	0 00	0 00	0 00	18 67	224 04
0047	20070	100% COTTON T-SHIRT - XXLARGE - MENS	4	DZ	0 00	0 00	0 00	0 00	28 67	114 68
0048	20070	100% COTTON T-SHIRTS - XXXLARGE - MENS	4	DZ	0 00	0 00	0 00	0 00	29 78	119 12
0049	20010	SWEATPANTS - SMALL COLOR TO BE NAVY	8	EA	0 00	0 00	0 00	0 00	6 89	55 12
0050	20010	SWEATPANTS - MEDIUM COLOR TO BE NAVY	12	EA	0 00	0 00	0 00	0 00	6 89	82 68
0051	20010	SWEATPANTS - LARGE COLOR TO BE NAVY	12	EA	0 00	0 00	0 00	0 00	6 89	82 68
0052	20010	SWEATPANTS - XLARGE COLOR TO BE NAVY	12	EA	0 00	0 00	0 00	0 00	6 89	82 68
0053	20010	SWEATPANTS - XXLARGE COLOR TO BE NAVY	8	EA	0 00	0.00	0 00	0 00	7 44	59 52
0054	20010	SWEATPANTS - XXXLARGE COLOR TO BE NAVY	4	EA	0 00	0 00	0 00	0 00	7 44	29 76
0055	20010	CREW NECK SWEATSHIRT - MEDIUM COLOR TO BE GRAY	8	EA	0 00	0 00	0 00	0 00	5 32	42 56
0056	20010	CREW NECK SWEATSHIRT - LARGE COLOR TO BE GREY	12	EA	0 00	0 00	0 00	0 00	5 32	63 84
0057	20010	CREW NECK SWEATSHIRT - XLARGE COLOR TO BE GREY	12	EA	0 00	0 00	0 00	0 00	5 32	63 84
0058	20010	CREW NECK SWEATSHIRT - XXLARGE COLOR TO BE GREY	8	EA	0 00	0 00	0 00	0 00	6 10	48 80
0059	20010	CREW NECK SWEATSHIRT - XXXLARGE COLOR TO BE GREY	4	EA	0 00	0 00	0 00	0 00	6 10	24 40
0060	20010	CREW NECK SWEATSHIRT - MEDIUM ORANGE IN COLOR LOGO ON BACK "TLC"	10	EA	0 00	0 00	0 00	0 00	0 00	0 00

BID RESPONSE TABULATION
INMATE CLOTHING AND SUPPLIES
GALVESTON COUNTY, TEXAS

BID #: B122027
OPEN: 07/17/2012
2:00 PM

0061	20010	CREW NECK SWEATSHIRT - LARGE ORANGE IN COLOR LOGO ON BACK "TLC"	10	EA	0 00	0 00	0 00	0 00	0 00	0 00
0062	20010	CREW NECK SWEATSHIRT - XLARGE ORANGE IN COLOR LOGO ON BACK "TLC"	5	EA	0 00	0 00	0 00	0 00	0 00	0 00
0063	20010	CREW NECK SWEATSHIRT - XXLARGE ORANGE IN COLOR LOGO ON BACK "TLC"	3	EA	0 00	0 00	0 00	0 00	0 00	0 00
0064	20010	JERSEY KNIT PRACTICE SHORTS - MEDIUM Triple sewn, soft cotton/poly blend jersey knit 6" inseam with covered elastic waistband No pockets or drawstrings Navy in color	24	EA	0 00	0 00	0 00	0 00	0 00	0 00
0065	20010	JERSEY KNIT PRACTICE SHORTS - LARGE	24	EA	0 00	0 00	0 00	0 00	0 00	0 00
0066	20010	JERSEY KNIT PRACTICE SHORTS - XLARGE	36	EA	0 00	0 00	0 00	0 00	0 00	0 00
0067	20010	JERSEY KNIT PRACTICE SHORTS - 2XLARGE	24	EA	0 00	0 00	0 00	0 00	0 00	0 00
0068	20010	JERSEY KNIT PRACTICE SHORTS - 3XLARGE	8	EA	0 00	0 00	0 00	0 00	0 00	0 00
0069	20151	MENS SOCKS SOLID CREWS ONE SIZE FITS ALL 80% COTTON, 20% SYNTHETIC WHITE IN COLOR	50	DZ	5 90	295 00	5 00	250 00	5 11	255 50
0070	20187	MENS BRIEFS POLYESTER/COTTON BLEND - MEDIUM - WHITE IN COLOR	12	DZ	9 90	118 80	12 00	144 00	9 72	116 64
0071	20187	MENS BRIEFS POLYESTER/COTTON BLEND LARGE - WHITE IN COLOR	18	DZ	9 90	178 20	12 00	216 00	9 72	174 96
0072	20187	MENS BRIEFS POLYESTER/COTTON BLEND XLARGE - WHITE IN COLOR	12	DZ	9 90	118 80	12 00	144 00	9 72	116 64
0073	20187	MENS BRIEFS POLYESTER/COTTON BLEND 2XLARGE - WHITE IN COLOR	8	DZ	9 90	79 20	12 00	96 00	10 83	86 64

BID RESPONSE TABULATION
INMATE CLOTHING AND SUPPLIES
GALVESTON COUNTY, TEXAS

BID #. B122027
OPEN: 07/17/2012
2:00 PM

0074	20187	MENS BRIEFS POLYESTER/COTTON BLEND 3XLARGE - WHITE IN COLOR	4	DZ	10 90	43 60	12 00	48 00	11 94	47 76
0075	20186	WOMENS PANTIES KNITTED ELASTIC WAIST & LEG BANDS SIZE 6 - WHITE IN COLOR	4	DZ	7 90	31 60	10 00	40 00	9 00	36 00
0076	20186	WOMENS PANTIES KNITTED WAIST & LEG BANDS SIZE 7 - WHITE IN COLOR	8	DZ	7 90	63 20	10 00	80 00	9 00	72 00
0077	20186	WOMENS PANTIES KNITTED WAIST & LEG BANDS SIZE 8 - WHITE IN COLOR	8	DZ	7 90	63 20	10 00	80 00	9 00	72 00
0078	20186	WOMENS PANTIES KNITTED WAIST & LEG BANDS SIZE 9 - WHITE IN COLOR	4	DZ	7 90	31 60	10 00	40 00	10 08	40 32
0079	20186	WOMENS PANTIES KNITTED ELASTIC WAIST & LEG BAND SIZE 10 - WHITE IN COLOR	4	DZ	8 90	35 60	10 00	40 00	10 08	40 32
0080	20186	SPORTS BRA - SMALL (32 A/B) Hookless pull-on style No metal or plastic Wide, non-slip straps, racer-style back White in color	16	EA	1 82	29 20	0 00	0 00	1 93	30 88
0081	20186	SPORTS BRA - MEDIUM (34 A/B)	48	EA	1 82	87 60	0 00	0 00	1 93	92 64
0082	20186	SPORTS BRA - LARGE (36 A/B)	36	EA	1 82	65 70	0 00	0 00	1 93	69 48
0083	20186	SPORTS BRA - XLARGE (38 A/B)	12	EA	1 82	21 90	0 00	0 00	1 93	23 16
0084	20186	SPORTS BRA XXLARGE (40-42 B,C&D)	12	EA	1 82	21 90	0 00	0 00	2 03	24 36
0085	80048	SLIP ON TENNIS SHOES - SIZE 5 Heavy weight navy blue canvas uppers White rubber around sole Insoles stitched in place USA made only	1,200	PR	3 90	4,680 00	0 00	0 00	0 00	0 00
0086	80048	SLIP ON TENNIS SHOES - SIZE 6	1,200	PR	3 90	4,680 00	0 00	0 00	0 00	0 00

BID RESPONSE TABULATION
INMATE CLOTHING AND SUPPLIES
GALVESTON COUNTY, TEXAS

BID #: B122027
OPEN: 07/17/2012
2:00 PM

0087	80048	SLIP ON TENNIS SHOES - SIZE 7	1,200	PR	3 90	4,680 00	0 00	0 00	0 00	0 00
0088	80048	SLIP ON TENNIS SHOES - SIZE 8	1,200	PR	3 90	4,680 00	0 00	0 00	0 00	0 00
0089	80048	SLIP ON TENNIS SHOES - SIZE 9	1,200	PR	3 90	4,680 00	0 00	0 00	0 00	0 00
0090	80048	SLIP ON TENNIS SHOES - SIZE 10	1,200	PR	3 90	4,680 00	0 00	0 00	0 00	0 00
0091	80048	SLIP ON TENNIS SHOES - SIZE 11	1,200	PR	3 90	4,680 00	0 00	0 00	0 00	0 00
0092	80048	SLIP ON TENNIS SHOES - SIZE 12	1,200	PR	3 90	4,680 00	0 00	0 00	0 00	0 00
0093	80048	SLIP ON TENNIS SHOES - SIZE 13	1,200	PR	3 90	4,680 00	0 00	0 00	0 00	0 00
0094	80048	SLIP ON TENNIS SHOES - SIZE 14	1,200	PR	3 90	4,680 00	0 00	0 00	0 00	0 00
0095	80048	SLIP ON TENNIS SHOES - SIZE 15	1,200	PR	3 90	4,680 00	0 00	0 00	0 00	0 00
0096	80032	SLIP ON SANDALS SIZE SMALL Biochek Antimicrobial PVC Skid resistant sole to reduce risk of falls on wet floors Burgundy in color	1,710	PR	2 08	3,556 80	0 00	0 00	0 00	0 00
0097	80032	SLIP ON SANDALS SIZE MEDIUM	1,710	PR	2 08	3,556 80	0 00	0 00	0 00	0 00
0098	80032	SLIP ON SANDALS SIZE LARGE	1,710	PR	2 08	3,556 80	0 00	0 00	0 00	0 00
0099	80032	SLIP ON SANDALS SIZE XLARGE	1,710	PR	2 08	3,556 80	0 00	0 00	0 00	0 00
0100	80032	SLIP ON SANDALS SIZE XXLARGE	1,710	PR	2 08	3,556 80	0 00	0 00	0 00	0 00
0101	80032	SLIP ON SANDALS SIZE 3XLARGE	1,710	PR	2 08	3,556 80	0 00	0 00	0 00	0 00
0102	80032	SLIP ON SANDALS SIZE SIZE 5-6 (SMALL)	1,710	PR	2 08	3,556 80	0 00	0 00	0 00	0 00
0103	80032	SLIP ON SANDALS SIZE 7-8 (MEDIUM)	1,710	PR	2 08	3,556 80	0 00	0 00	0 00	0 00
0104	80032	SLIP ON SANDALS SIZE 9-10 (LARGE)	1,710	PR	2 08	3,556 80	0 00	0 00	0 00	0 00
0105	80032	SLIP ON SANDALS SIZE 11-12 (XLARGE)	1,710	PR	2 08	3,556 80	0 00	0 00	0 00	0 00
0106	80032	SLIP ON SANDALS SIZE 13-14 (XXLARGE)	1,710	PR	2 08	3,556 80	0 00	0 00	0 00	0 00

BID RESPONSE TABULATION
INMATE CLOTHING AND SUPPLIES
GALVESTON COUNTY, TEXAS

BID #: B122027
OPEN: 07/17/2012
2:00 PM

0107	95405	TOWELS HEAVY OR PREMIUM WEIGHT 100% MINIMUM 5 5 LBS PER DOZEN, WHITE IN COL IMPORTED OR DOMESTIC PRE-PACKAGED 25 DOZEN PER CASE 20" X 40" IN SIZE	600	DZ	12 54	7,524 00	12 37	7,422 00	13 61	8,166 00
0108	85092	WASHCLOTHS HEAVY OR PREMIUM WEIGHT 12" X 12" WHITE BATH WASHCLOTH	100	DZ	1 90	190 00	2 95	295 00	3 06	306 00
0109	61586	VINYL ID WASHABLE TAGS, 1000/ROLL	2	ROLL	0 00	0 00	0 00	0 00	0 00	0 00
0110	51080	NETS, TIE CORD LAUNDRY 24" X 36"	12	DZ	25 90	310 80	0 00	0 00	22 48	269 76
0111	20044	BDU TROUSERS - SMALL/REGULAR Military inspired construction, six (6) pockets, four (4) with button flaps Adjustable waist tab with four (4) bartacks Zipper fly with snap closure	6	EA	0 00	0 00	0 00	0 00	0 00	0 00
0112	20044	BDU TROUSER - MEDIUM/REGULAR Color to be Navy	1,710	EA	0 00	0 00	0 00	0 00	0 00	0 00
0113	20044	BDU TROUSER - LARGE/REGULAR Color to be Navy	15	EA	0 00	0 00	0 00	0 00	0 00	0 00
0114	20044	BDU TROUSER - XLARGE/REGULAR Color to be Navy	6	EA	0 00	0 00	0 00	0 00	0 00	0 00
0115	20044	BDU TROUSER - 2XLARGE/REGULAR Color to be Navy	4	EA	0 00	0 00	0 00	0 00	0 00	0 00
				Total of all Items		**119,173.30**		**14,467.00**		**18,341.16**

BID RESPONSE TABULATION
INMATE CLOTHING AND SUPPLIES
GALVESTON COUNTY, TEXAS

BID #: B122027
OPEN: 07/17/2012
2:00 PM

Item	Product Cod	Description	Quantity	Units	Vendor 714681 TABB TEXTILES CO INC		Vendor 714682 UNIFORMS MANUFACTURING I		Vendor. 714683 AMERICAN TEXTILE SYSTEMS	
					Unit Price	Extended	Unit Price	Extended	Unit Price	Extended
0001	85012	COTTON YEAR ROUND THERMAL BLANKET 100% cotton snag free closed weave blanket Preshrunk 6" selvaged sides and stitched ends to prevent dismantling Color to be white	1,000	EA	0 00	0 00	8 39	8,390 00	5 95	5,950 00
0002	85012	BLANKETS, 100% FIBER WOVEN POLYESTER Using center scrim that binds fibers together Tightly woven, will not pill, shred or mat even after washing 66" x 90" Color to be	48	EA	0 00	0 00	0 00	0 00	10 99	527 52
0003	85052	MATTRESS COVER - VINYL To be made of "Healthguard" anti-microbial vinyl material, made from heavy duty vinyl, fire retardant, tear resistant, antibacterial Seams for	450	EA	0 00	0 00	0 00	0 00	35 00	15,750 00
0004	85052	MATTRESS COVERS TWILL Slip on mattress cover Cover is a green color Twill 65% polyester, 35% combed cotton industrial finish fabric for maximum durability in	1,000	EA	0 00	0 00	0 00	0 00	12 99	12,990 00
0005	85063	PILLOWS FABRIC COVERED MICRO GUARD Size 20" x 26", white in color	40	EA	0 00	0 00	0 00	0 00	7 99	319 60
0006	85064	CLOTH PILLOW CASES WHITE IN COLOR	8	DZ	0 00	0 00	0 00	0 00	14 99	119 92
0007	20085	V-NECK WORK SHIRTS - SMALL V-neck slip-on reglan sleeve No buttons One pocket over left breast double needle lock stitched and bartacked All seams three (3) needle felled	1,625	EA	0 00	0 00	4 85	7,881 25	0 00	0 00

BID RESPONSE TABULATION
INMATE CLOTHING AND SUPPLIES
GALVESTON COUNTY, TEXAS

BID #: B122027
OPEN: 07/17/2012
2:00 PM

0008	20085	V-NECK WORK SHIRTS - MEDIUM	1,625	EA	0 00	0 00	4 85	7,881 25	0 00	0 00
0009	20085	V-NECK WORK SHIRTS - LARGE	1,625	EA	0 00	0 00	4 85	7,881 25	0 00	0 00
0010	20085	V-NECK WORK SHIRTS - X-LARGE	1,625	EA	0 00	0 00	4 85	7,881 25	0 00	0 00
0011	20085	V-NECK WORK SHIRTS - XXLARGE	1,625	EA	0 00	0 00	4 85	7,881 25	0 00	0 00
0012	20085	V-NECK WORK SHIRTS - XXXLARGE	1,625	EA	0 00	0 00	5 35	8,693 75	0 00	0 00
0013	20085	V-NECK WORK SHIRTS 4X-LARGE	1,625	EA	0 00	0 00	5 35	8,693 75	0 00	0 00
0014	20085	V-NECK WORK SHIRTS - 5X-LARGE	1,625	EA	0 00	0 00	5 35	8,693 75	0 00	0 00
0015	20085	V-NECK WORK SHIRTS - SMALL MENS V-neck slip-on reglan sleeve No buttons One pocket over left breast double needle lock stitched and bartacked All seams three (3) needle felled	4	EA	0 00	0 00	4 85	19 40	0 00	0 00
0016	20085	V-NECK WORK SHIRTS - MEDIUM - MENS	8	EA	0 00	0 00	4 85	38 80	0 00	0 00
0017	20085	V-NECK WORK SHIRTS - LARGE - MENS	8	EA	0 00	0 00	4 85	38 80	0 00	0 00
0018	20085	V-NECK WORK SHIRTS X-LARGE - MENS	8	EA	0 00	0 00	4 85	38 80	0 00	0 00
0019	20085	V-NECK WORK SHIRTS - XXLARGE - MENS	4	EA	0 00	0 00	4 85	19 40	0 00	0 00
0020	20092	WORK PANTS - XSMALL - MENS Slip on elastic wasit with mock fly Elastic to be woven 1 1/2" heat resistant 26 gauge rubber, four rows of lock stitched to pants (chain	1,735	EA	0 00	0 00	5 70	9,889 50	0 00	0 00
0021	20092	WORK PANTS - SMALL MENS	1,735	EA	0 00	0 00	5 70	9,889 50	0 00	0 00
0022	20092	WORK PANTS - MEDIUM - MENS	1,735	EA	0 00	0 00	5 70	9,889 50	0 00	0 00
0023	20092	WORK PANTS - LARGE - MENS	1,735	EA	0 00	0 00	5 70	9,889 50	0 00	0 00
0024	20092	WORK PANTS - XLARGE - MENS	1,735	EA	0 00	0 00	5 70	9,889 50	0 00	0 00
0025	20092	WORK PANTS - XXLARGE - MENS	1,735	EA	0 00	0 00	5 70	9,889 50	0 00	0 00

BID RESPONSE TABULATION
INMATE CLOTHING AND SUPPLIES
GALVESTON COUNTY, TEXAS

BID #: B122027
OPEN: 07/17/2012
2:00 PM

0026	20092	WORK PANTS - XXXLARGE - MENS	1,735	EA	0 00	0 00	6 30	10,930 50	0 00	0 00
0027	20092	WORK PANTS - 4XLARGE - MENS	1,735	EA	0 00	0 00	6 30	10,930 50	0 00	0 00
0028	20092	WORK PANTS - 5XLARGE - MENS	1,735	EA	0 00	0 00	6 30	10,930 50	0 00	0 00
0029	20092	WORK PANTS - 6XLARGE - MENS	175	EA	0 00	0 00	6 90	1,207 50	0 00	0 00
0030	20092	WORK PANTS - 7XLARGE - MENS	175	EA	0 00	0 00	6 90	1,207 50	0 00	0 00
0031	20092	WORK PANTS - 8XLARGE - MENS	175	EA	0 00	0 00	6 90	1,207 50	0 00	0 00
0032	20092	WORK PANTS - 9XLARGE - MENS	175	EA	0 00	0 00	7 60	1,330 00	0 00	0 00
0033	20092	WORK PANTS - 10XLARGE - MENS	175	EA	0 00	0 00	7 60	1,330 00	0 00	0 00
0034	20092	JUMPSUIT WITH SNAP CLOSURE - SMALL Triple stitch seam construction Heavy duty thread Elasticized waistband Reinforcing bartacks, color coded size labels Bias and seams to be	4	EA	0 00	0 00	9 75	39 00	0 00	0 00
0035	20092	JUMPSUIT WITH SNAP CLOSURE - MEDIUM	8	EA	0 00	0 00	9 75	78 00	0 00	0 00
0036	20092	JUMPSUIT WITH SNAP CLOSURE - LARGE	12	EA	0 00	0 00	9 75	117 00	0 00	0 00
0037	20092	JUMPSUIT WITH SNAP CLOSURE - XLARGE	18	EA	0 00	0 00	9 75	175 50	0 00	0 00
0038	20092	JUMPSUIT WITH SNAP CLOSURE - XXLARGE	18	EA	0 00	0 00	9 75	175 50	0 00	0 00
0039	20092	JUMPSUIT WITH SNAP CLOSURE - XXXLARGE	12	EA	0 00	0 00	10 75	129 00	0 00	0 00
0040	20092	JUMPSUIT WITH SNAP CLOSURE - 4XLARGE	8	EA	0 00	0 00	10 75	86 00	0 00	0 00
0041	20092	JUMPSUIT WITH SNAP CLOSURE - 5XLARGE	4	EA	0 00	0 00	11 85	47 40	0 00	0 00
0042	20092	JUMPSUIT WITH SNAP CLOSURE - 6XLARGE	4	EA	0 00	0 00	11 85	47 40	0 00	0 00
0043	20092	JUMPSUIT WITH SNAP CLOSURE - 7XLARGE	4	EA	0 00	0 00	11 85	47 40	0 00	0 00
0044	20070	100% COTTON T-SHIRTS - MEDIUM - MENS	6	DZ	0 00	0 00	16 25	97 50	0 00	0 00
0045	20070	100% COTTON T-SHIRTS - LARGE - MENS	12	DZ	0 00	0 00	16 25	195 00	0 00	0 00

BID RESPONSE TABULATION
INMATE CLOTHING AND SUPPLIES
GALVESTON COUNTY, TEXAS

BID #: B122027
OPEN: 07/17/2012
2:00 PM

0046	20070	100% COTTON T-SHIRTS - XLARGE - MENS	12	DZ	0 00	0 00	16 25	195 00	0 00	0 00
0047	20070	100% COTTON T-SHIRT - XXLARGE - MENS	4	DZ	0 00	0 00	17 20	68 80	0 00	0 00
0048	20070	100% COTTON T-SHIRTS - XXXLARGE - MENS	4	DZ	0 00	0 00	17 20	68 80	0 00	0 00
0049	20010	SWEATPANTS - SMALL COLOR TO BE NAVY	8	EA	0 00	0 00	5 85	46 80	0 00	0 00
0050	20010	SWEATPANTS - MEDIUM COLOR TO BE NAVY	12	EA	0 00	0 00	5 85	70 20	0 00	0 00
0051	20010	SWEATPANTS - LARGE COLOR TO BE NAVY	12	EA	0 00	0 00	5 85	70 20	0 00	0 00
0052	20010	SWEATPANTS - XLARGE COLOR TO BE NAVY	12	EA	0 00	0 00	5 85	70 20	0 00	0 00
0053	20010	SWEATPANTS - XXLARGE COLOR TO BE NAVY	8	EA	0 00	0 00	6 50	52 00	0 00	0 00
0054	20010	SWEATPANTS - XXXLARGE COLOR TO BE NAVY	4	EA	0 00	0 00	6 50	26 00	0 00	0 00
0055	20010	CREW NECK SWEATSHIRT - MEDIUM COLOR TO BE GRAY	8	EA	0 00	0 00	6 85	54 80	0 00	0 00
0056	20010	CREW NECK SWEATSHIRT - LARGE COLOR TO BE GREY	12	EA	0 00	0 00	6 85	82 20	0 00	0 00
0057	20010	CREW NECK SWEATSHIRT - XLARGE COLOR TO BE GREY	12	EA	0 00	0 00	6 85	82 20	0 00	0 00
0058	20010	CREW NECK SWEATSHIRT - XXLARGE COLOR TO BE GREY	8	EA	0 00	0 00	7 50	60 00	0 00	0 00
0059	20010	CREW NECK SWEATSHIRT - XXXLARGE COLOR TO BE GREY	4	EA	0 00	0 00	7 50	30 00	0 00	0 00
0060	20010	CREW NECK SWEATSHIRT - MEDIUM ORANGE IN COLOR LOGO ON BACK "TLC"	10	EA	0 00	0 00	8 80	88 00	0 00	0 00

BID RESPONSE TABULATION
INMATE CLOTHING AND SUPPLIES
GALVESTON COUNTY, TEXAS

BID #: B122027
OPEN: 07/17/2012
2:00 PM

0061	20010	CREW NECK SWEATSHIRT - LARGE ORANGE IN COLOR LOGO ON BACK "TLC"	10	EA	0 00	0 00	8 80	88 00	0 00	0 00
0062	20010	CREW NECK SWEATSHIRT - XLARGE ORANGE IN COLOR LOGO ON BACK "TLC"	5	EA	0 00	0 00	8 80	44 00	0 00	0 00
0063	20010	CREW NECK SWEATSHIRT - XXLARGE ORANGE IN COLOR LOGO ON BACK "TLC"	3	EA	0 00	0 00	9 45	28 35	0 00	0 00
0064	20010	JERSEY KNIT PRACTICE SHORTS - MEDIUM Triple sewn, soft cotton/poly blend jersey knit 6" inseam with covered elastic waistband No pockets or drawstrings Navy in color	24	EA	0 00	0 00	5 25	126 00	0 00	0 00
0065	20010	JERSEY KNIT PRACTICE SHORTS - LARGE	24	EA	0 00	0 00	5 25	126 00	0 00	0 00
0066	20010	JERSEY KNIT PRACTICE SHORTS - XLARGE	36	EA	0 00	0 00	5 25	189 00	0 00	0 00
0067	20010	JERSEY KNIT PRACTICE SHORTS - 2XLARGE	24	EA	0 00	0 00	5 85	140 40	0 00	0 00
0068	20010	JERSEY KNIT PRACTICE SHORTS - 3XLARGE	8	EA	0 00	0 00	5 85	46 80	0 00	0 00
0069	20151	MENS SOCKS SOLID CREWS ONE SIZE FITS ALL 80% COTTON, 20% SYNTHETIC WHITE IN COLOR	50	DZ	0 00	0 00	4 55	227 50	0 00	0 00
0070	20187	MENS BRIEFS POLYESTER/COTTON BLEND - MEDIUM - WHITE IN COLOR	12	DZ	0 00	0 00	11 38	136 56	0 00	0 00
0071	20187	MENS BRIEFS POLYESTER/COTTON BLEND LARGE - WHITE IN COLOR	18	DZ	0 00	0 00	11 38	204 84	0 00	0 00
0072	20187	MENS BRIEFS POLYESTER/COTTON BLEND XLARGE - WHITE IN COLOR	12	DZ	0 00	0 00	11 38	136 56	0 00	0 00
0073	20187	MENS BRIEFS POLYESTER/COTTON BLEND 2XLARGE - WHITE IN COLOR	8	DZ	0 00	0 00	12 70	101 60	0 00	0 00

BID RESPONSE TABULATION
INMATE CLOTHING AND SUPPLIES
GALVESTON COUNTY, TEXAS

BID #: B122027
OPEN: 07/17/2012
2:00 PM

0074	20187	MENS BRIEFS POLYESTER/COTTON BLEND 3XLARGE - WHITE IN COLOR	4	DZ	0 00	0 00	13 99	55 96	0 00	0 00
0075	20186	WOMENS PANTIES KNITTED ELASTIC WAIST & LEG BANDS SIZE 6 - WHITE IN COLOR	4	DZ	0 00	0 00	7 00	28 00	0 00	0 00
0076	20186	WOMENS PANTIES KNITTED WAIST & LEG BANDS SIZE 7 - WHITE IN COLOR	8	DZ	0 00	0 00	7 00	56 00	0 00	0 00
0077	20186	WOMENS PANTIES KNITTED WAIST & LEG BANDS SIZE 8 - WHITE IN COLOR	8	DZ	0 00	0 00	7 00	56 00	0 00	0 00
0078	20186	WOMENS PANTIES KNITTED WAIST & LEG BANDS SIZE 9 - WHITE IN COLOR	4	DZ	0 00	0 00	7 00	28 00	0 00	0 00
0079	20186	WOMENS PANTIES KNITTED ELASTIC WAIST & LEG BAND SIZE 10 - WHITE IN COLOR	4	DZ	0 00	0 00	7 00	28 00	0 00	0 00
0080	20186	SPORTS BRA - SMALL (32 A/B) Hookless pull-on style No metal or plastic Wide, non-slip straps, racer-style back White in color	16	EA	0 00	0 00	2 05	32 80	0 00	0 00
0081	20186	SPORTS BRA - MEDIUM (34 A/B)	48	EA	0 00	0 00	2 05	98 40	0 00	0 00
0082	20186	SPORTS BRA - LARGE (36 A/B)	36	EA	0 00	0 00	2 05	73 80	0 00	0 00
0083	20186	SPORTS BRA - XLARGE (38 A/B)	12	EA	0 00	0 00	2 05	24 60	0 00	0 00
0084	20186	SPORTS BRA XXLARGE (40-42 B,C&D)	12	EA	0 00	0 00	2 16	25 92	0 00	0 00
0085	80048	SLIP ON TENNIS SHOES - SIZE 5 Heavy weight navy blue canvas uppers White rubber around sole Insoles stitched in place USA made only	1,200	PR	0 00	0 00	2 65	3,180 00	0 00	0 00
0086	80048	SLIP ON TENNIS SHOES - SIZE 6	1,200	PR	0 00	0 00	2 65	3,180 00	0 00	0 00

BID RESPONSE TABULATION
INMATE CLOTHING AND SUPPLIES
GALVESTON COUNTY, TEXAS

BID #: B122027
OPEN: 07/17/2012
2:00 PM

0087	80048	SLIP ON TENNIS SHOES - SIZE 7	1,200	PR	0 00	0 00	2 65	3,180 00	0 00	0 00
0088	80048	SLIP ON TENNIS SHOES - SIZE 8	1,200	PR	0 00	0 00	2 65	3,180 00	0 00	0 00
0089	80048	SLIP ON TENNIS SHOES - SIZE 9	1,200	PR	0 00	0 00	2 65	3,180 00	0 00	0 00
0090	80048	SLIP ON TENNIS SHOES - SIZE 10	1,200	PR	0 00	0 00	2 65	3,180 00	0 00	0 00
0091	80048	SLIP ON TENNIS SHOES - SIZE 11	1,200	PR	0 00	0 00	2 65	3,180 00	0 00	0 00
0092	80048	SLIP ON TENNIS SHOES - SIZE 12	1,200	PR	0 00	0 00	2 65	3,180 00	0 00	0 00
0093	80048	SLIP ON TENNIS SHOES - SIZE 13	1,200	PR	0 00	0 00	2 65	3,180 00	0 00	0 00
0094	80048	SLIP ON TENNIS SHOES - SIZE 14	1,200	PR	0 00	0 00	2 65	3,180 00	0 00	0 00
0095	80048	SLIP ON TENNIS SHOES - SIZE 15	1,200	PR	0 00	0 00	2 65	3,180 00	0 00	0 00
0096	80032	SLIP ON SANDALS SIZE SMALL Biochek Antimicrobial PVC Skid resistant sole to reduce risk of falls on wet floors Burgundy in color	0	PR	0 00	0 00	0 00	0 00	0 00	0 00
0097	80032	SLIP ON SANDALS SIZE MEDIUM	1,710	PR	0 00	0 00	0 00	0 00	0 00	0 00
0098	80032	SLIP ON SANDALS SIZE LARGE	1,710	PR	0 00	0 00	0 00	0 00	0 00	0 00
0099	80032	SLIP ON SANDALS SIZE XLARGE	1,710	PR	0 00	0 00	0 00	0 00	0 00	0 00
0100	80032	SLIP ON SANDALS SIZE XXLARGE	1,710	PR	0 00	0 00	0 00	0 00	0 00	0 00
0101	80032	SLIP ON SANDALS SIZE 3XLARGE	1,710	PR	0 00	0 00	0 00	0 00	0 00	0 00
0102	80032	SLIP ON SANDALS SIZE SIZE 5-6 (SMALL)	1,710	PR	0 00	0 00	0 00	0 00	0 00	0 00
0103	80032	SLIP ON SANDALS SIZE 7-8 (MEDIUM)	1,710	PR	0 00	0 00	0 00	0 00	0 00	0 00
0104	80032	SLIP ON SANDALS SIZE 9-10 (LARGE)	1,710	PR	0 00	0 00	0 00	0 00	0 00	0 00
0105	80032	SLIP ON SANDALS SIZE 11-12 (XLARGE)	1,710	PR	0 00	0 00	0 00	0 00	0 00	0 00
0106	80032	SLIP ON SANDALS SIZE 13-14 (XXLARGE)	1,710	PR	0 00	0 00	0 00	0 00	0 00	0 00

BID RESPONSE TABULATION
INMATE CLOTHING AND SUPPLIES
GALVESTON COUNTY, TEXAS

BID #· B122027
OPEN: 07/17/2012
2:00 PM

0107	95405	TOWELS HEAVY OR PREMIUM WEIGHT 100% MINIMUM 5 5 LBS PER DOZEN, WHITE IN COL IMPORTED OR DOMESTIC PRE-PACKAGED 25 DOZEN PER CASE 20" X 40" IN SIZE	600	DZ	11 55	6,930 00	15 90	9,540 00	9 25	5,550 00
0108	85092	WASHCLOTHS HEAVY OR PREMIUM WEIGHT 12" X 12" WHITE BATH WASHCLOTH	100	DZ	2 70	270 00	2 87	287 00	2 35	235 00
0109	61586	VINYL ID WASHABLE TAGS, 1000/ROLL	2	ROLL	0 00	0 00	0 00	0 00	0 00	0 00
0110	51080	NETS, TIE CORD LAUNDRY 24" X 36"	12	DZ	0 00	0 00	26 85	322 20	0 00	0 00
0111	20044	BDU TROUSERS - SMALL/REGULAR Military inspired construction, six (6) pockets, four (4) with button flaps Adjustable waist tab with four (4) bartacks Zipper fly with snap closure	6	EA	0 00	0 00	25 89	155 34	0 00	0 00
0112	20044	BDU TROUSER - MEDIUM/REGULAR Color to be Navy	15	EA	0 00	0 00	25 89	388 35	0 00	0 00
0113	20044	BDU TROUSER - LARGE/REGULAR Color to be Navy	15	EA	0 00	0 00	25 89	388 35	0 00	0 00
0114	20044	BDU TROUSER - XLARGE/REGULAR Color to be Navy	6	EA	0 00	0 00	25 89	155 34	0 00	0 00
0115	20044	BDU TROUSER - 2XLARGE/REGULAR Color to be Navy	4	EA	0 00	0 00	29 15	116 60	0 00	0 00
				Total of all Items		**7,200.00**		**223,179.87**		**41,442 04**

Bob Barker Company Inc

BID #: B122027
OPEN: 07/19/2012
2:00 PM

INMATE CLOTHNG AND SUPPLIES
GALVESTON COUNTY, TEXAS

COMPANY INFORMATION BID FORM

THE COMPANY OF Bob Barker Company Inc

Address 134 N Main Street

Fuquay-Varina, NC 27526

FEIN (TAX ID) 56-1558062

The following shall be returned with your bid Failure to do so may be ample cause for rejection of bid as non responsive It is the responsibility of the Bidder to ensure that Bidder has received all addenda

Items:	**Confirmed (X):**
1. **References (if required)**	x
2. **Addenda, if any.**	**#1**____ **#2**____ **#3**____ **#4** __
3. **One (1) original and four (4) copies of submittal**	x
4. **Vendor Qualification packet**	x
5. **Payment Terms:**	x **net 30** _____ **Other**

Person to contact regarding this bid Allison Wilmesmeier

Title Pricing Specialist Phone 800-334-9880 Fax 800-322-7537

E-mail address allisonwilmesmeier@bobbarker com

Name of person authorized to bind the Company: Allison Wilmesmeier (see attached authorization)

Signature [signature] Date 7/13/12

Title Pricing Specialist Phone 800-334-9880 Fax 800-322-7537

E-mail address allisonwilmesmeier@bobbarker com

Bob Barker Company Inc

BID #: B122027
OPEN: 07/19/2012
2:00 PM

INMATE CLOTHNG AND SUPPLIES
GALVESTON COUNTY, TEXAS

SECTION TOTAL BID FORM

Having read and understood the instructions, terms, conditions, specifications, and invitation to bid we submit the following

SECTION	TOTAL AMOUNT
Section I – Bedding, line items 1 – 6	32878 36
Section II – Work shirts and Pants, line items 7- 43	164408 64
Section III – Recreational Clothing, line items 44 – 69	2346 23
Section IV – Undergarments, line items 70 – 84	1030 84
Section V – Footwear, line items 85 – 106	80813 40
Section VI – Towels and Linens, line items 107 – 108	8834 00
Section VII – Laundry Items and Accessories, line items 109 – 110	288 00
Section VIII – BDU Trousers, line items 111 - 115	951 28

Bob Barker Company Inc

LINE ITEM DETAIL

INMATE CLOTHING AND SUPPLIES

GALVESTON COUNTY, TEXAS

BID #: B122027
OPEN: 07/17/2012
2:00 PM

VENDOR ID

Item No.	Product Code	Description	Quantity	Units	Catalog #	Unit Price	Extended Price
0001	85012	COTTON YEAR ROUND THERMAL BLANKET 100% cotton snag free closed weave blanket Preshrunk 6" selvaged sides and stitched ends to prevent dismantling. Color to be white Weight approximately 2 5 lbs. Size of 66 x 90 Thread count warp 48 ends per inch comprised of 10/1 and 20/2 yarn Thread count fill 30 per inch in 16/1 yarn.	1000	EA	BLSPW	$ 6 30	$ 6300 00
0002	85012	BLANKETS, 100% FIBER WOVEN POLYESTER Using center scrim that binds fibers together Tightly woven, will not pill, shred or mat even after washing 66" x 90" Color to be blue or navy Flame resistant, hemmed on all four (4) sides, seamless construction. Machine washable	48	EA	BL6690LB	$ 10 73	$ 515 04
					*Sold by case of 4 only, 42 92/case		
0003	85052	MATTRESS COVER - VINYL To be made of "Healthguard" anti-microbial vinyl material, made from heavy duty vinyl, fire retardant, tear resistant, antibacterial Seams for	450	EA	VMC30724	$ 10 58	$ 4761 00

LINE ITEM DETAIL

INMATE CLOTHING AND SUPPLIES

GALVESTON COUNTY, TEXAS

BID #: B122027
OPEN: 07/17/2012
2:00 PM

VENDOR ID

Item No.	Product Code	Description	Quantity	Units	Catalog #	Unit Price	Extended Price
		double-needle, lock-stitch, sewn with heavy duty nylon for long lasting durability Mattress cover is first quality Mildew and stain resistant Made of two layers of vinyl (12 2 ounce per square yard) bonded to scrim cloth This type of cover can be cleaned with mild, soapy water and/or Sani-Cloth Wipes Cover to fit mattress size 30" x 72" x 4" Color should be green					
0004	85052	MATTRESS COVERS TWILL Slip on mattress cover Cover is a green color Twill 65% polyester, 35% combed cotton industrial finish fabric for maximum durability in institutional laundry. Seams are single-needle lock-stitch with heavy duty polyester thread Covers to be sewn, overlocked, with no raw edges, exposed to fit mattress 30" x 72" x 4"	1000	EA	ZHMC30754OG ** Note sold by case of 12 only	$ 21 00	$ 21000 00
0005	85063	PILLOWS FABRIC COVERED MICRO GUARD Sixe 20" x 26", white in color	40	EA	ANP56	$ 5 87	$ 234 80

LINE ITEM DETAIL

INMATE CLOTHING AND SUPPLIES

GALVESTON COUNTY, TEXAS

BID #: B122027
OPEN: 07/17/2012
2:00 PM

VENDOR ID

Item No.	Product Code	Description	Quantity	Units	Catalog #	Unit Price	Extended Price
0006	85064	CLOTH PILLOW CASES WHITE IN COLOR	8	DZ	PC4234	$ 8 44	$ 67 52
0007	20085	V-NECK WORK SHIRTS - SMALL V-neck slip-on reglan sleeve No buttons One pocket over left breast double needle lock stitched and bartacked All seams three (3) needle felled Sleeve and bottom hems double folded and lock stitched with bartacks at neck. Bias to be cleanly finished with no raw edges exposed. Labels to be woven polyester 2 1/2" x 1 1/4" color coded by size. Fabric to be 7 1/2 oz Twill, 65% Polyester combed cotton equal to Graniteville Mills 20/20 industrial laundry finish fabric Thread to be same color as the fabric All three (3) needle seams shall be cleanly finished and have no raw or frayed edges SAMPLE OF ONE SHIRT MUST BE SUBMITTED WITH BID Colors to be gray, navy, orange, khaki, and green Logo on back "GALVESTON COUNTY JAIL"	1625	EA	TGYS TNS TOS TKS TGS	$ 4 50	$ 7312 50

Bob Barker Company Inc

LINE ITEM DETAIL

INMATE CLOTHING AND SUPPLIES

GALVESTON COUNTY, TEXAS

BID #: B122027
OPEN: 07/17/2012
2:00 PM

VENDOR ID

Item No.	Product Code	Description	Quantity	Units	Catalog #	Unit Price	Extended Price
0008	20085	V-NECK WORK SHIRTS - MEDIUM	1625	EA	See 0007	$ 4 50	$ 7312 50
0009	20085	V-NECK WORK SHIRTS - LARGE	1625	EA	See 0007	$ 5 00	$ 8125 00
0010	20085	V-NECK WORK SHIRTS - X-LARGE	1625	EA	See 0007	$ 5 00	$ 8125 00
0011	20085	V-NECK WORK SHIRTS - XXLARGE	1625	EA	See 0007	$ 5 15	$ 8368 75
0012	20085	V-NECK WORK SHIRTS - XXXLARGE	1625	EA	See 0007	$ 5 45	$ 8856 25
0013	20085	V-NECK WORK SHIRTS 4X-LARGE	1625	EA	See 0007	$ 5 90	$ 9587 50
0014	20085	V-NECK WORK SHIRTS - 5X-LARGE	1625	EA	See 0007	$ 6 10	$ 9912 50
0015	20085	V-NECK WORK SHIRTS - SMALL MENS V-neck slip-on reglan sleeve No buttons One pocket over left breast double needle lock stitched and bartacked All seams three (3) needle felled Sleeve and bottom hems double folded and lock stitched with bartacks at neck Bias to be cleanly finished	4	EA	TOS	$ 4 50	$ 18 00

Bob Barker Company Inc

LINE ITEM DETAIL

INMATE CLOTHING AND SUPPLIES

GALVESTON COUNTY, TEXAS

BID #: B122027
OPEN: 07/17/2012
2:00 PM

VENDOR ID

Item No	Product Code	Description	Quantity	Units	Catalog #	Unit Price	Extended Price
		with no raw edges exposed Labels to be woven polyester 2 1/2" x 1 1/4" color coded by size Fabric to be 7 1/2 oz Twill, 65% Polyester combed cotton equal to Graniteville Mills 20/20 industrial laundry finish fabric Thread to be same color as the fabric All three (3) needle seams shall be cleanly finished and have no raw or frayed edges SAMPLE OF ONE SHIRT MUST BE SUBMITTED WITH BID Color to be orange Logo on back "TLC"					
0016	20085	V-NECK WORK SHIRTS - MEDIUM - MENS	8	EA	TOS	$ 4 50	$ 36 00
0017	20085	V-NECK WORK SHIRTS - LARGE - MENS	8	EA	TOS	$ 5 00	$ 40 00
0018	20085	V-NECK WORK SHIRTS X-LARGE - MENS	8	EA	TOS	$ 5 00	$ 40 00
0019	20085	V-NECK WORK SHIRTS - XXLARGE - MENS	4	EA	TOS	$ 5 15	$ 20 60
0020	20092	WORK PANTS - XSMALL - MENS Slip on elastic wasit with mock fly Elastic to be woven 1 1/2" heat resistant 26 gauge rubber, four rows	1735	EA	TGYT TOT TKT TGT	$ 5 00	$ 8675 00

Bob Barker Company Inc

LINE ITEM DETAIL

INMATE CLOTHING AND SUPPLIES

GALVESTON COUNTY, TEXAS

BID #: B122027
OPEN: 07/17/2012
2:00 PM

VENDOR ID

Item No.	Product Code	Description	Quantity	Units	Catalog #	Unit Price	Extended Price
		of lock stitched to pants (chain stitching is not acceptable) Elastic to be guaranteed for life of the garment from losing its elasticity Labels to be woven polyester 2 1/2" x 1 1/4" color coded by size All seams three (3) needle felled Crotch mock fly to be sew serged, double needle lock stitched and bartacked Leg hems double folded and lock stitched All inseams to be 32" hemmed Fabric to be 7 1/2 oz Twill 65% Polyester, 35% combed cotton equal to Graniteville 20/20 twill industrial laundry finish Thread to be the same color as the fabric All three (3) needle seams shall be clearly finished and have no raw or frayed edges SAMPLE OF ONE PAIR OF PANTS MUST BE SUBMITTED WITH BID Colors to be gray, orange, khaki, and green.					
0021	20092	WORK PANTS - SMALL MENS	1735	EA	See 0020	$ 5 00	$ 8675 00

Bob Barker Company Inc

LINE ITEM DETAIL

INMATE CLOTHING AND SUPPLIES

GALVESTON COUNTY, TEXAS

BID #: B122027
OPEN: 07/17/2012
2:00 PM

VENDOR ID

Item No.	Product Code	Description	Quantity	Units	Catalog #	Unit Price	Extended Price
0022	20092	WORK PANTS - MEDIUM - MENS	1735	EA	0020	$ 5 00	$ 8675 00
0023	20092	WORK PANTS - LARGE - MENS	1735	EA	0020	$ 5 75	$ 9976 25
0024	20092	WORK PANTS - XLARGE - MENS	1735	EA	0020	$ 5 75	$ 9976 25
0025	20092	WORK PANTS - XXLARGE - MENS	1735	EA	0020	$ 6 00	$ 10410 00
0026	20092	WORK PANTS - XXXLARGE - MENS	1735	EA	0020	$ 6 00	$ 10410 00
0027	20092	WORK PANTS - 4XLARGE - MENS	1735	EA	0020	$ 6 24	$ 10826 40
0028	20092	WORK PANTS - 5XLARGE - MENS	1735	EA	0020	$ 6 64	$ 11520 40
0029	20092	WORK PANTS - 6XLARGE - MENS	175	EA	0020	$ 7 22	$ 1263 50
0030	20092	WORK PANTS - 7XLARGE - MENS	175	EA	0020	$ 7 22	$ 1263 50

Bob Barker Company Inc

LINE ITEM DETAIL

INMATE CLOTHING AND SUPPLIES

GALVESTON COUNTY, TEXAS

BID #: B122027
OPEN: 07/17/2012
2:00 PM

VENDOR ID

Item No	Product Code	Description	Quantity	Units	Catalog #	Unit Price	Extended Price
0031	20092	WORK PANTS - 8XLARGE - MENS	175	EA	See 0020	$ 7 44	$ 1302 00
0032	20092	WORK PANTS - 9XLARGE - MENS	175	EA	See 0020	$ 7 44	$ 1302 00
0033	20092	WORK PANTS - 10XLARGE - MENS	175	EA	See 0020	$ 7 58	$ 1326 50
0034	20092	JUMPSUIT WITH SNAP CLOSURE - SMALL Triple stitch seam construction Heavy duty thread Elasticized waistband Reinforcing bartacks, color coded size labels Bias and seams to be cleanly finished and have no raw edges or frayed edges Fabric to be 7 1/2 oz Twill, 65% Polyester, 35% combed cotton Colors are to be green and navy	4	EA	24212 24220	$ 10 00	$ 40 00
0035	20092	JUMPSUIT WITH SNAP CLOSURE - MEDIUM	8	EA	See 0034	$ 10.00	$ 80 00
0036	20092	JUMPSUIT WITH SNAP CLOSURE - LARGE	12	EA	SEE 0034	$ 10 60	$ 127 20

Bob Barker Company Inc

LINE ITEM DETAIL

INMATE CLOTHING AND SUPPLIES

GALVESTON COUNTY, TEXAS

BID #: B122027
OPEN: 07/17/2012
2:00 PM

VENDOR ID

Item No.	Product Code	Description	Quantity	Units	Catalog #	Unit Price	Extended Price
0037	20092	JUMPSUIT WITH SNAP CLOSURE - XLARGE	18	EA	SEE 0034	$ 11 00	$ 198 00
0038	20092	JUMPSUIT WITH SNAP CLOSURE - XXLARGE	18	EA	SEE 0034	$ 11 32	$ 203 76
0039	20092	JUMPSUIT WITH SNAP CLOSURE - XXXLARGE	12	EA	SEE 0034	$ 11 84	$ 142 08
0040	20092	JUMPSUIT WITH SNAP CLOSURE - 4XLARGE	8	EA	SEE 0034	$ 12 32	$ 98.56
0041	20092	JUMPSUIT WITH SNAP CLOSURE - 5XLARGE	4	EA	SEE 0034	$ 12 88	$ 51 52
0042	20092	JUMPSUIT WITH SNAP CLOSURE - 6XLARGE	4	EA	SEE 0034	$ 13 70	$ 54 80
0043	20092	JUMPSUIT WITH SNAP CLOSURE - 7XLARGE	4	EA	SEE 0034	$ 14 08	$ 56 32
0044	20070	100% COTTON T-SHIRTS - MEDIUM - MENS	6	DZ	671	$ 19 77	$ 118 62
0045	20070	100% COTTON T-SHIRTS - LARGE - MENS	12	DZ	671	$ 19 77	$ 237 24

Bob Barker Company Inc

LINE ITEM DETAIL

INMATE CLOTHING AND SUPPLIES

GALVESTON COUNTY, TEXAS

BID #: B122027
OPEN: 07/17/2012
2:00 PM

VENDOR ID

Item No	Product Code	Description	Quantity	Units	Catalog #	Unit Price	Extended Price
0046	20070	100% COTTON T-SHIRTS - XLARGE - MENS	12	DZ	671	$ 20 04	$ 240 48
0047	20070	100% COTTON T-SHIRT - XXLARGE - MENS	4	DZ	671	$ 22 56	$ 90 24
0048	20070	100% COTTON T-SHIRTS - XXXLARGE - MENS	4	DZ	671	$ 23 96	$ 95 84
0049	20010	SWEATPANTS - SMALL COLOR TO BE NAVY	8	EA	SPNV	$ 5 98	$ 47 84
0050	20010	SWEATPANTS - MEDIUM COLOR TO BE NAVY	12	EA	SPNV	$ 6 57	$ 78 84
0051	20010	SWEATPANTS - LARGE COLOR TO BE NAVY	12	EA	SPNV	$ 6 57	$ 78 84
0052	20010	SWEATPANTS - XLARGE COLOR TO BE NAVY	12	EA	SPNV	$ 6 57	$ 78 84
0053	20010	SWEATPANTS - XXLARGE COLOR TO BE NAVY	8	EA	SPNV	$ 7 48	$ 59 84

Bob Barker Company Inc

LINE ITEM DETAIL

INMATE CLOTHING AND SUPPLIES

GALVESTON COUNTY, TEXAS

BID #: B122027
OPEN: 07/17/2012
2:00 PM

VENDOR ID

Item No	Product Code	Description	Quantity	Units	Catalog #	Unit Price	Extended Price
0054	20010	SWEATPANTS - XXXLARGE COLOR TO BE NAVY	4	EA	SPNV	$ 7 69	$ 30 76
0055	20010	CREW NECK SWEATSHIRT - MEDIUM COLOR TO BE GRAY	8	EA	SSGY	$ 5 75	$ 46 00
0056	20010	CREW NECK SWEATSHIRT - LARGE COLOR TO BE GREY	12	EA	SSGY	$ 5 75	$ 69 00
0057	20010	CREW NECK SWEATSHIRT - XLARGE COLOR TO BE GREY	12	EA	SSGY	$ 5 75	$ 69 00
0058	20010	CREW NECK SWEATSHIRT - XXLARGE COLOR TO BE GREY	8	EA	SSGY	$ 6 58	$ 52 64
0059	20010	CREW NECK SWEATSHIRT - XXXLARGE COLOR TO BE GREY	4	EA	SSGY	$ 6 58	$ 26 32
0060	20010	CREW NECK SWEATSHIRT - MEDIUM ORANGE IN COLOR LOGO ON BACK "TLC"	10	EA	SSOR	$ 6 57	$ 65 70

Bob Barker Company Inc

LINE ITEM DETAIL

INMATE CLOTHING AND SUPPLIES

GALVESTON COUNTY, TEXAS

BID #: B122027
OPEN: 07/17/2012
2:00 PM

VENDOR ID

Item No.	Product Code	Description	Quantity	Units	Catalog #	Unit Price	Extended Price
0061	20010	CREW NECK SWEATSHIRT - LARGE ORANGE IN COLOR LOGO ON BACK "TLC"	10	EA	SSOR	$ 6 57	$ 65 70
0062	20010	CREW NECK SWEATSHIRT - XLARGE ORANGE IN COLOR LOGO ON BACK "TLC"	5	EA	SSOR	$ 6 57	$ 32 85
0063	20010	CREW NECK SWEATSHIRT - XXLARGE ORANGE IN COLOR LOGO ON BACK "TLC"	3	EA	SSOR	$ 7 48	$ 22 44
0064	20010	JERSEY KNIT PRACTICE SHORTS - MEDIUM Triple sewn, soft cotton/poly blend jersey knit 6" inseam with covered elastic waistband. No pockets or drawstrings Navy in color	24	EA	859	$ 4 16	$ 99 84
0065	20010	JERSEY KNIT PRACTICE SHORTS - LARGE	24	EA	859	$ 4 16	$ 99 84
0066	20010	JERSEY KNIT PRACTICE SHORTS - XLARGE	36	EA	859	$ 4 16	$ 149 76

Bob Barker Company Inc

LINE ITEM DETAIL

INMATE CLOTHING AND SUPPLIES

GALVESTON COUNTY, TEXAS

BID #: B122027
OPEN. 07/17/2012
2:00 PM

VENDOR ID

Item No.	Product Code	Description	Quantity	Units	Catalog #	Unit Price	Extended Price
0067	20010	JERSEY KNIT PRACTICE SHORTS - 2XLARGE	24	EA	859	$ 4 16	$ 99 84
0068	20010	JERSEY KNIT PRACTICE SHORTS - 3XLARGE	8	EA	859	$ 4 16	$ 33 28
0069	20151	MENS SOCKS SOLID CREWS ONE SIZE FITS ALL 80% COTTON, 20% SYNTHETIC WHITE IN COLOR	50	DZ	WC	$ 5 14	$ 257.00
0070	20187	MENS BRIEFS POLYESTER/COTTON BLEND - MEDIUM - WHITE IN COLOR	12	DZ	EBRLS	$ 10 28	$ 123 36
0071	20187	MENS BRIEFS POLYESTER/COTTON BLEND LARGE - WHITE IN COLOR	18	DZ	EBRLS	$ 10 66	$ 191 88
0072	20187	MENS BRIEFS POLYESTER/COTTON BLEND XLARGE - WHITE IN COLOR	12	DZ	EBRLS	$ 11 14	$ 133 68
0073	20187	MENS BRIEFS POLYESTER/COTTON BLEND 2XLARGE - WHITE IN COLOR	8	DZ	EBRLS	$ 11 66	$ 93 28

Bob Barker Company Inc

LINE ITEM DETAIL

INMATE CLOTHING AND SUPPLIES

GALVESTON COUNTY, TEXAS

BID #: B122027
OPEN: 07/17/2012
2:00 PM

VENDOR ID

Item No.	Product Code	Description	Quantity	Units	Catalog #	Unit Price	Extended Price
0074	20187	MENS BRIEFS POLYESTER/COTTON BLEND 3XLARGE - WHITE IN COLOR	4	DZ	EBRLS	$ 12 66	$ 50 64
0075	20186	WOMENS PANTIES KNITTED ELASTIC WAIST & LEG BANDS SIZE 6 - WHITE IN COLOR	4	DZ	ELBLS	$ 7 80	$ 31 20
0076	20186	WOMENS PANTIES KNITTED WAIST & LEG BANDS SIZE 7 - WHITE IN COLOR	8	DZ	ELBLS	$ 8 00	$ 64 00
0077	20186	WOMENS PANTIES KNITTED WAIST & LEG BANDS SIZE 8 - WHITE IN COLOR	8	DZ	ELBLS	$ 8 00	$ 64 00
0078	20186	WOMENS PANTIES KNITTED WAIST & LEG BANDS SIZE 9 - WHITE IN COLOR	4	DZ	ELBLS	$ 8 50	$ 34 00
0079	20186	WOMENS PANTIES KNITTED ELASTIC WAIST & LEG BAND SIZE 10 - WHITE IN COLOR	4	DZ	ELBLS	$ 8 50	$ 34 00

Bob Barker Company Inc

LINE ITEM DETAIL

INMATE CLOTHING AND SUPPLIES

GALVESTON COUNTY, TEXAS

BID #: B122027
OPEN: 07/17/2012
2:00 PM

VENDOR ID

Item No.	Product Code	Description	Quantity	Units	Catalog #	Unit Price	Extended Price
0080	20186	SPORTS BRA - SMALL (32 A/B) Hookless pull-on style No metal or plastic. Wide, non-slip straps, racer-style back. White in color	16	EA	EBASPLS32	$ 1 70	$ 27 20
					** Items 0080-0084 sold by dozen only 20 40/dz		
0081	20186	SPORTS BRA - MEDIUM (34 A/B)	48	EA	EBASPLS34	$ 1 70	$ 81 60
0082	20186	SPORTS BRA - LARGE (36 A/B)	36	EA	EBASPLS36	$ 1 70	$ 61 20
0083	20186	SPORTS BRA - XLARGE (38 A/B)	12	EA	EBASPLS38	$ 1.70	$ 20 40
0084	20186	SPORTS BRA XXLARGE (40-42 B,C&D)	12	EA	EBASPLS40/42	$ 1 70	$ 20 40
0085	80048	SLIP ON TENNIS SHOES - SIZE 5 Heavy weight navy blue canvas uppers White rubber around sole Insoles stitched in place USA made only	1200	PR	155NV	$ 3 28	$ 3936 00
0086	80048	SLIP ON TENNIS SHOES - SIZE 6	1200	PR	155NV	$ 3 28	$ 3936 00

Bob Barker Company Inc

LINE ITEM DETAIL

INMATE CLOTHING AND SUPPLIES

GALVESTON COUNTY, TEXAS

BID #: B122027
OPEN: 07/17/2012
2:00 PM

VENDOR ID

Item No	Product Code	Description	Quantity	Units	Catalog #	Unit Price	Extended Price
0087	80048	SLIP ON TENNIS SHOES - SIZE 7	1200	PR	155NV	$ 3 28	$ 3936 00
0088	80048	SLIP ON TENNIS SHOES - SIZE 8	1200	PR	155NV	$ 3 28	$ 3936 00
0089	80048	SLIP ON TENNIS SHOES - SIZE 9	1200	PR	155NV	$ 3 28	$ 3936 00
0090	80048	SLIP ON TENNIS SHOES - SIZE 10	1200	PR	155NV	$ 3 28	$ 3936.00
0091	80048	SLIP ON TENNIS SHOES - SIZE 11	1200	PR	155NV	$ 3 28	$ 3936 00
0092	80048	SLIP ON TENNIS SHOES - SIZE 12	1200	PR	155NV	$ 3 28	$ 3936 00
0093	80048	SLIP ON TENNIS SHOES - SIZE 13	1200	PR	155NV	$ 3 28	$ 3936 00
0094	80048	SLIP ON TENNIS SHOES - SIZE 14	1200	PR	155NV	$ 3 28	$ 3936 00
0095	80048	SLIP ON TENNIS SHOES - SIZE 15	1200	PR	155NV	$ 3 28	$ 3936 00

Bob Barker Company Inc

LINE ITEM DETAIL

INMATE CLOTHING AND SUPPLIES

GALVESTON COUNTY, TEXAS

BID #: B122027
OPEN: 07/17/2012
2:00 PM

VENDOR ID

Item No.	Product Code	Description	Quantity	Units	Catalog #	Unit Price	Extended Price
0096	80032	SLIP ON SANDALS SIZE SMALL Biochek Antimicrobial PVC Skid resistant sole to reduce risk of falls on wet floors Burgundy in color.	1710	PR	606	$ 2 09	$ 3573 90
0097	80032	SLIP ON SANDALS SIZE MEDIUM	1710	PR	606	$ 2 09	$ 3573 90
0098	80032	SLIP ON SANDALS SIZE LARGE	1710	PR	606	$ 2 09	$ 3573 90
0099	80032	SLIP ON SANDALS SIZE XLARGE	1710	PR	606	$ 2 09	$ 3573 90
0100	80032	SLIP ON SANDALS SIZE XXLARGE	1710	PR	606	$ 2 09	$ 3573 90
0101	80032	SLIP ON SANDALS SIZE 3XLARGE * Note we are bidding 2xl for this size We do not carry 3xl	1710	PR	606	$ 2 09	$ 3573 90
0102	80032	SLIP ON SANDALS SIZE SIZE 5-6 (SMALL)	1710	PR	SABR	$ 1 88	$ 3214 80
0103	80032	SLIP ON SANDALS SIZE 7-8 (MEDIUM)	1710	PR	SABR	$ 1 88	$ 3214 80

Bob Barker Company Inc

LINE ITEM DETAIL

INMATE CLOTHING AND SUPPLIES

GALVESTON COUNTY, TEXAS

BID #: B122027
OPEN: 07/17/2012
2:00 PM

VENDOR ID

Item No.	Product Code	Description	Quantity	Units	Catalog #	Unit Price	Extended Price
0104	80032	SLIP ON SANDALS SIZE 9-10 (LARGE)	1710	PR	SABR	$ 1 88	$ 3214 80
0105	80032	SLIP ON SANDALS SIZE 11-12 (XLARGE)	1710	PR	SABR	$ 1 88	$ 3214 80
0106	80032	SLIP ON SANDALS SIZE 13-14 (XXLARGE)	1710	PR	SABR	$ 1 88	$ 3214 80
0107	95405	TOWELS HEAVY OR PREMIUM WEIGHT 100% COTTON MINIMUM 5 5 LBS PER DOZEN, WHITE IN COLOR IMPORTED OR DOMESTIC PRE-PACKAGED 25 DOZEN PER CASE 20" X 40" IN SIZE	600	DZ	41400	$ 14.40	$ 8640 00
0108	85092	WASHCLOTHS HEAVY OR PREMIUM WEIGHT COTTON 12" X 12" WHITE BATH WASHCLOTH	100	DZ	WC1212	$ 1 94	$ 194 00
0109	61586	VINYL ID WASHABLE TAGS, 1000/ROLL	2	ROLL	LT558	$ 12 00	$ 24 00
0110	51080	NETS, TIE CORD LAUNDRY 24" X 36"	12	DZ	E1824	$ 22 00	$ 264 00
0111	20044	BDU TROUSERS - SMALL/REGULAR Military inspired construction, six (6) pockets, four (4) with button flaps Adjustable waist tab with four (4)	6	EA	ZF5235-25-DN	$ 20 68	$ 124 08

Bob Barker Company Inc

LINE ITEM DETAIL

INMATE CLOTHING AND SUPPLIES

GALVESTON COUNTY, TEXAS

BID #: B122027
OPEN: 07/17/2012
2:00 PM

VENDOR ID

Item No.	Product Code	Description	Quantity	Units	Catalog #	Unit Price	Extended Price
		bartacks Zipper fly with snap closure 65/35 Polyester/Cotton Ripstop Color to be Navy					
0112	20044	BDU TROUSER - MEDIUM/REGULAR Color to be Navy	15	EA	ZF5235-25-DN	$ 20 68	$ 310 20
0113	20044	BDU TROUSER - LARGE/REGULAR Color to be Navy	15	EA	ZF5235-25-DN	$ 20 68	$ 310.20
0114	20044	BDU TROUSER - XLARGE/REGULAR Color to be Navy	6	EA	ZF5235-25-DN	$ 20 68	$ 124 08
0115	20044	BDU TROUSER - 2XLARGE/REGULAR Color to be Navy	4	EA	ZF5235-25-DN	$ 20 68	$ 82 72

Extended Price Total of all Item $ 291,550 75

BID #: B122027
OPEN: 07/19/2012
2:00 PM

INMATE CLOTHNG AND SUPPLIES
GALVESTON COUNTY, TEXAS

COMPANY INFORMATION BID FORM

THE COMPANY OF Robinson Textiles

Address 152 W. Walnut St. Ste 250
Gardena CA 90248

FEIN (TAX ID) 953447044

The following shall be returned with your bid Failure to do so may be ample cause for rejection of bid as non responsive It is the responsibility of the Bidder to ensure that Bidder has received all addenda

Items:	Confirmed (X):
1. **References (if required)**	X
2. **Addenda, if any.**	#1____ #2____ #3____ #4 __
3. **One (1) original and four (4) copies of submittal**	X
4. **Vendor Qualification packet**	X
5. **Payment Terms:**	X net 30 _____Other

Person to contact regarding this bid Cindy Murphy

Title Salesperson Phone 8004215582 Fax 8003707019

E-mail address robtexemail@AOL.com

Name of person authorized to bind the Company Jennifer L Kutsch

Signature Jennifer L Kutsch Date 7-13-12

Title Vice President Phone 8004215582 Fax 8003707019

E-mail address robtexemail@AOL.com

BID #: B122027
OPEN: 07/19/2012
2.00 PM

INMATE CLOTHNG AND SUPPLIES
GALVESTON COUNTY, TEXAS

SECTION TOTAL BID FORM

Having read and understood the instructions, terms, conditions, specifications, and invitation to bid we submit the following

SECTION	TOTAL AMOUNT
Section I – Bedding, line items 1 – 6	NO Bid
Section II – Work shirts and Pants, line items 7- 43	146447.05
Section III – Recreational Clothing, line items 44 – 69	NO Bid
Section IV – Undergarments, line items 70 – 84	
Section V – Footwear, line items 85 – 106	
Section VI – Towels and Linens, line items 107 – 108	
Section VII – Laundry Items and Accessories, line items 109 – 110	
Section VIII – BDU Trousers, line items 111 - 115	

LINE ITEM DETAIL

INMATE CLOTHING AND SUPPLIES

GALVESTON COUNTY, TEXAS

BID #: B122027
OPEN: 07/17/2012
2:00 PM

VENDOR ID 184358 ROBINSON TEXTILES INC

Item No	Product Code	Description	Quantity	Units	Catalog #	Unit Price	Extended Price
0001	85012	COTTON YEAR ROUND THERMAL BLANKET 100% cotton snag free closed weave blanket Preshrunk 6" selvaged sides and stitched ends to prevent dismantling Color to be white Weight approximately 2 5 lbs Size of 66 x 90 Thread count warp 48 ends per inch comprised of 10/1 and 20/2 yarn Thread count fill 30 per inch in 16/1 yarn	1000	EA		$	$ NO Bid
0002	85012	BLANKETS, 100% FIBER WOVEN POLYESTER Using center scrim that binds fibers together Tightly woven, will not pill, shred or mat even after washing 66" x 90" Color to be blue or navy Flame resistant, hemmed on all four (4) sides, seamless construction Machine washable	48	EA		$	$
0003	85052	MATTRESS COVER - VINYL To be made of "Healthguard" anti-microbial vinyl material, made from heavy duty vinyl, fire retardant, tear resistant, antibacterial Seams for	450	EA		$	$

LINE ITEM DETAIL

INMATE CLOTHING AND SUPPLIES

GALVESTON COUNTY, TEXAS

BID #: B122027
OPEN: 07/17/2012
2:00 PM

VENDOR ID 184358 ROBINSON TEXTILES INC

Item No	Product Code	Description	Quantity	Units	Catalog #	Unit Price	Extended Price
		double-needle, lock-stitch, sewn with heavy duty nylon for long lasting durability Mattress cover is first quality Mildew and stain resistant Made of two layers of vinyl (12 2 ounce per square yard) bonded to scrim cloth This type of cover can be cleaned with mild, soapy water and/or Sani-Cloth Wipes. Cover to fit mattress size 30" x 72" x 4" Color should be green					
0004	85052	MATTRESS COVERS TWILL Slip on mattress cover Cover is a green color Twill 65% polyester, 35% combed cotton industrial finish fabric for maximum durability in institutional laundry Seams are single-needle lock-stitch with heavy duty polyester thread Covers to be sewn, overlocked, with no raw edges, exposed to fit mattress 30" x 72" x 4"	1000	EA		$	$ NO Bid
0005	85063	PILLOWS FABRIC COVERED MICRO GUARD Sixe 20" x 26", white in color	40	EA		$	$

LINE ITEM DETAIL

INMATE CLOTHING AND SUPPLIES

GALVESTON COUNTY, TEXAS

BID # B122027
OPEN: 07/17/2012
2:00 PM

VENDOR ID 184358 ROBINSON TEXTILES INC

Item No.	Product Code	Description	Quantity	Units	Catalog #	Unit Price	Extended Price
0006	85064	CLOTH PILLOW CASES WHITE IN COLOR	8	DZ		$	$
0007	20085	V-NECK WORK SHIRTS - SMALL V-neck slip-on reglan sleeve No buttons One pocket over left breast double needle lock stitched and bartacked All seams three (3) needle felled Sleeve and bottom hems double folded and lock stitched with bartacks at neck Bias to be cleanly finished with no raw edges exposed Labels to be woven polyester 2 1/2" x 1 1/4" color coded by size Fabric to be 7 1/2 oz Twill, 65% Polyester combed cotton equal to Graniteville Mills 20/20 industrial laundry finish fabric Thread to be same color as the fabric All three (3) needle seams shall be cleanly finished and have no raw or frayed edges SAMPLE OF ONE SHIRT MUST BE SUBMITTED WITH BID Colors to be gray, navy, orange, khaki, and green Logo on back "GALVESTON COUNTY JAIL"	1625	EA	RTVS	$ 3.90	$ 6337.50

LINE ITEM DETAIL

INMATE CLOTHING AND SUPPLIES

GALVESTON COUNTY, TEXAS

BID #: B122027
OPEN: 07/17/2012
2:00 PM

VENDOR ID 184358 ROBINSON TEXTILES INC

Item No	Product Code	Description	Quantity	Units	Catalog #	Unit Price	Extended Price
0008	20085	V-NECK WORK SHIRTS - MEDIUM	1625	EA	RTVS	$ 3.90	$ 6337.50
0009	20085	V-NECK WORK SHIRTS - LARGE	1625	EA	RTVS	$ 4.80	$ 7800.00
0010	20085	V-NECK WORK SHIRTS - X-LARGE	1625	EA	RTVS	$ 4.80	$ 7800.00
0011	20085	V-NECK WORK SHIRTS - XXLARGE	1625	EA	RTVS	$ 4.80	$ 7800.00
0012	20085	V-NECK WORK SHIRTS - XXXLARGE	1625	EA	RTVS	$ 4.80	$ 7800.00
0013	20085	V-NECK WORK SHIRTS 4X-LARGE	1625	EA	RTVS	$ 4.80	$ 7800.00
0014	20085	V-NECK WORK SHIRTS - 5X-LARGE	1625	EA	RTVS	$ 4.80	$ 7800.00
0015	20085	V-NECK WORK SHIRTS - SMALL MENS V-neck slip-on reglan sleeve No buttons One pocket over left breast double needle lock stitched and bartacked All seams three (3) needle felled Sleeve and bottom hems double folded and lock stitched with bartacks at neck Bias to be cleanly finished	4	EA	RTVS	$ 3.90	$ 15.60

LINE ITEM DETAIL

INMATE CLOTHING AND SUPPLIES

GALVESTON COUNTY, TEXAS

BID #. B122027
OPEN: 07/17/2012
2 00 PM

VENDOR ID 184358 ROBINSON TEXTILES INC

Item No	Product Code	Description	Quantity	Units	Catalog #	Unit Price	Extended Price
		with no raw edges exposed Labels to be woven polyester 2 1/2" x 1 1/4" color coded by size Fabric to be 7 1/2 oz Twill, 65% Polyester combed cotton equal to Graniteville Mills 20/20 industrial laundry finish fabric Thread to be same color as the fabric All three (3) needle seams shall be cleanly finished and have no raw or frayed edges SAMPLE OF ONE SHIRT MUST BE SUBMITTED WITH BID Color to be orange Logo on back "TLC"					
0016	20085	V-NECK WORK SHIRTS - MEDIUM - MENS	8	EA	RTVS	$ 3.90	$ 31.20
0017	20085	V-NECK WORK SHIRTS - LARGE - MENS	8	EA	RTVS	$ 4.80	$ 38.40
0018	20085	V-NECK WORK SHIRTS X-LARGE - MENS	8	EA	RTVS	$ 4.80	$ 38.40
0019	20085	V-NECK WORK SHIRTS - XXLARGE - MENS	4	EA	RTVS	$ 4.80	$ 19.20
0020	20092	WORK PANTS - XSMALL - MENS Slip on elastic wasit with mock fly Elastic to be woven 1 1/2" heat resistant 26 gauge rubber, four rows	1735	EA	RTEP	$ 4.50	$ 7807.50

LINE ITEM DETAIL

INMATE CLOTHING AND SUPPLIES

GALVESTON COUNTY, TEXAS

BID #: B122027
OPEN: 07/17/2012
2:00 PM

VENDOR ID 184358 ROBINSON TEXTILES INC

Item No.	Product Code	Description	Quantity	Units	Catalog #	Unit Price	Extended Price
		of lock stitched to pants (chain stitching is not acceptable) Elastic to be guaranteed for life of the garment from losing its elasticity Labels to be woven polyester 2 1/2" x 1 1/4" color coded by size All seams three (3) needle felled Crotch mock fly to be sew serged, double needle lock stitched and bartacked Leg hems double folded and lock stitched All inseams to be 32" hemmed Fabric to be 7 1/2 oz Twill 65% Polyester, 35% combed cotton equal to Graniteville 20/20 twill industrial laundry finish Thread to be the same color as the fabric All three (3) needle seams shall be clearly finished and have no raw or frayed edges SAMPLE OF ONE PAIR OF PANTS MUST BE SUBMITTED WITH BID Colors to be gray, orange, khaki, and green					
0021	20092	WORK PANTS - SMALL MENS	1735	EA	RTEP	$ 4.50	$ 7807.50

LINE ITEM DETAIL

INMATE CLOTHING AND SUPPLIES

GALVESTON COUNTY, TEXAS

BID #: B122027
OPEN: 07/17/2012
2:00 PM

VENDOR ID 184358 ROBINSON TEXTILES INC

Item No.	Product Code	Description	Quantity	Units	Catalog #	Unit Price	Extended Price
0022	20092	WORK PANTS - MEDIUM - MENS	1735	EA	RTEP	$ 4.50	$ 7807.50
0023	20092	WORK PANTS - LARGE - MENS	1735	EA	RTEP	$ 5.40	$ 9369.00
0024	20092	WORK PANTS - XLARGE - MENS	1735	EA	RTEP	$ 5.40	$ 9369.00
0025	20092	WORK PANTS - XXLARGE - MENS	1735	EA	RTEP	$ 5.40	$ 9369.00
0026	20092	WORK PANTS - XXXLARGE - MENS	1735	EA	RTEP	$ 5.40	$ 9369.00
0027	20092	WORK PANTS - 4XLARGE - MENS	1735	EA	RTEP	$ 5.40	$ 9369.00
0028	20092	WORK PANTS - 5XLARGE - MENS	1735	EA	RTEP	$ 5.40	$ 9369.00
0029	20092	WORK PANTS - 6XLARGE - MENS	175	EA	RTEP	$ 6.75	$ 1181.25
0030	20092	WORK PANTS - 7XLARGE - MENS	175	EA	RTEP	$ 6.75	$ 1181.25

LINE ITEM DETAIL

INMATE CLOTHING AND SUPPLIES

GALVESTON COUNTY, TEXAS

BID #: B122027
OPEN: 07/17/2012
2:00 PM

VENDOR ID 184358 ROBINSON TEXTILES INC

Item No	Product Code	Description	Quantity	Units	Catalog #	Unit Price	Extended Price
0031	20092	WORK PANTS - 8XLARGE - MENS	175	EA	RTEP	$ 7.25	$ 1268.75
0032	20092	WORK PANTS - 9XLARGE - MENS	175	EA	RTEP	$ 7.25	$ 1268.75
0033	20092	WORK PANTS - 10XLARGE - MENS	175	EA	RTEP	$ 7.25	$ 1268.75
0034	20092	JUMPSUIT WITH SNAP CLOSURE - SMALL Triple stitch seam construction Heavy duty thread. Elasticized waistband Reinforcing bartacks, color coded size labels Bias and seams to be cleanly finished and have no raw edges or frayed edges Fabric to be 7 1/2 oz Twill, 65% Polyester, 35% combed cotton Colors are to be green and navy	4	EA	RTJ	$ 11.00	$ 44.00
0035	20092	JUMPSUIT WITH SNAP CLOSURE - MEDIUM	8	EA	RTJ	$ 11.00	$ 88.00
0036	20092	JUMPSUIT WITH SNAP CLOSURE - LARGE	12	EA	RTJ	$ 11.00	$ 132.00

LINE ITEM DETAIL

INMATE CLOTHING AND SUPPLIES

GALVESTON COUNTY, TEXAS

BID #: B122027
OPEN: 07/17/2012
2:00 PM

VENDOR ID 184358 ROBINSON TEXTILES INC

Item No.	Product Code	Description	Quantity	Units	Catalog #	Unit Price	Extended Price
0037	20092	JUMPSUIT WITH SNAP CLOSURE - XLARGE	18	EA	RTJ	$ 11.00	$ 198.00
0038	20092	JUMPSUIT WITH SNAP CLOSURE - XXLARGE	18	EA	RTJ	$ 11.00	$ 198.00
0039	20092	JUMPSUIT WITH SNAP CLOSURE - XXXLARGE	12	EA	RTJ	$ 11.00	$ 132.00
0040	20092	JUMPSUIT WITH SNAP CLOSURE - 4XLARGE	8	EA	RTJ	$ 11.00	$ 88.00
0041	20092	JUMPSUIT WITH SNAP CLOSURE - 5XLARGE	4	EA	RTJ	$ 11.00	$ 44.00
0042	20092	JUMPSUIT WITH SNAP CLOSURE - 6XLARGE	4	EA	RTJ	$ 11.00	$ 44.00
0043	20092	JUMPSUIT WITH SNAP CLOSURE - 7XLARGE	4	EA	RTJ	$ 14.00	$ 56.00
0044	20070	100% COTTON T-SHIRTS - MEDIUM - MENS	6	DZ	RTJS	$ NO	$ Bid
0045	20070	100% COTTON T-SHIRTS - LARGE - MENS	12	DZ	RTTS	$	$

LINE ITEM DETAIL

INMATE CLOTHING AND SUPPLIES

GALVESTON COUNTY, TEXAS

BID #: B122027
OPEN: 07/17/2012
2:00 PM

VENDOR ID 184358 ROBINSON TEXTILES INC

Item No.	Product Code	Description	Quantity	Units	Catalog #	Unit Price	Extended Price
0046	20070	100% COTTON T-SHIRTS - XLARGE - MENS	12	DZ		$ ND	$ BID
0047	20070	100% COTTON T-SHIRT - XXLARGE - MENS	4	DZ		$	$
0048	20070	100% COTTON T-SHIRTS - XXXLARGE - MENS	4	DZ		$	$
0049	20010	SWEATPANTS - SMALL COLOR TO BE NAVY	8	EA		$	$
0050	20010	SWEATPANTS - MEDIUM COLOR TO BE NAVY	12	EA		$	$
0051	20010	SWEATPANTS - LARGE COLOR TO BE NAVY	12	EA		$	$
0052	20010	SWEATPANTS - XLARGE COLOR TO BE NAVY	12	EA		$	$
0053	20010	SWEATPANTS - XXLARGE COLOR TO BE NAVY	8	EA		$	$

LINE ITEM DETAIL

INMATE CLOTHING AND SUPPLIES

GALVESTON COUNTY, TEXAS

BID #: B122027
OPEN: 07/17/2012
2:00 PM

VENDOR ID 184358 ROBINSON TEXTILES INC

Item No	Product Code	Description	Quantity	Units	Catalog #	Unit Price	Extended Price
0054	20010	SWEATPANTS - XXXLARGE COLOR TO BE NAVY	4	EA		$ NO	$ Bid
0055	20010	CREW NECK SWEATSHIRT - MEDIUM COLOR TO BE GRAY	8	EA		$	$
0056	20010	CREW NECK SWEATSHIRT - LARGE COLOR TO BE GREY	12	EA		$	$
0057	20010	CREW NECK SWEATSHIRT - XLARGE COLOR TO BE GREY	12	EA		$	$
0058	20010	CREW NECK SWEATSHIRT - XXLARGE COLOR TO BE GREY	8	EA		$	$
0059	20010	CREW NECK SWEATSHIRT - XXXLARGE COLOR TO BE GREY	4	EA		$	$
0060	20010	CREW NECK SWEATSHIRT - MEDIUM ORANGE IN COLOR LOGO ON BACK "TLC"	10	EA		$	$

LINE ITEM DETAIL

INMATE CLOTHING AND SUPPLIES

GALVESTON COUNTY, TEXAS

BID #: B122027
OPEN: 07/17/2012
2:00 PM

VENDOR ID 184358 ROBINSON TEXTILES INC

Item No.	Product Code	Description	Quantity	Units	Catalog #	Unit Price	Extended Price
0061	20010	CREW NECK SWEATSHIRT - LARGE ORANGE IN COLOR LOGO ON BACK "TLC"	10	EA		$ NO	$ Bid
0062	20010	CREW NECK SWEATSHIRT - XLARGE ORANGE IN COLOR LOGO ON BACK "TLC"	5	EA		$	$
0063	20010	CREW NECK SWEATSHIRT - XXLARGE ORANGE IN COLOR LOGO ON BACK "TLC"	3	EA		$	$
0064	20010	JERSEY KNIT PRACTICE SHORTS - MEDIUM Triple sewn, soft cotton/poly blend jersey knit 6" inseam with covered elastic waistband No pockets or drawstrings Navy in color	24	EA		$	$
0065	20010	JERSEY KNIT PRACTICE SHORTS - LARGE	24	EA		$	$
0066	20010	JERSEY KNIT PRACTICE SHORTS - XLARGE	36	EA		$	$

LINE ITEM DETAIL

INMATE CLOTHING AND SUPPLIES

GALVESTON COUNTY, TEXAS

BID #: B122027
OPEN: 07/17/2012
2:00 PM

VENDOR ID 184358 ROBINSON TEXTILES INC

Item No	Product Code	Description	Quantity	Units	Catalog #	Unit Price	Extended Price
0067	20010	JERSEY KNIT PRACTICE SHORTS - 2XLARGE	24	EA		$ NO	$ Bid
0068	20010	JERSEY KNIT PRACTICE SHORTS - 3XLARGE	8	EA		$	$
0069	20151	MENS SOCKS SOLID CREWS ONE SIZE FITS ALL 80% COTTON, 20% SYNTHETIC WHITE IN COLOR	50	DZ		$	$
0070	20187	MENS BRIEFS POLYESTER/COTTON BLEND - MEDIUM - WHITE IN COLOR	12	DZ		$	$
0071	20187	MENS BRIEFS POLYESTER/COTTON BLEND LARGE - WHITE IN COLOR	18	DZ		$	$
0072	20187	MENS BRIEFS POLYESTER/COTTON BLEND XLARGE - WHITE IN COLOR	12	DZ		$	$
0073	20187	MENS BRIEFS POLYESTER/COTTON BLEND 2XLARGE - WHITE IN COLOR	8	DZ		$	$

LINE ITEM DETAIL

INMATE CLOTHING AND SUPPLIES

GALVESTON COUNTY, TEXAS

BID #: B122027
OPEN: 07/17/2012
2:00 PM

VENDOR ID 184358 ROBINSON TEXTILES INC

Item No	Product Code	Description	Quantity	Units	Catalog #	Unit Price	Extended Price
0074	20187	MENS BRIEFS POLYESTER/COTTON BLEND 3XLARGE - WHITE IN COLOR	4	DZ		$ NO	$ Bid
0075	20186	WOMENS PANTIES KNITTED ELASTIC WAIST & LEG BANDS SIZE 6 - WHITE IN COLOR	4	DZ		$	$
0076	20186	WOMENS PANTIES KNITTED WAIST & LEG BANDS SIZE 7 - WHITE IN COLOR	8	DZ		$	$
0077	20186	WOMENS PANTIES KNITTED WAIST & LEG BANDS SIZE 8 - WHITE IN COLOR	8	DZ		$	$
0078	20186	WOMENS PANTIES KNITTED WAIST & LEG BANDS SIZE 9 - WHITE IN COLOR	4	DZ		$	$
0079	20186	WOMENS PANTIES KNITTED ELASTIC WAIST & LEG BAND SIZE 10 - WHITE IN COLOR	4	DZ		$	$

LINE ITEM DETAIL

INMATE CLOTHING AND SUPPLIES

GALVESTON COUNTY, TEXAS

BID #: B122027
OPEN. 07/17/2012
2:00 PM

VENDOR ID 184358 ROBINSON TEXTILES INC

Item No.	Product Code	Description	Quantity	Units	Catalog #	Unit Price	Extended Price
0080	20186	SPORTS BRA - SMALL (32 A/B) Hookless pull-on style No metal or plastic Wide, non-slip straps, racer-style back White in color	16	EA		$ NO	$ Bid
0081	20186	SPORTS BRA - MEDIUM (34 A/B)	48	EA		$	$
0082	20186	SPORTS BRA - LARGE (36 A/B)	36	EA		$	$
0083	20186	SPORTS BRA - XLARGE (38 A/B)	12	EA		$	$
0084	20186	SPORTS BRA XXLARGE (40-42 B,C&D)	12	EA		$	$
0085	80048	SLIP ON TENNIS SHOES - SIZE 5 Heavy weight navy blue canvas uppers White rubber around sole Insoles stitched in place USA made only	1200	PR		$	$
0086	80048	SLIP ON TENNIS SHOES - SIZE 6	1200	PR		$	$

LINE ITEM DETAIL

INMATE CLOTHING AND SUPPLIES

GALVESTON COUNTY, TEXAS

BID # B122027
OPEN. 07/17/2012
2·00 PM

VENDOR ID 184358 ROBINSON TEXTILES INC

Item No.	Product Code	Description	Quantity	Units	Catalog #	Unit Price	Extended Price
0087	80048	SLIP ON TENNIS SHOES - SIZE 7	1200	PR		$ NO	$ Bid
0088	80048	SLIP ON TENNIS SHOES - SIZE 8	1200	PR		$	$
0089	80048	SLIP ON TENNIS SHOES - SIZE 9	1200	PR		$	$
0090	80048	SLIP ON TENNIS SHOES - SIZE 10	1200	PR		$	$
0091	80048	SLIP ON TENNIS SHOES - SIZE 11	1200	PR		$	$
0092	80048	SLIP ON TENNIS SHOES - SIZE 12	1200	PR		$	$
0093	80048	SLIP ON TENNIS SHOES - SIZE 13	1200	PR		$	$
0094	80048	SLIP ON TENNIS SHOES - SIZE 14	1200	PR		$	$
0095	80048	SLIP ON TENNIS SHOES - SIZE 15	1200	PR		$	$

LINE ITEM DETAIL

INMATE CLOTHING AND SUPPLIES

GALVESTON COUNTY, TEXAS

BID #: B122027
OPEN: 07/17/2012
2:00 PM

VENDOR ID 184358 ROBINSON TEXTILES INC

Item No	Product Code	Description	Quantity	Units	Catalog #	Unit Price	Extended Price
0096	80032	SLIP ON SANDALS SIZE SMALL Biochek Antimicrobial PVC Skid resistant sole to reduce risk of falls on wet floors Burgundy in color	1710	PR		$ NO	$ Bid
0097	80032	SLIP ON SANDALS SIZE MEDIUM	1710	PR		$	$
0098	80032	SLIP ON SANDALS SIZE LARGE	1710	PR		$	$
0099	80032	SLIP ON SANDALS SIZE XLARGE	1710	PR		$	$
0100	80032	SLIP ON SANDALS SIZE XXLARGE	1710	PR		$	$
0101	80032	SLIP ON SANDALS SIZE 3XLARGE	1710	PR		$	$
0102	80032	SLIP ON SANDALS SIZE SIZE 5-6 (SMALL)	1710	PR		$	$
0103	80032	SLIP ON SANDALS SIZE 7-8 (MEDIUM)	1710	PR		$	$

LINE ITEM DETAIL

INMATE CLOTHING AND SUPPLIES

GALVESTON COUNTY, TEXAS

BID #. B122027
OPEN: 07/17/2012
2:00 PM

VENDOR ID 184358 ROBINSON TEXTILES INC

Item No.	Product Code	Description	Quantity	Units	Catalog #	Unit Price	Extended Price
0104	80032	SLIP ON SANDALS SIZE 9-10 (LARGE)	1710	PR		$ NO	$ BID
0105	80032	SLIP ON SANDALS SIZE 11-12 (XLARGE)	1710	PR		$	$
0106	80032	SLIP ON SANDALS SIZE 13-14 (XXLARGE)	1710	PR		$	$
0107	95405	TOWELS HEAVY OR PREMIUM WEIGHT 100% COTTON MINIMUM 5 5 LBS PER DOZEN, WHITE IN COLOR IMPORTED OR DOMESTIC PRE-PACKAGED 25 DOZEN PER CASE 20" X 40" IN SIZE	600	DZ		$	$
0108	85092	WASHCLOTHS HEAVY OR PREMIUM WEIGHT COTTON 12" X 12" WHITE BATH WASHCLOTH	100	DZ		$	$
0109	61586	VINYL ID WASHABLE TAGS, 1000/ROLL	2	ROLL		$	$
0110	51080	NETS, TIE CORD LAUNDRY 24" X 36"	12	DZ		$	$
0111	20044	BDU TROUSERS - SMALL/REGULAR Military inspired construction, six (6) pockets, four (4) with button flaps Adjustable waist tab with four (4)	6	EA		$	$

LINE ITEM DETAIL

INMATE CLOTHING AND SUPPLIES

GALVESTON COUNTY, TEXAS

BID #. B122027
OPEN 07/17/2012
2:00 PM

VENDOR ID 184358 ROBINSON TEXTILES INC

Item No.	Product Code	Description	Quantity	Units	Catalog #	Unit Price	Extended Price
		bartacks Zipper fly with snap closure 65/35 Polyester/Cotton Ripstop Color to be Navy				NO	Bid
0112	20044	BDU TROUSER - MEDIUM/REGULAR Color to be Navy	15	EA		$	$
0113	20044	BDU TROUSER - LARGE/REGULAR Color to be Navy	15	EA		$	$
0114	20044	BDU TROUSER - XLARGE/REGULAR Color to be Navy	6	EA		$	$
0115	20044	BDU TROUSER - 2XLARGE/REGULAR Color to be Navy	4	EA		$	$

Extended Price Total of all Iten $ 146447.05

BID #: B122027
OPEN: 07/19/2012
2:00 PM

INMATE CLOTHNG AND SUPPLIES
GALVESTON COUNTY, TEXAS

COMPANY INFORMATION BID FORM

THE COMPANY OF ICS Jail Supplies, Inc

Address P.O Box 21056
Waco, TX 76702-1056
Phone 800-524-5427 Fax 254-751-029~
WWW ICSWACO COM
bids@icswaco.com

FEIN (TAX ID) FED ID# 27-1494351
GSA Contact # GS 07F-0552U

The following shall be returned with your bid Failure to do so may be ample cause for rejection of bid as non responsive It is the responsibility of the Bidder to ensure that Bidder has received all addenda

Items:	Confirmed (X):
1. **References (if required)**	_____
2. **Addenda, if any.**	#1____ #2____ #3____ #4 ___
3. **One (1) original and four (4) copies of submittal**	X
4. **Vendor Qualification packet**	X
5. **Payment Terms:**	X **net 30** _____ **Other**

Person to contact regarding this bid Lauriann Williams

Title Bid Manager Phone 800 524 5427 Fax 254-751 0299

E-mail address bids@icswaco.com

Name of person authorized to bind the Company J.M. Bogan III

Signature [signature] Date 7/9/12

Title Vice President Phone 800 524 5427 Fax 254-751 0299

E-mail address bids@icswaco.com

ICS Jail Supplies, Inc
PO Box 21056
Waco, TX 76702-1056
Phone 800-524-5427 Fax 254-751-029~
WWW ICSWACO COM
bids@icswaco.com
FED ID# 27-1494351
GSA Contact # GS 07F-0552U

BID #: B122027
OPEN: 07/19/2012
2:00 PM

INMATE CLOTHNG AND SUPPLIES
GALVESTON COUNTY, TEXAS

SECTION TOTAL BID FORM

Having read and understood the instructions, terms, conditions, specifications, and invitation to bid we submit the following

SECTION	TOTAL AMOUNT
Section I – Bedding, line items 1 – 6	17,200 92
Section II – Work shirts and Pants, line items 7- 43	188,868 53
Section III – Recreational Clothing, line items 44 – 69	2,852.44
Section IV – Undergarments, line items 70 – 84	1,212 32
Section V – Footwear, line items 85 – 106	76,195.20
Section VI – Towels and Linens, line items 107 – 108	8,988 00
Section VII – Laundry Items and Accessories, line items 109 – 110	713.32
Section VIII – BDU Trousers, line items 111 - 115	1,332.50

ICS Jail Supplies, Inc.
PO Box 21056
Waco, TX 76702-1056
Phone 800-524-5427 Fax 254-751-0299
WWW.ICSWACO.COM
bids@icswaco.com
FED ID# 27-1494351
GSA Contact # GS 07F-0502

ICS Jail Supplies, Inc
PO Box 21056
Waco, TX 76702-1056
Phone 800-524-5427 Fax 254-751-0298
WWW ICSWACO COM
bids@icswaco com
FED ID# 27-1494351
GSA Contact # GS 07F-0552U

LINE ITEM DETAIL

INMATE CLOTHING AND SUPPLIES

GALVESTON COUNTY, TEXAS

BID # B122027
OPEN: 07/17/2012
2.00 PM

VENDOR ID 408401 ICS JAIL SUPPLIES INC

Item No	Product Code	Description	Quantity	Units	Catalog #	Unit Price	Extended Price
0001	85012	COTTON YEAR ROUND THERMAL BLANKET 100% cotton snag free closed weave blanket Preshrunk 6" selvaged sides and stitched ends to prevent dismantling Color to be white Weight approximately 2 5 lbs Size of 66 x 90 Thread count warp 48 ends per inch comprised of 10/1 and 20/2 yarn Thread count fill 30 per inch in 16/1 yarn	1000	EA	L027	$ 5.21	$ 5,210.00
0002	85012	BLANKETS, 100% FIBER WOVEN POLYESTER Using center scrim that binds fibers together Tightly woven, will not pill, shred or mat even after washing 66" x 90" Color to be ~~blue or navy~~ grey w/blue stripe Flame resistant, hemmed on all four (4) sides, seamless construction Machine washable	48	EA	L012	$ 5.25	$ 252.00
0003	85052	MATTRESS COVER - VINYL To be made of "~~Healthguard~~ SureCheck" anti-microbial vinyl material, made from heavy duty vinyl, fire retardant, tear resistant, antibacterial Seams for	450	EA	L028R pm	$ 10.94	$ 4,923.00

ICS Jail Supplies, Inc.
PO Box 21056
Waco, TX 76702-1056
Phone 800-524-5427 Fax 254-751-0299
WWW ICSWACO COM
bids@icswaco com
FED ID# 27-1494351
GSA Contact # GS 07F-0552U

LINE ITEM DETAIL

INMATE CLOTHING AND SUPPLIES

GALVESTON COUNTY, TEXAS

BID #: B122027
OPEN 07/17/2012
2 00 PM

VENDOR ID 408401 ICS JAIL SUPPLIES INC

Item No	Product Code	Description	Quantity	Units	Catalog #	Unit Price	Extended Price
		double-needle, lock-stitch, sewn with heavy duty nylon for long lasting durability Mattress cover is first quality Mildew and stain resistant Made of two layers of vinyl (12 2 ounce per square yard) bonded to scrim cloth This type of cover can be cleaned with mild, soapy water and/or Sani-Cloth Wipes Cover to fit mattress size 30" x 72" x 4" Color should be green					
0004	85052	MATTRESS COVERS TWILL Slip on mattress cover Cover is a green color Twill 65% polyester, 35% combed cotton industrial finish fabric for maximum durability in institutional laundry Seams are single-needle lock-stitch with heavy duty polyester thread Covers to be sewn, overlocked, with no raw edges, exposed to fit mattress 30" x 72" x 4"	1000	EA	L0253R	$ 6.44	$ 6,440.00
0005	85063	PILLOWS FABRIC COVERED MICRO GUARD Size 20" x 26", white in color	40	EA	SG220	$ 7.00	$ 280.00

ICS Jail Supplies, Inc
PO Box 21056
Waco, TX 76702-1056
Phone 800-524-5427 Fax 254-751-0299
WWW ICSWACO COM
bids@icswaco com
FED ID# 27-1404351
GSA Contact # GS 07F-0552U

LINE ITEM DETAIL

INMATE CLOTHING AND SUPPLIES

GALVESTON COUNTY, TEXAS

BID #· B122027
OPEN: 07/17/2012
2:00 PM

VENDOR ID 408401 ICS JAIL SUPPLIES INC

Item No.	Product Code	Description	Quantity	Units	Catalog #	Unit Price	Extended Price
0006	85064	CLOTH PILLOW CASES WHITE IN COLOR	8	DZ	L022	$ 11 99	$ 95 92
0007	20085	V-NECK WORK SHIRTS - SMALL V-neck slip-on reglan sleeve No buttons One pocket over left breast double needle lock stitched and bartacked All seams three (3) needle felled Sleeve and bottom hems double folded and lock stitched with bartacks at neck Bias to be cleanly finished with no raw edges exposed Labels to be woven polyester 2 1/2" x 1 1/4" color coded by size Fabric to be 7 1/2 oz Twill, 65% Polyester combed cotton equal to Graniteville Mills 20/20 industrial laundry finish fabric Thread to be ~~same color as the fabric~~ white All three (3) needle seams shall be cleanly finished and have no raw or frayed edges SAMPLE OF ONE SHIRT MUST BE SUBMITTED WITH BID Colors to be gray, navy, orange, khaki, and green Logo on back "GALVESTON COUNTY JAIL"	1625	EA	CS005	$ 5.75	$ 9,343.75

ICS Jail Supplies, Inc
PO Box 21056
Waco, TX 76702-1056
Phone 800-524-5427 Fax 254-751-0299
WWW ICSWACO COM
bids@icswaco com
FED ID# 27-1494351
GSA Contact # GS 07F-0552U

LINE ITEM DETAIL

INMATE CLOTHING AND SUPPLIES

GALVESTON COUNTY, TEXAS

BID #. B122027
OPEN 07/17/2012
2:00 PM

VENDOR ID 408401 ICS JAIL SUPPLIES INC

Item No	Product Code	Description	Quantity	Units	Catalog #	Unit Price	Extended Price
0008	20085	V-NECK WORK SHIRTS - MEDIUM	1625	EA	CS005	$ 5.75	$ 9,343 75
0009	20085	V-NECK WORK SHIRTS - LARGE	1625	EA	CS005	$ 5.75	$ 9,343 75
0010	20085	V-NECK WORK SHIRTS - X-LARGE	1625	EA	CS005	$ 5.75	$ 9,343.75
0011	20085	V-NECK WORK SHIRTS - XXLARGE	1625	EA	CS005	$ 5.75	$ 9,343.75
0012	20085	V-NECK WORK SHIRTS - XXXLARGE	1625	EA	CS005	$ 7.25	$ 11,781.25
0013	20085	V-NECK WORK SHIRTS 4X-LARGE	1625	EA	CS005	$ 7.25	$ 11,781.25
0014	20085	V-NECK WORK SHIRTS - 5X-LARGE	1625	EA	CS005	$ 7.25	$ 11,781.25
0015	20085	V-NECK WORK SHIRTS - SMALL MENS V-neck slip-on reglan sleeve No buttons One pocket over left breast double needle lock stitched and bartacked All seams three (3) needle felled Sleeve and bottom hems double folded and lock stitched with bartacks at neck Bias to be cleanly finished	4	EA	CS005	$ 5.75	$ 23.00

ICS Jail Supplies, Inc
PO Box 21056
Waco, TX 76702-1056
Phone 800-524-5427 Fax 254-751-0299
WWW ICSWACO COM
bids@icswaco com
FED ID# 27-1494351
GSA Contact # GS 07F-0552U

LINE ITEM DETAIL

INMATE CLOTHING AND SUPPLIES

GALVESTON COUNTY, TEXAS

BID #. B122027
OPEN 07/17/2012
2:00 PM

VENDOR ID 408401 ICS JAIL SUPPLIES INC

Item No	Product Code	Description	Quantity	Units	Catalog #	Unit Price	Extended Price
		with no raw edges exposed Labels to be woven polyester 2 1/2" x 1 1/4" color coded by size Fabric to be 7 1/2 oz Twill, 65% Polyester combed cotton equal to Graniteville Mills 20/20 industrial laundry finish fabric Thread to be ~~same~~ white ~~color as the fabric~~ All three (3) needle seams shall be cleanly finished and have no raw or frayed edges SAMPLE OF ONE SHIRT MUST BE SUBMITTED WITH BID Color to be orange Logo on back "TLC"					
0016	20085	V-NECK WORK SHIRTS - MEDIUM - MENS	8	EA	CS005	$ 5.75	$ 46.00
0017	20085	V-NECK WORK SHIRTS - LARGE - MENS	8	EA	CS005	$ 5.75	$ 46.00
0018	20085	V-NECK WORK SHIRTS X-LARGE - MENS	8	EA	CS005	$ 5.75	$ 46.00
0019	20085	V-NECK WORK SHIRTS - XXLARGE - MENS	4	EA	CS005	$ 5.75	$ 23.00
0020	20092	WORK PANTS - XSMALL - MENS Slip on elastic wasit with mock fly Elastic to be woven 1 1/2" heat resistant 26 gauge rubber, four rows	1735	EA	CS005	$ 5.75	$ 9,976.25

ICS Jail Supplies, Inc.
PO Box 21056
Waco, TX 76702-1056
Phone 800-524-5427 Fax 254-751-0299
WWW ICSWACO COM
bids@icswaco com
FED ID# 27-1494351
GSA Contact # GS 07F-0552U

LINE ITEM DETAIL

INMATE CLOTHING AND SUPPLIES

GALVESTON COUNTY, TEXAS

BID #: B122027
OPEN: 07/17/2012
2:00 PM

VENDOR ID 408401 ICS JAIL SUPPLIES INC

Item No	Product Code	Description	Quantity	Units	Catalog #	Unit Price	Extended Price
		of lock stitched to pants (chain stitching is not acceptable) Elastic to be guaranteed for life of the garment from losing its elasticity Labels to be woven polyester 2 1/2" x 1 1/4" color coded by size All seams three (3) needle felled ~~Crotch mock fly to be sew serged~~, double needle lock stitched and bartacked Leg hems double folded and lock stitched All inseams to be 32" hemmed Fabric to be 7 1/2 oz Twill 65% Polyester, 35% combed cotton equal to Graniteville 20/20 twill industrial laundry finish Thread to be th~~e same color as the fabric~~ white All three (3) needle seams shall be clearly finished and have no raw or frayed edges SAMPLE OF ONE PAIR OF PANTS MUST BE SUBMITTED WITH BID Colors to be gray, orange, khaki, and green					
0021	20092	WORK PANTS - SMALL MENS	1735	EA	CP005	$ 5.75	$ 9,976.25

ICS Jail Supplies, Inc
PO Box 21056
Waco, TX 76702-1056
Phone 800-524-5427 Fax 254-751-0299
WWW ICSWACO COM
bids@icswaco com
FED ID# 27-1494351
GSA Contact # GS 07F-0552U

LINE ITEM DETAIL

INMATE CLOTHING AND SUPPLIES

GALVESTON COUNTY, TEXAS

BID #: B122027
OPEN: 07/17/2012
2 00 PM

VENDOR ID 408401 ICS JAIL SUPPLIES INC

Item No.	Product Code	Description	Quantity	Units	Catalog #	Unit Price	Extended Price
0022	20092	WORK PANTS - MEDIUM - MENS	1735	EA	CP005	$ 5 75	$ 9,976.25
0023	20092	WORK PANTS - LARGE - MENS	1735	EA	CP005	$ 5.75	$ 9,976.25
0024	20092	WORK PANTS - XLARGE - MENS	1735	EA	CP005	$ 5.75	$ 9,976.25
0025	20092	WORK PANTS - XXLARGE - MENS	1735	EA	CP005	$ 5.75	$ 9,976.25
0026	20092	WORK PANTS - XXXLARGE - MENS	1735	EA	CP005	$ 7.25	$ 12,578.75
0027	20092	WORK PANTS - 4XLARGE - MENS	1735	EA	CP005	$ 7.25	$ 12,578.75
0028	20092	WORK PANTS - 5XLARGE - MENS	1735	EA	CP005	$ 7.25	$ 12,578.75
0029	20092	WORK PANTS - 6XLARGE - MENS	175	EA	CP005	$ 9.00	$ 1,575.00
0030	20092	WORK PANTS - 7XLARGE - MENS	175	EA	CP005	$ 9.00	$ 1,575.00

ICS Jail Supplies, Inc.
PO Box 21056
Waco, TX 76702-1056
Phone 800-524-5427 Fax 254-751-0299
WWW ICSWACO COM
bids@cswaco com
FED ID# 27-1494351
GSA Contact # GS 07F-0552U

LINE ITEM DETAIL

INMATE CLOTHING AND SUPPLIES

GALVESTON COUNTY, TEXAS

BID #. B122027
OPEN: 07/17/2012
2·00 PM

VENDOR ID 408401 ICS JAIL SUPPLIES INC

Item No	Product Code	Description	Quantity	Units	Catalog #	Unit Price	Extended Price
0031	20092	WORK PANTS - 8XLARGE - MENS	175	EA	CP005	$ 9.00	$ 1,575.00
0032	20092	WORK PANTS - 9XLARGE - MENS	175	EA	CP005	$ 9.00	$ 1,575.00
0033	20092	WORK PANTS - 10XLARGE - MENS	175	EA	CP005	$ 9.00	$ 1,575.00
0034	20092	JUMPSUIT WITH SNAP CLOSURE - SMALL Triple stitch seam construction Heavy duty thread Elasticized waistband Reinforcing bartacks, color coded size labels Bias and seams to be cleanly finished and have no raw edges or frayed edges Fabric to be 7 1/2 oz Twill, 65% Polyester, 35% combed cotton Colors are to be green and navy	4	EA	C030	$ 11.99	$ 47.96
0035	20092	JUMPSUIT WITH SNAP CLOSURE - MEDIUM	8	EA	C030	$ 11.99	$ 95.92
0036	20092	JUMPSUIT WITH SNAP CLOSURE - LARGE	12	EA	C030	$ 11.99	$ 143.88

ICS Jail Supplies, Inc
PO Box 21056
Waco, TX 76702-1056
Phone 800-524-5427 Fax 254-751-0299
WWW ICSWACO COM
bids@icswaco com
FED ID# 27-1404351
GSA Contact # GS 07F-0552U

LINE ITEM DETAIL

INMATE CLOTHING AND SUPPLIES

GALVESTON COUNTY, TEXAS

BID #: B122027
OPEN: 07/17/2012
2:00 PM

VENDOR ID 408401 ICS JAIL SUPPLIES INC

Item No.	Product Code	Description	Quantity	Units	Catalog #	Unit Price	Extended Price
0037	20092	JUMPSUIT WITH SNAP CLOSURE - XLARGE	18	EA	C030	$ 11.99	$ 215.82
0038	20092	JUMPSUIT WITH SNAP CLOSURE - XXLARGE	18	EA	C030	$ 11.99	$ 215.82
0039	20092	JUMPSUIT WITH SNAP CLOSURE - XXXLARGE	12	EA	C030	$ 11.99	$ 143.88
0040	20092	JUMPSUIT WITH SNAP CLOSURE - 4XLARGE	8	EA	C030	$ 14.50	$ 116.00
0041	20092	JUMPSUIT WITH SNAP CLOSURE - 5XLARGE	4	EA	C030	$ 14.50	$ 58.00
0042	20092	JUMPSUIT WITH SNAP CLOSURE - 6XLARGE	4	EA	C030	$ 14.50	$ 58.00
0043	20092	JUMPSUIT WITH SNAP CLOSURE - 7XLARGE	4	EA	C030	$ 14.50	$ 58.00
0044	20070	100% COTTON T-SHIRTS - MEDIUM - MENS	6	DZ	C049C	$ 15.00	$ 90.00
0045	20070	100% COTTON T-SHIRTS - LARGE - MENS	12	DZ	C049C	$ 15.00	$ 180.00

ICS Jail Supplies, Inc.
P.O Box 21056
Waco, TX 76702-1056
Phone 800-524-5427 Fax 254-751-0299
WWW.ICSWACO.COM
bids@icswaco.com
FED ID# 27-1434351
GSA Contact # GS 07F-0552U

LINE ITEM DETAIL

INMATE CLOTHING AND SUPPLIES

GALVESTON COUNTY, TEXAS

BID # B122027
OPEN: 07/17/2012
2:00 PM

VENDOR ID 408401 ICS JAIL SUPPLIES INC

Item No	Product Code	Description	Quantity	Units	Catalog #	Unit Price	Extended Price
0046	20070	100% COTTON T-SHIRTS - XLARGE - MENS	12	DZ	C049C	$ 15.00	$ 180.00
0047	20070	100% COTTON T-SHIRT - XXLARGE - MENS	4	DZ	C049C	$ 19.00	$ 76.00
0048	20070	100% COTTON T-SHIRTS - XXXLARGE - MENS	4	DZ	C049C	$ 19.00	$ 76.00
0049	20010	SWEATPANTS - SMALL COLOR TO BE NAVY	8	EA	C047X	$ 6.96	$ 55.68
0050	20010	SWEATPANTS - MEDIUM COLOR TO BE NAVY	12	EA	C047X	$ 6.96	$ 83.52
0051	20010	SWEATPANTS - LARGE COLOR TO BE NAVY	12	EA	C047X	$ 6.96	$ 83.52
0052	20010	SWEATPANTS - XLARGE COLOR TO BE NAVY	12	EA	C047X	$ 6.96	$ 83.52
0053	20010	SWEATPANTS - XXLARGE COLOR TO BE NAVY	8	EA	C047X	$ 7.89	$ 63.12

MB

ICS Jail Supplies, Inc
PO. Box 21056
Waco, TX 76702-1056
Phone 800-524-5427 Fax 254-751-0299
WWW ICSWACO COM
bids@icswaco com
FED ID# 27-1494351
GSA Contact # GS 07F-0552U

LINE ITEM DETAIL

INMATE CLOTHING AND SUPPLIES

GALVESTON COUNTY, TEXAS

BID #. B122027
OPEN. 07/17/2012
2:00 PM

VENDOR ID 408401 ICS JAIL SUPPLIES INC

Item No	Product Code	Description	Quantity	Units	Catalog #	Unit Price	Extended Price
0054	20010	SWEATPANTS - XXXLARGE COLOR TO BE NAVY	4	EA	C047X	$ 815	$ 32 60
0055	20010	CREW NECK SWEATSHIRT - MEDIUM COLOR TO BE GRAY	8	EA	C045	$ 696	$ 55.68
0056	20010	CREW NECK SWEATSHIRT - LARGE COLOR TO BE GREY	12	EA	C045	$ 696	$ 83 52
0057	20010	CREW NECK SWEATSHIRT - XLARGE COLOR TO BE GREY	12	EA	C045	$ 696	$ 83 52
0058	20010	CREW NECK SWEATSHIRT - XXLARGE COLOR TO BE GREY	8	EA	C045	$ 789	$ 63.12
0059	20010	CREW NECK SWEATSHIRT - XXXLARGE COLOR TO BE GREY	4	EA	C045	$ 815	$ 32.60
0060	20010	CREW NECK SWEATSHIRT - MEDIUM ORANGE IN COLOR LOGO ON BACK "TLC"	10	EA	C045-O	$ 843	$ 84.30

ICS Jail Supplies, Inc.
PO Box 21056
Waco, TX 76702-1056
Phone 800-524-5427 Fax 254-751-0299
WWW ICSWACO COM
bids@icswaco com
FED ID# 27-1494351
GSA Contact # GS 07F-0552U

LINE ITEM DETAIL

INMATE CLOTHING AND SUPPLIES

GALVESTON COUNTY, TEXAS

BID #: B122027
OPEN: 07/17/2012
2 00 PM

VENDOR ID 408401 ICS JAIL SUPPLIES INC

Item No	Product Code	Description	Quantity	Units	Catalog #	Unit Price	Extended Price
0061	20010	CREW NECK SWEATSHIRT - LARGE ORANGE IN COLOR LOGO ON BACK "TLC"	10	EA	C045-O	$ 8.43	$ 84.30
0062	20010	CREW NECK SWEATSHIRT - XLARGE ORANGE IN COLOR LOGO ON BACK "TLC"	5	EA	C045-O	$ 8.43	$ 42.15
0063	20010	CREW NECK SWEATSHIRT - XXLARGE ORANGE IN COLOR LOGO ON BACK "TLC"	3	EA	C045-O	$ 9.21	$ 27.63
0064	20010	JERSEY KNIT PRACTICE SHORTS - MEDIUM Triple sewn, soft cotton/poly blend jersey knit ~~8"~~ inseam with covered elastic waistband No pockets or drawstrings Navy in color 9" inseam	24	EA	BB848	$ 8.27	$ 198.48
0065	20010	JERSEY KNIT PRACTICE SHORTS - LARGE	24	EA	BB848	$ 8.27	$ 198.48
0066	20010	JERSEY KNIT PRACTICE SHORTS - XLARGE	36	EA	BB848	$ 8.27	$ 297.72

JB

ICS Jail Supplies, Inc
PO. Box 21056
Waco, TX 76702-1056
Phone 800-524-5427 Fax 254-751-0299
WWW1CSWACO COM
bids@icswaco com
FED ID# 27-1494351
GSA Contact # GS 07F-0552U

LINE ITEM DETAIL

INMATE CLOTHING AND SUPPLIES

GALVESTON COUNTY, TEXAS

BID #. B122027
OPEN: 07/17/2012
2:00 PM

VENDOR IE 408401 ICS JAIL SUPPLIES INC

Item No.	Product Code	Description	Quantity	Units	Catalog #	Unit Price	Extended Price
0067	20010	JERSEY KNIT PRACTICE SHORTS - 2XLARGE	24	EA	BB848	$ 9.45	$ 226.80
0068	20010	JERSEY KNIT PRACTICE SHORTS - 3XLARGE	8	EA	BB848	$ 10.96	$ 87.68
0069	20151	MENS SOCKS SOLID CREWS ONE SIZE FITS ALL 80% COTTON, 20% SYNTHETIC WHITE IN COLOR	50	DZ	C0168-10	$ 5.65	$ 282.50
0070	20187	MENS BRIEFS POLYESTER/COTTON BLEND - MEDIUM - WHITE IN COLOR	12	DZ	C051	$ 11.00	$ 132.00
0071	20187	MENS BRIEFS POLYESTER/COTTON BLEND LARGE - WHITE IN COLOR	18	DZ	C051	$ 11.00	$ 198.00
0072	20187	MENS BRIEFS POLYESTER/COTTON BLEND XLARGE - WHITE IN COLOR	12	DZ	C051	$ 11.00	$ 132.00
0073	20187	MENS BRIEFS POLYESTER/COTTON BLEND 2XLARGE - WHITE IN COLOR	8	DZ	C051	$ 13.00	$ 104.00

ICS Jail Supplies, Inc
PO Box 21056
Waco, TX 76702-1056
Phone 800-524-5427 Fax 254-751-0299
WWW.ICSWACO.COM
bids@icswaco.com
FED ID# 27-1434351
GSA Contact # GS 07F-0559J

LINE ITEM DETAIL

INMATE CLOTHING AND SUPPLIES

GALVESTON COUNTY, TEXAS

BID #: B122027
OPEN: 07/17/2012
2:00 PM

VENDOR ID 408401 ICS JAIL SUPPLIES INC

Item No.	Product Code	Description	Quantity	Units	Catalog #	Unit Price	Extended Price
0074	20187	MENS BRIEFS POLYESTER/COTTON BLEND 3XLARGE - WHITE IN COLOR	4	DZ	C051	$ 13.00	$ 52.00
0075	20186	WOMENS PANTIES KNITTED ELASTIC WAIST & LEG BANDS SIZE 6 - WHITE IN COLOR	4	DZ	C062W	$ 8.50	$ 34.00
0076	20186	WOMENS PANTIES KNITTED WAIST & LEG BANDS SIZE 7 - WHITE IN COLOR	8	DZ	C062W	$ 8.50	$ 68.00
0077	20186	WOMENS PANTIES KNITTED WAIST & LEG BANDS SIZE 8 - WHITE IN COLOR	8	DZ	C062W	$ 8.50	$ 68.00
0078	20186	WOMENS PANTIES KNITTED WAIST & LEG BANDS SIZE 9 - WHITE IN COLOR	4	DZ	C062W	$ 8.50	$ 34.00
0079	20186	WOMENS PANTIES KNITTED ELASTIC WAIST & LEG BAND SIZE 10 - WHITE IN COLOR	4	DZ	C062W	$ 8.50	$ 34.00

ICS Jail Supplies, Inc.
PO Box 21056
Waco, TX 76702-1056
Phone 800-524-5427 Fax 254-751-0299
WWW ICSWACO COM
bids@icswaco com
FED ID# 27-1494351
GSA Contact # GS 07F-0552U

LINE ITEM DETAIL

INMATE CLOTHING AND SUPPLIES

GALVESTON COUNTY, TEXAS

BID #: B122027
OPEN: 07/17/2012
2.00 PM

VENDOR ID 408401 ICS JAIL SUPPLIES INC

Item No	Product Code	Description	Quantity	Units	Catalog #	Unit Price	Extended Price
0080	20186	SPORTS BRA - SMALL (32 A/B) Hookless pull-on style No metal or plastic Wide, non-slip straps, racer-style back White in color	16	EA	C1910	$ 2 86	$ 45 76
0081	20186	SPORTS BRA - MEDIUM (34 A/B)	48	EA	C1910	$ 2 86	$ 137 28
0082	20186	SPORTS BRA - LARGE (36 A/B)	36	EA	C1910	$ 2 86	$ 102.96
0083	20186	SPORTS BRA - XLARGE (38 A/B)	12	EA	C1910	$ 2 86	$ 34 32
0084	20186	SPORTS BRA XXLARGE (40-42 B,C&D)	12	EA	C1910	$ 3 00	$ 36 00
0085	80048	SLIP ON TENNIS SHOES - SIZE 5 Heavy weight navy blue canvas uppers White rubber around sole Insoles stitched in place ~~USA made only~~	1200	PR	M143	$ 2 94	$ 3,528 00
0086	80048	SLIP ON TENNIS SHOES - SIZE 6	1200	PR	M143	$ 2 94	$ 3,528 00

ICS Jail Supplies, Inc.
PO Box 21056
Waco, TX 76702-1056
Phone 800-524-5427 Fax 254-751-0299
WWW.ICSWACO.COM
bids@icswaco.com
FED ID# 27-1434351
GSA Contact # GS-07F-0[illegible]

LINE ITEM DETAIL

INMATE CLOTHING AND SUPPLIES

GALVESTON COUNTY, TEXAS

BID #: B122027
OPEN: 07/17/2012
2.00 PM

VENDOR ID 408401 ICS JAIL SUPPLIES INC

Item No	Product Code	Description	Quantity	Units	Catalog #	Unit Price	Extended Price
0087	80048	SLIP ON TENNIS SHOES - SIZE 7	1200	PR	M143	$ 2.94	$ 3,528.00
0088	80048	SLIP ON TENNIS SHOES - SIZE 8	1200	PR	M143	$ 2.94	$ 3,528.00
0089	80048	SLIP ON TENNIS SHOES - SIZE 9	1200	PR	M143	$ 2.94	$ 3,528.00
0090	80048	SLIP ON TENNIS SHOES - SIZE 10	1200	PR	M143	$ 2.94	$ 3,528.00
0091	80048	SLIP ON TENNIS SHOES - SIZE 11	1200	PR	M143	$ 2.94	$ 3,528.00
0092	80048	SLIP ON TENNIS SHOES - SIZE 12	1200	PR	M143	$ 2.94	$ 3,528.00
0093	80048	SLIP ON TENNIS SHOES - SIZE 13	1200	PR	M143	$ 2.94	$ 3,528.00
0094	80048	SLIP ON TENNIS SHOES - SIZE 14	1200	PR	M143	$ 2.94	$ 3,528.00
0095	80048	SLIP ON TENNIS SHOES - SIZE 15	1200	PR	M143	$ 4.00 jm	$ 4,800.00

ICS Jail Supplies, Inc.
P.O Box 21056
Waco, TX 76702-1056
Phone 800-524-5427 Fax 254-751-0299
WWW ICSWACO COM
bids@icswaco com
FED ID# 27-1494351
GSA Contact # GS 07F-0F5211

LINE ITEM DETAIL

INMATE CLOTHING AND SUPPLIES

GALVESTON COUNTY, TEXAS

BID #. B122027
OPEN: 07/17/2012
2:00 PM

VENDOR ID 408401 ICS JAIL SUPPLIES INC

Item No	Product Code	Description	Quantity	Units	Catalog #	Unit Price	Extended Price
0096	80032	SLIP ON SANDALS SIZE SMALL Biochek Antimicrobial PVC Skid resistant sole to reduce risk of falls on wet floors Burgundy in color	1710	PR	M019	$ 1.92	$ 3,283.20
					M019-OR	1.48 orange color	
0097	80032	SLIP ON SANDALS SIZE MEDIUM	1710	PR	M019	$ 1.92	$ 3,283.20
0098	80032	SLIP ON SANDALS SIZE LARGE	1710	PR	M019	$ 192	$ 3,283.20
0099	80032	SLIP ON SANDALS SIZE XLARGE	1710	PR	M019	$ 1.92	$ 3,283.20
0100	80032	SLIP ON SANDALS SIZE XXLARGE	1710	PR	M019	$ 1.92	$ 3,283.20
0101	80032	SLIP ON SANDALS SIZE 3XLARGE	1710	PR	M019	$ 192	$ 3,283.20
0102	80032	SLIP ON SANDALS SIZE SIZE 5-6 (SMALL)	1710	PR	M019	$ 192	$ 3,283.20
0103	80032	SLIP ON SANDALS SIZE 7-8 (MEDIUM)	1710	PR	M019	$ 192	$ 3,283.20

M019-Orange 1.48/pr

ICS Jail Supplies, Inc.
P.O. Box 21056
Waco, TX 76702-1056
Phone 800-524-5427 Fax 254-751-0299
WWW ICSWACO COM
bids@icswaco com
FED ID# 27-1494351
GSA Contact # GS 07F-0552U

LINE ITEM DETAIL

INMATE CLOTHING AND SUPPLIES

GALVESTON COUNTY, TEXAS

BID # B122027
OPEN: 07/17/2012
2:00 PM

VENDOR ID 408401 ICS JAIL SUPPLIES INC

Item No	Product Code	Description	Quantity	Units	Catalog #	Unit Price	Extended Price
0104	80032	SLIP ON SANDALS SIZE 9-10 (LARGE)	1710	PR	M019	$ 1.92	$ 3,283.20
0105	80032	SLIP ON SANDALS SIZE 11-12 (XLARGE)	1710	PR	M019	$ 1.92	$ 3,283.20
0106	80032	SLIP ON SANDALS SIZE 13-14 (XXLARGE)	1710	PR	M019	$ 1.92	$ 3,283.20
0107	95405	TOWELS HEAVY OR PREMIUM WEIGHT 100% COTTON MINIMUM 5 5 LBS PER DOZEN, WHITE IN COLOR IMPORTED OR DOMESTIC PRE-PACKAGED 25 DOZEN PER CASE 20" X 40" IN SIZE	600	DZ	L016	$ 14.66	$ 8,796.00
0108	85092	WASHCLOTHS HEAVY OR PREMIUM WEIGHT COTTON 12" X 12" WHITE BATH WASHCLOTH	100	DZ	L017	$ 1.92	$ 192.00
0109	61586	VINYL ID WASHABLE TAGS, 1000/ROLL	2	ROLL	VCP	$ 129.86	$ 259.72
0110	51080	NETS, TIE CORD LAUNDRY 24" X 36"	12	DZ	L055-36	$ 37.80	$ 453.60
0111	20044	BDU TROUSERS - SMALL/REGULAR Military inspired construction, six (6) pockets, four (4) with button flaps Adjustable waist tab with four (4)	6	EA	BDUT-S	$ 28.75	$ 172.50

ICS Jail Supplies, Inc
PO Box 21056
Waco, TX 76702-1056
Phone 800-524-5427 Fax 254-751-0299
WWW ICSWACO COM
bids@icswaco com
FED ID# 27-1494351
GSA Contact # GS 07F-055

LINE ITEM DETAIL

INMATE CLOTHING AND SUPPLIES

GALVESTON COUNTY, TEXAS

BID #: B122027
OPEN: 07/17/2012
2.00 PM

VENDOR ID 408401 ICS JAIL SUPPLIES INC

Item No	Product Code	Description	Quantity	Units	Catalog #	Unit Price	Extended Price
		bartacks ~~Zipper~~ Button fly with snap closure 65/35 Polyester/Cotton Ripstop Color to be Navy					
0112	20044	BDU TROUSER - MEDIUM/REGULAR Color to be Navy	15	EA	BDUT-M	$ 28.75	$ 431.25
0113	20044	BDU TROUSER - LARGE/REGULAR Color to be Navy	15	EA	BDUT-L	$ 28.75	$ 431.25
0114	20044	BDU TROUSER - XLARGE/REGULAR Color to be Navy	6	EA	BDUT-XL	$ 28.75	$ 172.50
0115	20044	BDU TROUSER - 2XLARGE/REGULAR Color to be Navy	4	EA	BDUT-XX	$ 31.25	$ 125.00
						Extended Price Total of all Item	$ 297,363.23

BID #: B122027
OPEN: 07/19/2012
2:00 PM

INMATE CLOTHNG AND SUPPLIES
GALVESTON COUNTY, TEXAS

COMPANY INFORMATION BID FORM

THE COMPANY OF Charm-Tex

Address 1618 Coney Island Ave
Brooklyn NY 11230

FEIN (TAX ID) 112582405

The following shall be returned with your bid Failure to do so may be ample cause for rejection of bid as non responsive It is the responsibility of the Bidder to ensure that Bidder has received all addenda

Items:	Confirmed (X):
1. References (if required)	✓
2. Addenda, if any.	#1 none #2___ #3___ #4___
3. One (1) original and four (4) copies of submittal	✓
4. Vendor Qualification packet	✓
5. Payment Terms:	Net 30 net 30 ___Other

Person to contact regarding this bid Stan Danzger

Title VP of Sales Phone 718-2528100 Fax 718-258-8303

E-mail address Stan@charm-tex.com

Name of person authorized to bind the Company Stan Danzger

Signature [signature] Date 7/11/12

Title VP of Sales Phone 718-252-8100 Fax 718-258-8303

E-mail address Stan@charm-tex.com

Cherm-Tex

BID #: B122027
OPEN: 07/19/2012
2:00 PM

INMATE CLOTHNG AND SUPPLIES
GALVESTON COUNTY, TEXAS

SECTION TOTAL BID FORM

Having read and understood the instructions, terms, conditions, specifications, and invitation to bid we submit the following:

SECTION	TOTAL AMOUNT
Section I – Bedding, line items 1 – 6	
Section II – Work shirts and Pants, line items 7- 43	
Section III – Recreational Clothing, line items 44 – 69	
Section IV – Undergarments, line items 70 – 84	
Section V – Footwear, line items 85 – 106	
Section VI – Towels and Linens, line items 107 – 108	
Section VII – Laundry Items and Accessories, line items 109 – 110	
Section VIII – BDU Trousers, line items 111 - 115	No Bid

CHARM-TEX
1618 Coney Island Ave
Brooklyn, NY 11230
Phone (718) 252-8100
WWW CHARM-TEX COM

LINE ITEM DETAIL

INMATE CLOTHING AND SUPPLIES

GALVESTON COUNTY, TEXAS

BID # B122027
OPEN: 07/17/2012
2:00 PM

VENDOR ID 700956 CHARM-TEX

Item No	Product Code	Description	Quantity	Units	Catalog #	Unit Price	Extended Price
0001	85012	COTTON YEAR ROUND THERMAL BLANKET 100% cotton snag free closed weave blanket Preshrunk 6" selvaged sides and stitched ends to prevent dismantling Color to be white Weight approximately 2 5 lbs Size of 66 x 90 Thread count warp 48 ends per inch comprised of 10/1 and 20/2 yarn Thread count fill 30 per inch in 16/1 yarn	1000	EA	SNGFREE	$ 7.18	$ 7180 -
0002	85012	BLANKETS, 100% FIBER WOVEN POLYESTER Using center scrim that binds fibers together Tightly woven, will not pill, shred or mat even after washing 66" x 90" Color to be blue or navy Flame resistant, hemmed on all four (4) sides, seamless construction Machine washable	48	EA	BL/XLRVDEN	$ 8.70	$ [illegible]
0003	85052	MATTRESS COVER - VINYL To be made of "Healthguard" anti-microbial vinyl material, made from heavy duty vinyl, fire retardant, tear resistant, antibacterial Seams for	450	EA	MC/30-54VINYL	$ 11.54	$ [illegible]

LINE ITEM DETAIL

INMATE CLOTHING AND SUPPLIES

GALVESTON COUNTY, TEXAS

BID #: B122027
OPEN: 07/17/2012
2:00 PM

VENDOR ID 700956 CHARM-TEX

Item No.	Product Code	Description	Quantity	Units	Catalog #	Unit Price	Extended Price
		double-needle, lock-stitch, sewn with heavy duty nylon for long lasting durability Mattress cover is first quality Mildew and stain resistant Made of two layers of vinyl (12 2 ounce per square yard) bonded to scrim cloth This type of cover can be cleaned with mild, soapy water and/or Sani-Cloth Wipes Cover to fit mattress size 30" x 72" x 4" Color should be green					
0004	85052	MATTRESS COVERS TWILL Slip on mattress cover Cover is a green color Twill 65% polyester, 35% combed cotton industrial finish fabric for maximum durability in institutional laundry Seams are single-needle lock-stitch with heavy duty polyester thread Covers to be sewn, overlocked, with no raw edges, exposed to fit mattress 30" x 72" x 4"	1000	EA	mc/30756 Color from or any	$ 6 18	$ 6180 -
0005	85063	PILLOWS FABRIC COVERED MICRO GUARD Sixe 20" x 26", white in color	40	EA	PL/PC[illegible] Pacific [illegible]	$ 5 18	$ [illegible]

LINE ITEM DETAIL

INMATE CLOTHING AND SUPPLIES

GALVESTON COUNTY, TEXAS

BID #. B122027
OPEN: 07/17/2012
2:00 PM

VENDOR ID 700956 CHARM-TEX

Item No.	Product Code	Description	Quantity	Units	Catalog #	Unit Price	Extended Price
0006	85064	CLOTH PILLOW CASES WHITE IN COLOR	8	DZ	42340130	$ 8.90	$ 71.20
0007	20085	V-NECK WORK SHIRTS - SMALL V-neck slip-on reglan sleeve No buttons One pocket over left breast double needle lock stitched and bartacked All seams three (3) needle felled Sleeve and bottom hems double folded and lock stitched with bartacks at neck. Bias to be cleanly finished with no raw edges exposed Labels to be woven polyester 2 1/2" x 1 1/4" color coded by size Fabric to be 7 1/2 oz Twill, 65% Polyester combed cotton equal to Graniteville Mills 20/20 industrial laundry finish fabric Thread to be same color as the fabric All three (3) needle seams shall be cleanly finished and have no raw or frayed edges SAMPLE OF ONE SHIRT MUST BE SUBMITTED WITH BID Colors to be gray, navy, orange, khaki, and green Logo on back "GALVESTON COUNTY JAIL"	1625	EA		$ No Bid	$ N/B

LINE ITEM DETAIL

INMATE CLOTHING AND SUPPLIES

GALVESTON COUNTY, TEXAS

BID #: B122027
OPEN: 07/17/2012
2:00 PM

VENDOR ID 700956 CHARM-TEX

Item No	Product Code	Description	Quantity	Units	Catalog #	Unit Price	Extended Price
0008	20085	V-NECK WORK SHIRTS - MEDIUM	1625	EA		$ N/B	$ N/B
0009	20085	V-NECK WORK SHIRTS - LARGE	1625	EA		$ N/B	$
0010	20085	V-NECK WORK SHIRTS - X-LARGE	1625	EA		$ N/B	$
0011	20085	V-NECK WORK SHIRTS - XXLARGE	1625	EA		$ N/B	$
0012	20085	V-NECK WORK SHIRTS - XXXLARGE	1625	EA		$ N/B	$
0013	20085	V-NECK WORK SHIRTS 4X-LARGE	1625	EA		$ N/B	$
0014	20085	V-NECK WORK SHIRTS - 5X-LARGE	1625	EA		$ N/B	$
0015	20085	V-NECK WORK SHIRTS - SMALL MENS V-neck slip-on reglan sleeve No buttons One pocket over left breast double needle lock stitched and bartacked All seams three (3) needle felled Sleeve and bottom hems double folded and lock stitched with bartacks at neck Bias to be cleanly finished	4	EA		$ N/B	$ N/B

LINE ITEM DETAIL

INMATE CLOTHING AND SUPPLIES

GALVESTON COUNTY, TEXAS

BID #: B122027
OPEN: 07/17/2012
2:00 PM

VENDOR ID 700956 CHARM-TEX

Item No.	Product Code	Description	Quantity	Units	Catalog #	Unit Price	Extended Price
		with no raw edges exposed Labels to be woven polyester 2 1/2" x 1 1/4" color coded by size Fabric to be 7 1/2 oz Twill, 65% Polyester combed cotton equal to Graniteville Mills 20/20 industrial laundry finish fabric Thread to be same color as the fabric All three (3) needle seams shall be cleanly finished and have no raw or frayed edges SAMPLE OF ONE SHIRT MUST BE SUBMITTED WITH BID Color to be orange Logo on back "TLC"					
0016	20085	V-NECK WORK SHIRTS - MEDIUM - MENS	8	EA		$ N/B	$ N/B
0017	20085	V-NECK WORK SHIRTS - LARGE - MENS	8	EA		$ N/B	$ N/B
0018	20085	V-NECK WORK SHIRTS X-LARGE - MENS	8	EA		$ N/B	$ N/B
0019	20085	V-NECK WORK SHIRTS - XXLARGE - MENS	4	EA		$ N/B	$ N/B
0020	20092	WORK PANTS - XSMALL - MENS Slip on elastic wasit with mock fly Elastic to be woven 1 1/2" heat resistant 26 gauge rubber, four rows	1735	EA		$ N/B	$ N/B

LINE ITEM DETAIL

INMATE CLOTHING AND SUPPLIES

GALVESTON COUNTY, TEXAS

BID #: B122027
OPEN: 07/17/2012
2:00 PM

VENDOR ID 700956 CHARM-TEX

Item No.	Product Code	Description	Quantity	Units	Catalog #	Unit Price	Extended Price
		of lock stitched to pants (chain stitching is not acceptable) Elastic to be guaranteed for life of the garment from losing its elasticity Labels to be woven polyester 2 1/2" x 1 1/4" color coded by size All seams three (3) needle felled Crotch mock fly to be sew serged, double needle lock stitched and bartacked Leg hems double folded and lock stitched All inseams to be 32" hemmed Fabric to be 7 1/2 oz Twill 65% Polyester, 35% combed cotton equal to Graniteville 20/20 twill industrial laundry finish Thread to be the same color as the fabric All three (3) needle seams shall be clearly finished and have no raw or frayed edges SAMPLE OF ONE PAIR OF PANTS MUST BE SUBMITTED WITH BID Colors to be gray, orange, khaki, and green					
0021	20092	WORK PANTS - SMALL MENS	1735	EA		$ N/B	$ N/B

LINE ITEM DETAIL

INMATE CLOTHING AND SUPPLIES

GALVESTON COUNTY, TEXAS

BID #: B122027
OPEN: 07/17/2012
2:00 PM

VENDOR ID 700956 CHARM-TEX

Item No	Product Code	Description	Quantity	Units	Catalog #	Unit Price	Extended Price
0022	20092	WORK PANTS - MEDIUM - MENS	1735	EA		$ N/B	$ N/B
0023	20092	WORK PANTS - LARGE - MENS	1735	EA		$ N/B	$
0024	20092	WORK PANTS - XLARGE - MENS	1735	EA		$ N/B	$
0025	20092	WORK PANTS - XXLARGE - MENS	1735	EA		$ N/B	$
0026	20092	WORK PANTS - XXXLARGE - MENS	1735	EA		$ N/B	$
0027	20092	WORK PANTS - 4XLARGE - MENS	1735	EA		$ N/B	$
0028	20092	WORK PANTS - 5XLARGE - MENS	1735	EA		$ N/B	$
0029	20092	WORK PANTS - 6XLARGE - MENS	175	EA		$ N/B	$
0030	20092	WORK PANTS - 7XLARGE - MENS	175	EA		$ N/B	$ N/B

LINE ITEM DETAIL

INMATE CLOTHING AND SUPPLIES

GALVESTON COUNTY, TEXAS

BID #. B122027
OPEN: 07/17/2012
2:00 PM

VENDOR ID 700956 CHARM-TEX

Item No	Product Code	Description	Quantity	Units	Catalog #	Unit Price	Extended Price
0031	20092	WORK PANTS - 8XLARGE - MENS	175	EA		$ N/B	$ N/B
0032	20092	WORK PANTS - 9XLARGE - MENS	175	EA		$ N/B	$ N/B
0033	20092	WORK PANTS - 10XLARGE - MENS	175	EA		$ N/B	$ N/B
0034	20092	JUMPSUIT WITH SNAP CLOSURE - SMALL Triple stitch seam construction Heavy duty thread Elasticized waistband Reinforcing bartacks, color coded size labels Bias and seams to be cleanly finished and have no raw edges or frayed edges Fabric to be 7 1/2 oz Twill, 65% Polyester, 35% combed cotton Colors are to be green and navy	4	EA		$ N/B	$ N/B
0035	20092	JUMPSUIT WITH SNAP CLOSURE - MEDIUM	8	EA		$ N/B	$ N/B
0036	20092	JUMPSUIT WITH SNAP CLOSURE - LARGE	12	EA		$ N/B	$ N/B

LINE ITEM DETAIL

INMATE CLOTHING AND SUPPLIES

GALVESTON COUNTY, TEXAS

BID #: B122027
OPEN: 07/17/2012
2:00 PM

VENDOR ID 700956 CHARM-TEX

Item No.	Product Code	Description	Quantity	Units	Catalog #	Unit Price	Extended Price
0037	20092	JUMPSUIT WITH SNAP CLOSURE - XLARGE	18	EA		$ N/B	$ N/B
0038	20092	JUMPSUIT WITH SNAP CLOSURE - XXLARGE	18	EA		$ N/B	$
0039	20092	JUMPSUIT WITH SNAP CLOSURE - XXXLARGE	12	EA		$ N/B	$
0040	20092	JUMPSUIT WITH SNAP CLOSURE - 4XLARGE	8	EA		$ N/B	$
0041	20092	JUMPSUIT WITH SNAP CLOSURE - 5XLARGE	4	EA		$ N/B	$
0042	20092	JUMPSUIT WITH SNAP CLOSURE - 6XLARGE	4	EA		$ N/B	$
0043	20092	JUMPSUIT WITH SNAP CLOSURE - 7XLARGE	4	EA		$ N/B	$
0044	20070	100% COTTON T-SHIRTS - MEDIUM - MENS	6	DZ		$ N/B	$
0045	20070	100% COTTON T-SHIRTS - LARGE - MENS	12	DZ		$ N/B	$ N/B

LINE ITEM DETAIL

INMATE CLOTHING AND SUPPLIES

GALVESTON COUNTY, TEXAS

BID #: B122027
OPEN: 07/17/2012
2:00 PM

VENDOR ID 700956 CHARM-TEX

Item No	Product Code	Description	Quantity	Units	Catalog #	Unit Price	Extended Price
0046	20070	100% COTTON T-SHIRTS - XLARGE - MENS	12	DZ		$ N/B	$ N/B
0047	20070	100% COTTON T-SHIRT - XXLARGE - MENS	4	DZ		$ N/B	$
0048	20070	100% COTTON T-SHIRTS - XXXLARGE - MENS	4	DZ		$ N/B	$
0049	20010	SWEATPANTS - SMALL COLOR TO BE NAVY	8	EA		$ N/B	$
0050	20010	SWEATPANTS - MEDIUM COLOR TO BE NAVY	12	EA		$ N/B	$
0051	20010	SWEATPANTS - LARGE COLOR TO BE NAVY	12	EA		$ N/B	$
0052	20010	SWEATPANTS - XLARGE COLOR TO BE NAVY	12	EA		$ N/B	$
0053	20010	SWEATPANTS - XXLARGE COLOR TO BE NAVY	8	EA		$ N/B	$ N/B

LINE ITEM DETAIL

INMATE CLOTHING AND SUPPLIES

GALVESTON COUNTY, TEXAS

BID #: B122027
OPEN: 07/17/2012
2:00 PM

VENDOR ID 700956 CHARM-TEX

Item No	Product Code	Description	Quantity	Units	Catalog #	Unit Price	Extended Price
0054	20010	SWEATPANTS - XXXLARGE COLOR TO BE NAVY	4	EA		$ N/B	$ N/B
0055	20010	CREW NECK SWEATSHIRT - MEDIUM COLOR TO BE GRAY	8	EA		$ N/B	$
0056	20010	CREW NECK SWEATSHIRT - LARGE COLOR TO BE GREY	12	EA		$ N/B	$
0057	20010	CREW NECK SWEATSHIRT - XLARGE COLOR TO BE GREY	12	EA		$ N/B	$
0058	20010	CREW NECK SWEATSHIRT - XXLARGE COLOR TO BE GREY	8	EA		$ N/B	$
0059	20010	CREW NECK SWEATSHIRT - XXXLARGE COLOR TO BE GREY	4	EA		$ N/B	$
0060	20010	CREW NECK SWEATSHIRT - MEDIUM ORANGE IN COLOR LOGO ON BACK "TLC"	10	EA		$ N/B	$ N/B

LINE ITEM DETAIL

INMATE CLOTHING AND SUPPLIES

GALVESTON COUNTY, TEXAS

BID #: B122027
OPEN: 07/17/2012
2:00 PM

VENDOR ID 700956 CHARM-TEX

Item No	Product Code	Description	Quantity	Units	Catalog #	Unit Price	Extended Price
0061	20010	CREW NECK SWEATSHIRT - LARGE ORANGE IN COLOR LOGO ON BACK "TLC"	10	EA		$ N/B	$ N/B
0062	20010	CREW NECK SWEATSHIRT - XLARGE ORANGE IN COLOR LOGO ON BACK "TLC"	5	EA		$ N/B	$
0063	20010	CREW NECK SWEATSHIRT - XXLARGE ORANGE IN COLOR LOGO ON BACK "TLC"	3	EA		$ N/B	$
0064	20010	JERSEY KNIT PRACTICE SHORTS - MEDIUM Triple sewn, soft cotton/poly blend jersey knit 6" inseam with covered elastic waistband No pockets or drawstrings Navy in color	24	EA		$ N/B	$
0065	20010	JERSEY KNIT PRACTICE SHORTS - LARGE	24	EA		$ N/B	$
0066	20010	JERSEY KNIT PRACTICE SHORTS - XLARGE	36	EA		$ N/B	$ N/B

LINE ITEM DETAIL

INMATE CLOTHING AND SUPPLIES

GALVESTON COUNTY, TEXAS

BID #: B122027
OPEN: 07/17/2012
2:00 PM

VENDOR ID 700956 CHARM-TEX

Item No.	Product Code	Description	Quantity	Units	Catalog #	Unit Price	Extended Price
0067	20010	JERSEY KNIT PRACTICE SHORTS - 2XLARGE	24	EA		$ N/B	$ N/B
0068	20010	JERSEY KNIT PRACTICE SHORTS - 3XLARGE	8	EA		$ N/B	$ N/B
0069	20151	MENS SOCKS SOLID CREWS ONE SIZE FITS ALL 80% COTTON, 20% SYNTHETIC WHITE IN COLOR	50	DZ	sck/crew	$ 5.90	$ 7.50
0070	20187	MENS BRIEFS POLYESTER/COTTON BLEND - MEDIUM - WHITE IN COLOR	12	DZ	CL/Briefs	$ 9.90	$ 118.80
0071	20187	MENS BRIEFS POLYESTER/COTTON BLEND LARGE - WHITE IN COLOR	18	DZ	CL/Briefs	$ 9.90	$ 178.20
0072	20187	MENS BRIEFS POLYESTER/COTTON BLEND XLARGE - WHITE IN COLOR	12	DZ	CL/Briefs	$ 9.90	$ 118.80
0073	20187	MENS BRIEFS POLYESTER/COTTON BLEND 2XLARGE - WHITE IN COLOR	8	DZ	CL/Briefs	$ 9.90	$ 79.20

LINE ITEM DETAIL

INMATE CLOTHING AND SUPPLIES

GALVESTON COUNTY, TEXAS

BID #: B122027
OPEN: 07/17/2012
2:00 PM

VENDOR ID 700956 CHARM-TEX

Item No	Product Code	Description	Quantity	Units	Catalog #	Unit Price	Extended Price
0074	20187	MENS BRIEFS POLYESTER/COTTON BLEND 3XLARGE - WHITE IN COLOR	4	DZ	CL/BRIEFS	$ 10.90	$ 43.60
0075	20186	WOMENS PANTIES KNITTED ELASTIC WAIST & LEG BANDS SIZE 6 - WHITE IN COLOR	4	DZ	CL/PANT	$ 7.90	$ 31.60
0076	20186	WOMENS PANTIES KNITTED WAIST & LEG BANDS SIZE 7 - WHITE IN COLOR	8	DZ	CL/PANT	$ 7.90	$ 63.20
0077	20186	WOMENS PANTIES KNITTED WAIST & LEG BANDS SIZE 8 - WHITE IN COLOR	8	DZ	CL/PANT	$ 7.90	$ 63.20
0078	20186	WOMENS PANTIES KNITTED WAIST & LEG BANDS SIZE 9 - WHITE IN COLOR	4	DZ	CL/PANT	$ 7.90	$ 31.60
0079	20186	WOMENS PANTIES KNITTED ELASTIC WAIST & LEG BAND SIZE 10 - WHITE IN COLOR	4	DZ	CL/PANT	$ 8.90	$ 35.60

LINE ITEM DETAIL

INMATE CLOTHING AND SUPPLIES

GALVESTON COUNTY, TEXAS

BID #: B122027
OPEN: 07/17/2012
2:00 PM

VENDOR ID 700956 CHARM-TEX

Item No.	Product Code	Description	Quantity	Units	Catalog #	Unit Price	Extended Price
0080	20186	SPORTS BRA - SMALL (32 A/B) Hookless pull-on style No metal or plastic Wide, non-slip straps, racer-style back White in color sold by dozen only	16	EA	CL/SB19	$ 21.90 /DZ	$ 21.90
0081	20186	SPORTS BRA - MEDIUM (34 A/B) sold by dozen only	48	EA	CL/SB19	$ 21.90 /DZ	$ 87.60
0082	20186	SPORTS BRA - LARGE (36 A/B) sold by dozen only	36	EA	CL/SB19	$ 21.90 /DZ	$ 65.70
0083	20186	SPORTS BRA - XLARGE (38 A/B) sold by dozen only	12	EA	CL/SB19	$ 21.90 /DZ	$ 21.90
0084	20186	SPORTS BRA XXLARGE (40-42 B,C&D) sold by dozen only	12	EA	CL/SB19	$ 21.90 /DZ.	$ 21.90
0085	80048	SLIP ON TENNIS SHOES - SIZE 5 Heavy weight navy blue canvas uppers White rubber around sole Insoles stitched in place USA made only We only sell imported size ONS!	1200	PR	F/PMSO-NV	$ 3.90	$ 4680
0086	80048	SLIP ON TENNIS SHOES - SIZE 6	1200	PR	F/PMSO-NV	$ 3.90	$ 4680

LINE ITEM DETAIL

INMATE CLOTHING AND SUPPLIES

GALVESTON COUNTY, TEXAS

BID #: B122027
OPEN: 07/17/2012
2:00 PM

VENDOR ID 700956 CHARM-TEX

Item No.	Product Code	Description	Quantity	Units	Catalog #	Unit Price	Extended Price
0087	80048	SLIP ON TENNIS SHOES - SIZE 7	1200	PR	F/PMSO NV	$ 3.90	$ 4680.-
0088	80048	SLIP ON TENNIS SHOES - SIZE 8	1200	PR	F/PMSO-NV	$ 3.90	$ 4680.-
0089	80048	SLIP ON TENNIS SHOES - SIZE 9	1200	PR	F/PMSO-NV	$ 3.90	$ 4680.-
0090	80048	SLIP ON TENNIS SHOES - SIZE 10	1200	PR	F/PMSO-NV	$ 3.90	$ 4680.-
0091	80048	SLIP ON TENNIS SHOES - SIZE 11	1200	PR	F/PMSO-NV	$ 3.90	$ 4680.-
0092	80048	SLIP ON TENNIS SHOES - SIZE 12	1200	PR	F/PMSO-NV	$ 3.90	$ 4680.-
0093	80048	SLIP ON TENNIS SHOES - SIZE 13	1200	PR	F/PMSO-NV	$ 3.90	$ 4680.-
0094	80048	SLIP ON TENNIS SHOES - SIZE 14	1200	PR	F/PMSO-NV	$ 3.90	$ 4680.-
0095	80048	SLIP ON TENNIS SHOES - SIZE 15	1200	PR	F/PMSO NV	$ 3.90	$ 4680.-

LINE ITEM DETAIL

INMATE CLOTHING AND SUPPLIES

GALVESTON COUNTY, TEXAS

BID #: B122027
OPEN: 07/17/2012
2:00 PM

VENDOR ID 700956 CHARM-TEX

Item No.	Product Code	Description	Quantity	Units	Catalog #	Unit Price	Extended Price
0096	80032	SLIP ON SANDALS SIZE SMALL Biochek Antimicrobial PVC Skid resistant sole to reduce risk of falls on wet floors Burgundy in color	1710	PR	F/ANTIPVC	$ 2.08	$ 3556.80
0097	80032	SLIP ON SANDALS SIZE MEDIUM	1710	PR	F/ANTIPVC	$ 2.08	$ 3556.80
0098	80032	SLIP ON SANDALS SIZE LARGE	1710	PR	F/ANTIPVC	$ 2.08	$ 3556.80
0099	80032	SLIP ON SANDALS SIZE XLARGE	1710	PR	F/ANTIPVC	$ 2.08	$ 3556.80
0100	80032	SLIP ON SANDALS SIZE XXLARGE	1710	PR	F/ANTIPVC	$ 2.08	$ 3556.80
0101	80032	SLIP ON SANDALS SIZE 3XLARGE	1710	PR	F/ANTIPVC	$ 2.08	$ 3556.80
0102	80032	SLIP ON SANDALS SIZE SIZE 5-6 (SMALL)	1710	PR	F/ANTIPVC	$ 2.08	$ 3556.80
0103	80032	SLIP ON SANDALS SIZE 7-8 (MEDIUM)	1710	PR	F/ANTIPVC	$ 2.08	$ 3556.80

LINE ITEM DETAIL

INMATE CLOTHING AND SUPPLIES

GALVESTON COUNTY, TEXAS

BID #: B122027
OPEN: 07/17/2012
2:00 PM

VENDOR ID 700956 CHARM-TEX

Item No.	Product Code	Description	Quantity	Units	Catalog #	Unit Price	Extended Price
0104	80032	SLIP ON SANDALS SIZE 9-10 (LARGE)	1710	PR	F/ANTIPVC	$ 2 08	$ 3556 50
0105	80032	SLIP ON SANDALS SIZE 11-12 (XLARGE)	1710	PR	F/ANTIPVC	$ 2 08	$ 3556.50
0106	80032	SLIP ON SANDALS SIZE 13-14 (XXLARGE)	1710	PR	F/ANTIPVC	$ 2 08	$ 3556 50
0107	95405	TOWELS HEAVY OR PREMIUM WEIGHT 100% COTTON MINIMUM 5 5 LBS PER DOZEN, WHITE IN COLOR IMPORTED OR DOMESTIC PRE-PACKAGED 25 DOZEN PER CASE 20" X 40" IN SIZE	600	DZ	[illegible]	$ 12.5Y	$ [illegible]
0108	85092	WASHCLOTHS HEAVY OR PREMIUM WEIGHT COTTON 12" X 12" WHITE BATH WASHCLOTH	100	DZ	[illegible]	$ 1.70	$ [illegible]
0109	61586	VINYL ID WASHABLE TAGS, 1000/ROLL	2	ROLL	N/B	$ N/B	$ N/B
0110	51080	NETS, TIE CORD LAUNDRY 24" X 36"	12	DZ	BAC-TC [illegible]	$ 25.10	$ 310 50
0111	20044	BDU TROUSERS - SMALL/REGULAR Military inspired construction, six (6) pockets, four (4) with button flaps Adjustable waist tab with four (4)	6	EA	N/B	$ N/B	$ N/B

LINE ITEM DETAIL

INMATE CLOTHING AND SUPPLIES

GALVESTON COUNTY, TEXAS

BID #: B122027
OPEN: 07/17/2012
2:00 PM

VENDOR ID 700956 CHARM-TEX

Item No	Product Code	Description	Quantity	Units	Catalog #	Unit Price	Extended Price
		bartacks Zipper fly with snap closure 65/35 Polyester/Cotton Ripstop Color to be Navy					
0112	20044	BDU TROUSER - MEDIUM/REGULAR Color to be Navy	15	EA		$ N/B	$ N/B
0113	20044	BDU TROUSER - LARGE/REGULAR Color to be Navy	15	EA		$ N/B	$ N/B
0114	20044	BDU TROUSER - XLARGE/REGULAR Color to be Navy	6	EA		$ N/B	$ N/B
0115	20044	BDU TROUSER - 2XLARGE/REGULAR Color to be Navy	4	EA		$ N/B	$ N/B

Extended Price Total of all Item $ 119,166 -

BID #: B122027
OPEN: 07/19/2012
2 00 PM

INMATE CLOTHNG AND SUPPLIES
GALVESTON COUNTY, TEXAS

COMPANY INFORMATION BID FORM

THE COMPANY OF ACME SUPPLY CO., LTD

Address 10 Cedar Swamp Rd, Ste 7
Glen Cove, NY 11542

FEIN (TAX ID) 11-3111598

The following shall be returned with your bid Failure to do so may be ample cause for rejection of bid as non responsive It is the responsibility of the Bidder to ensure that Bidder has received all addenda

Items	Confirmed (X)
1. References (if required)	____
2 Addenda, if any.	#1____ #2____ #3____ #4 __
3 One (1) original and four (4) copies of submittal	✓
4 Vendor Qualification packet	✓
5 Payment Terms:	✓ net 30 ____ Other

Person to contact regarding this bid Sandra Bailey

Title Administrator Phone (800)567-8025 Fax (800)567-8026

E-mail address BN@ACMESUPPLY.US

Name of person authorized to bind the Company ZAHEER SHEIK

Signature [signature] Date 7-12-12

Title PRESIDENT Phone (800)567-8025 Fax (800)567-8026

E-mail address BN@ACMESUPPLY.US

BID #. B122027
OPEN: 07/19/2012
2:00 PM

INMATE CLOTHNG AND SUPPLIES
GALVESTON COUNTY, TEXAS

SECTION TOTAL BID FORM

Having read and understood the instructions, terms, conditions, specifications, and invitation to bid we submit the following

SECTION	TOTAL AMOUNT
Section I – Bedding, line items 1 – 6	$5,572.00
Section II – Work shirts and Pants, line items 7- 43	
Section III – Recreational Clothing, line items 44 – 69	$250.00
Section IV – Undergarments, line items 70 – 84	$1,178.00
Section V – Footwear, line items 85 – 106	
Section VI – Towels and Linens, line items 107 – 108	$7,717.00
Section VII – Laundry Items and Accessories, line items 109 – 110	
Section VIII – BDU Trousers, line items 111 - 115	

LINE ITEM DETAIL

INMATE CLOTHING AND SUPPLIES

GALVESTON COUNTY, TEXAS

BID # B122027
OPEN 07/17/2012
2 00 PM

VENDOR ID

Item No	Product Code	Description	Quantity	Units	Catalog #	Unit Price	Extended Price
0001	85012	COTTON YEAR ROUND THERMAL BLANKET 100% cotton snag free closed weave blanket Preshrunk 6" selvaged sides and stitched ends to prevent dismantling Color to be white Weight approximately 2 5 lbs Size of 66 x 90 Thread count warp 48 ends per inch comprised of 10/1 and 20/2 yarn Thread count fill 30 per inch in 16/1 yarn	1000	EA	17473	$ 5.50	$ 5,500.00
0002	85012	BLANKETS, 100% FIBER WOVEN POLYESTER Using center scrim that binds fibers together Tightly woven, will not pill, shred or mat even after washing 66" x 90" Color to be blue or navy Flame resistant, hemmed on all four (4) sides, seamless construction Machine washable	48	EA		$	$
0003	85052	MATTRESS COVER - VINYL To be made of "Healthguard" anti-microbial vinyl material, made from heavy duty vinyl, fire retardant, tear resistant, antibacterial Seams for	450	EA		$	$

LINE ITEM DETAIL

INMATE CLOTHING AND SUPPLIES

GALVESTON COUNTY, TEXAS

BID # B122027
OPEN: 07/17/2012
2:00 PM

VENDOR ID

Item No	Product Code	Description	Quantity	Units	Catalog #	Unit Price	Extended Price
		double-needle, lock-stitch, sewn with heavy duty nylon for long lasting durability Mattress cover is first quality Mildew and stain resistant Made of two layers of vinyl (12 2 ounce per square yard) bonded to scrim cloth This type of cover can be cleaned with mild, soapy water and/or Sani-Cloth Wipes Cover to fit mattress size 30" x 72" x 4" Color should be green					
0004	85052	MATTRESS COVERS TWILL Slip on mattress cover Cover is a green color Twill 65% polyester, 35% combed cotton industrial finish fabric for maximum durability in institutional laundry Seams are single-needle lock-stitch with heavy duty polyester thread Covers to be sewn, overlocked, with no raw edges, exposed to fit mattress 30" x 72" x 4"	1000	EA	_____	$_____	$_____
0005	85063	PILLOWS FABRIC COVERED MICRO GUARD Size 20" x 26", white in color	40	EA	_____	$_____	$_____

LINE ITEM DETAIL

INMATE CLOTHING AND SUPPLIES

GALVESTON COUNTY, TEXAS

BID # B122027
OPEN. 07/17/2012
2.00 PM

VENDOR ID

Item No	Product Code	Description	Quantity	Units	Catalog #	Unit Price	Extended Price
0006	85064	CLOTH PILLOW CASES WHITE IN COLOR	8	DZ	29561	$ 9.00	$ 72.00
0007	20085	V-NECK WORK SHIRTS - SMALL V-neck slip-on reglan sleeve No buttons One pocket over left breast double needle lock stitched and bartacked All seams three (3) needle felled Sleeve and bottom hems double folded and lock stitched with bartacks at neck. Bias to be cleanly finished with no raw edges exposed Labels to be woven polyester 2 1/2" x 1 1/4" color coded by size Fabric to be 7 1/2 oz Twill, 65% Polyester combed cotton equal to Graniteville Mills 20/20 industrial laundry finish fabric Thread to be same color as the fabric All three (3) needle seams shall be cleanly finished and have no raw or frayed edges SAMPLE OF ONE SHIRT MUST BE SUBMITTED WITH BID Colors to be gray, navy, orange, khaki, and green Logo on back "GALVESTON COUNTY JAIL"	1625	EA		$	$

LINE ITEM DETAIL

INMATE CLOTHING AND SUPPLIES

GALVESTON COUNTY, TEXAS

BID # B122027
OPEN 07/17/2012
2 00 PM

VENDOR ID

Item No	Product Code	Description	Quantity	Units	Catalog #	Unit Price	Extended Price
0008	20085	V-NECK WORK SHIRTS - MEDIUM	1625	EA	_____	$_____	$_____
0009	20085	V-NECK WORK SHIRTS - LARGE	1625	EA	_____	$_____	$_____
0010	20085	V-NECK WORK SHIRTS - X-LARGE	1625	EA	_____	$_____	$_____
0011	20085	V-NECK WORK SHIRTS - XXLARGE	1625	EA	_____	$_____	$_____
0012	20085	V-NECK WORK SHIRTS - XXXLARGE	1625	EA	_____	$_____	$_____
0013	20085	V-NECK WORK SHIRTS 4X-LARGE	1625	EA	_____	$_____	$_____
0014	20085	V-NECK WORK SHIRTS - 5X-LARGE	1625	EA	_____	$_____	$_____
0015	20085	V-NECK WORK SHIRTS - SMALL MENS V-neck slip-on reglan sleeve No buttons One pocket over left breast double needle lock stitched and bartacked All seams three (3) needle felled Sleeve and bottom hems double folded and lock stitched with bartacks at neck Bias to be cleanly finished	4	EA	_____	$_____	$_____

LINE ITEM DETAIL

INMATE CLOTHING AND SUPPLIES

GALVESTON COUNTY, TEXAS

BID #: B122027
OPEN: 07/17/2012
2:00 PM

VENDOR ID

Item No	Product Code	Description	Quantity	Units	Catalog #	Unit Price	Extended Price
		with no raw edges exposed Labels to be woven polyester 2 1/2" x 1 1/4" color coded by size Fabric to be 7 1/2 oz Twill, 65% Polyester combed cotton equal to Graniteville Mills 20/20 industrial laundry finish fabric Thread to be same color as the fabric All three (3) needle seams shall be cleanly finished and have no raw or frayed edges SAMPLE OF ONE SHIRT MUST BE SUBMITTED WITH BID Color to be orange Logo on back "TLC"					
0016	20085	V-NECK WORK SHIRTS - MEDIUM - MENS	8	EA		$	$
0017	20085	V-NECK WORK SHIRTS - LARGE - MENS	8	EA		$	$
0018	20085	V-NECK WORK SHIRTS X-LARGE - MENS	8	EA		$	$
0019	20085	V-NECK WORK SHIRTS - XXLARGE - MENS	4	EA		$	$
0020	20092	WORK PANTS - XSMALL - MENS Slip on elastic waist with mock fly Elastic to be woven 1 1/2" heat resistant 26 gauge rubber, four rows	1735	EA		$	$

LINE ITEM DETAIL

INMATE CLOTHING AND SUPPLIES

GALVESTON COUNTY, TEXAS

BID # B122027
OPEN 07/17/2012
2.00 PM

VENDOR ID

Item No	Product Code	Description	Quantity	Units	Catalog #	Unit Price	Extended Price
		of lock stitched to pants (chain stitching is not acceptable) Elastic to be guaranteed for life of the garment from losing its elasticity Labels to be woven polyester 2 1/2" x 1 1/4" color coded by size All seams three (3) needle felled Crotch mock fly to be sew serged, double needle lock stitched and bartacked Leg hems double folded and lock stitched All inseams to be 32" hemmed Fabric to be 7 1/2 oz Twill 65% Polyester, 35% combed cotton equal to Graniteville 20/20 twill industrial laundry finish Thread to be the same color as the fabric All three (3) needle seams shall be clearly finished and have no raw or frayed edges SAMPLE OF ONE PAIR OF PANTS MUST BE SUBMITTED WITH BID Colors to be gray, orange, khaki, and green					
0021	20092	WORK PANTS - SMALL MENS	1735	EA	_____	$_____	$_____

LINE ITEM DETAIL

INMATE CLOTHING AND SUPPLIES

GALVESTON COUNTY, TEXAS

BID # B122027
OPEN 07/17/2012
2:00 PM

VENDOR ID

Item No	Product Code	Description	Quantity	Units	Catalog #	Unit Price	Extended Price
0022	20092	WORK PANTS - MEDIUM - MENS	1735	EA	_____	$_____	$_____
0023	20092	WORK PANTS - LARGE - MENS	1735	EA	_____	$_____	$_____
0024	20092	WORK PANTS - XLARGE - MENS	1735	EA	_____	$_____	$_____
0025	20092	WORK PANTS - XXLARGE - MENS	1735	EA	_____	$_____	$_____
0026	20092	WORK PANTS - XXXLARGE - MENS	1735	EA	_____	$_____	$_____
0027	20092	WORK PANTS - 4XLARGE - MENS	1735	EA	_____	$_____	$_____
0028	20092	WORK PANTS - 5XLARGE - MENS	1735	EA	_____	$_____	$_____
0029	20092	WORK PANTS - 6XLARGE - MENS	175	EA	_____	$_____	$_____
0030	20092	WORK PANTS - 7XLARGE - MENS	175	EA	_____	$_____	$_____

LINE ITEM DETAIL

INMATE CLOTHING AND SUPPLIES

GALVESTON COUNTY, TEXAS

BID #. B122027
OPEN: 07/17/2012
2:00 PM

VENDOR ID

Item No	Product Code	Description	Quantity	Units	Catalog #	Unit Price	Extended Price
0031	20092	WORK PANTS - 8XLARGE - MENS	175	EA	_____	$_____	$_____
0032	20092	WORK PANTS - 9XLARGE - MENS	175	EA	_____	$_____	$_____
0033	20092	WORK PANTS - 10XLARGE - MENS	175	EA	_____	$_____	$_____
0034	20092	JUMPSUIT WITH SNAP CLOSURE - SMALL Triple stitch seam construction Heavy duty thread Elasticized waistband Reinforcing bartacks, color coded size labels Bias and seams to be cleanly finished and have no raw edges or frayed edges Fabric to be 7 1/2 oz Twill, 65% Polyester, 35% combed cotton Colors are to be green and navy	4	EA	_____	$_____	$_____
0035	20092	JUMPSUIT WITH SNAP CLOSURE - MEDIUM	8	EA	_____	$_____	$_____
0036	20092	JUMPSUIT WITH SNAP CLOSURE - LARGE	12	EA	_____	$_____	$_____

LINE ITEM DETAIL

INMATE CLOTHING AND SUPPLIES

GALVESTON COUNTY, TEXAS

BID #: B122027
OPEN: 07/17/2012
2:00 PM

VENDOR ID

Item No	Product Code	Description	Quantity	Units	Catalog #	Unit Price	Extended Price
0037	20092	JUMPSUIT WITH SNAP CLOSURE - XLARGE	18	EA	_____	$_____	$_____
0038	20092	JUMPSUIT WITH SNAP CLOSURE - XXLARGE	18	EA	_____	$_____	$_____
0039	20092	JUMPSUIT WITH SNAP CLOSURE - XXXLARGE	12	EA	_____	$_____	$_____
0040	20092	JUMPSUIT WITH SNAP CLOSURE - 4XLARGE	8	EA	_____	$_____	$_____
0041	20092	JUMPSUIT WITH SNAP CLOSURE - 5XLARGE	4	EA	_____	$_____	$_____
0042	20092	JUMPSUIT WITH SNAP CLOSURE - 6XLARGE	4	EA	_____	$_____	$_____
0043	20092	JUMPSUIT WITH SNAP CLOSURE - 7XLARGE	4	EA	_____	$_____	$_____
0044	20070	100% COTTON T-SHIRTS - MEDIUM - MENS	6	DZ	_____	$_____	$_____
0045	20070	100% COTTON T-SHIRTS - LARGE - MENS	12	DZ	_____	$_____	$_____

LINE ITEM DETAIL

INMATE CLOTHING AND SUPPLIES

GALVESTON COUNTY, TEXAS

BID #: B122027
OPEN 07/17/2012
2.00 PM

VENDOR ID

Item No	Product Code	Description	Quantity	Units	Catalog #	Unit Price	Extended Price
0046	20070	100% COTTON T-SHIRTS - XLARGE - MENS	12	DZ	_____	$_____	$_____
0047	20070	100% COTTON T-SHIRT - XXLARGE - MENS	4	DZ	_____	$_____	$_____
0048	20070	100% COTTON T-SHIRTS - XXXLARGE - MENS	4	DZ	_____	$_____	$_____
0049	20010	SWEATPANTS - SMALL COLOR TO BE NAVY	8	EA	_____	$_____	$_____
0050	20010	SWEATPANTS - MEDIUM COLOR TO BE NAVY	12	EA	_____	$_____	$_____
0051	20010	SWEATPANTS - LARGE COLOR TO BE NAVY	12	EA	_____	$_____	$_____
0052	20010	SWEATPANTS - XLARGE COLOR TO BE NAVY	12	EA	_____	$_____	$_____
0053	20010	SWEATPANTS - XXLARGE COLOR TO BE NAVY	8	EA	_____	$_____	$_____

LINE ITEM DETAIL

INMATE CLOTHING AND SUPPLIES

GALVESTON COUNTY, TEXAS

BID #: B122027
OPEN: 07/17/2012
2:00 PM

VENDOR ID

Item No	Product Code	Description	Quantity	Units	Catalog #	Unit Price	Extended Price
0054	20010	SWEATPANTS - XXXLARGE COLOR TO BE NAVY	4	EA	_____	$_____	$_____
0055	20010	CREW NECK SWEATSHIRT - MEDIUM COLOR TO BE GRAY	8	EA	_____	$_____	$_____
0056	20010	CREW NECK SWEATSHIRT - LARGE COLOR TO BE GREY	12	EA	_____	$_____	$_____
0057	20010	CREW NECK SWEATSHIRT - XLARGE COLOR TO BE GREY	12	EA	_____	$_____	$_____
0058	20010	CREW NECK SWEATSHIRT - XXLARGE COLOR TO BE GREY	8	EA	_____	$_____	$_____
0059	20010	CREW NECK SWEATSHIRT - XXXLARGE COLOR TO BE GREY	4	EA	_____	$_____	$_____
0060	20010	CREW NECK SWEATSHIRT - MEDIUM ORANGE IN COLOR LOGO ON BACK "TLC"	10	EA	_____	$_____	$_____

LINE ITEM DETAIL

INMATE CLOTHING AND SUPPLIES

GALVESTON COUNTY, TEXAS

BID # B122027
OPEN 07/17/2012
2:00 PM

VENDOR ID

Item No	Product Code	Description	Quantity	Units	Catalog #	Unit Price	Extended Price
0061	20010	CREW NECK SWEATSHIRT - LARGE ORANGE IN COLOR LOGO ON BACK "TLC"	10	EA	_____	$_____	$_____
0062	20010	CREW NECK SWEATSHIRT - XLARGE ORANGE IN COLOR LOGO ON BACK "TLC"	5	EA	_____	$_____	$_____
0063	20010	CREW NECK SWEATSHIRT - XXLARGE ORANGE IN COLOR LOGO ON BACK "TLC"	3	EA	_____	$_____	$_____
0064	20010	JERSEY KNIT PRACTICE SHORTS - MEDIUM Triple sewn, soft cotton/poly blend jersey knit 6" inseam with covered elastic waistband No pockets or drawstrings Navy in color	24	EA	_____	$_____	$_____
0065	20010	JERSEY KNIT PRACTICE SHORTS - LARGE	24	EA	_____	$_____	$_____
0066	20010	JERSEY KNIT PRACTICE SHORTS - XLARGE	36	EA	_____	$_____	$_____

LINE ITEM DETAIL

INMATE CLOTHING AND SUPPLIES

GALVESTON COUNTY, TEXAS

BID # B122027
OPEN 07/17/2012
2:00 PM

VENDOR ID

Item No	Product Code	Description	Quantity	Units	Catalog #	Unit Price	Extended Price
0067	20010	JERSEY KNIT PRACTICE SHORTS - 2XLARGE	24	EA		$	$
0068	20010	JERSEY KNIT PRACTICE SHORTS - 3XLARGE	8	EA		$	$
0069	20151	MENS SOCKS SOLID CREWS ONE SIZE FITS ALL 80% COTTON, 20% SYNTHETIC WHITE IN COLOR	50	DZ	72301	$ 5.00	$ 250.00
0070	20187	MENS BRIEFS POLYESTER/COTTON BLEND - MEDIUM - WHITE IN COLOR	12	DZ	76672-M	$ 12.00	$ 144.00
0071	20187	MENS BRIEFS POLYESTER/COTTON BLEND LARGE - WHITE IN COLOR	18	DZ	76672-Lg	$ 12.00	$ 216.00
0072	20187	MENS BRIEFS POLYESTER/COTTON BLEND XLARGE - WHITE IN COLOR	12	DZ	76672-XL	$ 12.00	$ 144.00
0073	20187	MENS BRIEFS POLYESTER/COTTON BLEND 2XLARGE - WHITE IN COLOR	8	DZ	76672-XL	$ 12.00	$ 96.00

LINE ITEM DETAIL

INMATE CLOTHING AND SUPPLIES

GALVESTON COUNTY, TEXAS

BID #. B122027
OPEN 07/17/2012
2:00 PM

VENDOR ID

Item No	Product Code	Description	Quantity	Units	Catalog #	Unit Price	Extended Price
0074	20187	MENS BRIEFS POLYESTER/COTTON BLEND 3XLARGE - WHITE IN COLOR	4	DZ	76672-3XL	$ 12.00	$ 48.00
0075	20186	WOMENS PANTIES KNITTED ELASTIC WAIST & LEG BANDS SIZE 6 - WHITE IN COLOR	4	DZ	166PC	$ 10.00	$ 40.00
0076	20186	WOMENS PANTIES KNITTED WAIST & LEG BANDS SIZE 7 - WHITE IN COLOR	8	DZ	166PC	$ 10.00	$ 80.00
0077	20186	WOMENS PANTIES KNITTED WAIST & LEG BANDS SIZE 8 - WHITE IN COLOR	8	DZ	166PC	$ 10.00	$ 80.00
0078	20186	WOMENS PANTIES KNITTED WAIST & LEG BANDS SIZE 9 - WHITE IN COLOR	4	DZ	166PC	$ 10.00	$ 40.00
0079	20186	WOMENS PANTIES KNITTED ELASTIC WAIST & LEG BAND SIZE 10 - WHITE IN COLOR	4	DZ	166PC	$ 10.00	$ 40.00

LINE ITEM DETAIL

INMATE CLOTHING AND SUPPLIES

GALVESTON COUNTY, TEXAS

BID #. B122027
OPEN. 07/17/2012
2 00 PM

VENDOR ID

Item No	Product Code	Description	Quantity	Units	Catalog #	Unit Price	Extended Price
0080	20186	SPORTS BRA - SMALL (32 A/B) Hookless pull-on style No metal or plastic Wide, non-slip straps, racer-style back White in color	16	EA		$	$
0081	20186	SPORTS BRA - MEDIUM (34 A/B)	48	EA		$	$
0082	20186	SPORTS BRA - LARGE (36 A/B)	36	EA		$	$
0083	20186	SPORTS BRA - XLARGE (38 A/B)	12	EA		$	$
0084	20186	SPORTS BRA XXLARGE (40-42 B,C&D)	12	EA		$	$
0085	80048	SLIP ON TENNIS SHOES - SIZE 5 Heavy weight navy blue canvas uppers White rubber around sole Insoles stitched in place USA made only	1200	PR		$	$
0086	80048	SLIP ON TENNIS SHOES - SIZE 6	1200	PR		$	$

LINE ITEM DETAIL

INMATE CLOTHING AND SUPPLIES

GALVESTON COUNTY, TEXAS

BID # B122027
OPEN: 07/17/2012
2:00 PM

VENDOR ID

Item No	Product Code	Description	Quantity	Units	Catalog #	Unit Price	Extended Price
0087	80048	SLIP ON TENNIS SHOES - SIZE 7	1200	PR		$	$
0088	80048	SLIP ON TENNIS SHOES - SIZE 8	1200	PR		$	$
0089	80048	SLIP ON TENNIS SHOES - SIZE 9	1200	PR		$	$
0090	80048	SLIP ON TENNIS SHOES - SIZE 10	1200	PR		$	$
0091	80048	SLIP ON TENNIS SHOES - SIZE 11	1200	PR		$	$
0092	80048	SLIP ON TENNIS SHOES - SIZE 12	1200	PR		$	$
0093	80048	SLIP ON TENNIS SHOES - SIZE 13	1200	PR		$	$
0094	80048	SLIP ON TENNIS SHOES - SIZE 14	1200	PR		$	$
0095	80048	SLIP ON TENNIS SHOES - SIZE 15	1200	PR		$	$

LINE ITEM DETAIL

INMATE CLOTHING AND SUPPLIES

GALVESTON COUNTY, TEXAS

BID # B122027
OPEN 07/17/2012
2 00 PM

VENDOR ID

Item No	Product Code	Description	Quantity	Units	Catalog #	Unit Price	Extended Price
0096	80032	SLIP ON SANDALS SIZE SMALL Biochek Antimicrobial PVC Skid resistant sole to reduce risk of falls on wet floors Burgundy in color	1710	PR		$	$
0097	80032	SLIP ON SANDALS SIZE MEDIUM	1710	PR		$	$
0098	80032	SLIP ON SANDALS SIZE LARGE	1710	PR		$	$
0099	80032	SLIP ON SANDALS SIZE XLARGE	1710	PR		$	$
0100	80032	SLIP ON SANDALS SIZE XXLARGE	1710	PR		$	$
0101	80032	SLIP ON SANDALS SIZE 3XLARGE	1710	PR		$	$
0102	80032	SLIP ON SANDALS SIZE SIZE 5-6 (SMALL)	1710	PR		$	$
0103	80032	SLIP ON SANDALS SIZE 7-8 (MEDIUM)	1710	PR		$	$

LINE ITEM DETAIL

INMATE CLOTHING AND SUPPLIES

GALVESTON COUNTY, TEXAS

BID # B122027
OPEN: 07/17/2012
2.00 PM

VE.

Item No	Product Code	Description	Quantity	Units	Catalog #	Unit Price	Extended Price
0104	80032	SLIP ON SANDALS SIZE 9-10 (LARGE)	1710	PR		$	$
0105	80032	SLIP ON SANDALS SIZE 11-12 (XLARGE)	1710	PR		$	$
0106	80032	SLIP ON SANDALS SIZE 13-14 (XXLARGE)	1710	PR		$	$
0107	95405	TOWELS HEAVY OR PREMIUM WEIGHT 100% COTTON MINIMUM 5 5 LBS PER DOZEN, WHITE IN COLOR IMPORTED OR DOMESTIC PRE-PACKAGED 25 DOZEN PER CASE 20" X 40" IN SIZE	600	DZ	11550	$ 12.37	$ 7,422.00
0108	85092	WASHCLOTHS HEAVY OR PREMIUM WEIGHT COTTON 12" X 12" WHITE BATH WASHCLOTH	100	DZ	21216	$ 2.95	$ 295.00
0109	61586	VINYL ID WASHABLE TAGS, 1000/ROLL	2	ROLL		$	$
0110	51080	NETS, TIE CORD LAUNDRY 24" X 36"	12	DZ		$	$
0111	20044	BDU TROUSERS - SMALL/REGULAR Military inspired construction, six (6) pockets four (4) with button flaps Adjustable waist tab with four (4)	6	EA		$	$

LINE ITEM DETAIL

INMATE CLOTHING AND SUPPLIES

GALVESTON COUNTY, TEXAS

BID # B122027
OPEN 07/17/2012
2 00 PM

VENDOR ID

Item No	Product Code	Description	Quantity	Units	Catalog #	Unit Price	Extended Price
		bartacks Zipper fly with snap closure 65/35 Polyester/Cotton Ripstop Color to be Navy					
0112	20044	BDU TROUSER - MEDIUM/REGULAR Color to be Navy	15	EA	_____	$_____	$_____
0113	20044	BDU TROUSER - LARGE/REGULAR Color to be Navy	15	EA	_____	$_____	$_____
0114	20044	BDU TROUSER - XLARGE/REGULAR Color to be Navy	6	EA	_____	$_____	$_____
0115	20044	BDU TROUSER - 2XLARGE/REGULAR Color to be Navy	4	EA	_____	$_____	$_____
						Extended Price Total of all Iten	$_____

BID #· B122027
OPEN: 07/19/2012
2:00 PM

Cuff

INMATE CLOTHNG AND SUPPLIES
GALVESTON COUNTY, TEXAS

COMPANY INFORMATION BID FORM

THE COMPANY OF Carolina Textiles

Address PO Box 11211
Charlotte NC 28220

FEIN (TAX ID) 202814598

The following shall be returned with your bid Failure to do so may be ample cause for rejection of bid as non responsive It is the responsibility of the Bidder to ensure that Bidder has received all addenda

Items	Confirmed (X).
1 References (if required)	____
2 Addenda, if any.	#1____ #2____ #3____ #4 __
~~3.~~ One (1) original and four (4) copies of submittal	____
4 Vendor Qualification packet	____
5 Payment Terms.	✓ net 30 ____ Other

Person to contact regarding this bid Bob Jones

Title Owner Phone 704 525.2772 Fax 704 525060

E-mail address Carolina Textiles@NetTero.com

Name of person authorized to bind the Company Bob Jones

Signature Bob Jones Date 7/11/12

Title Owner Phone 704 525.2772 Fax 704 525060

E-mail address Carolina Textiles@NetTero.com

LINE ITEM DETAIL

INMATE CLOTHING AND SUPPLIES

GALVESTON COUNTY, TEXAS

BID # B122027
OPEN. 07/17/2012
2 00 PM

VENDOR ID

Item No.	Product Code	Description	Quantity	Units	Catalog #	Unit Price	Extended Price
0001	85012	COTTON YEAR ROUND THERMAL BLANKET 100% cotton snag free closed weave blanket Preshrunk 6" selvaged sides and stitched ends to prevent dismantling Color to be white Weight approximately 2 5 lbs Size of 66 x 90 Thread count warp 48 ends per inch comprised of 10/1 and 20/2 yarn Thread count fill 30 per inch in 16/1 yarn	1000	EA		$ 65 5	$ 65 50 00
0002	85012	BLANKETS, 100% FIBER WOVEN POLYESTER Using center scrim that binds fibers together Tightly woven, will not pill, shred or mat even after washing 66" x 90" Color to be blue or navy Flame resistant, hemmed on all four (4) sides, seamless construction Machine washable	48	EA		$ 7.09	$ 340 32
0003	85052	MATTRESS COVER - VINYL To be made of "Healthguard" anti-microbial vinyl material, made from heavy duty vinyl, fire retardant, tear resistant, antibacterial Seams for	450	EA		$ N/B	$

LINE ITEM DETAIL

INMATE CLOTHING AND SUPPLIES

GALVESTON COUNTY, TEXAS

BID # B122027
OPEN 07/17/2012
2:00 PM

VENDOR ID

Item No	Product Code	Description	Quantity	Units	Catalog #	Unit Price	Extended Price
		double-needle, lock-stitch, sewn with heavy duty nylon for long lasting durability Mattress cover is first quality Mildew and stain resistant Made of two layers of vinyl (12 2 ounce per square yard) bonded to scrim cloth This type of cover can be cleaned with mild, soapy water and/or Sani-Cloth Wipes Cover to fit mattress size 30" x 72" x 4" Color should be green					
0004	85052	MATTRESS COVERS TWILL Slip on mattress cover Cover is a green color Twill 65% polyester, 35% combed cotton industrial finish fabric for maximum durability in institutional laundry Seams are single-needle lock-stitch with heavy duty polyester thread Covers to be sewn, overlocked, with no raw edges, exposed to fit mattress 30" x 72" x 4"	1000	EA		$ N/B	$
0005	85063	PILLOWS FABRIC COVERED MICRO GUARD Sixe 20" x 26", white in color	40	EA		$ N/B	$

LINE ITEM DETAIL

INMATE CLOTHING AND SUPPLIES

GALVESTON COUNTY, TEXAS

BID # B122027
OPEN 07/17/2012
2:00 PM

VENDOR ID

Item No	Product Code	Description	Quantity	Units	Catalog #	Unit Price	Extended Price
0006	85064	CLOTH PILLOW CASES WHITE IN COLOR	8	DZ	_____	$_____	$_____
0007	20085	V-NECK WORK SHIRTS - SMALL V-neck slip-on reglan sleeve No buttons One pocket over left breast double needle lock stitched and bartacked All seams three (3) needle felled Sleeve and bottom hems double folded and lock stitched with bartacks at neck Bias to be cleanly finished with no raw edges exposed Labels to be woven polyester 2 1/2" x 1 1/4" color coded by size Fabric to be 7 1/2 oz Twill, 65% Polyester combed cotton equal to Graniteville Mills 20/20 industrial laundry finish fabric Thread to be same color as the fabric All three (3) needle seams shall be cleanly finished and have no raw or frayed edges SAMPLE OF ONE SHIRT MUST BE SUBMITTED WITH BID Colors to be gray, navy, orange, khaki, and green Logo on back "GALVESTON COUNTY JAIL"	1625	EA	_____	$ N/S	$_____

LINE ITEM DETAIL

INMATE CLOTHING AND SUPPLIES

GALVESTON COUNTY, TEXAS

BID #· B122027
OPEN 07/17/2012
2:00 PM

VENDOR ID

Item No	Product Code	Description	Quantity	Units	Catalog #	Unit Price	Extended Price
0008	20085	V-NECK WORK SHIRTS - MEDIUM	1625	EA		$ N/S	$
0009	20085	V-NECK WORK SHIRTS - LARGE	1625	EA		$	$
0010	20085	V-NECK WORK SHIRTS - X-LARGE	1625	EA		$	$
0011	20085	V-NECK WORK SHIRTS - XXLARGE	1625	EA		$	$
0012	20085	V-NECK WORK SHIRTS - XXXLARGE	1625	EA		$	$
0013	20085	V-NECK WORK SHIRTS 4X-LARGE	1625	EA		$	$
0014	20085	V-NECK WORK SHIRTS - 5X-LARGE	1625	EA		$	$
0015	20085	V-NECK WORK SHIRTS - SMALL MENS V-neck slip-on reglan sleeve No buttons One pocket over left breast double needle lock stitched and bartacked All seams three (3) needle felled Sleeve and bottom hems double folded and lock stitched with bartacks at neck Bias to be cleanly finished	4	EA		$ N/S	$

LINE ITEM DETAIL

INMATE CLOTHING AND SUPPLIES

GALVESTON COUNTY, TEXAS

BID #. B122027
OPEN. 07/17/2012
2 00 PM

VENDOR ID

Item No	Product Code	Description	Quantity	Units	Catalog #	Unit Price	Extended Price
		with no raw edges exposed Labels to be woven polyester 2 1/2" x 1 1/4" color coded by size Fabric to be 7 1/2 oz Twill, 65% Polyester combed cotton equal to Graniteville Mills 20/20 industrial laundry finish fabric Thread to be same color as the fabric All three (3) needle seams shall be cleanly finished and have no raw or frayed edges SAMPLE OF ONE SHIRT MUST BE SUBMITTED WITH BID Color to be orange Logo on back "TLC"					
0016	20085	V-NECK WORK SHIRTS - MEDIUM - MENS	8	EA		$	$
0017	20085	V-NECK WORK SHIRTS - LARGE - MENS	8	EA		$	$
0018	20085	V-NECK WORK SHIRTS X-LARGE - MENS	8	EA		$	$
0019	20085	V-NECK WORK SHIRTS - XXLARGE - MENS	4	EA		$	$
0020	20092	WORK PANTS - XSMALL - MENS Slip on elastic waist with mock fly Elastic to be woven 1 1/2" heat resistant 26 gauge rubber, four rows	1735	EA		$	$

LINE ITEM DETAIL

INMATE CLOTHING AND SUPPLIES

GALVESTON COUNTY, TEXAS

BID #. B122027
OPEN 07/17/2012
2.00 PM

VENDOR ID

Item No	Product Code	Description	Quantity	Units	Catalog #	Unit Price	Extended Price
		of lock stitched to pants (chain stitching is not acceptable) Elastic to be guaranteed for life of the garment from losing its elasticity Labels to be woven polyester 2 1/2" x 1 1/4" color coded by size All seams three (3) needle felled Crotch mock fly to be sew serged, double needle lock stitched and bartacked Leg hems double folded and lock stitched All inseams to be 32" hemmed Fabric to be 7 1/2 oz Twill 65% Polyester, 35% combed cotton equal to Graniteville 20/20 twill industrial laundry finish Thread to be the same color as the fabric All three (3) needle seams shall be clearly finished and have no raw or frayed edges SAMPLE OF ONE PAIR OF PANTS MUST BE SUBMITTED WITH BID Colors to be gray, orange, khaki, and green					
0021	20092	WORK PANTS - SMALL MENS	1735	EA	_____	$ _____	$ _____

LINE ITEM DETAIL

INMATE CLOTHING AND SUPPLIES

GALVESTON COUNTY, TEXAS

BID #: B122027
OPEN: 07/17/2012
2.00 PM

VENDOR ID

Item No	Product Code	Description	Quantity	Units	Catalog #	Unit Price	Extended Price
0022	20092	WORK PANTS - MEDIUM - MENS	1735	EA		$ N/B	$
0023	20092	WORK PANTS - LARGE - MENS	1735	EA		$	$
0024	20092	WORK PANTS - XLARGE - MENS	1735	EA		$	$
0025	20092	WORK PANTS - XXLARGE - MENS	1735	EA		$	$
0026	20092	WORK PANTS - XXXLARGE - MENS	1735	EA		$	$
0027	20092	WORK PANTS - 4XLARGE - MENS	1735	EA		$	$
0028	20092	WORK PANTS - 5XLARGE - MENS	1735	EA		$	$
0029	20092	WORK PANTS - 6XLARGE - MENS	175	EA		$	$
0030	20092	WORK PANTS - 7XLARGE - MENS	175	EA		$ N/B	$

LINE ITEM DETAIL

INMATE CLOTHING AND SUPPLIES

GALVESTON COUNTY, TEXAS

BID #. B122027
OPEN 07/17/2012
2 00 PM

VENDOR ID

Item No	Product Code	Description	Quantity	Units	Catalog #	Unit Price	Extended Price
0031	20092	WORK PANTS - 8XLARGE - MENS	175	EA		$ N/S	$
0032	20092	WORK PANTS - 9XLARGE - MENS	175	EA		$	$
0033	20092	WORK PANTS - 10XLARGE - MENS	175	EA		$	$
0034	20092	JUMPSUIT WITH SNAP CLOSURE - SMALL Triple stitch seam construction Heavy duty thread Elasticized waistband Reinforcing bartacks, color coded size labels Bias and seams to be cleanly finished and have no raw edges or frayed edges Fabric to be 7 1/2 oz Twill, 65% Polyester, 35% combed cotton Colors are to be green and navy	4	EA		$ N/S	$
0035	20092	JUMPSUIT WITH SNAP CLOSURE - MEDIUM	8	EA		$ N/S	$
0036	20092	JUMPSUIT WITH SNAP CLOSURE - LARGE	12	EA		$ N/S	$

LINE ITEM DETAIL

INMATE CLOTHING AND SUPPLIES

GALVESTON COUNTY, TEXAS

BID #: B122027
OPEN: 07/17/2012
2:00 PM

VENDOR ID

Item No.	Product Code	Description	Quantity	Units	Catalog #	Unit Price	Extended Price
0037	20092	JUMPSUIT WITH SNAP CLOSURE - XLARGE	18	EA		$ N/B	$
0038	20092	JUMPSUIT WITH SNAP CLOSURE - XXLARGE	18	EA		$	$
0039	20092	JUMPSUIT WITH SNAP CLOSURE - XXXLARGE	12	EA		$	$
0040	20092	JUMPSUIT WITH SNAP CLOSURE - 4XLARGE	8	EA		$	$
0041	20092	JUMPSUIT WITH SNAP CLOSURE - 5XLARGE	4	EA		$	$
0042	20092	JUMPSUIT WITH SNAP CLOSURE - 6XLARGE	4	EA		$	$
0043	20092	JUMPSUIT WITH SNAP CLOSURE - 7XLARGE	4	EA		$ N/B	$
0044	20070	100% COTTON T-SHIRTS - MEDIUM - MENS	6	DZ		$ 18.61	$ 111.66
0045	20070	100% COTTON T-SHIRTS - LARGE - MENS	12	DZ		$ 18.61	$ 223.32

LINE ITEM DETAIL

INMATE CLOTHING AND SUPPLIES

GALVESTON COUNTY, TEXAS

BID #. B122027
OPEN 07/17/2012
2:00 PM

VENDOR ID

Item No	Product Code	Description	Quantity	Units	Catalog #	Unit Price	Extended Price
0046	20070	100% COTTON T-SHIRTS - XLARGE - MENS	12	DZ		$ 18.61	$ [illegible]
0047	20070	100% COTTON T-SHIRT - XXLARGE - MENS	4	DZ		$ 28.66	$ 114.68
0048	20070	100% COTTON T-SHIRTS - XXXLARGE - MENS	4	DZ		$ 29.78	$ 119.12
0049	20010	SWEATPANTS - SMALL COLOR TO BE NAVY	8	EA		$ 6.89	$ 55.12
0050	20010	SWEATPANTS - MEDIUM COLOR TO BE NAVY	12	EA		$ 6.89	$ 82.68
0051	20010	SWEATPANTS - LARGE COLOR TO BE NAVY	12	EA		$ 6.89	$ 82.68
0052	20010	SWEATPANTS - XLARGE COLOR TO BE NAVY	12	EA		$ 6.89	$ 82.68
0053	20010	SWEATPANTS - XXLARGE COLOR TO BE NAVY	8	EA		$ 7.19	$ 57.52

LINE ITEM DETAIL

INMATE CLOTHING AND SUPPLIES

GALVESTON COUNTY, TEXAS

BID #: B122027
OPEN: 07/17/2012
2:00 PM

VENDOR ID

Item No	Product Code	Description	Quantity	Units	Catalog #	Unit Price	Extended Price
0054	20010	SWEATPANTS - XXXLARGE COLOR TO BE NAVY	4	EA		$ 7.44	$ 29.76
0055	20010	CREW NECK SWEATSHIRT - MEDIUM COLOR TO BE GRAY	8	EA		$ 5.52	$ 44.16
0056	20010	CREW NECK SWEATSHIRT - LARGE COLOR TO BE GREY	12	EA		$ 5.52	$ 66.24
0057	20010	CREW NECK SWEATSHIRT - XLARGE COLOR TO BE GREY	12	EA		$ 5.52	$ 66.24
0058	20010	CREW NECK SWEATSHIRT - XXLARGE COLOR TO BE GREY	8	EA		$ 6.10	$ 48.80
0059	20010	CREW NECK SWEATSHIRT - XXXLARGE COLOR TO BE GREY	4	EA		$ 6.10	$ 24.40
0060	20010	CREW NECK SWEATSHIRT - MEDIUM ORANGE IN COLOR LOGO ON BACK "TLC"	10	EA		$ N/A	$

LINE ITEM DETAIL

INMATE CLOTHING AND SUPPLIES

GALVESTON COUNTY, TEXAS

BID #. B122027
OPEN. 07/17/2012
2 00 PM

VENDOR ID

Item No	Product Code	Description	Quantity	Units	Catalog #	Unit Price	Extended Price
0061	20010	CREW NECK SWEATSHIRT - LARGE ORANGE IN COLOR LOGO ON BACK "TLC"	10	EA		$ N/B	$
0062	20010	CREW NECK SWEATSHIRT - XLARGE ORANGE IN COLOR LOGO ON BACK "TLC"	5	EA		$	$
0063	20010	CREW NECK SWEATSHIRT - XXLARGE ORANGE IN COLOR LOGO ON BACK "TLC"	3	EA		$	$
0064	20010	JERSEY KNIT PRACTICE SHORTS - MEDIUM Triple sewn, soft cotton/poly blend jersey knit 6" inseam with covered elastic waistband No pockets or drawstrings Navy in color	24	EA		$	$
0065	20010	JERSEY KNIT PRACTICE SHORTS - LARGE	24	EA		$ N/B	$
0066	20010	JERSEY KNIT PRACTICE SHORTS - XLARGE	36	EA		$	$

LINE ITEM DETAIL

INMATE CLOTHING AND SUPPLIES

GALVESTON COUNTY, TEXAS

BID #. B122027
OPEN 07/17/2012
2:00 PM

VENDOR ID

Item No	Product Code	Description	Quantity	Units	Catalog #	Unit Price	Extended Price
0067	20010	JERSEY KNIT PRACTICE SHORTS - 2XLARGE	24	EA		$ N/B	$
0068	20010	JERSEY KNIT PRACTICE SHORTS - 3XLARGE	8	EA		$ N/B	$
0069	20151	MENS SOCKS SOLID CREWS ONE SIZE FITS ALL 80% COTTON, 20% SYNTHETIC WHITE IN COLOR	50	DZ		$ 5.11	$ 255.50
0070	20187	MENS BRIEFS POLYESTER/COTTON BLEND - MEDIUM - WHITE IN COLOR	12	DZ		$ 9.72	$ 116.64
0071	20187	MENS BRIEFS POLYESTER/COTTON BLEND LARGE - WHITE IN COLOR	18	DZ		$ 9.72	$ 174.96
0072	20187	MENS BRIEFS POLYESTER/COTTON BLEND XLARGE - WHITE IN COLOR	12	DZ		$ 9.72	$ 116.64
0073	20187	MENS BRIEFS POLYESTER/COTTON BLEND 2XLARGE - WHITE IN COLOR	8	DZ		$ 10.83	$ 86.64

LINE ITEM DETAIL

INMATE CLOTHING AND SUPPLIES

GALVESTON COUNTY, TEXAS

BID #. B122027
OPEN 07/17/2012
2 00 PM

VENDOR ID

Item No.	Product Code	Description	Quantity	Units	Catalog #	Unit Price	Extended Price
0074	20187	MENS BRIEFS POLYESTER/COTTON BLEND 3XLARGE - WHITE IN COLOR	4	DZ		$ 1194	$ 48 76
0075	20186	WOMENS PANTIES KNITTED ELASTIC WAIST & LEG BANDS SIZE 6 - WHITE IN COLOR	4	DZ		$ 900	$ 36 00
0076	20186	WOMENS PANTIES KNITTED WAIST & LEG BANDS SIZE 7 - WHITE IN COLOR	8	DZ		$ 900	$ 72 00
0077	20186	WOMENS PANTIES KNITTED WAIST & LEG BANDS SIZE 8 - WHITE IN COLOR	8	DZ		$ 900	$ 72 00
0078	20186	WOMENS PANTIES KNITTED WAIST & LEG BANDS SIZE 9 - WHITE IN COLOR	4	DZ		$ 1008	$ 40 32
0079	20186	WOMENS PANTIES KNITTED ELASTIC WAIST & LEG BAND SIZE 10 - WHITE IN COLOR	4	DZ		$ 1008	$ 40 32

LINE ITEM DETAIL

INMATE CLOTHING AND SUPPLIES

GALVESTON COUNTY, TEXAS

BID #: B122027
OPEN 07/17/2012
2 00 PM

VENDOR ID

Item No	Product Code	Description	Quantity	Units	Catalog #	Unit Price	Extended Price
0080	20186	SPORTS BRA - SMALL (32 A/B) Hookless pull-on style No metal or plastic Wide, non-slip straps, racer-style back White in color	16	EA		$ 195	$ 3058
0081	20186	SPORTS BRA - MEDIUM (34 A/B)	48	EA		$ 195	$ 9264
0082	20186	SPORTS BRA - LARGE (36 A/B)	36	EA		$ 193	$ 6948
0083	20186	SPORTS BRA - XLARGE (38 A/B)	12	EA		$ 193	$ 2316
0084	20186	SPORTS BRA XXLARGE (40-42 B,C&D)	12	EA		$ 403	$ 4836
0085	80048	SLIP ON TENNIS SHOES - SIZE 5 Heavy weight navy blue canvas uppers White rubber around sole Insoles stitched in place USA made only	1200	PR		$ N/S	$
0086	80048	SLIP ON TENNIS SHOES - SIZE 6	1200	PR		$ N/S	$

LINE ITEM DETAIL

INMATE CLOTHING AND SUPPLIES

GALVESTON COUNTY, TEXAS

BID #. B122027
OPEN. 07/17/2012
2·00 PM

VENDOR ID

Item No.	Product Code	Description	Quantity	Units	Catalog #	Unit Price	Extended Price
0087	80048	SLIP ON TENNIS SHOES - SIZE 7	1200	PR		$ N/A	$
0088	80048	SLIP ON TENNIS SHOES - SIZE 8	1200	PR		$	$
0089	80048	SLIP ON TENNIS SHOES - SIZE 9	1200	PR		$	$
0090	80048	SLIP ON TENNIS SHOES - SIZE 10	1200	PR		$	$
0091	80048	SLIP ON TENNIS SHOES - SIZE 11	1200	PR		$	$
0092	80048	SLIP ON TENNIS SHOES - SIZE 12	1200	PR		$	$
0093	80048	SLIP ON TENNIS SHOES - SIZE 13	1200	PR		$	$
0094	80048	SLIP ON TENNIS SHOES - SIZE 14	1200	PR		$	$
0095	80048	SLIP ON TENNIS SHOES - SIZE 15	1200	PR		$ N/A	$

LINE ITEM DETAIL

INMATE CLOTHING AND SUPPLIES

GALVESTON COUNTY, TEXAS

BID #: B122027
OPEN 07/17/2012
2:00 PM

VENDOR ID

Item No	Product Code	Description	Quantity	Units	Catalog #	Unit Price	Extended Price
0096	80032	SLIP ON SANDALS SIZE SMALL Biochek Antimicrobial PVC Skid resistant sole to reduce risk of falls on wet floors Burgundy in color	1710	PR		$ N/B	$
0097	80032	SLIP ON SANDALS SIZE MEDIUM	1710	PR		$ N/A	$
0098	80032	SLIP ON SANDALS SIZE LARGE	1710	PR		$	$
0099	80032	SLIP ON SANDALS SIZE XLARGE	1710	PR		$	$
0100	80032	SLIP ON SANDALS SIZE XXLARGE	1710	PR		$	$
0101	80032	SLIP ON SANDALS SIZE 3XLARGE	1710	PR		$	$
0102	80032	SLIP ON SANDALS SIZE SIZE 5-6 (SMALL)	1710	PR		$	$
0103	80032	SLIP ON SANDALS SIZE 7-8 (MEDIUM)	1710	PR		$ N/A	$

LINE ITEM DETAIL

INMATE CLOTHING AND SUPPLIES

GALVESTON COUNTY, TEXAS

BID # B122027
OPEN. 07/17/2012
2.00 PM

VENDOR ID

Item No	Product Code	Description	Quantity	Units	Catalog #	Unit Price	Extended Price
0104	80032	SLIP ON SANDALS SIZE 9-10 (LARGE)	1710	PR		$ N/B	$
0105	80032	SLIP ON SANDALS SIZE 11-12 (XLARGE)	1710	PR		$	$
0106	80032	SLIP ON SANDALS SIZE 13-14 (XXLARGE)	1710	PR		$ N/B	$
0107	95405	TOWELS HEAVY OR PREMIUM WEIGHT 100% COTTON MINIMUM 5 5 LBS PER DOZEN, WHITE IN COLOR IMPORTED OR DOMESTIC PRE-PACKAGED 25 DOZEN PER CASE 20" X 40" IN SIZE	600	DZ		$ 13.61	$ 8,166.00
0108	85092	WASHCLOTHS HEAVY OR PREMIUM WEIGHT COTTON 12" X 12" WHITE BATH WASHCLOTH 100 Dor. Bale Pack	100	DZ		$ 3.06	$ 306.00
0109	61586	VINYL ID WASHABLE TAGS, 1000/ROLL	2	ROLL		$ N/B	$
0110	51080	NETS, TIE CORD LAUNDRY 24" X 36"	12	DZ		$ 22.48	$ 269.76
0111	20044	BDU TROUSERS - SMALL/REGULAR Military inspired construction, six (6) pockets, four (4) with button flaps Adjustable waist tab with four (4)	6	EA		$ N/B	$

LINE ITEM DETAIL

INMATE CLOTHING AND SUPPLIES

GALVESTON COUNTY, TEXAS

BID #: B122027
OPEN. 07/17/2012
2:00 PM

VENDOR ID

Item No.	Product Code	Description	Quantity	Units	Catalog #	Unit Price	Extended Price
		bartacks Zipper fly with snap closure 65/35 Polyester/Cotton Ripstop Color to be Navy					
0112	20044	BDU TROUSER - MEDIUM/REGULAR Color to be Navy	15	EA		$	$
0113	20044	BDU TROUSER - LARGE/REGULAR Color to be Navy	15	EA		$	$
0114	20044	BDU TROUSER - XLARGE/REGULAR Color to be Navy	6	EA		$	$
0115	20044	BDU TROUSER - 2XLARGE/REGULAR Color to be Navy	4	EA		$	$

Extended Price Total of all Iten $

Tabb Textile Co , Inc.
511 Pleasant Drive
P O Box 2707
Opelika, AL 36801

BID #: B122027
OPEN: 07/19/2012
2:00 PM

INMATE CLOTHNG AND SUPPLIES
GALVESTON COUNTY, TEXAS

COMPANY INFORMATION BID FORM

THE COMPANY OF Tabb Textiles Co; Inc.

Address 511 Pleasant Drive
Opelika, AL 36801

FEIN (TAX ID) 06-1169698

The following shall be returned with your bid Failure to do so may be ample cause for rejection of bid as non responsive It is the responsibility of the Bidder to ensure that Bidder has received all addenda

Items:	Confirmed (X):
1 References (if required)	X
2. Addenda, if any.	#1 X #2___ #3___ #4___
3 One (1) original and four (4) copies of submittal	X
4. Vendor Qualification packet	X
5. Payment Terms:	X net 30 ___Other

Person to contact regarding this bid Marsha Thrift

Title Contract Administrator Phone 334 745-6762 Fax 334-745-2377

E-mail address tabb@textilegroup.net

Name of person authorized to bind the Company Alan Fenster

Signature _____ Date _____

Title President Phone 334 745-6762 Fax 334 745-2377

E-mail address tabb@textilegroup.net

Tabb Textile Co , Inc
511 Pleasant Drive
P O Box 2707
Opelika, AL 36801

BID #: B122027
OPEN: 07/19/2012
2:00 PM

INMATE CLOTHNG AND SUPPLIES
GALVESTON COUNTY, TEXAS

SECTION TOTAL BID FORM

Having read and understood the instructions, terms, conditions, specifications, and invitation to bid we submit the following

SECTION	TOTAL AMOUNT
Section I – Bedding, line items 1 – 6	No Bid
Section II – Work shirts and Pants, line items 7- 43	No Bid
Section III – Recreational Clothing, line items 44 – 69	No Bid
Section IV – Undergarments, line items 70 – 84	No Bid
Section V – Footwear, line items 85 – 106	No Bid
Section VI – Towels and Linens, line items 107 – 108	7,200.00
Section VII – Laundry Items and Accessories, line items 109 – 110	No Bid
Section VIII – BDU Trousers, line items 111 - 115	No Bid

LINE ITEM DETAIL

INMATE CLOTHING AND SUPPLIES

GALVESTON COUNTY, TEXAS

Tabb Textile Co , Inc.
511 Pleasant Drive
P O Box 2707
Opelika, AL 36801

BID # B122027
OPEN 07/17/2012
2·00 PM

VENDOR ID

Item No.	Product Code	Description	Quantity	Units	Catalog #	Unit Price	Extended Price
0001	85012	COTTON YEAR ROUND THERMAL BLANKET 100% cotton snag free closed weave blanket Preshrunk 6" selvaged sides and stitched ends to prevent dismantling Color to be white Weight approximately 2 5 lbs Size of 66 x 90 Thread count warp 48 ends per inch comprised of 10/1 and 20/2 yarn Thread count fill 30 per inch in 16/1 yarn.	1000	EA		$	$ No Bid
0002	85012	BLANKETS, 100% FIBER WOVEN POLYESTER Using center scrim that binds fibers together Tightly woven, will not pill, shred or mat even after washing 66" x 90" Color to be blue or navy Flame resistant, hemmed on all four (4) sides, seamless construction Machine washable	48	EA		$	$ No Bid
0003	85052	MATTRESS COVER - VINYL To be made of "Healthguard" anti-microbial vinyl material, made from heavy duty vinyl, fire retardant, tear resistant, antibacterial Seams for	450	EA		$	$ No Bid

LINE ITEM DETAIL

INMATE CLOTHING AND SUPPLIES

GALVESTON COUNTY, TEXAS

Tabb Textile Co , Inc.
511 Pleasant Drive
P O Box 2707
Opelika, AL 36801

BID #. B122027
OPEN 07/17/2012
2 00 PM

VENDOR ID

Item No	Product Code	Description	Quantity	Units	Catalog #	Unit Price	Extended Price
		double-needle, lock-stitch, sewn with heavy duty nylon for long lasting durability Mattress cover is first quality Mildew and stain resistant Made of two layers of vinyl (12 2 ounce per square yard) bonded to scrim cloth This type of cover can be cleaned with mild, soapy water and/or Sani-Cloth Wipes Cover to fit mattress size 30" x 72" x 4" Color should be green					
0004	85052	MATTRESS COVERS TWILL Slip on mattress cover Cover is a green color Twill 65% polyester, 35% combed cotton industrial finish fabric for maximum durability in institutional laundry Seams are single-needle lock-stitch with heavy duty polyester thread Covers to be sewn, overlocked, with no raw edges, exposed to fit mattress 30" x 72" x 4"	1000	EA	_____	$_____	$_____
0005	85063	*PILLOWS FABRIC COVERED MICRO GUARD* Sixe 20" x 26", white in color	40	EA	_____	$_____	$_____

No Bid

LINE ITEM DETAIL

INMATE CLOTHING AND SUPPLIES

GALVESTON COUNTY, TEXAS

Tabb Textile Co , Inc.
511 Pleasant Drive
P O Box 2707
Opelika, AL 36801

BID # B122027
OPEN. 07/17/2012
2:00 PM

VENDOR ID

Item No	Product Code	Description	Quantity	Units	Catalog #	Unit Price	Extended Price
0006	85064	CLOTH PILLOW CASES WHITE IN COLOR	8	DZ	_____	$_____	$_____
0007	20085	V-NECK WORK SHIRTS - SMALL V-neck slip-on reglan sleeve No buttons One pocket over left breast double needle lock stitched and bartacked All seams three (3) needle felled Sleeve and bottom hems double folded and lock stitched with bartacks at neck. Bias to be cleanly finished with no raw edges exposed Labels to be woven polyester 2 1/2" x 1 1/4" color coded by size Fabric to be 7 1/2 oz Twill, 65% Polyester combed cotton equal to Graniteville Mills 20/20 industrial laundry finish fabric Thread to be same color as the fabric All three (3) needle seams shall be cleanly finished and have no raw or frayed edges SAMPLE OF ONE SHIRT MUST BE SUBMITTED WITH BID Colors to be gray, navy, orange, khaki, and green Logo on back "GALVESTON COUNTY JAIL"	1625	EA	_____	$_____	$_____

No Bid

Tabb Textile Co , Inc
511 Pleasant Drive
P O Box 2707
Opelika, AL 36801

BID #: B122027
OPEN 07/17/2012
2·00 PM

LINE ITEM DETAIL

INMATE CLOTHING AND SUPPLIES

GALVESTON COUNTY, TEXAS

VENDOR ID

Item No	Product Code	Description	Quantity	Units	Catalog #	Unit Price	Extended Price
0008	20085	V-NECK WORK SHIRTS - MEDIUM	1625	EA		$	$
0009	20085	V-NECK WORK SHIRTS - LARGE	1625	EA		$	$
0010	20085	V-NECK WORK SHIRTS - X-LARGE	1625	EA		$	$
0011	20085	V-NECK WORK SHIRTS - XXLARGE	1625	EA		$	$
0012	20085	V-NECK WORK SHIRTS - XXXLARGE	1625	EA		$	$
0013	20085	V-NECK WORK SHIRTS 4X-LARGE	1625	EA		$	$
0014	20085	V-NECK WORK SHIRTS - 5X-LARGE	1625	EA		$	$
0015	20085	V-NECK WORK SHIRTS - SMALL MENS V-neck slip-on reglan sleeve No buttons One pocket over left breast double needle lock stitched and bartacked All seams three (3) needle felled Sleeve and bottom hems double folded and lock stitched with bartacks at neck Bias to be cleanly finished	4	EA		$	$

Tabb Textile Co , Inc
511 Pleasant Drive
P O Box 2707
Opelika, AL 36801

LINE ITEM DETAIL

INMATE CLOTHING AND SUPPLIES

GALVESTON COUNTY, TEXAS

BID #· B122027
OPEN: 07/17/2012
2:00 PM

VENDOR ID

Item No	Product Code	Description	Quantity	Units	Catalog #	Unit Price	Extended Price
		with no raw edges exposed, Labels to be woven polyester 2 1/2" x 1 1/4" color coded by size Fabric to be 7 1/2 oz Twill, 65% Polyester combed cotton equal to Graniteville Mills 20/20 industrial laundry finish fabric Thread to be same color as the fabric All three (3) needle seams shall be cleanly finished and have no raw or frayed edges SAMPLE OF ONE SHIRT MUST BE SUBMITTED WITH BID Color to be orange Logo on back "TLC"					
0016	20085	V-NECK WORK SHIRTS - MEDIUM - MENS	8	EA		$	$
0017	20085	V-NECK WORK SHIRTS - LARGE - MENS	8	EA		$	$
0018	20085	V-NECK WORK SHIRTS X-LARGE - MENS	8	EA		$	$
0019	20085	V-NECK WORK SHIRTS - XXLARGE - MENS	4	EA		$	$
0020	20092	WORK PANTS - XSMALL - MENS Slip on elastic waist with mock fly Elastic to be woven 1 1/2" heat resistant 26 gauge rubber, four rows	1735	EA		$	$

Voided

Tabb Textile Co , Inc.
511 Pleasant Drive
P O Box 2707
Opelika, AL 36801

LINE ITEM DETAIL

INMATE CLOTHING AND SUPPLIES

GALVESTON COUNTY, TEXAS

BID #. B122027
OPEN. 07/17/2012
2.00 PM

VENDOR ID

Item No	Product Code	Description	Quantity	Units	Catalog #	Unit Price	Extended Price
		of lock stitched to pants (chain stitching is not acceptable) Elastic to be guaranteed for life of the garment from losing its elasticity Labels to be woven polyester 2 1/2" x 1 1/4" color coded by size All seams three (3) needle felled. Crotch mock fly to be sew serged, double needle lock stitched and bartacked. Leg hems double folded and lock stitched All inseams to be 32" hemmed Fabric to be 7 1/2 oz Twill 65% Polyester, 35% combed cotton equal to Graniteville 20/20 twill industrial laundry finish Thread to be the same color as the fabric All three (3) needle seams shall be clearly finished and have no raw or frayed edges. SAMPLE OF ONE PAIR OF PANTS MUST BE SUBMITTED WITH BID Colors to be gray, orange, khaki, and green					
0021	20092	WORK PANTS - SMALL MENS	1735	EA	_____	$_____	$_____

No Bid

Tabb Textile Co , Inc
511 Pleasant Drive
P O Box 2707
Opelika, AL 36801

BID #. B122027
OPEN: 07/17/2012
2:00 PM

LINE ITEM DETAIL

INMATE CLOTHING AND SUPPLIES

GALVESTON COUNTY, TEXAS

VENDOR ID

Item No.	Product Code	Description	Quantity	Units	Catalog #	Unit Price	Extended Price
0022	20092	WORK PANTS - MEDIUM - MENS	1735	EA		$	$
0023	20092	WORK PANTS - LARGE - MENS	1735	EA		$	$
0024	20092	WORK PANTS - XLARGE - MENS	1735	EA		$	$
0025	20092	WORK PANTS - XXLARGE - MENS	1735	EA		$	$
0026	20092	WORK PANTS - XXXLARGE - MENS	1735	EA		$	$
0027	20092	WORK PANTS - 4XLARGE - MENS	1735	EA		$	$
0028	20092	WORK PANTS - 5XLARGE - MENS	1735	EA		$	$
0029	20092	WORK PANTS - 6XLARGE - MENS	175	EA		$	$
0030	20092	WORK PANTS - 7XLARGE - MENS	175	EA		$	$

Fabb Textile Co , Inc
511 Pleasant Drive
P O Box 2707
Opelika, AL 36801

LINE ITEM DETAIL

INMATE CLOTHING AND SUPPLIES

GALVESTON COUNTY, TEXAS

BID # B122027
OPEN· 07/17/2012
2:00 PM

VENDOR ID

Item No	Product Code	Description	Quantity	Units	Catalog #	Unit Price	Extended Price
0031	20092	WORK PANTS - 8XLARGE - MENS	175	EA	_____	$_____	$_____
0032	20092	WORK PANTS - 9XLARGE - MENS	175	EA	_____	$_____	$_____
0033	20092	WORK PANTS - 10XLARGE - MENS	175	EA	_____	$_____	$_____
0034	20092	JUMPSUIT WITH SNAP CLOSURE - SMALL Triple stitch seam construction Heavy duty thread Elasticized waistband Reinforcing bartacks, color coded size labels Bias and seams to be cleanly finished and have no raw edges or frayed edges Fabric to be 7 1/2 oz Twill, 65% Polyester, 35% combed cotton Colors are to be green and navy	4	EA	_____	$_____	$_____
0035	20092	JUMPSUIT WITH SNAP CLOSURE - MEDIUM	8	EA	_____	$_____	$_____
0036	20092	JUMPSUIT WITH SNAP CLOSURE - LARGE	12	EA	_____	$_____	$_____

Voided

Tabb Textile Co , Inc
511 Pleasant Drive
P O Box 2707
Opelika, AL 36801

BID #: B122027
OPEN 07/17/2012
2:00 PM

LINE ITEM DETAIL

INMATE CLOTHING AND SUPPLIES

GALVESTON COUNTY, TEXAS

VENDOR ID

Item No	Product Code	Description	Quantity	Units	Catalog #	Unit Price	Extended Price
0037	20092	JUMPSUIT WITH SNAP CLOSURE - XLARGE	18	EA		$	$
0038	20092	JUMPSUIT WITH SNAP CLOSURE - XXLARGE	18	EA		$	$
0039	20092	JUMPSUIT WITH SNAP CLOSURE - XXXLARGE	12	EA		$	$
0040	20092	JUMPSUIT WITH SNAP CLOSURE - 4XLARGE	8	EA		$	$
0041	20092	JUMPSUIT WITH SNAP CLOSURE - 5XLARGE	4	EA		$	$
0042	20092	JUMPSUIT WITH SNAP CLOSURE - 6XLARGE	4	EA		$	$
0043	20092	JUMPSUIT WITH SNAP CLOSURE - 7XLARGE	4	EA		$	$
0044	20070	100% COTTON T-SHIRTS - MEDIUM - MENS	6	DZ		$	$
0045	20070	100% COTTON T-SHIRTS - LARGE - MENS	12	DZ		$	$

LINE ITEM DETAIL

INMATE CLOTHING AND SUPPLIES

GALVESTON COUNTY, TEXAS

Tabb Textile Co , Inc.
511 Pleasant Drive
P O Box 2707
Opelika, AL 36801

BID # B122027
OPEN: 07/17/2012
2 00 PM

VENDOR ID

Item No	Product Code	Description	Quantity	Units	Catalog #	Unit Price	Extended Price
0046	20070	100% COTTON T-SHIRTS - XLARGE - MENS	12	DZ		$	$
0047	20070	100% COTTON T-SHIRT - XXLARGE - MENS	4	DZ		$	$
0048	20070	100% COTTON T-SHIRTS - XXXLARGE - MENS	4	DZ		$	$
0049	20010	SWEATPANTS - SMALL COLOR TO BE NAVY	8	EA		$	$
0050	20010	SWEATPANTS - MEDIUM COLOR TO BE NAVY	12	EA		$	$
0051	20010	SWEATPANTS - LARGE COLOR TO BE NAVY	12	EA		$	$
0052	20010	SWEATPANTS - XLARGE COLOR TO BE NAVY	12	EA		$	$
0053	20010	SWEATPANTS - XXLARGE COLOR TO BE NAVY	8	EA		$	$

LINE ITEM DETAIL

INMATE CLOTHING AND SUPPLIES

GALVESTON COUNTY, TEXAS

Tabb Textile Co , Inc.
511 Pleasant Drive
P O Box 2707
Opelika, AL 36801

BID #: B122027
OPEN: 07/17/2012
2.00 PM

VENDOR ID

Item No	Product Code	Description	Quantity	Units	Catalog #	Unit Price	Extended Price
0054	20010	SWEATPANTS - XXXLARGE COLOR TO BE NAVY	4	EA	_____	$_____	$_____
0055	20010	CREW NECK SWEATSHIRT - MEDIUM COLOR TO BE GRAY	8	EA	_____	$_____	$_____
0056	20010	CREW NECK SWEATSHIRT - LARGE COLOR TO BE GREY	12	EA	_____	$_____	$_____
0057	20010	CREW NECK SWEATSHIRT - XLARGE COLOR TO BE GREY	12	EA	_____	$_____	$_____
0058	20010	CREW NECK SWEATSHIRT - XXLARGE COLOR TO BE GREY	8	EA	_____	$_____	$_____
0059	20010	CREW NECK SWEATSHIRT - XXXLARGE COLOR TO BE GREY	4	EA	_____	$_____	$_____
0060	20010	CREW NECK SWEATSHIRT - MEDIUM ORANGE IN COLOR LOGO ON BACK "TLC"	10	EA	_____	$_____	$_____

Tabb Textile Co , Inc.
511 Pleasant Drive
P O Box 2707
Opelika, AL 36801

BID #: B122027
OPEN. 07/17/2012
2·00 PM

LINE ITEM DETAIL

INMATE CLOTHING AND SUPPLIES

GALVESTON COUNTY, TEXAS

VENDOR ID

Item No.	Product Code	Description	Quantity	Units	Catalog #	Unit Price	Extended Price
0061	20010	CREW NECK SWEATSHIRT - LARGE ORANGE IN COLOR LOGO ON BACK "TLC"	10	EA	_____	$_____	$_____
0062	20010	CREW NECK SWEATSHIRT - XLARGE ORANGE IN COLOR LOGO ON BACK "TLC"	5	EA	_____	$_____	$_____
0063	20010	CREW NECK SWEATSHIRT - XXLARGE ORANGE IN COLOR LOGO ON BACK "TLC"	3	EA	_____	$_____	$_____
0064	20010	JERSEY KNIT PRACTICE SHORTS - MEDIUM Triple sewn, soft cotton/poly blend jersey knit 6" inseam with covered elastic waistband No pockets or drawstrings Navy in color	24	EA	_____	$_____	$_____
0065	20010	JERSEY KNIT PRACTICE SHORTS - LARGE	24	EA	_____	$_____	$_____
0066	20010	JERSEY KNIT PRACTICE SHORTS - XLARGE	36	EA	_____	$_____	$_____

LINE ITEM DETAIL

INMATE CLOTHING AND SUPPLIES

GALVESTON COUNTY, TEXAS

Tabb Textile Co , Inc
511 Pleasant Drive
P O Box 2707
Opelika, AL 36801

BID #: B122027
OPEN 07/17/2012
2:00 PM

VENDOR ID

Item No.	Product Code	Description	Quantity	Units	Catalog #	Unit Price	Extended Price
0067	20010	JERSEY KNIT PRACTICE SHORTS - 2XLARGE	24	EA	_____	$_____	$_____
0068	20010	JERSEY KNIT PRACTICE SHORTS - 3XLARGE	8	EA	_____	$_____	$_____
0069	20151	MENS SOCKS SOLID CREWS ONE SIZE FITS ALL 80% COTTON, 20% SYNTHETIC WHITE IN COLOR	50	DZ	_____	$_____	$_____
0070	20187	MENS BRIEFS POLYESTER/COTTON BLEND - MEDIUM - WHITE IN COLOR	12	DZ	_____	$_____	$_____
0071	20187	MENS BRIEFS POLYESTER/COTTON BLEND LARGE - WHITE IN COLOR	18	DZ	_____	$_____	$_____
0072	20187	MENS BRIEFS POLYESTER/COTTON BLEND XLARGE - WHITE IN COLOR	12	DZ	_____	$_____	$_____
0073	20187	MENS BRIEFS POLYESTER/COTTON BLEND 2XLARGE - WHITE IN COLOR	8	DZ	_____	$_____	$_____

Awarded

Tabb Textile Co , Inc
511 Pleasant Drive
P O Box 2707
Opelika, AL 36801

BID #. B122027
OPEN 07/17/2012
2.00 PM

LINE ITEM DETAIL

INMATE CLOTHING AND SUPPLIES

GALVESTON COUNTY, TEXAS

VENDOR ID

Item No	Product Code	Description	Quantity	Units	Catalog #	Unit Price	Extended Price
0074	20187	MENS BRIEFS POLYESTER/COTTON BLEND 3XLARGE - WHITE IN COLOR	4	DZ	_____	$_____	$_____
0075	20186	WOMENS PANTIES KNITTED ELASTIC WAIST & LEG BANDS SIZE 6 - WHITE IN COLOR	4	DZ	_____	$_____	$_____
0076	20186	WOMENS PANTIES KNITTED WAIST & LEG BANDS SIZE 7 - WHITE IN COLOR	8	DZ	_____	$_____	$_____
0077	20186	WOMENS PANTIES KNITTED WAIST & LEG BANDS SIZE 8 - WHITE IN COLOR	8	DZ	_____	$_____	$_____
0078	20186	WOMENS PANTIES KNITTED WAIST & LEG BANDS SIZE 9 - WHITE IN COLOR	4	DZ	_____	$_____	$_____
0079	20186	WOMENS PANTIES KNITTED ELASTIC WAIST & LEG BAND SIZE 10 - WHITE IN COLOR	4	DZ	_____	$_____	$_____

No Bid

Tabb Textile Co , Inc
511 Pleasant Drive
P O Box 2707
Opelika, AL 36801

LINE ITEM DETAIL

INMATE CLOTHING AND SUPPLIES

GALVESTON COUNTY, TEXAS

BID #. B122027
OPEN 07/17/2012
2·00 PM

VENDOR ID

Item No.	Product Code	Description	Quantity	Units	Catalog #	Unit Price	Extended Price
0080	20186	SPORTS BRA - SMALL (32 A/B) Hookless pull-on style No metal or plastic Wide, non-slip straps, racer-style back White in color	16	EA		$	$
0081	20186	SPORTS BRA - MEDIUM (34 A/B)	48	EA		$	$
0082	20186	SPORTS BRA - LARGE (36 A/B)	36	EA		$	$
0083	20186	SPORTS BRA - XLARGE (38 A/B)	12	EA		$	$
0084	20186	SPORTS BRA XXLARGE (40-42 B,C&D)	12	EA		$	$
0085	80048	SLIP ON TENNIS SHOES - SIZE 5 Heavy weight navy blue canvas uppers White rubber around sole Insoles stitched in place USA made only	1200	PR		$	$
0086	80048	SLIP ON TENNIS SHOES - SIZE 6	1200	PR		$	$

LINE ITEM DETAIL

INMATE CLOTHING AND SUPPLIES

GALVESTON COUNTY, TEXAS

Tabb Textile Co , Inc.
511 Pleasant Drive
P O Box 2707
Opelika, AL 36801

BID #· B122027
OPEN: 07/17/2012
2:00 PM

VENDOR ID

Item No	Product Code	Description	Quantity	Units	Catalog #	Unit Price	Extended Price
0087	80048	SLIP ON TENNIS SHOES - SIZE 7	1200	PR		$	$
0088	80048	SLIP ON TENNIS SHOES - SIZE 8	1200	PR		$	$
0089	80048	SLIP ON TENNIS SHOES - SIZE 9	1200	PR		$	$
0090	80048	SLIP ON TENNIS SHOES - SIZE 10	1200	PR		$	$
0091	80048	SLIP ON TENNIS SHOES - SIZE 11	1200	PR		$	$
0092	80048	SLIP ON TENNIS SHOES - SIZE 12	1200	PR		$	$
0093	80048	SLIP ON TENNIS SHOES - SIZE 13	1200	PR		$	$
0094	80048	SLIP ON TENNIS SHOES - SIZE 14	1200	PR		$	$
0095	80048	SLIP ON TENNIS SHOES - SIZE 15	1200	PR		$	$

Tabb Textile Co , Inc.
511 Pleasant Drive
P O Box 2707
Opelika, AL 36801

BID #: B122027
OPEN 07/17/2012
2.00 PM

LINE ITEM DETAIL

INMATE CLOTHING AND SUPPLIES

GALVESTON COUNTY, TEXAS

VENDOR ID

Item No	Product Code	Description	Quantity	Units	Catalog #	Unit Price	Extended Price
0096	80032	SLIP ON SANDALS SIZE SMALL Biochek Antimicrobial PVC Skid resistant sole to reduce risk of falls on wet floors Burgundy in color	1710	PR	_____	$_____	$_____
0097	80032	SLIP ON SANDALS SIZE MEDIUM	1710	PR	_____	$_____	$_____
0098	80032	SLIP ON SANDALS SIZE LARGE	1710	PR	_____	$_____	$_____
0099	80032	SLIP ON SANDALS SIZE XLARGE	1710	PR	_____	$_____	$_____
0100	80032	SLIP ON SANDALS SIZE XXLARGE	1710	PR	_____	$_____	$_____
0101	80032	SLIP ON SANDALS SIZE 3XLARGE	1710	PR	_____	$_____	$_____
0102	80032	SLIP ON SANDALS SIZE SIZE 5-6 (SMALL)	1710	PR	_____	$_____	$_____
0103	80032	SLIP ON SANDALS SIZE 7-8 (MEDIUM)	1710	PR	_____	$_____	$_____

Tabb Textile Co , Inc.
511 Pleasant Drive
P O Box 2707
Opelika, AL 36801

BID #· B122027
OPEN· 07/17/2012
2 00 PM

LINE ITEM DETAIL

INMATE CLOTHING AND SUPPLIES

GALVESTON COUNTY, TEXAS

VENDOR ID

Item No	Product Code	Description	Quantity	Units	Catalog #	Unit Price	Extended Price
0104	80032	SLIP ON SANDALS SIZE 9-10 (LARGE)	1710	PR		$	$ No Bid
0105	80032	SLIP ON SANDALS SIZE 11-12 (XLARGE)	1710	PR		$	$ No Bid
0106	80032	SLIP ON SANDALS SIZE 13-14 (XXLARGE)	1710	PR		$	$ No Bid
0107	95405	TOWELS HEAVY OR PREMIUM WEIGHT 100% COTTON MINIMUM 5 5 LBS PER DOZEN, WHITE IN COLOR IMPORTED OR DOMESTIC PRE-PACKAGED 25 DOZEN PER CASE 20" X 40" IN SIZE	600	DZ	BT130	$ 11.55	$ 6,930.00
0108	85092	WASHCLOTHS HEAVY OR PREMIUM WEIGHT COTTON 12" X 12" WHITE BATH WASHCLOTH	100	DZ	WC110	$ 2.70	$ 270.00
0109	61586	VINYL ID WASHABLE TAGS, 1000/ROLL	2	ROLL		$	$ No Bid
0110	51080	NETS, TIE CORD LAUNDRY 24" X 36"	12	DZ		$	$ No Bid
0111	20044	BDU TROUSERS - SMALL/REGULAR Military inspired construction, six (6) pockets, four (4) with button flaps Adjustable waist tab with four (4)	6	EA		$	$ No Bid

LINE ITEM DETAIL

INMATE CLOTHING AND SUPPLIES

GALVESTON COUNTY, TEXAS

Tabb Textile Co , Inc.
511 Pleasant Drive
P O Box 2707
Opelika, AL 36801

BID # B122027
OPEN· 07/17/2012
2:00 PM

VENDOR ID

Item No.	Product Code	Description	Quantity	Units	Catalog #	Unit Price	Extended Price
		bartacks Zipper fly with snap closure 65/35 Polyester/Cotton Ripstop Color to be Navy					
0112	20044	BDU TROUSER - MEDIUM/REGULAR Color to be Navy	15	EA		$	$ No Bid
0113	20044	BDU TROUSER - LARGE/REGULAR Color to be Navy	15	EA		$	$ No Bid
0114	20044	BDU TROUSER - XLARGE/REGULAR Color to be Navy	6	EA		$	$ No Bid
0115	20044	BDU TROUSER - 2XLARGE/REGULAR Color to be Navy	4	EA		$	$ No Bid

Extended Price Total of all Item $ 1200.00

BID #: B122027
OPEN: 07/19/2012
2:00 PM

INMATE CLOTHNG AND SUPPLIES
GALVESTON COUNTY, TEXAS

COMPANY INFORMATION BID FORM

THE COMPANY OF Uniforms Manufacturing Inc

Address PO Box 12716
Scottsdale, AZ 85267-2716

FEIN (TAX ID) 38-2198994

The following shall be returned with your bid Failure to do so may be ample cause for rejection of bid as non responsive It is the responsibility of the Bidder to ensure that Bidder has received all addenda

Items:	Confirmed (X):
1. **References (if required)**	_____
2. **Addenda, if any.**	#1____ #2____ #3____ #4 __
3. **One (1) original and four (4) copies of submittal**	_____
4. **Vendor Qualification packet**	_____
5. **Payment Terms:**	X net 30 _____Other

Person to contact regarding this bid Emily Pelligreen

Title Office manager Phone 480 368-9316 Fax 480 368-8556

E-mail address emily@umidirect.com

Name of person authorized to bind the Company Emily Pelligreen

Signature Emily Pelligreen Date 7-8-2012

Title Office manager Phone 480 368-9316 Fax 480-368-8556

E-mail address emily@umidirect.com

[redacted]

BID #: B122027
OPEN: 07/19/2012
2:00 PM

INMATE CLOTHNG AND SUPPLIES
GALVESTON COUNTY, TEXAS

SECTION TOTAL BID FORM

Having read and understood the instructions, terms, conditions, specifications, and invitation to bid we submit the following·

SECTION	TOTAL AMOUNT
Section I – Bedding, line items 1 – 6 (partial bid)	8390.00
Section II – Work shirts and Pants, line items 7- 43	164,995.90
Section III – Recreational Clothing, line items 44 – 69	2373.75
Section IV – Undergarments, line items 70 – 84	1087.04
Section V – Footwear, line items 85 – 106 (partial bid)	34,980.00
Section VI – Towels and Linens, line items 107 – 108	9827.00
Section VII – Laundry Items and Accessories, line items 109 – 110 (partial bid)	322.20
Section VIII – BDU Trousers, line items 111 - 115	1203.98

LINE ITEM DETAIL

INMATE CLOTHING AND SUPPLIES

GALVESTON COUNTY, TEXAS

BID #. B122027
OPEN: 07/17/2012
2·00 PM

VENDOR ID

Item No.	Product Code	Description	Quantity	Units	Catalog #	Unit Price	Extended Price
0001	85012	COTTON YEAR ROUND THERMAL BLANKET 100% cotton snag free closed weave blanket Preshrunk 6" selvaged sides and stitched ends to prevent dismantling Color to be white Weight approximately 2 5 lbs Size of 66 x 90 Thread count warp 48 ends per inch comprised of 10/1 and 20/2 yarn Thread count fill 30 per inch in 16/1 yarn Size: 66x96	1000	EA	—	$ 8.39	$ 8390.00
0002	85012	BLANKETS, 100% FIBER WOVEN POLYESTER Using center scrim that binds fibers together Tightly woven, will not pill, shred or mat even after washing 66" x 90" Color to be blue or navy Flame resistant, hemmed on all four (4) sides, seamless construction Machine washable	48	EA	—	$ no Bid	$ 0
0003	85052	MATTRESS COVER - VINYL To be made of "Healthguard" anti-microbial vinyl material, made from heavy duty vinyl, fire retardant, tear resistant, antibacterial Seams for	450	EA	—	$ no bid	$ 0

LINE ITEM DETAIL

INMATE CLOTHING AND SUPPLIES

GALVESTON COUNTY, TEXAS

BID #: B122027
OPEN: 07/17/2012
2:00 PM

VENDOR ID

Item No	Product Code	Description	Quantity	Units	Catalog #	Unit Price	Extended Price
		double-needle, lock-stitch, sewn with heavy duty nylon for long lasting durability Mattress cover is first quality Mildew and stain resistant Made of two layers of vinyl (12 2 ounce per square yard) bonded to scrim cloth This type of cover can be cleaned with mild, soapy water and/or Sani-Cloth Wipes Cover to fit mattress size 30" x 72" x 4" Color should be green					
0004	85052	MATTRESS COVERS TWILL Slip on mattress cover Cover is a green color Twill 65% polyester, 35% combed cotton industrial finish fabric for maximum durability in institutional laundry Seams are single-needle lock-stitch with heavy duty polyester thread Covers to be sewn, overlocked, with no raw edges, exposed to fit mattress 30" x 72" x 4"	1000	EA	—	$ no bid	$ 0
0005	85063	PILLOWS FABRIC COVERED MICRO GUARD Size 20" x 26", white in color	40	EA	—	$ no bid	$ 0

LINE ITEM DETAIL

INMATE CLOTHING AND SUPPLIES

GALVESTON COUNTY, TEXAS

BID #: B122027
OPEN: 07/17/2012
2:00 PM

VENDOR ID

Item No.	Product Code	Description	Quantity	Units	Catalog #	Unit Price	Extended Price
0006	85064	CLOTH PILLOW CASES WHITE IN COLOR	8	DZ	—	$ no bid	$ 0
0007	20085	V-NECK WORK SHIRTS - SMALL V-neck slip-on reglan sleeve No buttons One pocket over left breast double needle lock stitched and bartacked. All seams three (3) needle felled Sleeve and bottom hems double folded and lock stitched with bartacks at neck. Bias to be cleanly finished with no raw edges exposed Labels to be woven polyester 2 1/2" x 1 1/4" color coded by size Fabric to be 7 1/2 oz Twill, 65% Polyester combed cotton equal to Graniteville Mills 20/20 industrial laundry finish fabric Thread to be same color as the fabric All three (3) needle seams shall be cleanly finished and have no raw or frayed edges SAMPLE OF ONE SHIRT MUST BE SUBMITTED WITH BID Colors to be gray, navy, orange, khaki, and green Logo on back "GALVESTON COUNTY JAIL"	1625	EA	—	$ 4.85	$ 7881.25

LINE ITEM DETAIL

INMATE CLOTHING AND SUPPLIES

GALVESTON COUNTY, TEXAS

BID #: B122027
OPEN: 07/17/2012
2:00 PM

VENDOR ID

Item No.	Product Code	Description	Quantity	Units	Catalog #	Unit Price	Extended Price
0008	20085	V-NECK WORK SHIRTS - MEDIUM	1625	EA	—	$ 4.85	$ 7881.25
0009	20085	V-NECK WORK SHIRTS - LARGE	1625	EA	—	$ 4.85	$ 7881.25
0010	20085	V-NECK WORK SHIRTS - X-LARGE	1625	EA	—	$ 4.85	$ 7881.25
0011	20085	V-NECK WORK SHIRTS - XXLARGE	1625	EA	—	$ 4.85	$ 7881.25
0012	20085	V-NECK WORK SHIRTS - XXXLARGE	1625	EA	—	$ 5.35	$ 8693.75
0013	20085	V-NECK WORK SHIRTS 4X-LARGE	1625	EA	—	$ 5.35	$ 8693.75
0014	20085	V-NECK WORK SHIRTS - 5X-LARGE	1625	EA	—	$ 5.35	$ 8693.75
0015	20085	V-NECK WORK SHIRTS - SMALL MENS V-neck slip-on reglan sleeve No buttons One pocket over left breast double needle lock stitched and bartacked All seams three (3) needle felled Sleeve and bottom hems double folded and lock stitched with bartacks at neck Bias to be cleanly finished	4	EA	—	$ 4.85	$ 19.40

LINE ITEM DETAIL

INMATE CLOTHING AND SUPPLIES

GALVESTON COUNTY, TEXAS

BID #: B122027
OPEN: 07/17/2012
2:00 PM

VENDOR ID

Item No	Product Code	Description	Quantity	Units	Catalog #	Unit Price	Extended Price
		with no raw edges exposed Labels to be woven polyester 2 1/2" x 1 1/4" color coded by size Fabric to be 7 1/2 oz Twill, 65% Polyester combed cotton equal to Graniteville Mills 20/20 industrial laundry finish fabric Thread to be same color as the fabric All three (3) needle seams shall be cleanly finished and have no raw or frayed edges SAMPLE OF ONE SHIRT MUST BE SUBMITTED WITH BID Color to be orange Logo on back "TLC"					
0016	20085	V-NECK WORK SHIRTS - MEDIUM - MENS	8	EA	~~4.85~~	$ 4.85	$ 38.80
0017	20085	V-NECK WORK SHIRTS - LARGE - MENS	8	EA	~~4.85~~	$ 4.85	$ 38.80
0018	20085	V-NECK WORK SHIRTS X-LARGE - MENS	8	EA	~~4.85~~	$ 4.85	$ 38.80
0019	20085	V-NECK WORK SHIRTS - XXLARGE - MENS	4	EA	~~4.85~~	$ 4.85	$ 19.40
0020	20092	WORK PANTS - XSMALL - MENS Slip on elastic wasit with mock fly Elastic to be woven 1 1/2" heat resistant 26 gauge rubber, four rows	1735	EA	—	$ 5.70	$ 9889.50

LINE ITEM DETAIL

INMATE CLOTHING AND SUPPLIES

GALVESTON COUNTY, TEXAS

BID #. B122027
OPEN: 07/17/2012
2:00 PM

VENDOR ID

Item No.	Product Code	Description	Quantity	Units	Catalog #	Unit Price	Extended Price
		of lock stitched to pants (chain stitching is not acceptable) Elastic to be guaranteed for life of the garment from losing its elasticity Labels to be woven polyester 2 1/2" x 1 1/4" color coded by size All seams three (3) needle felled Crotch mock fly to be sew serged, double needle lock stitched and bartacked Leg hems double folded and lock stitched. All inseams to be 32" hemmed Fabric to be 7 1/2 oz Twill 65% Polyester, 35% combed cotton equal to Graniteville 20/20 twill industrial laundry finish Thread to be the same color as the fabric All three (3) needle seams shall be clearly finished and have no raw or frayed edges SAMPLE OF ONE PAIR OF PANTS MUST BE SUBMITTED WITH BID Colors to be gray, orange, khaki, and green					
0021	20092	WORK PANTS - SMALL MENS	1735	EA	—	$ 5.70	$ 9889.50

LINE ITEM DETAIL

INMATE CLOTHING AND SUPPLIES

GALVESTON COUNTY, TEXAS

BID #. B122027
OPEN: 07/17/2012
2:00 PM

VENDOR ID

Item No	Product Code	Description	Quantity	Units	Catalog #	Unit Price	Extended Price
0022	20092	WORK PANTS - MEDIUM - MENS	1735	EA	—	$ 5.70	$ 9889.50
0023	20092	WORK PANTS - LARGE - MENS	1735	EA	—	$ 5.70	$ 9889.50
0024	20092	WORK PANTS - XLARGE - MENS	1735	EA	—	$ 5.70	$ 9889.50
0025	20092	WORK PANTS - XXLARGE - MENS	1735	EA	—	$ 5.70	$ 9889.50
0026	20092	WORK PANTS - XXXLARGE - MENS	1735	EA	—	$ 6.30	$ 10,930.50
0027	20092	WORK PANTS - 4XLARGE - MENS	1735	EA	—	$ 6.30	$ 10,930.50
0028	20092	WORK PANTS - 5XLARGE - MENS	1735	EA	—	$ 6.30	$ 10,930.50
0029	20092	WORK PANTS - 6XLARGE - MENS	175	EA	—	$ 6.90	$ 1207.50
0030	20092	WORK PANTS - 7XLARGE - MENS	175	EA	—	$ 6.90	$ 1207.50

LINE ITEM DETAIL

INMATE CLOTHING AND SUPPLIES

GALVESTON COUNTY, TEXAS

BID #: B122027
OPEN: 07/17/2012
2:00 PM

VENDOR ID

Item No	Product Code	Description	Quantity	Units	Catalog #	Unit Price	Extended Price
0031	20092	WORK PANTS - 8XLARGE - MENS	175	EA	—	$ 6.90	$ 1207.50
0032	20092	WORK PANTS - 9XLARGE - MENS	175	EA	—	$ 7.60	$ 1330.00
0033	20092	WORK PANTS - 10XLARGE - MENS	175	EA	—	$ 7.60	$ 1330.00
0034	20092	JUMPSUIT WITH SNAP CLOSURE - SMALL Triple stitch seam construction Heavy duty thread Elasticized waistband Reinforcing bartacks, color coded size labels Bias and seams to be cleanly finished and have no raw edges or frayed edges Fabric to be 7 1/2 oz Twill, 65% Polyester, 35% combed cotton Colors are to be green and navy	4	EA	—	$ 9.75	$ 39.00
0035	20092	JUMPSUIT WITH SNAP CLOSURE - MEDIUM	8	EA	—	$ 9.75	$ 78.00
0036	20092	JUMPSUIT WITH SNAP CLOSURE - LARGE	12	EA	—	$ 9.75	$ 117.00

LINE ITEM DETAIL

INMATE CLOTHING AND SUPPLIES

GALVESTON COUNTY, TEXAS

BID #: B122027
OPEN: 07/17/2012
2:00 PM

VENDOR ID

Item No	Product Code	Description	Quantity	Units	Catalog #	Unit Price	Extended Price
0037	20092	JUMPSUIT WITH SNAP CLOSURE - XLARGE	18	EA	—	$ 9.75	$ 175.50
0038	20092	JUMPSUIT WITH SNAP CLOSURE - XXLARGE	18	EA	—	$ 9.75	$ 175.50
0039	20092	JUMPSUIT WITH SNAP CLOSURE - XXXLARGE	12	EA	—	$ 10.75	$ 129.00
0040	20092	JUMPSUIT WITH SNAP CLOSURE - 4XLARGE	8	EA	—	$ 10.75	$ 86.00
0041	20092	JUMPSUIT WITH SNAP CLOSURE - 5XLARGE	4	EA	—	$ 11.85	$ 47.40
0042	20092	JUMPSUIT WITH SNAP CLOSURE - 6XLARGE	4	EA	—	$ 11.85	$ 47.40
0043	20092	JUMPSUIT WITH SNAP CLOSURE - 7XLARGE	4	EA	—	$ 11.85	$ 47.40
0044	20070	100% COTTON T-SHIRTS - MEDIUM - MENS	6	DZ	—	$ 16.25	$ 97.50
0045	20070	100% COTTON T-SHIRTS - LARGE - MENS	12	DZ	—	$ 16.25	$ 195.00

LINE ITEM DETAIL

INMATE CLOTHING AND SUPPLIES

GALVESTON COUNTY, TEXAS

BID #: B122027
OPEN: 07/17/2012
2:00 PM

VENDOR ID

Item No	Product Code	Description	Quantity	Units	Catalog #	Unit Price	Extended Price
0046	20070	100% COTTON T-SHIRTS - XLARGE - MENS	12	DZ	—	$ 16.25	$ 195.00
0047	20070	100% COTTON T-SHIRT - XXLARGE - MENS	4	DZ	—	$ 17.20	$ 68.80
0048	20070	100% COTTON T-SHIRTS - XXXLARGE - MENS	4	DZ	—	$ 17.20	$ 68.80
0049	20010	SWEATPANTS - SMALL COLOR TO BE NAVY	8	EA	—	$ 5.85	$ 46.80
0050	20010	SWEATPANTS - MEDIUM COLOR TO BE NAVY	12	EA	—	$ 5.85	$ 70.20
0051	20010	SWEATPANTS - LARGE COLOR TO BE NAVY	12	EA	—	$ 5.85	$ 70.20
0052	20010	SWEATPANTS - XLARGE COLOR TO BE NAVY	12	EA	—	$ 5.85	$ 70.20
0053	20010	SWEATPANTS - XXLARGE COLOR TO BE NAVY	8	EA	—	$ 6.50	$ 52.00

LINE ITEM DETAIL

INMATE CLOTHING AND SUPPLIES

GALVESTON COUNTY, TEXAS

BID #: B122027
OPEN: 07/17/2012
2:00 PM

VENDOR ID

Item No	Product Code	Description	Quantity	Units	Catalog #	Unit Price	Extended Price
0054	20010	SWEATPANTS - XXXLARGE COLOR TO BE NAVY	4	EA	—	$ 6.50	$ 26.00
0055	20010	CREW NECK SWEATSHIRT - MEDIUM COLOR TO BE GRAY	8	EA	—	$ 6.85	$ 54.80
0056	20010	CREW NECK SWEATSHIRT - LARGE COLOR TO BE GREY	12	EA	—	$ 6.85	$ 82.20
0057	20010	CREW NECK SWEATSHIRT - XLARGE COLOR TO BE GREY	12	EA	—	$ 6.85	$ 82.20
0058	20010	CREW NECK SWEATSHIRT - XXLARGE COLOR TO BE GREY	8	EA	—	$ 7.50	$ 60.00
0059	20010	CREW NECK SWEATSHIRT - XXXLARGE COLOR TO BE GREY	4	EA	—	$ 7.50	$ 30.00
0060	20010	CREW NECK SWEATSHIRT - MEDIUM ORANGE IN COLOR LOGO ON BACK "TLC"	10	EA	—	$ 8.80	$ 88.00

LINE ITEM DETAIL

INMATE CLOTHING AND SUPPLIES

GALVESTON COUNTY, TEXAS

BID #: B122027
OPEN. 07/17/2012
2:00 PM

VENDOR ID

Item No	Product Code	Description	Quantity	Units	Catalog #	Unit Price	Extended Price
0061	20010	CREW NECK SWEATSHIRT - LARGE ORANGE IN COLOR LOGO ON BACK "TLC"	10	EA	—	$ 8.80	$ 88.00
0062	20010	CREW NECK SWEATSHIRT - XLARGE ORANGE IN COLOR LOGO ON BACK "TLC"	5	EA	—	$ 8.80	$ 44.00
0063	20010	CREW NECK SWEATSHIRT - XXLARGE ORANGE IN COLOR LOGO ON BACK "TLC"	3	EA	—	$ 9.45	$ 28.35
0064	20010	JERSEY KNIT PRACTICE SHORTS - MEDIUM Triple sewn, soft cotton/poly blend jersey knit 6" inseam with covered elastic waistband No pockets or drawstrings Navy in color	24	EA	—	$ 5.25	$ 126.00
0065	20010	JERSEY KNIT PRACTICE SHORTS - LARGE	24	EA	—	$ 5.25	$ 126.00
0066	20010	JERSEY KNIT PRACTICE SHORTS - XLARGE	36	EA	—	$ 5.25	$ 189.00

LINE ITEM DETAIL

INMATE CLOTHING AND SUPPLIES

GALVESTON COUNTY, TEXAS

BID #: B122027
OPEN. 07/17/2012
2:00 PM

VENDOR ID

Item No	Product Code	Description	Quantity	Units	Catalog #	Unit Price	Extended Price
0067	20010	JERSEY KNIT PRACTICE SHORTS - 2XLARGE	24	EA	~~5.8~~ ETT	$ 5 85	$ 140.40
0068	20010	JERSEY KNIT PRACTICE SHORTS - 3XLARGE	8	EA	—	$ 5.85	$ 46.80
0069	20151	MENS SOCKS SOLID CREWS ONE SIZE FITS ALL 80% COTTON, 20% SYNTHETIC WHITE IN COLOR	50	DZ	—	$ 4.55	$ 227 50
0070	20187	MENS BRIEFS POLYESTER/COTTON BLEND - MEDIUM - WHITE IN COLOR	12	DZ	—	$ 11.38	$ 136.56
0071	20187	MENS BRIEFS POLYESTER/COTTON BLEND LARGE - WHITE IN COLOR	18	DZ	—	$ 11.38	$ 204.84
0072	20187	MENS BRIEFS POLYESTER/COTTON BLEND XLARGE - WHITE IN COLOR	12	DZ	—	$ 11.38	$ 136 56
0073	20187	MENS BRIEFS POLYESTER/COTTON BLEND 2XLARGE - WHITE IN COLOR	8	DZ	—	$ 12 70	$ 101.60

LINE ITEM DETAIL

INMATE CLOTHING AND SUPPLIES

GALVESTON COUNTY, TEXAS

BID #: B122027
OPEN: 07/17/2012
2:00 PM

VENDOR ID

Item No.	Product Code	Description	Quantity	Units	Catalog #	Unit Price	Extended Price
0074	20187	MENS BRIEFS POLYESTER/COTTON BLEND 3XLARGE - WHITE IN COLOR	4	DZ	—	$ 13.99	$ 55.96
0075	20186	WOMENS PANTIES KNITTED ELASTIC WAIST & LEG BANDS SIZE 6 - WHITE IN COLOR	4	DZ	—	$ 7.00	$ 28.00
0076	20186	WOMENS PANTIES KNITTED WAIST & LEG BANDS SIZE 7 - WHITE IN COLOR	8	DZ	—	$ 7.00	$ 56.00
0077	20186	WOMENS PANTIES KNITTED WAIST & LEG BANDS SIZE 8 - WHITE IN COLOR	8	DZ	—	$ 7.00	$ 56.00
0078	20186	WOMENS PANTIES KNITTED WAIST & LEG BANDS SIZE 9 - WHITE IN COLOR	4	DZ	—	$ 7.00	$ 28.00
0079	20186	WOMENS PANTIES KNITTED ELASTIC WAIST & LEG BAND SIZE 10 - WHITE IN COLOR	4	DZ	—	$ 7.00	$ 28.00

LINE ITEM DETAIL

INMATE CLOTHING AND SUPPLIES

GALVESTON COUNTY, TEXAS

BID #: B122027
OPEN: 07/17/2012
2:00 PM

VENDOR ID

Item No.	Product Code	Description	Quantity	Units	Catalog #	Unit Price	Extended Price
0080	20186	SPORTS BRA - SMALL (32 A/B) Hookless pull-on style No metal or plastic Wide, non-slip straps, racer-style back White in color	16	EA	—	$ 2.05	$ 32.80
0081	20186	SPORTS BRA - MEDIUM (34 A/B)	48	EA	—	$ 2.05	$ 98.40
0082	20186	SPORTS BRA - LARGE (36 A/B)	36	EA	—	$ 2.05	$ 73.80
0083	20186	SPORTS BRA - XLARGE (38 A/B)	12	EA	—	$ 2.05	$ 24.60
0084	20186	SPORTS BRA XXLARGE (40-42 B,C&D)	12	EA	—	$ 2.16	$ 25.92
0085	80048	SLIP ON TENNIS SHOES - SIZE 5 Heavy weight navy blue canvas uppers White rubber around sole Insoles stitched in place USA made only → import only! 90 day delivery	1200	PR	—	$ 2.65	$ 3180.00
0086	80048	SLIP ON TENNIS SHOES - SIZE 6	1200	PR	—	$ 2.65	$ 3180.00

LINE ITEM DETAIL

INMATE CLOTHING AND SUPPLIES

GALVESTON COUNTY, TEXAS

BID #: B122027
OPEN: 07/17/2012
2:00 PM

VENDOR ID

Item No	Product Code	Description	Quantity	Units	Catalog #	Unit Price	Extended Price
0087	80048	SLIP ON TENNIS SHOES - SIZE 7	1200	PR	—	$ 2.65	$ 3180.00
0088	80048	SLIP ON TENNIS SHOES - SIZE 8	1200	PR	—	$ 2.65	$ 3180 00
0089	80048	SLIP ON TENNIS SHOES - SIZE 9	1200	PR	—	$ 2 65	$ 3180.00
0090	80048	SLIP ON TENNIS SHOES - SIZE 10	1200	PR	—	$ 2.65	$ 3180.00
0091	80048	SLIP ON TENNIS SHOES - SIZE 11	1200	PR	—	$ 2.65	$ 3180 00
0092	80048	SLIP ON TENNIS SHOES - SIZE 12	1200	PR	—	$ 2.65	$ 3180.00
0093	80048	SLIP ON TENNIS SHOES - SIZE 13	1200	PR	—	$ 2.65	$ 3180 00
0094	80048	SLIP ON TENNIS SHOES - SIZE 14	1200	PR	—	$ 2.65	$ 3180.00
0095	80048	SLIP ON TENNIS SHOES - SIZE 15	1200	PR	—	$ 2.65	$ 3180.00

LINE ITEM DETAIL

INMATE CLOTHING AND SUPPLIES

GALVESTON COUNTY, TEXAS

BID #: B122027
OPEN: 07/17/2012
2:00 PM

VENDOR ID

Item No	Product Code	Description	Quantity	Units	Catalog #	Unit Price	Extended Price
0096	80032	SLIP ON SANDALS SIZE SMALL Biochek Antimicrobial PVC Skid resistant sole to reduce risk of falls on wet floors Burgundy in color	1710	PR	—	$ n/B	$ 0
0097	80032	SLIP ON SANDALS SIZE MEDIUM	1710	PR	—	$ n/B	$ 0
0098	80032	SLIP ON SANDALS SIZE LARGE	1710	PR	—	$ n/B	$ 0
0099	80032	SLIP ON SANDALS SIZE XLARGE	1710	PR	—	$ n/B	$ 0
0100	80032	SLIP ON SANDALS SIZE XXLARGE	1710	PR	—	$ n/B	$ 0
0101	80032	SLIP ON SANDALS SIZE 3XLARGE	1710	PR	—	$ n/B	$ 0
0102	80032	SLIP ON SANDALS SIZE SIZE 5-6 (SMALL)	1710	PR	—	$ n/B	$ 0
0103	80032	SLIP ON SANDALS SIZE 7-8 (MEDIUM)	1710	PR	—	$ n/B	$ 0

LINE ITEM DETAIL

INMATE CLOTHING AND SUPPLIES

GALVESTON COUNTY, TEXAS

BID #: B122027
OPEN: 07/17/2012
2:00 PM

VENDOR ID

Item No	Product Code	Description	Quantity	Units	Catalog #	Unit Price	Extended Price
0104	80032	SLIP ON SANDALS SIZE 9-10 (LARGE)	1710	PR	—	$ n/B	$ 0
0105	80032	SLIP ON SANDALS SIZE 11-12 (XLARGE)	1710	PR	—	$ n/B	$ 0
0106	80032	SLIP ON SANDALS SIZE 13-14 (XXLARGE)	1710	PR	—	$ n/B	$ 0
0107	95405	TOWELS HEAVY OR PREMIUM WEIGHT 100% COTTON MINIMUM 5 5 LBS PER DOZEN, WHITE IN COLOR IMPORTED OR DOMESTIC PRE-PACKAGED 25 DOZEN PER CASE 20" X 40" IN SIZE	600	DZ	—	$ 15.90	$ 9540.00
0108	85092	WASHCLOTHS HEAVY OR PREMIUM WEIGHT COTTON 12" X 12" WHITE BATH WASHCLOTH	100	DZ	—	$ 2.87	$ 287.00
0109	61586	VINYL ID WASHABLE TAGS, 1000/ROLL	2	ROLL	—	$ n/B	$ 0
0110	51080	NETS, TIE CORD LAUNDRY 24" X 36"	12	DZ	—	$ 26.85	$ 322.20
0111	20044	BDU TROUSERS - SMALL/REGULAR Military inspired construction, six (6) pockets, four (4) with button flaps Adjustable waist tab with four (4)	6	EA	—	$ 25.89	$ 155.34

LINE ITEM DETAIL

INMATE CLOTHING AND SUPPLIES

GALVESTON COUNTY, TEXAS

BID #: B122027
OPEN: 07/17/2012
2:00 PM

VENDOR ID

Item No	Product Code	Description	Quantity	Units	Catalog #	Unit Price	Extended Price
		bartacks Zipper fly with snap closure 65/35 Polyester/Cotton Ripstop Color to be Navy					
0112	20044	BDU TROUSER - MEDIUM/REGULAR Color to be Navy	15	EA	—	$ 25.89	$ 388.35
0113	20044	BDU TROUSER - LARGE/REGULAR Color to be Navy	15	EA	—	$ 25.89	$ 388.35
0114	20044	BDU TROUSER - XLARGE/REGULAR Color to be Navy	6	EA	—	$ 25.89	$ 155.34
0115	20044	BDU TROUSER - 2XLARGE/REGULAR Color to be Navy	4	EA	—	$ 29.15	$ 116.60
						Extended Price Total of all Iten	$ 223,179.87

BID #: B122027
OPEN: 07/19/2012
2:00 PM

INMATE CLOTHNG AND SUPPLIES
GALVESTON COUNTY, TEXAS

COMPANY INFORMATION BID FORM

THE COMPANY OF American Textile Systems

Address 13151 Midway Place, Cerritos, CA 90703

FEIN (TAX ID) 33-0491327

The following shall be returned with your bid Failure to do so may be ample cause for rejection of bid as non responsive It is the responsibility of the Bidder to ensure that Bidder has received all addenda

Items·	**Confirmed (X):**
1. References (if required)	_____
2. Addenda, if any.	**#1**_____ **#2**____ **#3**____ **#4** ___
3 One (1) original and four (4) copies of submittal	x
4. Vendor Qualification packet	x
5. Payment Terms:	x **net 30** _____**Other**

Person to contact regarding this bid Julia Weber

Title Regional Sales Manager Phone 562-229-0036 Fax 562-229-0597

E-mail address Julia@amtexsys com

Name of person authorized to bind the Company Julia Weber

Signature Julia E Weber Date 7/13/12

Title Regional Sales Manager Phone 562-229-0036 Fax 562-229-0597

E-mail address Julia@amtexsys com

BID #: B122027
OPEN: 07/19/2012
2.00 PM

INMATE CLOTHNG AND SUPPLIES
GALVESTON COUNTY, TEXAS

SECTION TOTAL BID FORM

Having read and understood the instructions, terms, conditions, specifications, and invitation to bid we submit the following

SECTION	TOTAL AMOUNT
Section I – Bedding, line items 1 – 6	$35,657 04
Section II – Work shirts and Pants, line items 7- 43	NO BID
Section III – Recreational Clothing, line items 44 – 69	NO BID
Section IV – Undergarments, line items 70 – 84	NO BID
Section V – Footwear, line items 85 – 106	NO BID
Section VI – Towels and Linens, line items 107 – 108	$5,785 00
Section VII – Laundry Items and Accessories, line items 109 – 110	NO BID
Section VIII – BDU Trousers, line items 111 - 115	NO BID

LINE ITEM DETAIL

INMATE CLOTHING AND SUPPLIES

GALVESTON COUNTY, TEXAS

BID #: B122027
OPEN: 07/17/2012
2.00 PM

VENDOR ID

Item No.	Product Code	Description	Quantity	Units	Catalog #	Unit Price	Extended Price
0001	85012	COTTON YEAR ROUND THERMAL BLANKET 100% cotton snag free closed weave blanket Preshrunk 6" selvaged sides and stitched ends to prevent dismantling Color to be white Weight approximately 2 5 lbs Size of 66 x 90 Thread count warp 48 ends per inch comprised of 10/1 and 20/2 yarn Thread count fill 30 per inch in 16/1 yarn	1000	EA	6690-SFW	$ 5 95	$ 5,950 00
0002	85012	BLANKETS, 100% FIBER WOVEN POLYESTER Using center scrim that binds fibers together Tightly woven, will not pill, shred or mat even after washing 66" x 90" Color to be blue or navy Flame resistant, hemmed on all four (4) sides, seamless construction Machine washable	48	EA	6690-PB	$ 10 99	$ 527 52
0003	85052	MATTRESS COVER - VINYL To be made of "Healthguard" anti-microbial vinyl material, made from heavy duty vinyl, fire retardant, tear resistant, antibacterial Seams for	450	EA	35MCQA	$ 35 00	$ 15,750 00

LINE ITEM DETAIL

INMATE CLOTHING AND SUPPLIES

GALVESTON COUNTY, TEXAS

BID #: B122027
OPEN: 07/17/2012
2:00 PM

VENDOR ID

Item No	Product Code	Description	Quantity	Units	Catalog #	Unit Price	Extended Price
		double-needle, lock-stitch, sewn with heavy duty nylon for long lasting durability Mattress cover is first quality Mildew and stain resistant Made of two layers of vinyl (12 2 ounce per square yard) bonded to scrim cloth This type of cover can be cleaned with mild, soapy water and/or Sani-Cloth Wipes Cover to fit mattress size 30" x 72" x 4" Color should be green					
0004	85052	MATTRESS COVERS TWILL Slip on mattress cover Cover is a green color Twill 65% polyester, 35% combed cotton industrial finish fabric for maximum durability in institutional laundry Seams are single-needle lock-stitch with heavy duty polyester thread Covers to be sewn, overlocked, with no raw edges, exposed to fit mattress 30" x 72" x 4"	1000	EA	FTWL21SPmc	$ 12 99	$ 12,990 00
0005	85063	PILLOWS FABRIC COVERED MICRO GUARD Size 20" x 26", white in color	40	EA	2026-19SW	$ 7 99	$ 319 60

LINE ITEM DETAIL

INMATE CLOTHING AND SUPPLIES

GALVESTON COUNTY, TEXAS

BID #: B122027
OPEN. 07/17/2012
2:00 PM

VENDOR ID

Item No	Product Code	Description	Quantity	Units	Catalog #	Unit Price	Extended Price
0006	85064	CLOTH PILLOW CASES WHITE IN COLOR	8	DZ	4234-C130	$ 14 99	$119 92
0007	20085	V-NECK WORK SHIRTS - SMALL V-neck slip-on reglan sleeve No buttons One pocket over left breast double needle lock stitched and bartacked All seams three (3) needle felled Sleeve and bottom hems double folded and lock stitched with bartacks at neck Bias to be cleanly finished with no raw edges exposed Labels to be woven polyester 2 1/2" x 1 1/4" color coded by size Fabric to be 7 1/2 oz Twill, 65% Polyester combed cotton equal to Graniteville Mills 20/20 industrial laundry finish fabric Thread to be same color as the fabric All three (3) needle seams shall be cleanly finished and have no raw or frayed edges SAMPLE OF ONE SHIRT MUST BE SUBMITTED WITH BID Colors to be gray, navy, orange, khaki, and green Logo on back "GALVESTON COUNTY JAIL"	1625	EA	no bid	$	$

LINE ITEM DETAIL

INMATE CLOTHING AND SUPPLIES

GALVESTON COUNTY, TEXAS

BID #: B122027
OPEN: 07/17/2012
2:00 PM

VENDOR ID

Item No	Product Code	Description	Quantity	Units	Catalog #	Unit Price	Extended Price
0008	20085	V-NECK WORK SHIRTS - MEDIUM	1625	EA	no bid	$	$
0009	20085	V-NECK WORK SHIRTS - LARGE	1625	EA	no bid	$	$
0010	20085	V-NECK WORK SHIRTS - X-LARGE	1625	EA	no bid	$	$
0011	20085	V-NECK WORK SHIRTS - XXLARGE	1625	EA	no bid	$	$
0012	20085	V-NECK WORK SHIRTS - XXXLARGE	1625	EA	no bid	$	$
0013	20085	V-NECK WORK SHIRTS 4X-LARGE	1625	EA	no bid	$	$
0014	20085	V-NECK WORK SHIRTS - 5X-LARGE	1625	EA	no bid	$	$
0015	20085	V-NECK WORK SHIRTS - SMALL MENS V-neck slip-on reglan sleeve No buttons One pocket over left breast double needle lock stitched and bartacked All seams three (3) needle felled Sleeve and bottom hems double folded and lock stitched with bartacks at neck Bias to be cleanly finished	4	EA	no bid	$	$

LINE ITEM DETAIL

INMATE CLOTHING AND SUPPLIES

GALVESTON COUNTY, TEXAS

BID #: B122027
OPEN: 07/17/2012
2:00 PM

VENDOR ID

Item No	Product Code	Description	Quantity	Units	Catalog #	Unit Price	Extended Price
		with no raw edges exposed Labels to be woven polyester 2 1/2" x 1 1/4" color coded by size Fabric to be 7 1/2 oz Twill, 65% Polyester combed cotton equal to Graniteville Mills 20/20 industrial laundry finish fabric Thread to be same color as the fabric All three (3) needle seams shall be cleanly finished and have no raw or frayed edges SAMPLE OF ONE SHIRT MUST BE SUBMITTED WITH BID Color to be orange Logo on back "TLC"					
0016	20085	V-NECK WORK SHIRTS - MEDIUM - MENS	8	EA	NO BID	$	$
0017	20085	V-NECK WORK SHIRTS - LARGE - MENS	8	EA	NO BID	$	$
0018	20085	V-NECK WORK SHIRTS X-LARGE - MENS	8	EA	NO BID	$	$
0019	20085	V-NECK WORK SHIRTS - XXLARGE - MENS	4	EA	NO BID	$	$
0020	20092	WORK PANTS - XSMALL - MENS Slip on elastic wasit with mock fly Elastic to be woven 1 1/2" heat resistant 26 gauge rubber, four rows	1735	EA	NO BID	$	$

LINE ITEM DETAIL

INMATE CLOTHING AND SUPPLIES

GALVESTON COUNTY, TEXAS

BID #: B122027
OPEN: 07/17/2012
2:00 PM

VENDOR ID

Item No	Product Code	Description	Quantity	Units	Catalog #	Unit Price	Extended Price
		of lock stitched to pants (chain stitching is not acceptable) Elastic to be guaranteed for life of the garment from losing its elasticity Labels to be woven polyester 2 1/2" x 1 1/4" color coded by size All seams three (3) needle felled Crotch mock fly to be sew serged, double needle lock stitched and bartacked Leg hems double folded and lock stitched All inseams to be 32" hemmed Fabric to be 7 1/2 oz Twill 65% Polyester, 35% combed cotton equal to Graniteville 20/20 twill industrial laundry finish Thread to be the same color as the fabric All three (3) needle seams shall be clearly finished and have no raw or frayed edges SAMPLE OF ONE PAIR OF PANTS MUST BE SUBMITTED WITH BID Colors to be gray, orange, khaki, and green					
0021	20092	WORK PANTS - SMALL MENS	1735	EA	NO BID	$	$

LINE ITEM DETAIL

INMATE CLOTHING AND SUPPLIES

GALVESTON COUNTY, TEXAS

BID #: B122027
OPEN: 07/17/2012
2:00 PM

VENDOR ID

Item No	Product Code	Description	Quantity	Units	Catalog #	Unit Price	Extended Price
0022	20092	WORK PANTS - MEDIUM - MENS	1735	EA	NO BID	$	$
0023	20092	WORK PANTS - LARGE - MENS	1735	EA	NO BID	$	$
0024	20092	WORK PANTS - XLARGE - MENS	1735	EA	NO BID	$	$
0025	20092	WORK PANTS - XXLARGE - MENS	1735	EA	NO BID	$	$
0026	20092	WORK PANTS - XXXLARGE - MENS	1735	EA	NO BID	$	$
0027	20092	WORK PANTS - 4XLARGE - MENS	1735	EA	NO BID	$	$
0028	20092	WORK PANTS - 5XLARGE - MENS	1735	EA	NO BID	$	$
0029	20092	WORK PANTS - 6XLARGE - MENS	175	EA	NO BID	$	$
0030	20092	WORK PANTS - 7XLARGE - MENS	175	EA	NO BID	$	$

LINE ITEM DETAIL

INMATE CLOTHING AND SUPPLIES

GALVESTON COUNTY, TEXAS

BID #: B122027
OPEN: 07/17/2012
2:00 PM

VENDOR ID

Item No	Product Code	Description	Quantity	Units	Catalog #	Unit Price	Extended Price
0031	20092	WORK PANTS - 8XLARGE - MENS	175	EA	NO BID	$	$
0032	20092	WORK PANTS - 9XLARGE - MENS	175	EA	NO BID	$	$
0033	20092	WORK PANTS - 10XLARGE - MENS	175	EA	NO BID	$	$
0034	20092	JUMPSUIT WITH SNAP CLOSURE - SMALL Triple stitch seam construction Heavy duty thread Elasticized waistband Reinforcing bartacks, color coded size labels Bias and seams to be cleanly finished and have no raw edges or frayed edges Fabric to be 7 1/2 oz Twill, 65% Polyester, 35% combed cotton Colors are to be green and navy	4	EA	NO BID	$	$
0035	20092	JUMPSUIT WITH SNAP CLOSURE - MEDIUM	8	EA	NO BID	$	$
0036	20092	JUMPSUIT WITH SNAP CLOSURE - LARGE	12	EA	NO BID	$	$

LINE ITEM DETAIL

INMATE CLOTHING AND SUPPLIES

GALVESTON COUNTY, TEXAS

BID #: B122027
OPEN: 07/17/2012
2:00 PM

VENDOR ID

Item No.	Product Code	Description	Quantity	Units	Catalog #	Unit Price	Extended Price
0037	20092	JUMPSUIT WITH SNAP CLOSURE - XLARGE	18	EA	NO BID	$	$
0038	20092	JUMPSUIT WITH SNAP CLOSURE - XXLARGE	18	EA	NO BID	$	$
0039	20092	JUMPSUIT WITH SNAP CLOSURE - XXXLARGE	12	EA	NO BID	$	$
0040	20092	JUMPSUIT WITH SNAP CLOSURE - 4XLARGE	8	EA	NO BID	$	$
0041	20092	JUMPSUIT WITH SNAP CLOSURE - 5XLARGE	4	EA	NO BID	$	$
0042	20092	JUMPSUIT WITH SNAP CLOSURE - 6XLARGE	4	EA	NO BID	$	$
0043	20092	JUMPSUIT WITH SNAP CLOSURE - 7XLARGE	4	EA	NO BID	$	$
0044	20070	100% COTTON T-SHIRTS - MEDIUM - MENS	6	DZ	NO BID	$	$
0045	20070	100% COTTON T-SHIRTS - LARGE - MENS	12	DZ	NO BID	$	$

LINE ITEM DETAIL

INMATE CLOTHING AND SUPPLIES

GALVESTON COUNTY, TEXAS

BID #: B122027
OPEN: 07/17/2012
2:00 PM

VENDOR ID

Item No	Product Code	Description	Quantity	Units	Catalog #	Unit Price	Extended Price
0046	20070	100% COTTON T-SHIRTS - XLARGE - MENS	12	DZ	NO BID	$	$
0047	20070	100% COTTON T-SHIRT - XXLARGE - MENS	4	DZ	NO BID	$	$
0048	20070	100% COTTON T-SHIRTS - XXXLARGE - MENS	4	DZ	NO BID	$	$
0049	20010	SWEATPANTS - SMALL COLOR TO BE NAVY	8	EA	NO BID	$	$
0050	20010	SWEATPANTS - MEDIUM COLOR TO BE NAVY	12	EA	NO BID	$	$
0051	20010	SWEATPANTS - LARGE COLOR TO BE NAVY	12	EA	NO BID	$	$
0052	20010	SWEATPANTS - XLARGE COLOR TO BE NAVY	12	EA	NO BID	$	$
0053	20010	SWEATPANTS - XXLARGE COLOR TO BE NAVY	8	EA	NO BID	$	$

LINE ITEM DETAIL

INMATE CLOTHING AND SUPPLIES

GALVESTON COUNTY, TEXAS

BID #: B122027
OPEN: 07/17/2012
2:00 PM

VENDOR ID

Item No	Product Code	Description	Quantity	Units	Catalog #	Unit Price	Extended Price
0054	20010	SWEATPANTS - XXXLARGE COLOR TO BE NAVY	4	EA	NO BID	$	$
0055	20010	CREW NECK SWEATSHIRT - MEDIUM COLOR TO BE GRAY	8	EA	NO BID	$	$
0056	20010	CREW NECK SWEATSHIRT - LARGE COLOR TO BE GREY	12	EA	NO BID	$	$
0057	20010	CREW NECK SWEATSHIRT - XLARGE COLOR TO BE GREY	12	EA	NO BID	$	$
0058	20010	CREW NECK SWEATSHIRT - XXLARGE COLOR TO BE GREY	8	EA	NO BID	$	$
0059	20010	CREW NECK SWEATSHIRT - XXXLARGE COLOR TO BE GREY	4	EA	NO BID	$	$
0060	20010	CREW NECK SWEATSHIRT - MEDIUM ORANGE IN COLOR LOGO ON BACK "TLC"	10	EA	NO BID	$	$

LINE ITEM DETAIL

INMATE CLOTHING AND SUPPLIES

GALVESTON COUNTY, TEXAS

BID #: B122027
OPEN: 07/17/2012
2:00 PM

VENDOR ID

Item No	Product Code	Description	Quantity	Units	Catalog #	Unit Price	Extended Price
0061	20010	CREW NECK SWEATSHIRT - LARGE ORANGE IN COLOR LOGO ON BACK "TLC"	10	EA	NO BID	$	$
0062	20010	CREW NECK SWEATSHIRT - XLARGE ORANGE IN COLOR LOGO ON BACK "TLC"	5	EA	NO BID	$	$
0063	20010	CREW NECK SWEATSHIRT - XXLARGE ORANGE IN COLOR LOGO ON BACK "TLC"	3	EA	NO BID	$	$
0064	20010	JERSEY KNIT PRACTICE SHORTS - MEDIUM Triple sewn, soft cotton/poly blend jersey knit 6" inseam with covered elastic waistband No pockets or drawstrings Navy in color	24	EA	NO BID	$	$
0065	20010	JERSEY KNIT PRACTICE SHORTS - LARGE	24	EA	NO BID	$	$
0066	20010	JERSEY KNIT PRACTICE SHORTS - XLARGE	36	EA	NO BID	$	$

LINE ITEM DETAIL

INMATE CLOTHING AND SUPPLIES

GALVESTON COUNTY, TEXAS

BID #: B122027
OPEN. 07/17/2012
2:00 PM

VENDOR ID

Item No.	Product Code	Description	Quantity	Units	Catalog #	Unit Price	Extended Price
0067	20010	JERSEY KNIT PRACTICE SHORTS - 2XLARGE	24	EA	NO BID	$	$
0068	20010	JERSEY KNIT PRACTICE SHORTS - 3XLARGE	8	EA	NO BID	$	$
0069	20151	MENS SOCKS SOLID CREWS ONE SIZE FITS ALL 80% COTTON, 20% SYNTHETIC WHITE IN COLOR	50	DZ	NO BID	$	$
0070	20187	MENS BRIEFS POLYESTER/COTTON BLEND - MEDIUM - WHITE IN COLOR	12	DZ	NO BID	$	$
0071	20187	MENS BRIEFS POLYESTER/COTTON BLEND LARGE - WHITE IN COLOR	18	DZ	NO BID	$	$
0072	20187	MENS BRIEFS POLYESTER/COTTON BLEND XLARGE - WHITE IN COLOR	12	DZ	NO BID	$	$
0073	20187	MENS BRIEFS POLYESTER/COTTON BLEND 2XLARGE - WHITE IN COLOR	8	DZ	NO BID	$	$

LINE ITEM DETAIL

INMATE CLOTHING AND SUPPLIES

GALVESTON COUNTY, TEXAS

BID #: B122027
OPEN: 07/17/2012
2:00 PM

VENDOR ID

Item No	Product Code	Description	Quantity	Units	Catalog #	Unit Price	Extended Price
0074	20187	MENS BRIEFS POLYESTER/COTTON BLEND 3XLARGE - WHITE IN COLOR	4	DZ	NO BID	$	$
0075	20186	WOMENS PANTIES KNITTED ELASTIC WAIST & LEG BANDS SIZE 6 - WHITE IN COLOR	4	DZ	NO BID	$	$
0076	20186	WOMENS PANTIES KNITTED WAIST & LEG BANDS SIZE 7 - WHITE IN COLOR	8	DZ	NO BID	$	$
0077	20186	WOMENS PANTIES KNITTED WAIST & LEG BANDS SIZE 8 - WHITE IN COLOR	8	DZ	NO BID	$	$
0078	20186	WOMENS PANTIES KNITTED WAIST & LEG BANDS SIZE 9 - WHITE IN COLOR	4	DZ	NO BID	$	$
0079	20186	WOMENS PANTIES KNITTED ELASTIC WAIST & LEG BAND SIZE 10 - WHITE IN COLOR	4	DZ	NO BID	$	$

LINE ITEM DETAIL

INMATE CLOTHING AND SUPPLIES

GALVESTON COUNTY, TEXAS

BID #: B122027
OPEN: 07/17/2012
2:00 PM

VENDOR ID

Item No	Product Code	Description	Quantity	Units	Catalog #	Unit Price	Extended Price
0080	20186	SPORTS BRA - SMALL (32 A/B) Hookless pull-on style No metal or plastic Wide, non-slip straps, racer-style back. White in color	16	EA	NO BID	$	$
0081	20186	SPORTS BRA - MEDIUM (34 A/B)	48	EA	NO BID	$	$
0082	20186	SPORTS BRA - LARGE (36 A/B)	36	EA	NO BID	$	$
0083	20186	SPORTS BRA - XLARGE (38 A/B)	12	EA	NO BID	$	$
0084	20186	SPORTS BRA XXLARGE (40-42 B,C&D)	12	EA	NO BID	$	$
0085	80048	SLIP ON TENNIS SHOES - SIZE 5 Heavy weight navy blue canvas uppers White rubber around sole Insoles stitched in place USA made only	1200	PR	NO BID	$	$
0086	80048	SLIP ON TENNIS SHOES - SIZE 6	1200	PR	NO BID	$	$

LINE ITEM DETAIL

INMATE CLOTHING AND SUPPLIES

GALVESTON COUNTY, TEXAS

BID #: B122027
OPEN: 07/17/2012
2:00 PM

VENDOR ID

Item No	Product Code	Description	Quantity	Units	Catalog #	Unit Price	Extended Price
0087	80048	SLIP ON TENNIS SHOES - SIZE 7	1200	PR	NO BID	$	$
0088	80048	SLIP ON TENNIS SHOES - SIZE 8	1200	PR	NO BID	$	$
0089	80048	SLIP ON TENNIS SHOES - SIZE 9	1200	PR	NO BID	$	$
0090	80048	SLIP ON TENNIS SHOES - SIZE 10	1200	PR	NO BID	$	$
0091	80048	SLIP ON TENNIS SHOES - SIZE 11	1200	PR	NO BID	$	$
0092	80048	SLIP ON TENNIS SHOES - SIZE 12	1200	PR	NO BID	$	$
0093	80048	SLIP ON TENNIS SHOES - SIZE 13	1200	PR	NO BID	$	$
0094	80048	SLIP ON TENNIS SHOES - SIZE 14	1200	PR	NO BID	$	$
0095	80048	SLIP ON TENNIS SHOES - SIZE 15	1200	PR	NO BID	$	$

LINE ITEM DETAIL

INMATE CLOTHING AND SUPPLIES

GALVESTON COUNTY, TEXAS

BID #: B122027
OPEN. 07/17/2012
2:00 PM

VENDOR ID

tem No	Product Cod	Description	Quantity	Units	Catalog #	Unit Price	Extended Price
0096	80032	SLIP ON SANDALS SIZE SMALL Biochek Antimicrobial PVC Skid resistant sole to reduce risk of falls on wet floors Burgundy in color	1710	PR	NO BID	$	$
0097	80032	SLIP ON SANDALS SIZE MEDIUM	1710	PR	NO BID	$	$
0098	80032	SLIP ON SANDALS SIZE LARGE	1710	PR	NO BID	$	$
0099	80032	SLIP ON SANDALS SIZE XLARGE	1710	PR	NO BID	$	$
0100	80032	SLIP ON SANDALS SIZE XXLARGE	1710	PR	NO BID	$	$
0101	80032	SLIP ON SANDALS SIZE 3XLARGE	1710	PR	NO BID	$	$
0102	80032	SLIP ON SANDALS SIZE SIZE 5-6 (SMALL)	1710	PR	NO BID	$	$
0103	80032	SLIP ON SANDALS SIZE 7-8 (MEDIUM)	1710	PR	NO BID	$	$

LINE ITEM DETAIL

INMATE CLOTHING AND SUPPLIES

GALVESTON COUNTY, TEXAS

BID #. B122027
OPEN: 07/17/2012
2:00 PM

VENDOR ID

Item No.	Product Code	Description	Quantity	Units	Catalog #	Unit Price	Extended Price
0104	80032	SLIP ON SANDALS SIZE 9-10 (LARGE)	1710	PR	NO BID	$	$
0105	80032	SLIP ON SANDALS SIZE 11-12 (XLARGE)	1710	PR	NO BID	$	$
0106	80032	SLIP ON SANDALS SIZE 13-14 (XXLARGE)	1710	PR	NO BID	$	$
0107	95405	TOWELS HEAVY OR PREMIUM WEIGHT 100% COTTON MINIMUM 5 5 LBS PER DOZEN, WHITE IN COLOR IMPORTED OR DOMESTIC PRE-PACKAGED 25 DOZEN PER CASE 20" X 40" IN SIZE	600	DZ	204055BR	$ $9 25	$ 5550 00
0108	85092	WASHCLOTHS HEAVY OR PREMIUM WEIGHT COTTON 12" X 12" WHITE BATH WASHCLOTH	100	DZ	1212-16W	$ 2 35	$ 235 00
0109	61586	VINYL ID WASHABLE TAGS, 1000/ROLL	2	ROLL	no bid	$	$
0110	51080	NETS, TIE CORD LAUNDRY 24" X 36"	12	DZ	NO BID	$	$
0111	20044	BDU TROUSERS - SMALL/REGULAR Military inspired construction, six (6) pockets, four (4) with button flaps Adjustable waist tab with four (4)	6	EA	NO BID	$	$

LINE ITEM DETAIL

INMATE CLOTHING AND SUPPLIES

GALVESTON COUNTY, TEXAS

BID #: B122027
OPEN: 07/17/2012
2:00 PM

VENDOR ID

Item No.	Product Code	Description	Quantity	Units	Catalog #	Unit Price	Extended Price
		bartacks Zipper fly with snap closure 65/35 Polyester/Cotton Ripstop Color to be Navy					
0112	20044	BDU TROUSER - MEDIUM/REGULAR Color to be Navy	15	EA	NO BID	$	$
0113	20044	BDU TROUSER - LARGE/REGULAR Color to be Navy	15	EA	NO BID	$	$
0114	20044	BDU TROUSER - XLARGE/REGULAR Color to be Navy	6	EA	NO BID	$	$
0115	20044	BDU TROUSER - 2XLARGE/REGULAR Color to be Navy	4	EA	NO BID	$	$

Extended Price Total of all Iten $ 41,442 04

BID #. B122027
OPEN: 07/17/2012
2 00 PM

INVITATION TO BID
INMATE CLOTHING AND SUPPLIES
GALVESTON COUNTY, TEXAS

Sealed bids in **sets of five (5), one (1) original and four (4) copies** will be received in the office of the County Purchasing Agent until **2:00 PM** on **07/17/2012** and opened immediately in that office in the presence of the County Auditor and the Purchasing Agent Sealed bids are to be delivered to the County Purchasing Agent at the Galveston County Courthouse, 722 Moody Avenue (21st Street), Fifth (5th) Floor, Galveston, Texas 77550 Any bid received after **2:00 PM** on the date specified will be returned unopened

All bids must be marked on the outside of the envelope

Bid #: B122027
INMATE CLOTHING AND SUPPLIES

Bidders name, return address and the enclosed label should be prominently displayed on the envelope Pricing will be lump sum or as noted on bid sheet

Specifications can be obtained on application at the office of the County Purchasing Agent, located in the Galveston County Courthouse, 722 Moody Avenue (21st Street), Fifth (5th) Floor, Galveston, Texas

Bids will be either lump sum or unit prices as shown on the bid sheet, if applicable The net price will be delivered to Galveston County, including all freight or shipping charges The County is tax exempt and no taxes should be included in your bid

Upon satisfaction of contractual terms (e g , goods delivered in promised condition, services rendered as agreed, etc), vendor is to be paid via Galveston County's normal accounts payable process

Commissioners' Court reserves the right to waive any informality and to reject any and all bids and to accept the bid or bids which in its opinion, is most advantageous to the County

Rufus G Crowder, CPPB
Purchasing Agent
Galveston County

GENERAL PROVISIONS
INMATE CLOTHING AND SUPPLIES
GALVESTON COUNTY, TEXAS

1 BID PACKAGE

The invitation to bid, general and special provisions, drawings, specifications/line item details, contract documents and the bid sheet are all considered part of this bid package Bids must be submitted in ***sets of five (5), one (1) original and four (4) copies*** *on the forms provided by the County, including the bid sheet completed in its entirety and signed by an authorized representative by original signature Failure to complete and sign the bid sheet/contract page(s) may disqualify the bid from being considered by Commissioners' Court Any individual signing on behalf of the bidder expressly affirms that he or she is duly authorized to tender this bid and to sign the bid sheet/contract under the terms and conditions in this bid Bidder further understands that the signing of the contract shall be of no effect unless subsequently awarded and the contract properly executed by Commissioners Court All figures must be written in ink or typed Figures written in pencil or with erasures are not acceptable However, mistakes may be crossed out, corrections inserted, and initialed in ink by the individual signing the bid If there are discrepancies between unit prices quoted and extensions, the unit price will prevail Each bidder is required to thoroughly review this entire bid packet to familiarize themselves with the bid procedures, the plans and specifications for the requested work as well as the terms, and conditions of the contract the successful bidder will execute with the County*

2. COMPETITIVENESS AND INTEGRITY

To prevent biased evaluations and to preserve the competitiveness and integrity of such acquisition efforts, bidders are to direct all communications regarding this bid to the Galveston County Purchasing Agent, unless otherwise specifically noted

Do not contact the requesting department. Attempts by offering firms to circumvent this requirement will be viewed negatively and may result in rejection of the offer of the firm found to be in non-compliance

All questions regarding this Request for Bid must be submitted in writing to

Rufus G Crowder, CPPB
Galveston County Purchasing Agent
722 Moody, Fifth (5th) Floor
Galveston, Texas 77550
Fax (409) 621-7987
E-mail rufus.crowder@co.galveston.tx.us

An authorized person from the submitting firm must sign all bids This signature acknowledges that the bidder has read the bid documents thoroughly before submitting a bid and will fulfill the obligations in accordance to the terms, conditions, and specifications

Please carefully review this Invitation to Bid It provides specific information necessary to aid participating firms in formulating a thorough response

3. TIME FOR RECEIVING BIDS

Bids received prior to the submission deadline will be maintained unopened until the specified time for opening If the bidder fails to identify the Bid Number on the outside of the envelope as required, the Purchasing Agent will open the envelope for the sole purpose of identifying the bid number for which the submission was made The envelope will then be resealed No liability will attach to a County office or employee for the premature opening of a bid If you do not submit a bid, return this Invitation to Bid and state reason, otherwise your name may be removed from our mailing list

4 BID OPENING

The names of the bidders and the pricing will be read aloud at the bid opening Sealed bids will be received in the office of the County Purchasing Agent and opened immediately in that office in the presence of the County Auditor and the Purchasing Agent No bid may be withdrawn for a period of sixty (60) calendar days of the bid opening date

GENERAL PROVISIONS
INMATE CLOTHING AND SUPPLIES
GALVESTON COUNTY, TEXAS

5 **REJECTION OF BIDS**
The County, acting through its Commissioners' Court reserves the right to (1) reject any and all bids and waive any informality in the bids received, (2) disregard the bid of any bidder determined to be non responsive to the provisions contained herein

6. **RESTRICTIVE OR AMBIGUOUS SPECIFICATIONS**
It is the responsibility of the prospective bidder to review the entire invitation to bid packet and to notify the Purchasing Department if the specifications are formulated in a manner that would restrict competition or appear ambiguous Any such protest or question(s) regarding the specifications or bid procedures must be received in the Purchasing Department not less than seventy-two (72) hours prior to the time set for bid opening Vendors are to bid as specified herein or bid an approved equal The mention of any brand name in the specifications is not intended to be restrictive, but is intended to describe the general features and requirements (or equivalent) that Galveston County is seeking

7 **SUBSTITUTES**
It is not the County's intent to discriminate against any materials of equal merit to those specified, however, should the bidder desire to use any substitutions, prior written approval shall be obtained from the County Purchasing Agent sufficiently in advance in order that an addendum might be issued

8. **EXCEPTIONS TO BID**
The bidder will list on a separate sheet of paper any exceptions to the conditions of the bid This sheet will be labeled, "Exceptions to Bid Conditions", and will be attached to the bid If no exceptions are stated, it will be understood that all general and specific conditions will be complied with, without exception

9. **PRICING**
Bids will be either lump sum or unit prices as shown on the bid sheet The net price will be delivered to Galveston County, including all freight or shipping charges The County is tax exempt and no taxes should be included in your bid

Cash discount must be shown on bid, otherwise prices will be considered net Unless prices and all information requested are complete, bid may be disregarded and given no consideration

In case of default by the contractor, the County of Galveston may procure the articles or services from other sources and may deduct from any monies due, or that may thereafter become due to the contractor, the difference between the price named in the contract of purchase order and the actual cost thereof to the County of Galveston Prices paid by the County of Galveston shall be considered the prevailing market price at the time such purchase is made Periods or performance may be extended if the facts as to the cause of delay justify such extension in the opinion of the Purchasing Agent and the Commissioners' Court

10 **PROCUREMENT CARD**
The County of Galveston participates in a Procurement Card (P-Card) program that allows payments made to the vendor by credit card This method normally results in substantially faster bill payments sometimes within three (3) to five (5) days of the actual transaction date If your company will accept payment via credit card (Visa MasterCard) please notate this in you bid submittal

11 **TAX EXEMPTION**
Pursuant to Section 151 309 of the Texas Tax Code Galveston County qualifies for exemption from sales excise and use taxes imposed under the Limited Sales, Excise, and Use Tax Act, which is codified at Chapter 151 of the Texas Tax Code In accordance with Section 151 309 a taxable item sold, leased, or rented to or stored, used, or consumed by the County is exempt from the taxes imposed under Chapter 151 Section 151 311 of the Texas Tax Code lists its requirements for tax exemptions on taxable items incorporated into or used for the improvement of realty of an exempt entity Section 151 3111 lists its requirements for tax exemptions on certain services Contractor is cautioned that this

GENERAL PROVISIONS
INMATE CLOTHING AND SUPPLIES
GALVESTON COUNTY, TEXAS

RFP provision simply highlights some statutory qualifying exemptions from the sale and use taxes imposed under Chapter 151 If Contractor believes all or a portion of its costs are exempt from taxes imposed under Chapter 151 of the Texas Tax Code, it may request a certificate of tax exemption by submitting a written request for such to the County Purchasing Agent Additionally, information regarding eligibility for exemption from taxes imposed under Chapter 151 may be obtained through the Office of the State of Texas Comptroller of Public Accounts, whose website is http www window state tx us

12. PASS THROUGH COST ADJUSTMENTS

Except in instances of extreme extenuating circumstances Vendor prices shall remain firm throughout the Contract period and any renewals Examples of extreme extenuating circumstances include such situations as a nation wide rail strike, oil shortage, or oil embargos

In extreme extenuating circumstances Vendors may be allowed to temporarily "pass through" additional costs they are forced to incur through no fault of their own A request for a pass through cost increase will not be considered unless a Vendor's cost for his product exceeds 10% over the original cost for the product Also, the increase in cost must be nationwide and consistent for a minimum period of sixty (60) days If a Vendor thinks he will be asking for a pass through cost adjustment during the term of his contract the original cost of his product to him must be stated in Vendor's original bid

A request for a pass through cost does not guarantee that one will be granted Vendors must submit such information on each request as is required by the County Purchasing Agent The County Purchasing Agent will review each request on a case by case basis and determine the appropriateness of each request as well as amount and duration of increase Vendors will not be permitted any additional compensation for mark-ups or profits based on the increase in price Rather, such additional compensation will be limited to the actual increase in original cost to the Vendor as such increase is reflected by the original cost stated in the bid But in no event will the amount of additional compensation exceed 25% increase in

Vendor's original cost for his product as such cost is reflected in Vendor's original bid or the duration exceed a period of sixty (60) days In addition, should, during the period of the pass through, cost return to normal or decrease to below pre pass through prices, appropriate downward adjustments will be made No more than one pass through adjustment will be permitted per year

13 MODIFICATION OF BIDS

A bidder may modify a bid by letter at any time prior to the submission deadline for receipt of bids Modification requests must be received prior to the submission deadline Modifications made before opening time must be initialed by bidder guaranteeing authenticity Bids may not be amended or altered after the official opening with the single exception that any product literature and/or supporting data required by the actual specifications if any, will be accepted at any time prior to the Commissioners' Court consideration of same

14 AWARD OF BIDS

The award will be made to the bidder who is determined to be the lowest bidder demonstrating the best value and ability to fulfill the requirements of the bid The prices proposed will be considered firm and cannot be altered after the submission deadline

The criteria utilized for determining responsibility of bidder(s) includes, but is not limited to, the bidder's experience, skill, ability, business judgment, financial capacity, integrity, honesty, possession of the necessary facilities or equipment, previous performance, reputation, promptness, and any other factor deemed relevant by the County The bidder shall furnish any information requested by the County in order for the County to determine whether a bidder is responsible

In determining and evaluating the best bid, the pricing may not necessarily be controlling, but quality, equality, efficiency, utility general terms, delivery, suitability of the service offered, and the reputation of the service in general use will also be considered with any other relevant items The Commissioners' Court shall be the sole judge in the determination of these matters

GENERAL PROVISIONS
INMATE CLOTHING AND SUPPLIES
GALVESTON COUNTY, TEXAS

Each bidder, by submitting a bid, agrees that if their bid is accepted by the Commissioners' Court, such bidder will furnish all items and services upon which prices have been tendered and upon the terms and conditions in this bid and contract

The contractor shall commence work only after the transmittal of a fully executed purchase order, or contract and after receiving written notification to proceed from Galveston County The contractor will perform all services indicated in the bid in compliance with this contract

Neither department heads nor elected officials are authorized to sign any binding contracts or agreements prior to being properly placed on the Commissioners' Court agenda and approved in open court Department heads and other elected officials are not authorized to enter into any type of agreement or contract on behalf of Galveston County Only the Commissioners' Court, acting as a body, may enter into a contract on behalf of Galveston County Additionally, department heads and other elected officials are not authorized to agree to any type of supplemental agreements or contracts for goods or services Supplemental agreements are subject to review by the Galveston County Legal Department prior to being signed by the County's authorized representative

The County of Galveston reserves the right to accept bids on individual items listed, or group items, or on the bid as a whole, to reject any and all bids, to waive any informality in the bids, and to accept the bid that appears to be in the best interest of the County

Notice of contract award will be made within ninety (90) days of opening of bids to the lowest responsive and responsible contractor, whose bid complies with all the requirements in this Invitation to Bid unless special consideration is granted by the Commissioners' Court

Contractor shall submit to the County, for approval, within ten (10) days from notice of contract award, all Certificates of Insurance evidencing the required coverage as described under insurance in the schedule of the Invitation to Bid, item 29, page 7 Proof of Insurance

The contractor shall not commence work under these terms and conditions of the contract until all applicable Certificates of Insurance, Performance and Payment Bonds, and Irrevocable Letter of Credit (if required) have been approved by the County of Galveston and he/she has received notice to proceed in writing and an executed copy of the contract from the County of Galveston Purchasing Agent

15. RESULTANT CONTRACT

The resultant contract if applicable shall become effective upon the Commissioners' Court execution of the same The contract documents shall consist of the contract, the general and special provisions, the drawings, bid package, any addenda issued, and any change orders issued during the work If applicable to the attached bid, bidder must sign three (3) original contracts and return with their bid submittal

16. CONTRACT TERM

The term of the resultant contract will begin on the date of execution by the Commissioners' Court and will terminate on the date specified in the resultant contract unless terminated earlier as herein set forth

17 TERMINATION FOR DEFAULT

Failure of either party in the performance of any of the provisions of this contract shall constitute a breach of contract, in which case, either party may require corrective action within ten (10) days from date of receipt of written notice *citing the exact nature of such breach* Failure of the party being notified to take corrective action within the prescribed ten (10) days, or failure to provide written reply of why no breach has occurred shall constitute a Default of Contract

GENERAL PROVISIONS
INMATE CLOTHING AND SUPPLIES
GALVESTON COUNTY, TEXAS

All notices relating to default by Bidder of the provisions of the contract shall be issued by County by its Legal Department, and all replies shall be made in writing to the Galveston County Legal Department Notices issued by or issued to anyone other than the Galveston County Legal Department shall be null and void and shall be considered as not having been issued or received

Galveston County reserves the right to enforce the performance of this contract in any manner prescribed by law in the event of breach or default of this contract, and may contract with another party, with or without solicitation of bids or bids or further negotiations At a minimum, bidder shall be required to pay any difference in service or materials, should it become necessary to contract with another source, plus reasonable administrative costs and attorney fees

In the event of Termination for Default, Galveston County, its agents or representatives shall not be liable for loss of any profits anticipated to be made by bidder

No waiver by either party of any event of default under this agreement shall operate as a waiver of any subsequent default under the terms of this agreement

County reserves the right to terminate this contract immediately in the event bidder

- Fails to meet delivery or completion schedules
- Fails to otherwise perform in accordance with the accepted bid and the contract

18 TERMINATION FOR CONVENIENCE

County may terminate this contract upon at least thirty (30) days prior written notice for its' convenience or for any reason deemed by the County to serve the public interest County may terminate this contract upon thirty (30) days prior written notice for any reason resulting from any governmental law, order, ordinance, regulations or court order In no event shall County be liable for loss of any profits anticipated to be made hereunder by bidder should this contract be terminated early

19 FORCE MAJEURE

If by reason of Force Majeure either Party shall be rendered unable, wholly or in part, to carry out its responsibilities under this contract by any occurrence by reason of Force Majeure, then the Party unable to carry out its responsibility shall give the other Party notice and full particulars of such Force Majeure in writing within a reasonable time after the occurrence of the event, and such notice shall suspend the Party's responsibility for the continuance of the Forced Majeure claimed, but for no longer period

Force Majeure means acts of God, floods, hurricanes, tropical storms, tornadoes, earthquakes, or other natural disasters acts of a public enemy, acts of terrorism, sovereign conduct riots, civil commotion, strikes or lockouts, and other causes that are not occasioned by either Party's conduct which by the exercise of due diligence the Party is unable to overcome and which substantially interferes with operations

20. ESTIMATED QUANTITIES

Any reference to quantities shown in the Invitation to Bid are an estimate only Since the exact quantities cannot be predetermined the County reserves the right to adjust quantities as deemed necessary to meet its' requirements

21. CONTRACTOR INVESTIGATION

Before submitting a bid, each contractor shall make all investigations and examinations necessary to ascertain all site conditions and requirements affecting the full performance of the contract and to verify any representations made by the County upon which the contractor will rely If the contractor receives an award as a result of its bid submission failure to have made such investigations and examinations will in no way relieve the contractor from its obligation to comply in every detail with all provisions and requirements of the contract nor will a plea of ignorance of such conditions and requirements be accepted as a basis for any claim whatsoever by the contractor for additional compensation

GENERAL PROVISIONS
INMATE CLOTHING AND SUPPLIES
GALVESTON COUNTY, TEXAS

22. NO COMMITMENT BY COUNTY OF GALVESTON

This Invitation to Bid does not commit the County of Galveston to award any costs or pay any costs, or to award any contract, or to pay any costs associated with or incurred in the preparation of a bid to this request, or to procure or contract for services or supplies

23. SINGLE BID RESPONSE

If only one bid is received in response to the Invitation to Bid, a detailed cost bid may be requested of the single contractor A cost/price analysis and evaluation and/or audit may be performed of the cost bid in order to determine if the price is fair and reasonable

24. REJECTION/DISQUALIFICATION OF BIDS

Galveston County reserves the right to reject any or all bids in whole or in part received by reason of this bid package and may discontinue its efforts for any reason under this bid package at any time prior to actual execution of the contract by the County Bidders may be disqualified and rejection of bids may be recommended to the Commissioners' Court for any of (but not limited to) the following causes

A Failure to use the bid form furnished by the County, if applicable
B Lack of signature by an authorized representative that can legally bind the company on the bid form
C Failure to properly complete the bid
D Bids that do not meet the mandatory requirements
E Evidence of collusion among bidders

25. CHANGES IN SPECIFICATIONS

If it becomes necessary to revise any part of this bid, a written notice of such revision will be provided to all bidders in the form of addenda The County is not bound by any oral representations, clarifications, or changes made in the written specifications by the County's employees unless such clarification or change is provided to bidders in a written addendum from the Purchasing Agent

The County of Galveston reserves the right to revise or amend the specifications up to the time set for opening of bids Such revisions and amendments, if any, shall be announced by amendments to the solicitation Copies of such amendments shall be furnished to all prospective contractors Prospective contractors are defined as those contractors listed on the County's Invitation to Bid list for this material/service or who have obtained his document subsequent to the advertisement If revisions and amendments require changes in quantities or prices proposed, or both, the date set for opening of bids may be postponed by such number of days as in the opinion of the County shall enable contractors to revise their bids In any case, the bid opening shall be at least five working days after the last amendment and the amendment shall include an announcement of the new date if applicable, for the opening of bids

26. BID DISCLOSURES

The names of those who submitted bids will not be made public information until after an award is made by Commissioners Court No price or staffing information will be released Bidders are requested to withhold all inquiries regarding their bid or other submissions until after an award is made No communication is to be had with any County employee, other than the Purchasing Agent, regarding whether a bid was received Violations of this provision may result in the rejection of a bid

27 PROTEST

Any actual or prospective bidder who is allegedly aggrieved in connection with the solicitation or award of bid may protest The protest will be submitted in writing to the Purchasing Agent within seven (7) days after such aggrieved person knows of, or should have known of the facts giving rise thereto If the protest is not resolved by mutual agreement, the Purchasing Agent will promptly issue a decision in writing to the protestant If the protestant wishes to appeal the decision rendered by the Purchasing Agent such appeal must be made to the Commissioners' Court through the Purchasing Agent The decision of the Court will be final The Court need not consider protests unless this procedure is followed

GENERAL PROVISIONS
INMATE CLOTHING AND SUPPLIES
GALVESTON COUNTY, TEXAS

28. **WITHDRAWAL OF BID**
Bidders may request withdrawal of a sealed bid prior to the scheduled bid opening time provided the request for withdrawal is submitted to the Purchasing Agent in writing No bids may be withdrawn for a period of sixty (60) calendar days after opening of the bids

29. **INDEMNIFICATION**
The contractor shall agree to assume all risks and responsibility for, and agrees to indemnify, defend, and save harmless, the County of Galveston, its elected and appointed officials and department heads, and its agents and employees from and against all claims, demands, suits, actions, recoveries, judgments, and costs and expenses including reasonable attorney's fees for the defense thereof in connection therewith on account of the loss of life, property or injury or damage to the person which shall arise from contractor's operations under this contract, its use of County facilities and/or equipment or from any other breach on the part of the contractor, its employees, agents or any person(s) in or about the County's facilities with the expressed or implied consent of the County. Contractor shall pay any judgment with cost which may be obtained against Galveston County resulting from contractor's operations under this contract.

Contractor agrees to indemnify and hold the County harmless from all claims of subcontractors, laborers incurred in the performance of this contract. Contractor shall furnish satisfactory evidence that all obligations of this nature herein above designated have been paid, discharged or waived. If Contractor fails to do so, then the County reserves the right to pay unpaid bills of which County has written notice direct and withhold from Contractor's unpaid compensation a sum of money reasonably sufficient to liquidate any and all such lawful claims.

30 **PROOF OF INSURANCE**
Successful bidder agrees to keep in full force and effect, a policy of public liability and property damage insurance issued by a casualty company authorized to do business in the State of Texas, and in standard form approved by the Board of Insurance Commissioners' of the State of Texas, with coverage provision insuring the public from any loss or damage that may arise to any person or property by reason of services rendered by successful bidder and providing that the amount by reason of services limits of not less than the following sums

A For damages arising out of bodily injury to or death of one person in any one accident –
ONE HUNDRED THOUSAND AND NO/100 ($100,000 00) DOLLARS
B For damages arising out of bodily injury to or death of two or more persons in any one accident –
THREE HUNDRED THOUSAND AND NO/100 ($300,000 00) DOLLARS
C For any injury to or destruction of property in any one accident –
ONE HUNDRED THOUSAND AND NO/100 ($100,000 00) DOLLARS

Successful bidder shall carry in full force Workers' Compensation Insurance Policy(ies), if there is more than one employee, for all employees, including but not limited to full time, part time, and emergency employees employed by the successful bidder Current insurance Certificates certifying that such policies as specified above are in full force and effect shall be furnished by successful bidder to the County

Galveston County shall be listed as the additional insured on policy certificates and shall be notified of any changes to the policy during the contractual period.

31 **CONFLICT OF INTEREST DISCLOSURE REPORTING**
Proposer may be required under Chapter 176 of the Texas Local Government Code to complete and file a conflict of interest questionnaire (CIQ Form) If so the completed CIQ Form must be filed with the County Clerk of Galveston County, Texas

GENERAL PROVISIONS
INMATE CLOTHING AND SUPPLIES
GALVESTON COUNTY, TEXAS

If Proposer has an employment or other business relationship with an officer of Galveston County or with a family member of an officer of Galveston County that results in the officer or family member of the officer receiving taxable income that exceeds $2,500 00 during the preceding 12-month period, then Proposer **MUST** complete a CIQ Form and file the original of the CIQ Form with the County Clerk of Galveston County

If Proposer has given an officer of Galveston County or a family member of an officer of Galveston County one or more gifts with an aggregate value of more than $250 00 during the preceding 12-months, then Proposer **MUST** complete a CIQ Form and file the original of the CIQ Form with the County Clerk of Galveston County

The Galveston County Clerk has offices at the following locations

Galveston County Clerk
Galveston County Justice Center, Suite 2001
600 59th Street
Galveston, Texas 77551

Galveston County Clerk
North County Annex, 1st Floor
174 Calder Road
League City, Texas 77573

Again if Proposer is required to file a CIQ Form, the original completed form is filed with the Galveston County Clerk (not the Purchasing Agent)

For Proposer's convenience, a blank CIQ Form is enclosed with this proposal Blank CIQ Forms may also be obtained by visiting the Galveston County Clerk's website and/or the Purchasing Agent's website – both of these web sites are linked to the Galveston County homepage, at http://www.co.galveston.tx.us

As well, blank CIQ Forms may be obtained by visiting the Texas Ethics Commission website, specifically at http://www.ethics.state.tx.us/whatsnew/conflict_forms.htm

Chapter 176 specifies deadlines for the filing of CIQ Forms (both initial filings and updated filings)

It is Proposer's sole responsibility to file a true and complete CIQ Form with the Galveston County Clerk if Proposer is required to file by the requirements of Chapter 176 Proposer is advised that it is an offense to fail to comply with the disclosure reporting requirements dictated under Chapter 176 of the Texas Local Government Code

If you have questions about compliance with Chapter 176, please consult your own legal counsel Compliance is the individual responsibility of each person, business, and agent who is subject to Chapter 176 of the Texas Local Government Code

32. ENTIRETY OF AGREEMENT AND MODIFICATION

This contract contains the entire agreement between the parties Any prior agreement, promise, negotiation or representation not expressly set forth in this contract has no force or effect Any subsequent modification to this contract must be in writing, signed by both parties

An official representative, employee, or agent of the County does not have the authority to modify or amend this contract except pursuant to specific authority to do so granted by the Galveston County Commissioners' Court

GENERAL PROVISIONS
INMATE CLOTHING AND SUPPLIES
GALVESTON COUNTY, TEXAS

33. NON-COLLUSION AFFIDAVIT

The contractor declares, by signing and submitting a bid, that the bid is not made in the interest of, or on behalf of, any undisclosed person, partnership, company, association, organization, or corporation, that the bid is genuine and not collusive or sham, that the contractor has not directly or indirectly induced or solicited another contractor to put in a false or sham bid, and has not directly or indirectly colluded, conspired, connived, or agreed with any contractor or anyone else to put in a sham bid, of that anyone shall refrain from bidding, that the contractor has not in any manner, directly or indirectly, sought by agreement, communications, or conference with anyone to fix the bid price of the contractor of any other bidder, or to fix any overhead, profit or cost element of the bid price, or of that of any other contractor, or to secure any advantage against the public body awarding the contract of anyone interested in the proposed contract, that all statements contained in the bid are true, and further, that the contractor has not, directly or indirectly, submitted his or her bid price or any breakdown thereof, or the contents thereof, or divulged information or data relative thereto, or paid, and will not pay, any fee to any cooperation, partnership, company association, organization, bid depository, or to any member or agent thereof to effectuate a collusive or sham bid

No negotiations, decisions, or actions shall be initiated by any company as a result of any result of any verbal discussion with any County employee prior to the opening of responses to this Invitation to Bid

No officer or employee of the County of Galveston, and no other public or elected official, or employee, who may exercise any function or responsibilities in the review or approval of this undertaking shall have any personal or financial interest, direct or indirect, in any contract or negotiation process thereof The above compliance request will be part of all County of Galveston contracts for this service

34 PROCUREMENT ETHICS

Galveston County is committed to the highest ethical standards Therefore, it is a serious breach of the public trust to subvert the public purchasing process by directing purchases to certain favored vendors, or to tamper with the competitive bidding process, whether it's done for kickbacks, friendship or any other reason Since misuse of the purchasing power of a local government carries criminal penalties, and many such misuses are from a lack of clear guidelines about what constitutes an abuse of office, the Code of Ethics outlined below must be strictly followed

Galveston County also requires ethical conduct from those who do business with the county

CODE OF ETHICS – Statement of Purchasing Policy

Public employment is a public trust It is the policy of Galveston County to promote and balance the objective of protecting the County's integrity and the objective of facilitating the recruitment and retention of personnel needed by Galveston County Such policy is implemented by prescribing essential standards of ethical conduct without creating unnecessary obstacles to entering public office

Public employees must discharge their duties impartially so as to assure fair competitive access to governmental procurement by responsible contractors Moreover, they should conduct themselves in such a manner as to foster public confidence in the integrity of the Galveston County procurement organization

To achieve this purpose, it is essential that those doing business with Galveston County also observe the ethical standards prescribed herein

General Ethical Standards

It shall be a breach of ethics to attempt to realize personal gain through public employment with Galveston County by any conduct inconsistent with the proper discharge of the employee's duties

It shall be a breach of ethics to attempt to influence any public employee of Galveston County to breach the standards of ethical conduct set forth in this code

GENERAL PROVISIONS
INMATE CLOTHING AND SUPPLIES
GALVESTON COUNTY, TEXAS

It shall be a breach of ethics for any employee of Galveston County to participate directly or indirectly in a procurement when the employee knows that

- The employee or any member of the employee's immediate family, has a financial interest pertaining to the procurement
- A business or organization in which the employee, or any member of the employee's immediate family, has a financial interest pertaining to the procurement
- Any other person, business or organization with which the employee or any member of the employee's immediate family is negotiating or has an arrangement concerning prospective employment is involved in the procurement

Gratuities
It shall be a breach of ethics to offer, give or agree to give any employee of Galveston County, or for any employee or former employee of Galveston County to solicit, demand, accept or agree to accept from another person, a gratuity or an offer of employment in connection with any decision, approval, disapproval, recommendation, preparation of any part of a program requirement or purchase request, influencing the content of any specification or procurement standard, rendering of advice, investigation, auditing, or in any other advisory capacity in any program requirement or a contract or subcontract, or to any solicitation or bid therefore pending before this government

Kickbacks
It shall be a breach of ethics for any payment, gratuity or offer of employment to be made by or on behalf of a subcontractor under a contract to the prime contractor or higher tier subcontractor for any contract for Galveston County, or any person associated therewith, as an inducement for the award of a subcontract or order

Contract Clause
The prohibition against gratuities and kickbacks prescribed above shall be conspicuously set forth in every contract and solicitation by Galveston County

Confidential Information
It shall be a breach of ethics for any employee or former employee of Galveston County to knowingly use confidential information for actual or anticipated personal gain, or for the actual or anticipated gain of any person

35 **OPEN RECORDS**
Galveston County is required to adhere to the provisions of the Texas Public Information Act All information, documentation and other material submitted by vendor in response to any solicitations or under any resulting contract thereof may be subject to public disclosure under the Texas Public Information Act (TX Gov't Code, Chapter 552) Vendors are hereby notified that Galveston County strictly adheres to this statute and the interpretations thereof rendered by the Courts and/or Texas Attorney General's office Vendor shall be deemed to have knowledge of this law and how to protect their interests under it Exceptions to disclosure of information as provided by this statute are intended to protect legitimate interests of the County or vendor, and are not intended to serve as a means to withhold or delay disclosure of information not covered by these exceptions

If vendor considers any submitted information to be proprietary in nature, protected by trade secrets, or otherwise confidential, said material should be clearly marked and conspicuously notated as such. Failure to do so shall not place any burden on the County of Galveston for the release of any material not abiding by this provision.

GENERAL PROVISIONS
INMATE CLOTHING AND SUPPLIES
GALVESTON COUNTY, TEXAS

36. NOTICE

Any notice required or permitted between the parties under this contract must be in writing and shall be delivered in person or mailed, certified mail, return receipt requested, or may be transmitted by fax as follows

To the County at

Hon Mark A Henry, County Judge
722 Moody
Second (2nd) Floor
Galveston, Texas 77550
Fax (409) 765-2653

And to

Rufus G Crowder, CPPB
Purchasing Agent
722 Moody, Fifth (5th) Floor
Galveston, Texas 77550
Fax (409) 621-7987

Harvey Bazaman
Director of County Legal
722 Moody, Fifth (5th) Floor
Galveston, Texas 77550
Fax (409) 770-5560

SPECIAL PROVISIONS
INMATE CLOTHING AND SUPPLIES
GALVESTON COUNTY, TEXAS

The County of Galveston is seeking a vendor or vendors to supply inmate clothing and supplies for various departments within the County

Awards will be based on total sum price In the case of errors in extensions the unit price will prevail

No taxes are to be added as Galveston County is exempt by Statute

TERM OF CONTRACT
The term of contract shall be one (1) year from date of acceptance and approval of bid by the Galveston Commissioners Court with an option to continue for an additional two (2) one (1) year periods if mutually agreeable

If during the life of the contract the successful bidder's net prices to other customers for inmate clothing and supplies awarded therein are reduced below the contracted price, it is understood and agreed that the benefits of such reduction shall be extended to Galveston County

A price re-determination may be considered by Galveston County only at the anniversary date of the contract and shall be substantiated in writing (i e Manufacturer's direct cost, postage rates, Railroad Commission Rates, etc) The bidder's past experience of honoring contracts at the bid price will be an important consideration in the evaluation of the lowest and bet bid Galveston County reserves the right to accept or reject any and all of the price re-determinations as it deems to be in the best interest of the County

The quantities as shown on the specification and bid sheet are approximate Galveston County does not guarantee any minimum or maximum purchase and will pay for those items actually ordered and delivered Any mention of name brands is strictly for reference and vendor is to supply equivalent product

SPECIAL NOTE: All vendors shall complete the Line Item Detail Sheets, (line items numbered 1 through 115) *for all items to be considered for award.* In addition, all vendors are to complete two (2) Bid Forms (Section Total Bid Form and Company Information Bid Form) included in this solicitation package.

This bid is divided into eight (8) sections

Section I Bedding line items 1 6

Section II – Work shirts and Pants line items 7- 43

Section III – Recreational Clothing line items 44 – 69

Section IV – Undergarments line items 70 - 84

Section V – Footwear, line items 85 106

Section VI – Towels and Linens line items 107 - 108

Section VII – Laundry Items and Accessories line items 109 – 110

Section VIII – BDU Trousers line items 111 - 115

Separate awards may be made to each section however all sections may be awarded to one (1) vendor

Successful bidder will maintain adequate stock in order to avoid back orders

SPECIAL PROVISIONS
INMATE CLOTHING AND SUPPLIES
GALVESTON COUNTY, TEXAS

Work shirts and work pants will be manufactured so that pants and shirt color shall match

Galveston County will place orders on an as needed basis and each order must be accompanied by a purchase order number This number **MUST** be shown on packing slips and invoices

Prices must include all charges for freight and inside delivery Delivery will be F O B to the following addresses

Galveston County Jail
601 54th Street
Galveston, Texas 77551

And

Juvenile Justice Department
6101 Attwater Avenue
Texas City Texas 77590

Invoices are to be mailed in duplicate to

Galveston County Auditing Department
P O Box 1418
Galveston Texas 77553

The remainder of this page intentionally left blank

State of Texas

County of Galveston

Contract

This Contract is entered into between the County of Galveston, a political subdivision of the State of Texas and the Contractor named below pursuant to Texas Local Government Code, Chapter 262, Subchapter C and the referenced invitation to bid

Contract Number: **CM12179**

Invitation to Bid Number **Bid #B122027 Inmate Clothing and Supplies**

Term of Contract **One (1) year with two (2) one (1) year extensions**

Initial term (Services): Beginning date of execution of this Contract by latest signatory to sign and terminating **August 25, 2013 .**

Term of Completion (Construction or other time specific contract): The Contractor shall complete the work within N/A Calendar Days of the issuance of the notice to proceed The time set forth for completion of the work is an essential element of the job

Renewal Options: (if applicable):

Year One	Yes (X) No ( )
Year Two	Yes (X) No ( )
Year Three	Yes ( ) No (X)
Year Four	Yes ( ) No (X)

Contractor: **ICS Jail Supplies, Inc.**

Awarded as to addendum(s) (if applicable):

Addendum No 1 ( ) yes ( ) no ( ) n a
Addendum No 2 ( ) yes ( ) no ( ) n a
Addendum No 3 ( ) yes ( ) no ( ) n a

Payment Bond Required ( ) yes (X)no

Performance Bond Required ( ) yes (X) no

Notice to be Given to:

Galveston County

County Purchasing Agent
Galveston County
722 Moody
Fifth (5th) Floor
Galveston, Texas 77550

Contractor

ICS Jail Supplies, Inc.
PO Box 21056
Waco, TX 76702-1056
Phone 800-524-5427 Fax. 254-751-0299
WWW ICSWACO COM
bids@icswaco com
FED ID# 27-1494351
GSA Contact # GS 07F-0552U

County and Contractor agree as follows:

1 **Parts of Contract** Sections I (Invitation to Bid; Instructions to Bidders), II (Bid Proposal; Contract Award), III (Special Terms and Conditions, including Specifications, Drawings and Addenda, if any), and IV (General Terms and Conditions) attached to this Contract Award are all made a part of this Contract and collectively evidence and constitute the entire contract.

2 **Contractor Responsibilities** Contractor will obtain all required permits or licenses, if any; furnish all of the required materials, equipment, and supplies, perform all of the work specified in the bid package; and do everything called for therein All work shall be performed in a good and workmanlike manner and at minimal interruption of daily County activities

3. **Payment for Services**: The County, upon satisfactory work by Contractor and receipt of approved invoice, will pay Contractor according to prices and payment schedule listed in the bid sheets contained in Contractor's Bid Proposal.

4 **Independent Contractor** None of the provisions of this contract for services are intended to create, nor shall be deemed to create, any relationship between Galveston County and Contractor other than that of independent entities contracting with each other solely for the purpose of effecting the provisions of this Contract In the performance of work, duties and obligations under this agreement, Contractor is at all times acting and performing as an independent contractor with complete control over the means, manner, and method by which services are rendered. Contractor is not an agent or employee of the County for any purpose. Contractor and his employees are not eligible for nor will be permitted to participate in any employee benefit plans which are normally provided to employees of the County, including vacation and sick leave, retirement plans, disability and worker's compensation. County assumes no liability to any third party for any actions, inactions or deeds taken in the performance of services by Contractor, its agents, employees or representatives

5 **Employment Taxes**: Contractor shall be solely responsible for all IRS tax reporting and quarterly payments of estimated tax, FICA payments, and any other tax withholding required by the State or Federal governments

6 **Initial Term and Options to Renew**: The initial term of the Contract will be as stated above. Contractor hereby grants to County the unilateral right to exercise an option to renew this Contract for such periods of time as specified above. Such option to renew shall be exercised only if all terms and conditions, except for the contract period being extended and pricing indicated on bid sheets, remain unchanged and in full force and effect. Each option is to be executed in the form of a letter from the County Purchasing Agent advising the Contractor of the election of the option Each option is to be issued not sooner than Ninety (90) Days prior to expiration of this contract or each renewal period, nor later than the final day of the contract period or each renewal period. Each option to renew may not cover more than one (1) year. The total period of this contract, including all extensions as a result of exercising this option, may not exceed the maximum combined period specified above

7 **Cancellation**. County may cancel the Contract, with or without cause, or solely for its convenience upon thirty (30) days prior written notice to the Contractor.

8 **Covenant Against Contingent Fees**. Contractor warrants that no persons or selling agency has been employed or retained to solicit or secure this contract upon an agreement or understanding for a commission, percentage, brokerage, or continent fee, excepting bona fide employees or bona fide established commercial selling agencies maintained by the Contractor for the purpose of securing business. For breach or violation of this warranty, County shall have the right to immediately terminate this Contract without liability to Contractor, or in its discretion to deduct from the contract price for consideration, or otherwise recover the full amount of such commission, percentage, brokerage, or contingent fee.

9. **Subcontracting or Assignment**· Contractor may not assign, sell, or otherwise transfer this Contract in whole or in part without prior written permission of the County. Such consent, if granted, shall not relieve the Contractor of any of its responsibilities under the contract Failure to request consent shall be grounds for termination.

10 **Novation and Change of Name Agreements**: Contractor is responsible for the performance of this Contract. In the event a change of name or novation agreement (change of ownership) is required pursuant to action initiated by the Contractor, the County Purchasing Agent shall be notified immediately. No change in the obligation of the Contractor will be recognized until such change is approved by Commissioners' Court.

11 **Force Majeure**· In the event that the performance by the County of any of its obligations or undertakings hereunder shall be interrupted or delayed by any occurrence not occasioned by its own conduct, whether such occurrence by an act of God or the common enemy or the result of war, riot, civil commotion, sovereign conduct, or the act or conduct of any person or persons not a party or privy hereto, then it shall be excused from such performance for such period of time as is reasonably necessary after such occurrence to remedy the effects thereof.

12 **Entirety of Agreement and Modification.** This Contract contains the entire agreement of the parties. Any prior agreement, promise, negotiation, or representation not expressly set forth in this Contract has no force or effect This Contract may be amended or changed only by the written consent of each party hereto duly executed by the authorized representative of each party.

13 **Severability** If a provision contained in this contract is held invalid for any reason, the invalidity shall not affect other provisions of the contract that can be given effect without the invalid provision, and to this end the provisions of this Contract are severable

14 **Validity/Enforceability** If any current or future legal limitations affect the validity or enforceability of a provision of this Contract, then the legal limitations are made a part of this Contract and shall operate to amend this contract to the minimum extent necessary to bring this contract into conformity with the requirements of the limitation, and as so modified, this Contract shall continue in full force and effect.

15. **Governing Law**· This Contract shall be governed by the laws of the State of Texas and all obligations of the parties are performable in Galveston, Texas Venue shall lie exclusively in Galveston, Texas

16. **Benefit** This contract is intended to inure only to the benefit of County and Contractor This contract is not intended to create, nor shall be deemed or construed to create, any rights in third parties.

17. **Authority to Bind**: The person or persons executing and signing this Contract on behalf of each party guarantee that the person or persons are fully authorized to execute the contract and to legally bind the party to all terms and provisions of this contract, and that this contract constitutes the legal, valid, and binding agreement of each party hereto

18. **Immunity Retained**· The County does not waive or relinquish any immunity or defense on behalf of itself, its trustees, officer, employees, and agents as a result of its execution of this contract and performance of the covenants contained herein The County specifically reserves any claim it may have to sovereign, qualified, or official immunity as a defense to any action arising in conjunction with this contract.

19 **Meaning of Words**· Except as provided otherwise, words shall be given their ordinary meaning If a word is connected with and used with reference to a particular trade or subject matter or is used as a word of art, the word shall have the meaning given by experts in the particular trade, subject matter, or art. Words in the present or past tense include the future tense. The singular includes the plural and the plural includes the singular unless expressly provided otherwise

20. **Public Information Act**· the parties agree that the County is a governmental body for purposes of the Public Information Act, codified as Chapter 552 of the Texas Government Code and as such is required to release information in accordance with the Public Information Act

21. **Headings**: The headings at the beginning of the various provisions of this agreement have been included only in order to make it easier to locate the subject covered by each provision and are not to be used in construing this agreement

22. **Conflict of Provisions:** In the event of an irreconcilable conflict between provision of this Contract and any part of the Contract listed in Paragraph One above, the terms of this Contract shall prevail.

Executed on this the effective 26 day of August, 2012

Contractor:

By: J.M. Bogan III

Date: 7/9/12

Galveston County

By: Mark A. Henry, County Judge

Date: 8/21/12

Attest:

Dwight Sullivan, County Clerk

By: Brandy Chapman **Deputy**
Brandy Chapman

State of Texas

County of Galveston

Contract

This Contract is entered into between the County of Galveston, a political subdivision of the State of Texas and the Contractor named below pursuant to Texas Local Government Code, Chapter 262, Subchapter C and the referenced invitation to bid

Contract Number: **CM12179**

Invitation to Bid Number: **Bid #B122027 Inmate Clothing and Supplies**

Term of Contract **One (1) year with two (2) one (1) year extensions**

Initial term (Services) Beginning date of execution of this Contract by latest signatory to sign and terminating **August 25, 2013 .**

Term of Completion (Construction or other time specific contract): The Contractor shall complete the work within N/A Calendar Days of the issuance of the notice to proceed The time set forth for completion of the work is an essential element of the job

Renewal Options: (if applicable):

Year One	Yes (X) No ( )
Year Two	Yes (X) No ( )
Year Three	Yes ( ) No (X)
Year Four	Yes ( ) No (X)

Contractor: **Robinson Textiles, Inc.**

Awarded as to addendum(s) (if applicable):

Addendum No 1 ( ) yes ( ) no ( ) n a
Addendum No 2 ( ) yes ( ) no ( ) n a
Addendum No 3 ( ) yes ( ) no ( ) n a

Payment Bond Required ( ) yes (X)no

Performance Bond Required ( ) yes (X) no

Notice to be Given to:

Galveston County

County Purchasing Agent
Galveston County
722 Moody
Fifth (5th) Floor
Galveston, Texas 77550

Contractor:

ROBINSON TEXTILES, INC.
152 W. WALNUT ST., STE. 250
GARDENA, CA. 90248
TEL: (800) 421-5582
FAX: (800) 370-7019

County and Contractor agree as follows:

1 **Parts of Contract.** Sections I (Invitation to Bid, Instructions to Bidders), II (Bid Proposal, Contract Award), III (Special Terms and Conditions, including Specifications, Drawings and Addenda, if any), and IV (General Terms and Conditions) attached to this Contract Award are all made a part of this Contract and collectively evidence and constitute the entire contract

2. **Contractor Responsibilities:** Contractor will obtain all required permits or licenses, if any, furnish all of the required materials, equipment, and supplies; perform all of the work specified in the bid package; and do everything called for therein All work shall be performed in a good and workmanlike manner and at minimal interruption of daily County activities.

3 **Payment for Services.** The County, upon satisfactory work by Contractor and receipt of approved invoice, will pay Contractor according to prices and payment schedule listed in the bid sheets contained in Contractor's Bid Proposal.

4 **Independent Contractor:** None of the provisions of this contract for services are intended to create, nor shall be deemed to create, any relationship between Galveston County and Contractor other than that of independent entities contracting with each other solely for the purpose of effecting the provisions of this Contract In the performance of work, duties and obligations under this agreement, Contractor is at all times acting and performing as an independent contractor with complete control over the means, manner, and method by which services are rendered Contractor is not an agent or employee of the County for any purpose Contractor and his employees are not eligible for nor will be permitted to participate in any employee benefit plans which are normally provided to employees of the County, including vacation and sick leave, retirement plans, disability and worker's compensation County assumes no liability to any third party for any actions, inactions or deeds taken in the performance of services by Contractor, its agents, employees or representatives

5. **Employment Taxes**: Contractor shall be solely responsible for all IRS tax reporting and quarterly payments of estimated tax, FICA payments, and any other tax withholding required by the State or Federal governments

6 **Initial Term and Options to Renew**. The initial term of the Contract will be as stated above Contractor hereby grants to County the unilateral right to exercise an option to renew this Contract for such periods of time as specified above Such option to renew shall be exercised only if all terms and conditions, except for the contract period being extended and pricing indicated on bid sheets, remain unchanged and in full force and effect Each option is to be executed in the form of a letter from the County Purchasing Agent advising the Contractor of the election of the option. Each option is to be issued not sooner than Ninety (90) Days prior to expiration of this contract or each renewal period, nor later than the final day of the contract period or each renewal period. Each option to renew may not cover more than one (1) year. The total period of this contract, including all extensions as a result of exercising this option, may not exceed the maximum combined period specified above

7 **Cancellation** County may cancel the Contract, with or without cause, or solely for its convenience upon thirty (30) days prior written notice to the Contractor

8. **Covenant Against Contingent Fees** Contractor warrants that no persons or selling agency has been employed or retained to solicit or secure this contract upon an agreement or understanding for a commission, percentage, brokerage, or continent fee, excepting bona fide employees or bona fide established commercial selling agencies maintained by the Contractor for the purpose of securing business For breach or violation of this warranty, County shall have the right to immediately terminate this Contract without liability to Contractor, or in its discretion to deduct from the contract price for consideration, or otherwise recover the full amount of such commission, percentage, brokerage, or contingent fee.

9. **Subcontracting or Assignment**: Contractor may not assign, sell, or otherwise transfer this Contract in whole or in part without prior written permission of the County Such consent, if granted, shall not relieve the Contractor of any of its responsibilities under the contract. Failure to request consent shall be grounds for termination.

10. **Novation and Change of Name Agreements** Contractor is responsible for the performance of this Contract. In the event a change of name or novation agreement (change of ownership) is required pursuant to action initiated by the Contractor, the County Purchasing Agent shall be notified immediately No change in the obligation of the Contractor will be recognized until such change is approved by Commissioners' Court.

11. **Force Majeure**· In the event that the performance by the County of any of its obligations or undertakings hereunder shall be interrupted or delayed by any occurrence not occasioned by its own conduct, whether such occurrence by an act of God or the common enemy or the result of war, riot, civil commotion, sovereign conduct, or the act or conduct of any person or persons not a party or privy hereto, then it shall be excused from such performance for such period of time as is reasonably necessary after such occurrence to remedy the effects thereof.

12 **Entirety of Agreement and Modification**. This Contract contains the entire agreement of the parties Any prior agreement, promise, negotiation, or representation not expressly set forth in this Contract has no force or effect. This Contract may be amended or changed only by the written consent of each party hereto duly executed by the authorized representative of each party

13 **Severability** If a provision contained in this contract is held invalid for any reason, the invalidity shall not affect other provisions of the contract that can be given effect without the invalid provision, and to this end the provisions of this Contract are severable.

14 **Validity/Enforceability**. If any current or future legal limitations affect the validity or enforceability of a provision of this Contract, then the legal limitations are made a part of this Contract and shall operate to amend this contract to the minimum extent necessary to bring this contract into conformity with the requirements of the limitation, and as so modified, this Contract shall continue in full force and effect.

15. **Governing Law** This Contract shall be governed by the laws of the State of Texas and all obligations of the parties are performable in Galveston, Texas Venue shall lie exclusively in Galveston, Texas

16. **Benefit** This contract is intended to inure only to the benefit of County and Contractor. This contract is not intended to create, nor shall be deemed or construed to create, any rights in third parties

17 **Authority to Bind**. The person or persons executing and signing this Contract on behalf of each party guarantee that the person or persons are fully authorized to execute the contract and to legally bind the party to all terms and provisions of this contract, and that this contract constitutes the legal, valid, and binding agreement of each party hereto.

18 **Immunity Retained** The County does not waive or relinquish any immunity or defense on behalf of itself, its trustees, officer, employees, and agents as a result of its execution of this contract and performance of the covenants contained herein. The County specifically reserves any claim it may have to sovereign, qualified, or official immunity as a defense to any action arising in conjunction with this contract

19 **Meaning of Words**· Except as provided otherwise, words shall be given their ordinary meaning. If a word is connected with and used with reference to a particular trade or subject matter or is used as a word of art, the word shall have the meaning given by experts in the particular trade, subject matter, or art Words in the present or past tense include the future tense The singular includes the plural and the plural includes the singular unless expressly provided otherwise.

20 **Public Information Act**: the parties agree that the County is a governmental body for purposes of the Public Information Act, codified as Chapter 552 of the Texas Government Code and as such is required to release information in accordance with the Public Information Act.

21 **Headings** The headings at the beginning of the various provisions of this agreement have been included only in order to make it easier to locate the subject covered by each provision and are not to be used in construing this agreement

22. **Conflict of Provisions:** In the event of an irreconcilable conflict between provision of this Contract and any part of the Contract listed in Paragraph One above, the terms of this Contract shall prevail.

Executed on this the 26 effective day of August, 2012

Contractor:

Robinson Textiles

By: Jennifer L Hutsal

Date: 7-13-12

Galveston County

By: Mark A. Henry

Date: 8/21/12

Mark A. Henry, County Judge

Attest:

Dwight Sullivan, County Clerk

By: Brandy Chapman **Deputy**

Brandy Chapman

State of Texas

County of Galveston

Contract

This Contract is entered into between the County of Galveston, a political subdivision of the State of Texas and the Contractor named below pursuant to Texas Local Government Code, Chapter 262, Subchapter C and the referenced invitation to bid

Contract Number: CM12179

Invitation to Bid Number: Bid #B122027 Inmate Clothing and Supplies

Term of Contract One (1) year with two (2) one (1) year extensions

Initial term (Services) Beginning date of execution of this Contract by latest signatory to sign and terminating **August 25, 2013 .**

Term of Completion (Construction or other time specific contract): The Contractor shall complete the work within N/A Calendar Days of the issuance of the notice to proceed The time set forth for completion of the work is an essential element of the job

Renewal Options: (if applicable):

Year One	Yes (X) No ( )
Year Two	Yes (X) No ( )
Year Three	Yes ( ) No (X)
Year Four	Yes ( ) No (X)

Contractor: Bob Barker Company

Awarded as to addendum(s) (if applicable):

Addendum No 1 ( ) yes ( ) no ( ) n a
Addendum No 2 ( ) yes ( ) no ( ) n a
Addendum No 3 ( ) yes ( ) no ( ) n a

Payment Bond Required ( ) yes (X)no

Performance Bond Required ( ) yes (X) no

Notice to be Given to:

Galveston County

County Purchasing Agent
Galveston County
722 Moody
Fifth (5th) Floor
Galveston, Texas 77550

Contractor

Bob Barker Company Inc
134 N Main Street
Fuquay-Varina, NC 27526

County and Contractor agree as follows:

1. **Parts of Contract**: Sections I (Invitation to Bid; Instructions to Bidders), II (Bid Proposal, Contract Award), III (Special Terms and Conditions, including Specifications, Drawings and Addenda, if any), and IV (General Terms and Conditions) attached to this Contract Award are all made a part of this Contract and collectively evidence and constitute the entire contract

2 **Contractor Responsibilities**: Contractor will obtain all required permits or licenses, if any, furnish all of the required materials, equipment, and supplies; perform all of the work specified in the bid package, and do everything called for therein. All work shall be performed in a good and workmanlike manner and at minimal interruption of daily County activities

3. **Payment for Services**: The County, upon satisfactory work by Contractor and receipt of approved invoice, will pay Contractor according to prices and payment schedule listed in the bid sheets contained in Contractor's Bid Proposal.

4. **Independent Contractor**: None of the provisions of this contract for services are intended to create, nor shall be deemed to create, any relationship between Galveston County and Contractor other than that of independent entities contracting with each other solely for the purpose of effecting the provisions of this Contract In the performance of work, duties and obligations under this agreement, Contractor is at all times acting and performing as an independent contractor with complete control over the means, manner, and method by which services are rendered. Contractor is not an agent or employee of the County for any purpose. Contractor and his employees are not eligible for nor will be permitted to participate in any employee benefit plans which are normally provided to employees of the County, including vacation and sick leave, retirement plans, disability and worker's compensation. County assumes no liability to any third party for any actions, inactions or deeds taken in the performance of services by Contractor, its agents, employees or representatives.

5. **Employment Taxes**. Contractor shall be solely responsible for all IRS tax reporting and quarterly payments of estimated tax, FICA payments, and any other tax withholding required by the State or Federal governments

6. **Initial Term and Options to Renew**. The initial term of the Contract will be as stated above. Contractor hereby grants to County the unilateral right to exercise an option to renew this Contract for such periods of time as specified above Such option to renew shall be exercised only if all terms and conditions, except for the contract period being extended and pricing indicated on bid sheets, remain unchanged and in full force and effect. Each option is to be executed in the form of a letter from the County Purchasing Agent advising the Contractor of the election of the option. Each option is to be issued not sooner than Ninety (90) Days prior to expiration of this contract or each renewal period, nor later than the final day of the contract period or each renewal period Each option to renew may not cover more than one (1) year. The total period of this contract, including all extensions as a result of exercising this option, may not exceed the maximum combined period specified above

7 **Cancellation**: County may cancel the Contract, with or without cause, or solely for its convenience upon thirty (30) days prior written notice to the Contractor

8 **Covenant Against Contingent Fees**: Contractor warrants that no persons or selling agency has been employed or retained to solicit or secure this contract upon an agreement or understanding for a commission, percentage, brokerage, or continent fee, excepting bona fide employees or bona fide established commercial selling agencies maintained by the Contractor for the purpose of securing business. For breach or violation of this warranty, County shall have the right to immediately terminate this Contract without liability to Contractor, or in its discretion to deduct from the contract price for consideration, or otherwise recover the full amount of such commission, percentage, brokerage, or contingent fee.

9. **Subcontracting or Assignment** Contractor may not assign, sell, or otherwise transfer this Contract in whole or in part without prior written permission of the County Such consent, if granted, shall not relieve the Contractor of any of its responsibilities under the contract. Failure to request consent shall be grounds for termination.

10 **Novation and Change of Name Agreements** Contractor is responsible for the performance of this Contract In the event a change of name or novation agreement (change of ownership) is required pursuant to action initiated by the Contractor, the County Purchasing Agent shall be notified immediately. No change in the obligation of the Contractor will be recognized until such change is approved by Commissioners' Court

11 **Force Majeure**. In the event that the performance by the County of any of its obligations or undertakings hereunder shall be interrupted or delayed by any occurrence not occasioned by its own conduct, whether such occurrence by an act of God or the common enemy or the result of war, riot, civil commotion, sovereign conduct, or the act or conduct of any person or persons not a party or privy hereto, then it shall be excused from such performance for such period of time as is reasonably necessary after such occurrence to remedy the effects thereof.

12. **Entirety of Agreement and Modification**: This Contract contains the entire agreement of the parties. Any prior agreement, promise, negotiation, or representation not expressly set forth in this Contract has no force or effect. This Contract may be amended or changed only by the written consent of each party hereto duly executed by the authorized representative of each party

13 **Severability** If a provision contained in this contract is held invalid for any reason, the invalidity shall not affect other provisions of the contract that can be given effect without the invalid provision, and to this end the provisions of this Contract are severable

14 **Validity/Enforceability** If any current or future legal limitations affect the validity or enforceability of a provision of this Contract, then the legal limitations are made a part of this Contract and shall operate to amend this contract to the minimum extent necessary to bring this contract into conformity with the requirements of the limitation, and as so modified, this Contract shall continue in full force and effect.

15. **Governing Law**. This Contract shall be governed by the laws of the State of Texas and all obligations of the parties are performable in Galveston, Texas. Venue shall lie exclusively in Galveston, Texas.

16 **Benefit**· This contract is intended to inure only to the benefit of County and Contractor. This contract is not intended to create, nor shall be deemed or construed to create, any rights in third parties

17. **Authority to Bind**. The person or persons executing and signing this Contract on behalf of each party guarantee that the person or persons are fully authorized to execute the contract and to legally bind the party to all terms and provisions of this contract, and that this contract constitutes the legal, valid, and binding agreement of each party hereto

18. **Immunity Retained**. The County does not waive or relinquish any immunity or defense on behalf of itself, its trustees, officer, employees, and agents as a result of its execution of this contract and performance of the covenants contained herein. The County specifically reserves any claim it may have to sovereign, qualified, or official immunity as a defense to any action arising in conjunction with this contract.

19. **Meaning of Words** Except as provided otherwise, words shall be given their ordinary meaning If a word is connected with and used with reference to a particular trade or subject matter or is used as a word of art, the word shall have the meaning given by experts in the particular trade, subject matter, or art. Words in the present or past tense include the future tense. The singular includes the plural and the plural includes the singular unless expressly provided otherwise

20. **Public Information Act**. the parties agree that the County is a governmental body for purposes of the Public Information Act, codified as Chapter 552 of the Texas Government Code and as such is required to release information in accordance with the Public Information Act

21. **Headings**: The headings at the beginning of the various provisions of this agreement have been included only in order to make it easier to locate the subject covered by each provision and are not to be used in construing this agreement.

22. **Conflict of Provisions:** In the event of an irreconcilable conflict between provision of this Contract and any part of the Contract listed in Paragraph One above, the terms of this Contract shall prevail.

Executed on this the effective 26 day of August, 2012

Contractor:

Bob Barker Company Inc

By:

Allison Wilmesmeier, Pricing Specialist

Date: 7/13/12

Galveston County

By:

Mark A. Henry, County Judge

Date: 8/21/12

Attest:

Dwight Sullivan, County Clerk

By: Brandy Chapman **Deputy**
Brandy Chapman

State of Texas

County of Galveston

Contract

This Contract is entered into between the County of Galveston, a political subdivision of the State of Texas and the Contractor named below pursuant to Texas Local Government Code, Chapter 262, Subchapter C and the referenced invitation to bid

Contract Number: CM12179

Invitation to Bid Number Bid #B122027 Inmate Clothing and Supplies

Term of Contract One (1) year with two (2) one (1) year extensions

Initial term (Services) Beginning date of execution of this Contract by latest signatory to sign and terminating **August 25, 2013 .**

Term of Completion (Construction or other time specific contract): The Contractor shall complete the work within N/A Calendar Days of the issuance of the notice to proceed The time set forth for completion of the work is an essential element of the job

Renewal Options: (if applicable):

Year One	Yes (X) No ( )
Year Two	Yes (X) No ( )
Year Three	Yes ( ) No (X)
Year Four	Yes ( ) No (X)

Contractor: Charm-Tex

Awarded as to addendum(s) (if applicable):

Addendum No 1 ( ) yes ( ) no ( ) n a
Addendum No 2 ( ) yes ( ) no ( ) n a
Addendum No 3 ( ) yes ( ) no ( ) n a

Payment Bond Required ( ) yes (X)no

Performance Bond Required ( ) yes (X) no

Notice to be Given to:

Galveston County·

County Purchasing Agent
Galveston County
722 Moody
Fifth (5th) Floor
Galveston, Texas 77550

Contractor

Chain - Tex
1618 Coney Island Ave
Brooklyn NY 11230

County and Contractor agree as follows:

1. **Parts of Contract** Sections I (Invitation to Bid, Instructions to Bidders), II (Bid Proposal, Contract Award), III (Special Terms and Conditions, including Specifications, Drawings and Addenda, if any), and IV (General Terms and Conditions) attached to this Contract Award are all made a part of this Contract and collectively evidence and constitute the entire contract

2. **Contractor Responsibilities**: Contractor will obtain all required permits or licenses, if any; furnish all of the required materials, equipment, and supplies, perform all of the work specified in the bid package, and do everything called for therein. All work shall be performed in a good and workmanlike manner and at minimal interruption of daily County activities.

3. **Payment for Services**· The County, upon satisfactory work by Contractor and receipt of approved invoice, will pay Contractor according to prices and payment schedule listed in the bid sheets contained in Contractor's Bid Proposal.

4. **Independent Contractor**: None of the provisions of this contract for services are intended to create, nor shall be deemed to create, any relationship between Galveston County and Contractor other than that of independent entities contracting with each other solely for the purpose of effecting the provisions of this Contract. In the performance of work, duties and obligations under this agreement, Contractor is at all times acting and performing as an independent contractor with complete control over the means, manner, and method by which services are rendered. Contractor is not an agent or employee of the County for any purpose. Contractor and his employees are not eligible for nor will be permitted to participate in any employee benefit plans which are normally provided to employees of the County, including vacation and sick leave, retirement plans, disability and worker's compensation County assumes no liability to any third party for any actions, inactions or deeds taken in the performance of services by Contractor, its agents, employees or representatives

5 **Employment Taxes**. Contractor shall be solely responsible for all IRS tax reporting and quarterly payments of estimated tax, FICA payments, and any other tax withholding required by the State or Federal governments

6 **Initial Term and Options to Renew** The initial term of the Contract will be as stated above Contractor hereby grants to County the unilateral right to exercise an option to renew this Contract for such periods of time as specified above Such option to renew shall be exercised only if all terms and conditions, except for the contract period being extended and pricing indicated on bid sheets, remain unchanged and in full force and effect. Each option is to be executed in the form of a letter from the County Purchasing Agent advising the Contractor of the election of the option. Each option is to be issued not sooner than Ninety (90) Days prior to expiration of this contract or each renewal period, nor later than the final day of the contract period or each renewal period. Each option to renew may not cover more than one (1) year The total period of this contract, including all extensions as a result of exercising this option, may not exceed the maximum combined period specified above.

7 **Cancellation**. County may cancel the Contract, with or without cause, or solely for its convenience upon thirty (30) days prior written notice to the Contractor

8 **Covenant Against Contingent Fees** Contractor warrants that no persons or selling agency has been employed or retained to solicit or secure this contract upon an agreement or understanding for a commission, percentage, brokerage, or continent fee, excepting bona fide employees or bona fide established commercial selling agencies maintained by the Contractor for the purpose of securing business. For breach or violation of this warranty, County shall have the right to immediately terminate this Contract without liability to Contractor, or in its discretion to deduct from the contract price for consideration, or otherwise recover the full amount of such commission, percentage, brokerage, or contingent fee.

9 **Subcontracting or Assignment**: Contractor may not assign, sell, or otherwise transfer this Contract in whole or in part without prior written permission of the County. Such consent, if granted, shall not relieve the Contractor of any of its responsibilities under the contract Failure to request consent shall be grounds for termination.

10 **Novation and Change of Name Agreements**· Contractor is responsible for the performance of this Contract. In the event a change of name or novation agreement (change of ownership) is required pursuant to action initiated by the Contractor, the County Purchasing Agent shall be notified immediately No change in the obligation of the Contractor will be recognized until such change is approved by Commissioners' Court

11 **Force Majeure**: In the event that the performance by the County of any of its obligations or undertakings hereunder shall be interrupted or delayed by any occurrence not occasioned by its own conduct, whether such occurrence by an act of God or the common enemy or the result of war, riot, civil commotion, sovereign conduct, or the act or conduct of any person or persons not a party or privy hereto, then it shall be excused from such performance for such period of time as is reasonably necessary after such occurrence to remedy the effects thereof

12 **Entirety of Agreement and Modification**. This Contract contains the entire agreement of the parties. Any prior agreement, promise, negotiation, or representation not expressly set forth in this Contract has no force or effect. This Contract may be amended or changed only by the written consent of each party hereto duly executed by the authorized representative of each party

13. **Severability** If a provision contained in this contract is held invalid for any reason, the invalidity shall not affect other provisions of the contract that can be given effect without the invalid provision, and to this end the provisions of this Contract are severable

14. **Validity/Enforceability**· If any current or future legal limitations affect the validity or enforceability of a provision of this Contract, then the legal limitations are made a part of this Contract and shall operate to amend this contract to the minimum extent necessary to bring this contract into conformity with the requirements of the limitation, and as so modified, this Contract shall continue in full force and effect.

15. **Governing Law** This Contract shall be governed by the laws of the State of Texas and all obligations of the parties are performable in Galveston, Texas. Venue shall lie exclusively in Galveston, Texas.

16 **Benefit**· This contract is intended to inure only to the benefit of County and Contractor This contract is not intended to create, nor shall be deemed or construed to create, any rights in third parties

17. **Authority to Bind**: The person or persons executing and signing this Contract on behalf of each party guarantee that the person or persons are fully authorized to execute the contract and to legally bind the party to all terms and provisions of this contract, and that this contract constitutes the legal, valid, and binding agreement of each party hereto

18. **Immunity Retained**: The County does not waive or relinquish any immunity or defense on behalf of itself, its trustees, officer, employees, and agents as a result of its execution of this contract and performance of the covenants contained herein The County specifically reserves any claim it may have to sovereign, qualified, or official immunity as a defense to any action arising in conjunction with this contract.

19 **Meaning of Words**. Except as provided otherwise, words shall be given their ordinary meaning If a word is connected with and used with reference to a particular trade or subject matter or is used as a word of art, the word shall have the meaning given by experts in the particular trade, subject matter, or art. Words in the present or past tense include the future tense. The singular includes the plural and the plural includes the singular unless expressly provided otherwise.

20 **Public Information Act**· the parties agree that the County is a governmental body for purposes of the Public Information Act, codified as Chapter 552 of the Texas Government Code and as such is required to release information in accordance with the Public Information Act

21 **Headings**: The headings at the beginning of the various provisions of this agreement have been included only in order to make it easier to locate the subject covered by each provision and are not to be used in construing this agreement

22 **Conflict of Provisions:** In the event of an irreconcilable conflict between provision of this Contract and any part of the Contract listed in Paragraph One above, the terms of this Contract shall prevail

Executed on this the 26 day of August, 2012 effective

Contractor:

CHARM-TEX

By:

Date: 08/21/12

Galveston County

By:

Mark A. Henry

Mark A. Henry, County Judge

Date: 8/21/12

Attest:

Dwight Sullivan, County Clerk

By: Brandy Chapman **Deputy**

Brandy Chapman

State of Texas

County of Galveston

Contract

This Contract is entered into between the County of Galveston, a political subdivision of the State of Texas and the Contractor named below pursuant to Texas Local Government Code, Chapter 262, Subchapter C and the referenced invitation to bid

Contract Number: **CM12179**

Invitation to Bid Number **Bid #B122027 Inmate Clothing and Supplies**

Term of Contract **One (1) year with two (2) one (1) year extensions**

Initial term (Services) Beginning date of execution of this Contract by latest signatory to sign and terminating **August 25, 2013 .**

Term of Completion (Construction or other time specific contract): The Contractor shall complete the work within N/A Calendar Days of the issuance of the notice to proceed The time set forth for completion of the work is an essential element of the job

Renewal Options: (if applicable):

Year One	Yes (X) No ( )
Year Two	Yes (X) No ( )
Year Three	Yes ( ) No (X)
Year Four	Yes ( ) No (X)

Contractor: **American Textiles**

Awarded as to addendum(s) (if applicable):

Addendum No 1 ( ) yes ( ) no ( ) n a
Addendum No 2 ( ) yes ( ) no ( ) n a
Addendum No 3 ( ) yes ( ) no ( ) n a

Payment Bond Required ( ) yes (X)no

Performance Bond Required. ( ) yes (X) no

Notice to be Given to:

Galveston County·

County Purchasing Agent
Galveston County
722 Moody
Fifth (5th) Floor
Galveston, Texas 77550

Contractor·

American Textile Systems
13151 Midway Place
Cerritos, CA 90703

County and Contractor agree as follows:

1 **Parts of Contract**: Sections I (Invitation to Bid; Instructions to Bidders), II (Bid Proposal; Contract Award), III (Special Terms and Conditions, including Specifications, Drawings and Addenda, if any), and IV (General Terms and Conditions) attached to this Contract Award are all made a part of this Contract and collectively evidence and constitute the entire contract

2. **Contractor Responsibilities**: Contractor will obtain all required permits or licenses, if any, furnish all of the required materials, equipment, and supplies, perform all of the work specified in the bid package, and do everything called for therein All work shall be performed in a good and workmanlike manner and at minimal interruption of daily County activities

3. **Payment for Services**. The County, upon satisfactory work by Contractor and receipt of approved invoice, will pay Contractor according to prices and payment schedule listed in the bid sheets contained in Contractor's Bid Proposal.

4 **Independent Contractor**. None of the provisions of this contract for services are intended to create, nor shall be deemed to create, any relationship between Galveston County and Contractor other than that of independent entities contracting with each other solely for the purpose of effecting the provisions of this Contract. In the performance of work, duties and obligations under this agreement, Contractor is at all times acting and performing as an independent contractor with complete control over the means, manner, and method by which services are rendered. Contractor is not an agent or employee of the County for any purpose. Contractor and his employees are not eligible for nor will be permitted to participate in any employee benefit plans which are normally provided to employees of the County, including vacation and sick leave, retirement plans, disability and worker's compensation County assumes no liability to any third party for any actions, inactions or deeds taken in the performance of services by Contractor, its agents, employees or representatives

5 **Employment Taxes** Contractor shall be solely responsible for all IRS tax reporting and quarterly payments of estimated tax, FICA payments, and any other tax withholding required by the State or Federal governments.

6. **Initial Term and Options to Renew**· The initial term of the Contract will be as stated above. Contractor hereby grants to County the unilateral right to exercise an option to renew this Contract for such periods of time as specified above. Such option to renew shall be exercised only if all terms and conditions, except for the contract period being extended and pricing indicated on bid sheets, remain unchanged and in full force and effect. Each option is to be executed in the form of a letter from the County Purchasing Agent advising the Contractor of the election of the option. Each option is to be issued not sooner than Ninety (90) Days prior to expiration of this contract or each renewal period, nor later than the final day of the contract period or each renewal period. Each option to renew may not cover more than one (1) year. The total period of this contract, including all extensions as a result of exercising this option, may not exceed the maximum combined period specified above

7. **Cancellation**: County may cancel the Contract, with or without cause, or solely for its convenience upon thirty (30) days prior written notice to the Contractor

8. **Covenant Against Contingent Fees**: Contractor warrants that no persons or selling agency has been employed or retained to solicit or secure this contract upon an agreement or understanding for a commission, percentage, brokerage, or continent fee, excepting bona fide employees or bona fide established commercial selling agencies maintained by the Contractor for the purpose of securing business. For breach or violation of this warranty, County shall have the right to immediately terminate this Contract without liability to Contractor, or in its discretion to deduct from the contract price for consideration, or otherwise recover the full amount of such commission, percentage, brokerage, or contingent fee.

9 **Subcontracting or Assignment**. Contractor may not assign, sell, or otherwise transfer this Contract in whole or in part without prior written permission of the County Such consent, if granted, shall not relieve the Contractor of any of its responsibilities under the contract. Failure to request consent shall be grounds for termination.

10. **Novation and Change of Name Agreements**: Contractor is responsible for the performance of this Contract. In the event a change of name or novation agreement (change of ownership) is required pursuant to action initiated by the Contractor, the County Purchasing Agent shall be notified immediately No change in the obligation of the Contractor will be recognized until such change is approved by Commissioners' Court.

11 **Force Majeure**: In the event that the performance by the County of any of its obligations or undertakings hereunder shall be interrupted or delayed by any occurrence not occasioned by its own conduct, whether such occurrence by an act of God or the common enemy or the result of war, riot, civil commotion, sovereign conduct, or the act or conduct of any person or persons not a party or privy hereto, then it shall be excused from such performance for such period of time as is reasonably necessary after such occurrence to remedy the effects thereof.

12 **Entirety of Agreement and Modification.** This Contract contains the entire agreement of the parties. Any prior agreement, promise, negotiation, or representation not expressly set forth in this Contract has no force or effect. This Contract may be amended or changed only by the written consent of each party hereto duly executed by the authorized representative of each party

13. **Severability.** If a provision contained in this contract is held invalid for any reason, the invalidity shall not affect other provisions of the contract that can be given effect without the invalid provision, and to this end the provisions of this Contract are severable

14 **Validity/Enforceability**· If any current or future legal limitations affect the validity or enforceability of a provision of this Contract, then the legal limitations are made a part of this Contract and shall operate to amend this contract to the minimum extent necessary to bring this contract into conformity with the requirements of the limitation, and as so modified, this Contract shall continue in full force and effect.

15. **Governing Law**: This Contract shall be governed by the laws of the State of Texas and all obligations of the parties are performable in Galveston, Texas Venue shall lie exclusively in Galveston, Texas.

16 **Benefit**· This contract is intended to inure only to the benefit of County and Contractor This contract is not intended to create, nor shall be deemed or construed to create, any rights in third parties.

17 **Authority to Bind.** The person or persons executing and signing this Contract on behalf of each party guarantee that the person or persons are fully authorized to execute the contract and to legally bind the party to all terms and provisions of this contract, and that this contract constitutes the legal, valid, and binding agreement of each party hereto.

18. **Immunity Retained**· The County does not waive or relinquish any immunity or defense on behalf of itself, its trustees, officer, employees, and agents as a result of its execution of this contract and performance of the covenants contained herein. The County specifically reserves any claim it may have to sovereign, qualified, or official immunity as a defense to any action arising in conjunction with this contract.

19. **Meaning of Words**: Except as provided otherwise, words shall be given their ordinary meaning. If a word is connected with and used with reference to a particular trade or subject matter or is used as a word of art, the word shall have the meaning given by experts in the particular trade, subject matter, or art. Words in the present or past tense include the future tense The singular includes the plural and the plural includes the singular unless expressly provided otherwise.

20. **Public Information Act**: the parties agree that the County is a governmental body for purposes of the Public Information Act, codified as Chapter 552 of the Texas Government Code and as such is required to release information in accordance with the Public Information Act.

21. **Headings**: The headings at the beginning of the various provisions of this agreement have been included only in order to make it easier to locate the subject covered by each provision and are not to be used in construing this agreement.

22 **Conflict of Provisions:** In the event of an irreconcilable conflict between provision of this Contract and any part of the Contract listed in Paragraph One above, the terms of this Contract shall prevail.

Executed on this the effective 26 day of August, 2012.

Contractor:

American Textile Systems

By: **Date:** 7/14/12

Galveston County

By: **Date:** 8/21/12

Mark A. Henry, County Judge

Attest

Dwight Sullivan, County Clerk

By: Brandy Chapman **Deputy**
Brandy Chapman

AGENDA ITEM #30a3

THE COUNTY OF GALVESTON

RUFUS CROWDER, CPPO CPPB
PURCHASING AGENT

COUNTY COURTHOUSE
722 Moody (21st Street)
Fifth (5th) Floor
GALVESTON, TEXAS 77550
(409) 770-5371

GWEN MCLAREN, CPPB
ASST PURCHASING AGENT

August 13, 2012

Honorable County Judge
And Commissioners' Court
County Courthouse
Galveston, Texas

Re: Bid #B122028, Vehicle Repairs

Gentlemen,

On July 10, 2012 bids were opened for Bid #B122028, Vehicle Repairs, at which time four (4) bids were received from the following companies

- Classic Autoplex F-T, LLC — Galveston, Texas
- McRee Ford — Dickinson, Texas
- Liggio's Tire and Service Center, Inc — Dickinson, Texas
- Galveston Battery & Electric Co , Inc — Galveston, Texas

It is recommended that you award this bid to the following vendors

Liggio's Tire and Service Center, Inc	Mainland
Classic Autoplex F-T, LLC	Galveston Island

Your consideration in this matter will be greatly appreciated

Respectfully submitted,

Rufus G Crowder, CPPO, CPPB
Purchasing Agent
County of Galveston

Attachments

BID RESPONSE TABULATION
VEHICLE REPAIRS
GALVESTON COUNTY, TEXAS

BID #: B122028
OPEN 07/31/2012
10.00 AM

Item	Product Cod	Description	Quantity	Units	Vendor 123026 LIGGIOS TIRE AND SERVICE CI Unit Price	Extended	Vendor 131029 MCREE FORD INC Unit Price	Extended	Vendor 712824 GALVESTON BATTERY AND EL Unit Price	Extended
0001	93600	REPAIRS AS LISTED IN CHILTON FACTORY TIME-MAINLAND	1	HR	55 00	55 00	65 00	65 00	0 00	0 00
0002	93600	OTHER REPAIRS AND SERVICE-MAINLAND	1	HR	0 00	0 00	65 00	65 00	0 00	0 00
0003	93600	AFTER MARKET PARTS-RETAIL LESS MAINL	1	EA	0 00	0 00	0 00	0 00	0 00	0 00
0004	93600	FACTORY PARTS-RETAIL LESS-MAINLAND	1	EA	0 00	0 00	0 00	0 00	0 00	0 00
0005	93600	REPAIRS AS LISTED IN CHILTON FACTORY T - GALVESTON	1	HR	0 00	0 00	0 00	0 00	75 00	75 00
0006	93600	OTHER REPAIRS AND SERVICES - GALVESTO	1	HR	0 00	0 00	0 00	0 00	65 00	65 00
0007	93600	AFTER MARKET PARTS - RETAIL LESS GALVI	1	EA	0 00	0 00	0 00	0 00	0 00	0 00
0008	93600	FACTORY PARTS - RETAIL LESS - GALVESTO	1	EA	0 00	0 00	0 00	0 00	0 00	0 00
0009	93600	N/A	1	EA	0 00	0 00	0 00	0 00	0 00	0 00
0010	93600	N/A	1	EA	0 00	0 00	0 00	0 00	0 00	0 00
				Total of all Items		**55.00**		**130.00**		**140.00**

BID RESPONSE TABULATION
VEHICLE REPAIRS
GALVESTON COUNTY, TEXAS

BID #: B122028
OPEN: 07/31/2012
10.00 AM

Item	Product Cod	Description	Quantity	Units	Vendor. 714708 CLASSIC AUTOPLEX F-T LLC		Vendor.		Vendor	
					Unit Price	Extended	Unit Price	Extended	Unit Price	Extended
0001	93600	REPAIRS AS LISTED IN CHILTON FACTORY TIME-MAINLAND	1	HR	0 00	0 00	0 00	0 00	0 00	0 00
0002	93600	OTHER REPAIRS AND SERVICE-MAINLAND	1	HR	0 00	0 00	0 00	0 00	0 00	0 00
0003	93600	AFTER MARKET PARTS-RETAIL LESS MAINL	1	EA	0 00	0 00	0 00	0 00	0 00	0 00
0004	93600	FACTORY PARTS-RETAIL LESS-MAINLAND	1	EA	0 00	0 00	0 00	0 00	0 00	0 00
0005	93600	REPAIRS AS LISTED IN CHILTON FACTORY T - GALVESTON	1	HR	54 00	54 00	0 00	0 00	0 00	0 00
0006	93600	OTHER REPAIRS AND SERVICES - GALVESTO	1	HR	54 00	54 00	0 00	0 00	0 00	0 00
0007	93600	AFTER MARKET PARTS - RETAIL LESS GALVI	1	EA	0 00	0 00	0 00	0 00	0 00	0 00
0008	93600	FACTORY PARTS - RETAIL LESS - GALVESTO	1	EA	0 00	0 00	0 00	0 00	0 00	0 00
0009	93600	N/A	1	EA	0 00	0 00	0 00	0 00	0 00	0 00
0010	93600	N/A	1	EA	0 00	0 00	0 00	0 00	0 00	0 00
				Total of all Items		**108.00**		**0.00**		**0.00**

FREDDIE POOR
Sheriff
Galveston County

August 2, 2012

Rufus Crowder
Purchasing Agent
County of Galveston
722 Moody 5th floor
Galveston, TX 77550

Re Bid opening on Tuesday, July 31st, 2012

Dear Mr Crowder

After reviewing the bids for Sheriff's Office vehicle repairs, we have determined that the bid proposal from Classic Ford & Liggio's Tire & Service Center, Inc meets our specifications

BID NUMBER	VENDOR
B122028	Liggio's Tire & service Center, Inc – Mainland
B122028	Classic Ford - Galveston

Please contact me at (409) 766-2307, if you should have any questions

Sincerely,

B.K Raeburn

Brandt Raeburn, Sgt
Fleet Operations

(409) 682-4018
Fax (409) 770-5132

722 Sealy
Galveston, Texas 77551

CHARLES S. LANGFORD
FLEET MANAGER
COUNTY OF GALVESTON

August 3, 2012

To Rufus G Crowder

Subject Vehicle Repairs Bid

I recommend that on the Vehicles Repairs bids that we go with, Liggio's Tire & Service Center, Inc for the repairs on the Mainland and use Classic Ford for the repairs on the Island

Thank You

Charles S Langford

Email CLangfor@gilbaneco com

The County of Galveston

ROAD & BRIDGE DEPARTMENT
5115 Highway 3
Dickinson, Texas 77539

Layne Harding
Road Administrator

Office 281/534-4152
Facsimile 281/614-5073

Date. August 7, 2012

To Rufus Crowder
Purchasing Agent

From Layne Harding
Road Administrator

Re **Bid# B122028 – Vehicle Repairs**

In reference to the above bid for vehicle repairs, I recommend awarding this bid to Classic Ford for repairs on Galveston Island and Liggio's Tire & Service Center for repairs on the Mainland

LH/djs

Galveston County Parks Department

August 07, 2012

To Rufus Crowder

From Cameron Parker

After reviewing the bids that have been submitted for the vehicle repair contract (BID# 122028), my recommendations are as follow

1. Classic Ford is the candidate that I would recommend for the service of equipment on Galveston Island for the county
2. With the information that has been submitted by the two candidates for the mainland contract, I would recommend Liggio's tire and service

These recommendations are based solely on the information that I have been given in the bid packets I have no prior dealings with any of these vendors and past service and/or pricing was not considered In the future it would be beneficial for the County to have a list of the most utilized services in order to help in the cost comparison

Cameron Parker
Parks Operations Manager

4102 Main Street (FM 519) La Marque TX 77568 (409) 934-8100 Fax (409) 934-8140

BID #: B122028
OPEN: 07/31/2012
TIME: 10:00 AM

SPECIAL PROVISIONS
VEHICLE REPAIRS
GALVESTON COUNTY, TEXAS

BID FORM

The Firm Of ~~LIGGIO'S TIRE SERVICE CENTER, INC.~~
2604 44TH STREET
~~DICKINSON, TX 77539~~

Hereby agrees to provide the requested supplies and services as defined in the bid, attachments thereto, and

Addendum No _____ dated _____, No _____ dated _____, No _____ dated _____

CONDITIONS OF THE INVITATION TO BID: It shall be understood that by submission of this bid, the Bidder agrees to all of the conditions of the Invitation to Bid dated **July31, 2012** and any Addenda issued thereto and referenced above

BIDDER MUST SIGN HERE BELOW:

By signing here, the firm does hereby attest that it has fully read the instructions, conditions and general and special provisions and understands them

Firm Name Liggio's Tire & Service Center, Inc

Authorized Signature: [signature]

Name & Title Printed Vincent Liggio

Telephone No 281-337-5513 FAX No. 281-337-5514

E-Mail Address FireBoss01@AOL.COM

Date 07-20-12

EXCEPTIONS (If no exceptions are taken, state NONE)

Bidder shall use this form to provide the information for notice

1 Contact information for notice

Name Anthony Falco

Address 2604 44th St
Dickinson, TX 77539

Telephone Number 281-337-5513 Facsimile number 281-337-5514

SPECIAL PROVISIONS
VEHICLE REPAIRS
GALVESTON COUNTY, TEXAS

2 If a copy of notice is requested, please complete below

Name Copy of file

Address

Telephone Number _____ Facsimile number _____

3 If second or more copies are requested for notice, please supplement this form and clearly mark the supplement as "Supplementary Notice Information "

Bidder to submit reference information. Bidder shall use this form to provide minimum required reference information If Bidder wishes to provide more than the minimum, Bidder should supplement this form and should clearly mark the supplement as "Supplementary Reference Information "

1 References who can attest to the Bidder's capability to carry out the requirements set forth in this bid

Name of Organization _____
Name of Person _____
Title of individual within Organization, if applicable _____
Business address _____

Telephone Number _____ Facsimile number _____

Name of Organization _____
Name of Person _____
Title of individual within Organization, if applicable _____
Business address _____

Telephone Number _____ Facsimile number _____

Name of Organization _____
Name of Person _____
Title of individual within Organization, if applicable _____
Business address _____

Telephone Number _____ Facsimile number _____

LINE ITEM DETAIL

VEHICLE REPAIRS

GALVESTON COUNTY, TEXAS

BID #: B122028
OPEN: 07/31/2012
10:00 AM

VENDOR ID LIGGIO'S TIRE & SERVICE CENTER, INC.

Item No	Product Code	Description	Quantity	Units	Catalog #	Unit Price	Extended Price
0001	93600	REPAIRS AS LISTED IN CHILTON FACTORY TIME-MAINLAND	1	HR		$ 55.00	$ 55.00
0002	93600	OTHER REPAIRS AND SERVICE-MAINLAND	1	HR		$ per list	$
0003	93600	AFTER MARKET PARTS-RETAIL LESS MAINLAND	1	EA		$ -15 %	$
0004	93600	FACTORY PARTS-RETAIL LESS-MAINLAND	1	EA		$ -10 %	$
0005	93600	REPAIRS AS LISTED IN CHILTON FACTORY TIME - GALVESTON	1	HR		$	$
0006	93600	OTHER REPAIRS AND SERVICES - GALVESTON	1	HR		$	$
0007	93600	AFTER MARKET PARTS - RETAIL LESS GALVESTON	1	EA		$	$
0008	93600	FACTORY PARTS - RETAIL LESS - GALVESTON	1	EA		$	$
0009	93600	N/A	1	EA		$	$

LIGGIO'S TIRE SERVICE CENTER, INC.
2604 44TH STREET
DICKINSON, TX 77539

LINE ITEM DETAIL

VEHICLE REPAIRS

GALVESTON COUNTY, TEXAS

BID #: B122028
OPEN: 07/31/2012
10:00 AM

VENDOR ID: LIGGIO'S TIRE & SERVICE CENTER INC

em No	Product Code	Description	Quantity	Units	Catalog #	Unit Price	Extended Price
0010	93600	N/A	1	EA	_____	$_____	$_____

Extended Price Total of all Iten $_____

GGIO'S TIRE SERVICE CENTER, INC
04 44TH STREET
CKINSON, TX 77539

LIGGIO'S TIRE AND SERVICE CENTER, INC.
2604 44TH STREET
DICKINSON, TEXAS 77539
281-337-5513

BID# B122028

EXCEPTIONS

GALVESTON COUNTY PURCHASING AGENT
P O BOX 1418
GALVESTON, TEXAS 77533

OIL - FILTER AND LUBE 5 QUARTS	25 00
OIL - FILTER AND LUBE 6 QUARTS	28.00
TIRE REPAIR	13 00
FRONT BRAKES INSTALL PADS AND RESURFACE BRAKE ROTORS LABOR ONLY 2 WHEEL DRIVE	90 00
REAR BRAKES INSTALL PADS AND RESURFACE BRAKES ROTORS	90 00
COMPUTERIZED FOUR WHEEL ALIGNMENT	79 00
COMPUTERIZED WHEEL ALIGNMENT FORD AND DODGE TRUCKS	99.00

WE OFFER ALL GOODYEAR TIRES AT GOVERNMENT CONTRACT PRICES

BID #: B122028
OPEN: 07/31/2012
TIME: 10:00 AM

SPECIAL PROVISIONS
VEHICLE REPAIRS
GALVESTON COUNTY, TEXAS

BID FORM

The Firm Of McREE Ford
2800 Gulf Freeway
Dickinson, Texas 77539

Hereby agrees to provide the requested supplies and services as defined in the bid, attachments thereto, and

Addendum No _____ dated _____, No _____ dated _____, No _____ dated _____

CONDITIONS OF THE INVITATION TO BID: It shall be understood that by submission of this bid, the Bidder agrees to all of the conditions of the Invitation to Bid dated **July31, 2012** and any Addenda issued thereto and referenced above.

BIDDER MUST SIGN HERE BELOW:

By signing here, the firm does hereby attest that it has fully read the instructions, conditions and general and special provisions and understands them

Firm Name McREE Ford

Authorized Signature: [signature]

Name & Title Printed: MITCHEL DALE PRESIDENT

Telephone No. 281-337-1529 FAX No 281-337-7096

E-Mail Address MDALE@MCREEFORD.COM

Date JULY 25, 2012

EXCEPTIONS (If no exceptions are taken, state NONE)

SEE ATTACHED SCHEDULE.

Bidder shall use this form to provide the information for notice

1 Contact information for notice

Name TIM ALLEN

Address 2800 Gulf Freeway Dickinson, Texas 77539

Telephone Number 281-337-1529 Facsimile number 281-534-0930

BID #: B122028
OPEN: 07/31/2012
TIME: 10:00 AM

SPECIAL PROVISIONS
VEHICLE REPAIRS
GALVESTON COUNTY, TEXAS

2 If a copy of notice is requested, please complete below

Name ~~Fine Allen~~ Carter Dale
Address 2800 Gulf Freeway Dickinson, Texas 77539

Telephone Number 281-337-1529 Facsimile number 281-534-0930

3 If second or more copies are requested for notice, please supplement this form and clearly mark the supplement as "Supplementary Notice Information"

Bidder to submit reference information. Bidder shall use this form to provide minimum required reference information If Bidder wishes to provide more than the minimum, Bidder should supplement this form and should clearly mark the supplement as "Supplementary Reference Information"

1 References who can attest to the Bidder's capability to carry out the requirements set forth in this bid

Name of Organization Ford Motor Credit
Name of Person
Title of individual within Organization, if applicable
Business address P.O. Box 152496 Irving, Texas 75105-2496

Telephone Number Facsimile number

Name of Organization Liggio's Tire & Auto
Name of Person
Title of individual within Organization, if applicable
Business address 2315 44th St. Dickinson, Texas 77539

Telephone Number Facsimile number.

Name of Organization Russell & Smith Ford
Name of Person
Title of individual within Organization, if applicable
Business address P.O. Box 20629 Houston, Texas 77025

Telephone Number Facsimile number

LINE ITEM DETAIL

VEHICLE REPAIRS

GALVESTON COUNTY, TEXAS

BID #: B122028
OPEN: 07/31/2012
10:00 AM

VENDOR ID 131029 MCREE FORD INC

Item No.	Product Code	Description	Quantity	Units	Catalog #	Unit Price	Extended Price
0001	93600	REPAIRS AS LISTED IN CHILTON FACTORY TIME-MAINLAND	1	HR		$ 65.00	$
0002	93600	OTHER REPAIRS AND SERVICE-MAINLAND	1	HR		$ 65.00	$
0003	93600	AFTER MARKET PARTS-RETAIL LESS MAINLAND	1	EA	RETAIL LESS 20 %	$	$
0004	93600	FACTORY PARTS-RETAIL LESS-MAINLAND	1	EA	RETAIL LESS 20 %	$	$
0005	93600	REPAIRS AS LISTED IN CHILTON FACTORY TIME - GALVESTON	1	HR	No Bid this Item -	$	$
0006	93600	OTHER REPAIRS AND SERVICES - GALVESTON	1	HR	No Bid this Item	$	$
0007	93600	AFTER MARKET PARTS - RETAIL LESS GALVESTON	1	EA	No Bid this Item	$	$
0008	93600	FACTORY PARTS - RETAIL LESS - GALVESTON	1	EA	No Bid this Item	$	$
0009	93600	N/A	1	EA		$	$

LINE ITEM DETAIL

VEHICLE REPAIRS

GALVESTON COUNTY, TEXAS

BID #: B122028
OPEN: 07/31/2012
10:00 AM

VENDOR ID 131029 MCREE FORD INC

Item No	Product Code	Description	Quantity	Units	Catalog #	Unit Price	Extended Price
0010	93600	N/A	1	EA	_____	$_____	$_____

Extended Price Total of all Item $_____

EXCEPTIONS TO BID CONDITIONS

In an effort to provide reduced pricing on certain maintenance items listed in the Special Provisions, listed below are package prices for these items.

1) Oil and filter change on gasoline engine vehicle. $ 36.95*
2) Oil and filter change on light duty diesel engine vehicle. $94.95*
3) Oil and filter change on 6 7 L diesel (not including Diesel Exhaust Fluid) $118.95*
4) Fuel Filter (gasoline engine) $49.95; (diesel engine) $99.95
5) Front or Rear Brakes (cars and light duty trucks, including Police Interceptor) $179.95
6) Battery (36 month free replacement – 100 month pro rata replacement – free towing – includes electrical system draw and battery load tests) $137.77 installed.

*Genuine Motorcraft OEM semi-synthetic oil and filter

We understand how important it is for a repair facility to be open when you need service and are happy to provide service availability at the following times.

Main Service Shop Hours : Monday – Friday 7:00 am till 6:00 pm, Saturday 8:00 – 3.00

Quick Lane Hours : Monday – Friday 7·00 am till 7:00 pm, Saturday 8:00 – 5 00

BID #: B122028
OPEN: 07/31/2012
TIME· 10.00 AM

SPECIAL PROVISIONS
VEHICLE REPAIRS
GALVESTON COUNTY, TEXAS

BID FORM

The Firm Of Galveston Battery + Electric Co Inc.
3502 Broadway
Galveston Texas 77550

Hereby agrees to provide the requested supplies and services as defined in the bid, attachments thereto and

Addendum No _____ dated _____, No _____ dated _____, No _____ dated _____

CONDITIONS OF THE INVITATION TO BID: It shall be understood that by submission of this bid, the Bidder agrees to all of the conditions of the Invitation to Bid dated **July31, 2012** and any Addenda issued thereto and referenced above

BIDDER MUST SIGN HERE BELOW

By signing here the firm does hereby attest that it has fully read the instructions, conditions and general and special provisions and understands them

Firm Name Galveston Battery & Electric Co Inc

Authorized Signature: [signature] V.P.

Name & Title Printed George Newman Jr V.P.

Telephone No 409 762 7551 FAX No 409 762 2909

E-Mail Address GBE Performance@Yahoo.com

Date 7-27-2012

EXCEPTIONS (If no exceptions are taken state NONE)

Oil, Chemicals and Batteries are subject to periodic price changes.

Bidder shall use this form to provide the information for notice

1 Contact information for notice

Name George Newman Jr

Address 3502 Broadway
Galveston TX 77550

Telephone Number 409 762-7551 Facsimile number 409 762-2909

BID #· B122028
OPEN: 07/31/2012
TIME: 10:00 AM

SPECIAL PROVISIONS
VEHICLE REPAIRS
GALVESTON COUNTY, TEXAS

2 If a copy of notice is requested, please complete below

Name _____

Address _____

_____

Telephone Number _____ Facsimile number _____

3 If second or more copies are requested for notice, please supplement this form and clearly mark the supplement as "Supplementary Notice Information "

Bidder to submit reference information. Bidder shall use this form to provide minimum required reference information If Bidder wishes to provide more than the minimum, Bidder should supplement this form and should clearly mark the supplement as ' Supplementary Reference Information "

1 References who can attest to the Bidder s capability to carry out the requirements set forth in this bid

Name of Organization City of Galveston
Name of Person David Smith
Title of individual within Organization, if applicable Shop Superintendent
Business address _____

_____

Telephone Number 409-797-3930 Facsimile number _____

Name of Organization Galveston Independent School District
Name of Person Dennis Bertolino
Title of individual within Organization, if applicable Director of Transportation
Business address _____

_____

Telephone Number 409-370-3860 Facsimile number _____

Name of Organization Jamaica Beach Fire Dept.
Name of Person Ian Fundling
Title of individual within Organization, if applicable _____
Business address _____

_____

Telephone Number 409-761-0318 Facsimile number _____

LINE ITEM DETAIL

VEHICLE REPAIRS

GALVESTON COUNTY, TEXAS

BID # B122028
OPEN: 07/31/2012
10:00 AM

VENDOR ID Galveston Battery & Electric Inc.

Item No	Product Code	Description	Quantity	Units	Catalog #	Unit Price	Extended Price
0001	93600	REPAIRS AS LISTED IN CHILTON FACTORY TIME-MAINLAND	1	HR		$	$ MAINLAND
0002	93600	OTHER REPAIRS AND SERVICE-MAINLAND	1	HR		$	$ MAINLAND
0003	93600	AFTER MARKET PARTS-RETAIL LESS MAINLAND	1	EA		$	$ MAINLAND
0004	93600	FACTORY PARTS-RETAIL LESS-MAINLAND	1	EA		$	$ MAINLAND
0005	93600	REPAIRS AS LISTED IN CHILTON FACTORY TIME - GALVESTON	1	HR		$ 75.00/hr	$ 75.00/hr
0006	93600	OTHER REPAIRS AND SERVICES - GALVESTON	1	HR		$ 65.00/hr	$ 65.00/hr
0007	93600	AFTER MARKET PARTS - RETAIL LESS GALVESTON	1	EA		$ Retail Less 30%	$ Retail Less 30%
0008	93600	FACTORY PARTS - RETAIL LESS - GALVESTON	1	EA		$ Retail Less 20%	$ Retail Less 20%
0009	93600	N/A	1	EA		$	$

LINE ITEM DETAIL

VEHICLE REPAIRS

GALVESTON COUNTY, TEXAS

BID # B122028
OPEN. 07/31/2012
10:00 AM

VENDOR ID Galveston Battery & Electric Inc.

Item No	Product Code	Description	Quantity	Units	Catalog #	Unit Price	Extended Price
0010	93600	N/A	1	EA		$	$

Extended Price Total of all Item $ Return less 10-30%

BID #: B122028
OPEN: 07/31/2012
TIME: 10:00 AM

SPECIAL PROVISIONS
VEHICLE REPAIRS
GALVESTON COUNTY, TEXAS

BID FORM

The Firm Of Classic Ford
7700 Broadway
Galveston, Tx

Hereby agrees to provide the requested supplies and services as defined in the bid, attachments thereto, and

Addendum No _____ dated _____, No _____ dated _____, No _____ dated _____

CONDITIONS OF THE INVITATION TO BID: It shall be understood that by submission of this bid, the Bidder agrees to all of the conditions of the Invitation to Bid dated **July31, 2012** and any Addenda issued thereto and referenced above

BIDDER MUST SIGN HERE BELOW:

By signing here, the firm does hereby attest that it has fully read the instructions, conditions and general and special provisions and understands them

Firm Name Classic Ford

Authorized Signature: [signature]

Name & Title Printed Kent Neubauer Service Manager

Telephone No 409-761-2050 FAX No 409-744-2433

E-Mail Address KNeubauer@classicgalveston.com

Date 7/30/12

EXCEPTIONS (If no exceptions are taken, state NONE)

Bidder shall use this form to provide the information for notice

1 Contact information for notice

Name Kent Neubauer

Address 8020 Broadway
Galveston, Tx 77554

Telephone Number 409-744-5711 Facsimile number 409-744-2433

BID #: B122028
OPEN: 07/31/2012
TIME: 10:00 AM

SPECIAL PROVISIONS
VEHICLE REPAIRS
GALVESTON COUNTY, TEXAS

2 If a copy of notice is requested, please complete below

Name _____

Address _____

_____

Telephone Number _____ Facsimile number _____

3 If second or more copies are requested for notice, please supplement this form and clearly mark the supplement as "Supplementary Notice Information "

Bidder to submit reference information. Bidder shall use this form to provide minimum required reference information If Bidder wishes to provide more than the minimum, Bidder should supplement this form and should clearly mark the supplement as "Supplementary Reference Information "

1 References who can attest to the Bidder's capability to carry out the requirements set forth in this bid

Name of Organization Ford Motor Company
Name of Person Todd Seagren
Title of individual within Organization, if applicable Parts + Service Operations Manager
Business address 763 N. San Houston Pkwy East, Suite 700
Houston, Tx 77060
Telephone Number 832-689-0601 Facsimile number 888-564-5356

Name of Organization Moody National Bank
Name of Person Vic Pearson
Title of individual within Organization, if applicable President
Business address 2302 Post office
Galveston, Tx
Telephone Number 409-765-5561 Facsimile number _____

Name of Organization Galveston College
Name of Person Tim Seltzer
Title of individual within Organization, if applicable Director of Facilities
Business address 4015 Ave Q
Galveston, Tx 77550
Telephone Number 409 944-1365 Facsimile number 409-944-1522

LINE ITEM DETAIL

VEHICLE REPAIRS

GALVESTON COUNTY, TEXAS

BID #: B122028
OPEN: 07/31/2012
10:00 AM

VENDOR ID 714252 CLASSIC AUTOPLEX GALVESTON

Item No	Product Code	Description	Quantity	Units	Catalog #	Unit Price	Extended Price
0001	93600	REPAIRS AS LISTED IN CHILTON FACTORY TIME-MAINLAND	1	HR		$	$
0002	93600	OTHER REPAIRS AND SERVICE-MAINLAND	1	HR		$	$
0003	93600	AFTER MARKET PARTS-RETAIL LESS MAINLAND	1	EA		$	$
0004	93600	FACTORY PARTS-RETAIL LESS-MAINLAND	1	EA		$	$
0005	93600	REPAIRS AS LISTED IN CHILTON FACTORY TIME - GALVESTON	1	HR		$ 54.00	$
0006	93600	OTHER REPAIRS AND SERVICES - GALVESTON	1	HR		$ 54.00	$
0007	93600	AFTER MARKET PARTS - RETAIL LESS GALVESTON	1	EA		25%	$
0008	93600	FACTORY PARTS - RETAIL LESS - GALVESTON	1	EA		25%	$
0009	93600	N/A	1	EA		$	$

LINE ITEM DETAIL

VEHICLE REPAIRS

GALVESTON COUNTY, TEXAS

BID #: B122028
OPEN: 07/31/2012
10:00 AM

VENDOR ID 714252 CLASSIC AUTOPLEX GALVESTON

Item No	Product Code	Description	Quantity	Units	Catalog #	Unit Price	Extended Price
0010	93600	N/A	1	EA	_____	$_____	$_____

Extended Price Total of all Item $_____

EXCEPTIONS TO BID CONDITIONS

All routine maintenance services will be done at menu pricing or the hourly bid amount, whichever is less cost to Galveston County

Oil & filter changes on all county cars will be done at $27 50 and on county trucks will be $30 00 (except on diesels)

Thanks,

Kent Neubauer
Service Manager
Classic Ford-Toyota

www.classicgalveston.com
8020 Broadway * Galveston, TX 77554 * (409)744-5711 * (800) 299-5711

BID#: B122028
OPEN: 07/31/2012
TIME: 10:00 AM

INVITATION TO BID
VEHICLE REPAIRS
GALVESTON COUNTY, TEXAS

Sealed bids in **sets of eight (8), one (1) original and seven (7) copies** will be received in the office of the County Purchasing Agent until **10:00 AM** on **07/31/2012** and opened immediately in that office in the presence of the County Auditor and the Purchasing Agent. Any proposal received after **10:00 AM** on the date specified will be returned unopened.

All bids must be marked on the outside of the envelope:

Bid#: B122028 VEHICLE REPAIRS

Bidders name, return address, and the enclosed label should be prominently displayed on the envelope. Pricing will be lump sum or as noted on bid sheet.

Specifications can be obtained on application at the office of the County Purchasing Agent, located in the Galveston County Courthouse, 722 Moody Avenue (21st Street), Fifth (5th) Floor, Galveston, Texas.

Bids will be either lump sum or unit prices as shown on the bid sheet, if applicable. The net price will be delivered to Galveston County, including all freight or shipping charges. The County is tax exempt and no taxes should be included in your proposal.

Upon satisfaction of contractual terms (e.g., goods delivered in promised condition, services rendered as agreed, etc.), vendor is to be paid via Galveston County's normal accounts payable process.

Sealed bids are to be delivered to the County Purchasing Agent at the Galveston County Courthouse, 722 Moody Avenue (21st Street), Fifth (5th) Floor, Galveston, Texas 77550.

Commissioners' Court reserves the right to waive any informality and to reject any and all bids and to accept the bid or bids which, in its opinion, is most advantageous to the County.

Rufus G. Crowder, CPPO, CPPB
Purchasing Agent
Galveston County

GENERAL PROVISIONS
VEHICLE REPAIRS
GALVESTON COUNTY, TEXAS

1 BID PACKAGE

The invitation to bid, general and special provisions, drawings, specifications/line item details, contract documents and the bid sheet are all considered part of this bid package. Bids must be submitted in ***sets of eight (8), one (1) original and seven (7) copies*** *on the forms provided by the County, including the bid sheet completed in its entirety and signed by an authorized representative by original signature. Failure to complete and sign the bid sheet/contract page(s) may disqualify the bid from being considered by Commissioners Court. Any individual signing on behalf of the bidder expressly affirms that he or she is duly authorized to tender this bid and to sign the bid sheet/contract under the terms and conditions in this bid. Bidder further understands that the signing of the contract shall be of no effect unless subsequently awarded and the contract properly executed by Commissioners Court. All figures must be written in ink or typed. Figures written in pencil or with erasures are not acceptable. However, mistakes may be crossed out, corrections inserted, and initialed in ink by the individual signing the bid. If there are discrepancies between unit prices quoted and extensions, the unit price will prevail. Each bidder is required to thoroughly review this entire bid packet to familiarize themselves with the bid procedures, the plans and specifications for the requested work as well as the terms and conditions of the contract the successful bidder will execute with the County.*

2 COMPETITIVENESS AND INTEGRITY

To prevent biased evaluations and to preserve the competitiveness and integrity of such acquisition efforts bidders are to direct all communications regarding this bid to the Galveston County Purchasing Agent, unless otherwise specifically noted.

Do not contact the requesting department. Attempts by offering firms to circumvent this requirement will be viewed negatively and may result in rejection of the offer of the firm found to be in non-compliance.

All questions regarding this Invitation to Bid must be submitted in writing to:

Rufus G. Crowder, CPPO, CPPB
Galveston County Purchasing Agent
722 Moody, Fifth (5th) Floor
Galveston, Texas 77550
Fax: (409) 621-7987
E-mail: rufus.crowder@co.galveston.tx.us

An authorized person from the submitting firm must sign all bids. This signature acknowledges that the bidder has read the bid documents thoroughly before submitting a bid and will fulfill the obligations in accordance to the terms, conditions, and specifications.

Please carefully review this Invitation to Bid. It provides specific information necessary to aid participating firms in formulating a thorough response.

3 TIME FOR RECEIVING BIDS

Bids received prior to the submission deadline will be maintained unopened until the specified time for opening. If the bidder fails to identify the Bid Number on the outside of the envelope as required, the Purchasing Agent will open the envelope for the sole purpose of identifying the bid number for which the submission was made. The envelope will then be resealed. No liability will attach to a County office or employee for the premature opening of a bid. If you do not submit a bid, return this Invitation to Bid and state reason, otherwise your name may be removed from our mailing list.

4 BID OPENING

The names of the bidders and the pricing will be read aloud at the bid opening. Sealed bids will be received in the office of the County Purchasing Agent and opened immediately in that office in the presence of the County Auditor and the Purchasing Agent. No bid may be withdrawn for a period of sixty (60) calendar days of the bid opening date.

GENERAL PROVISIONS
VEHICLE REPAIRS
GALVESTON COUNTY, TEXAS

5 REJECTION OF BIDS

The County acting through its Commissioners Court reserves the right to (1) reject any and all bids and waive any informality in the bids received (2) disregard the bid of any bidder determined to be non responsive to the provisions contained herein

6. RESTRICTIVE OR AMBIGUOUS SPECIFICATIONS

It is the responsibility of the prospective bidder to review the entire invitation to bid packet and to notify the Purchasing Department if the specifications are formulated in a manner that would restrict competition or appear ambiguous Any such protest or question(s) regarding the specifications or bid procedures must be received in the Purchasing Department not less than seventy-two (72) hours prior to the time set for bid opening Vendors are to bid as specified herein or bid an approved equal The mention of any brand name in the specifications is not intended to be restrictive, but is intended to describe the general features and requirements (or equivalent) that Galveston County is seeking

7. SUBSTITUTES

It is not the County's intent to discriminate against any materials of equal merit to those specified, however should the bidder desire to use any substitutions prior written approval shall be obtained from the County Purchasing Agent sufficiently in advance in order that an addendum might be issued

8 EXCEPTIONS TO BID

The bidder will list on a separate sheet of paper any exceptions to the conditions of the bid This sheet will be labeled, "Exceptions to Bid Conditions" and will be attached to the bid If no exceptions are stated it will be understood that all general and specific conditions will be complied with without exception

9. PRICING

Bids will be either lump sum or unit prices as shown on the bid sheet The net price will be delivered to Galveston County including all freight or shipping charges The County is tax exempt and no taxes should be included in your bid

Cash discount must be shown on bid otherwise prices will be considered net Unless prices and all information requested are complete bid may be disregarded and given no consideration

In case of default by the contractor the County of Galveston may procure the articles or services from other sources and may deduct from any monies due or that may thereafter become due to the contractor the difference between the price named in the contract of purchase order and the actual cost thereof to the County of Galveston Prices paid by the County of Galveston shall be considered the prevailing market price at the time such purchase is made Periods of performance may be extended if the facts as to the cause of delay justify such extension in the opinion of the Purchasing Agent and the Commissioners Court

10. PROCUREMENT CARD

The County of Galveston participates in a Procurement Card (P-Card) program that allows payments made to the vendor by credit card This method normally results in substantially faster bill payments sometimes within three (3) to five (5) days of the actual transaction date If your company will accept payment via credit card (Visa MasterCard), please notate this in you bid submittal

11 TAX EXEMPTION

Pursuant to Section 151 309 of the Texas Tax Code Galveston County qualifies for exemption from sales excise and use taxes imposed under the Limited Sales Excise and Use Tax Act which is codified at Chapter 151 of the Texas Tax Code In accordance with Section 151 309 a taxable item sold leased or rented to or stored used or consumed by the County is exempt from the taxes imposed under Chapter 151 Section 151 311 of the Texas Tax Code lists its requirements for tax exemptions on taxable items incorporated into or used for the improvement of realty of an exempt entity Section 151 3111 lists its requirements for tax exemptions on certain services Contractor is cautioned that this

GENERAL PROVISIONS
VEHICLE REPAIRS
GALVESTON COUNTY, TEXAS

RFP provision simply highlights some statutory qualifying exemptions from the sale and use taxes imposed under Chapter 151. If Contractor believes all or a portion of its costs are exempt from taxes imposed under Chapter 151 of the Texas Tax Code, it may request a certificate of tax exemption by submitting a written request for such to the County Purchasing Agent. Additionally, information regarding eligibility for exemption from taxes imposed under Chapter 151 may be obtained through the Office of the State of Texas Comptroller of Public Accounts, whose website is http://www.window.state.tx.us/

12. PASS THROUGH COST ADJUSTMENTS

Except in instances of extreme extenuating circumstances Vendor prices shall remain firm throughout the Contract period and any renewals. Examples of extreme extenuating circumstances include such situations as a nationwide rail strike, oil shortage, or oil embargos.

In extreme extenuating circumstances Vendors may be allowed to temporarily "pass through" additional costs they are forced to incur through no fault of their own. A request for a pass through cost increase will not be considered unless a Vendor's cost for his product exceeds 10% over the original cost for the product. Also, the increase in cost must be nationwide and consistent for a minimum period of sixty (60) days. If a Vendor thinks he will be asking for a pass through cost adjustment during the term of his contract the original cost of his product to him must be stated in Vendor's original bid.

A request for a pass through cost does not guarantee that one will be granted. Vendors must submit such information on each request as is required by the County Purchasing Agent. The County Purchasing Agent will review each request on a case by case basis and determine the appropriateness of each request as well as amount and duration of increase. Vendors will not be permitted any additional compensation for mark-ups or profits based on the increase in price. Rather, such additional compensation will be limited to the actual increase in original cost to the Vendor as such increase is reflected by the original cost stated in the bid. But in no event will the amount of additional compensation exceed 25% increase in

Vendor's original cost for his product as such cost is reflected in Vendor's original bid or the duration exceed a period of sixty (60) days. In addition, should, during the period of the pass through, cost return to normal or decrease to below pre pass through prices, appropriate downward adjustments will be made. No more than one pass through adjustment will be permitted per year.

13. MODIFICATION OF BIDS

A bidder may modify a bid by letter at any time prior to the submission deadline for receipt of bids. Modification requests must be received prior to the submission deadline. Modifications made before opening time must be initialed by bidder guaranteeing authenticity. Bids may not be amended or altered after the official opening with the single exception that any product literature and/or supporting data required by the actual specifications, if any, will be accepted at any time prior to the Commissioners' Court consideration of same.

14. AWARD OF BIDS

The award will be made to the bidder who is determined to be the lowest bidder demonstrating the best value and ability to fulfill the requirements of the bid. The prices proposed will be considered firm and cannot be altered after the submission deadline.

The criteria utilized for determining responsibility of bidder(s) includes, but is not limited to: the bidder's experience, skill, ability, business judgment, financial capacity, integrity, honesty, possession of the necessary facilities or equipment, previous performance, reputation, promptness, and any other factor deemed relevant by the County. The bidder shall furnish any information requested by the County in order for the County to determine whether a bidder is responsible.

In determining and evaluating the best bid, the pricing may not necessarily be controlling, but quality, equality, efficiency, utility, general terms, delivery, suitability of the service offered, and the reputation of the service in general use will also be considered with any other relevant items. The Commissioners' Court shall be the sole judge in the determination of these matters.

GENERAL PROVISIONS
VEHICLE REPAIRS
GALVESTON COUNTY, TEXAS

Each bidder by submitting a bid agrees that if their bid is accepted by the Commissioners Court such bidder will furnish all items and services upon which prices have been tendered and upon the terms and conditions in this bid and contract

The contractor shall commence work only after the transmittal of a fully executed purchase order, or contract and after receiving written notification to proceed from Galveston County The contractor will perform all services indicated in the bid in compliance with this contract

Neither department heads nor elected officials are authorized to sign any binding contracts or agreements prior to being properly placed on the Commissioners Court agenda and approved in open court Department heads and other elected officials are not authorized to enter into any type of agreement or contract on behalf of Galveston County Only the Commissioners Court acting as a body may enter into a contract on behalf of Galveston County Additionally department heads and other elected officials are not authorized to agree to any type of supplemental agreements or contracts for goods or services Supplemental agreements are subject to review by the Galveston County Legal Department prior to being signed by the County s authorized representative

The County of Galveston reserves the right to accept bids on individual items listed or group items or on the bid as a whole to reject any and all bids to waive any informality in the bids and to accept the bid that appears to be in the best interest of the County

Notice of contract award will be made within ninety (90) days of opening of bids to the lowest responsive and responsible contractor whose bid complies with all the requirements in this Invitation to Bid unless special consideration is granted by the Commissioners Court

Contractor shall submit to the County for approval within ten (10) days from notice of contract award all Certificates of Insurance evidencing the required coverage as described under insurance in the schedule of the Invitation to Bid item 29 page 7 Proof of Insurance

The contractor shall not commence work under these terms and conditions of the contract until all applicable Certificates of Insurance, Performance and Payment Bonds and Irrevocable Letter of Credit (if required) have been approved by the County of Galveston and he/she has received notice to proceed in writing and an executed copy of the contract from the County of Galveston Purchasing Agent

15 RESULTANT CONTRACT

The resultant contract if applicable shall become effective upon the Commissioners Court execution of the same The contract documents shall consist of the contract the general and special provisions the drawings bid package any addenda issued and any change orders issued during the work If applicable to the attached bid, bidder must sign three (3) original contracts and return with their bid submittal

16 CONTRACT TERM

The term of the resultant contract will begin on the date of execution by the Commissioners' Court and will terminate on the date specified in the resultant contract unless terminated earlier as herein set forth

17. TERMINATION FOR DEFAULT

Failure of either party in the performance of any of the provisions of this contract shall constitute a breach of contract in which case, either party may require corrective action within ten (10) days from date of receipt of written notice citing the exact nature of such breach Failure of the party being notified to take corrective action within the prescribed ten (10) days or failure to provide written reply of why no breach has occurred shall constitute a Default of Contract

GENERAL PROVISIONS
VEHICLE REPAIRS
GALVESTON COUNTY, TEXAS

All notices relating to default by Bidder of the provisions of the contract shall be issued by County by its Legal Department and all replies shall be made in writing to the Galveston County Legal Department. Notices issued by or issued to anyone other than the Galveston County Legal Department shall be null and void and shall be considered as not having been issued or received.

Galveston County reserves the right to enforce the performance of this contract in any manner prescribed by law in the event of breach or default of this contract, and may contract with another party, with or without solicitation of bids or bids or further negotiations. At a minimum, bidder shall be required to pay any difference in service or materials, should it become necessary to contract with another source, plus reasonable administrative costs and attorney fees.

In the event of Termination for Default, Galveston County, its agents or representatives shall not be liable for loss of any profits anticipated to be made by bidder.

No waiver by either party of any event of default under this agreement shall operate as a waiver of any subsequent default under the terms of this agreement.

County reserves the right to terminate this contract immediately in the event bidder:

- Fails to meet delivery or completion schedules,
- Fails to otherwise perform in accordance with the accepted bid and the contract.

18 TERMINATION FOR CONVENIENCE

County may terminate this contract upon at least thirty (30) days prior written notice for it's convenience or for any reason deemed by the County to serve the public interest. County may terminate this contract upon thirty (30) days prior written notice for any reason resulting from any governmental law, order, ordinance, regulations or court order. In no event shall County be liable for loss of any profits anticipated to be made hereunder by bidder should this contract be terminated early.

19 FORCE MAJEURE

If by reason of Force Majeure either Party shall be rendered unable, wholly or in part, to carry out its responsibilities under this contract by any occurrence by reason of Force Majeure, then the Party unable to carry out its responsibility shall give the other Party notice and full particulars of such Force Majeure in writing within a reasonable time after the occurrence of the event, and such notice shall suspend the Party's responsibility for the continuance of the Forced Majeure claimed, but for no longer period.

Force Majeure means acts of God, floods, hurricanes, tropical storms, tornadoes, earthquakes, or other natural disasters, acts of a public enemy, acts of terrorism, sovereign conduct, riots, civil commotion, strikes or lockouts and other causes, that are not occasioned by either Party's conduct which by the exercise of due diligence the Party is unable to overcome and which substantially interferes with operations.

20 ESTIMATED QUANTITIES

Any references to quantities shown in the Invitation to Bid are an estimate only. Since the exact quantities cannot be predetermined, the County reserves the right to adjust quantities as deemed necessary to meet its requirements.

21 CONTRACTOR INVESTIGATION

Before submitting a bid, each contractor shall make all investigations and examinations necessary to ascertain all site conditions and requirements affecting the full performance of the contract and to verify any representations made by the County upon which the contractor will rely. If the contractor receives an award as a result of its bid submission, failure to have made such investigations and examinations will in no way relieve the contractor from its obligation to comply in every detail with all provisions and requirements of the contract, nor will a plea of ignorance of such conditions and requirements be accepted as a basis for any claim whatsoever by the contractor for additional compensation.

GENERAL PROVISIONS
VEHICLE REPAIRS
GALVESTON COUNTY, TEXAS

22 NO COMMITMENT BY COUNTY OF GALVESTON

This Invitation to Bid does not commit the County of Galveston to award any costs or pay any costs or to award any contract or to pay any costs associated with or incurred in the preparation of a bid to this request or to procure or contract for services or supplies

23 SINGLE BID RESPONSE

If only one bid is received in response to the Invitation to Bid, a detailed cost bid may be requested of the single contractor A cost/price analysis and evaluation and/or audit may be performed of the cost bid in order to determine if the price is fair and reasonable

24 REJECTION/DISQUALIFICATION OF BIDS

Galveston County reserves the right to reject any or all bids in whole or in part received by reason of this bid package and may discontinue its efforts for any reason under this bid package at any time prior to actual execution of the contract by the County Bidders may be disqualified and rejection of bids may be recommended to the Commissioners Court for any of (but not limited to) the following causes

- A Failure to use the bid form furnished by the County, if applicable
- B Lack of signature by an authorized representative that can legally bind the company on the bid form
- C Failure to properly complete the bid
- D Bids that do not meet the mandatory requirements
- E Evidence of collusion among bidders

25. CHANGES IN SPECIFICATIONS

If it becomes necessary to revise any part of this bid a written notice of such revision will be provided to all bidders in the form of addenda The County is not bound by any oral representations clarifications or changes made in the written specifications by the County s employees unless such clarification or change is provided to bidders in a written addendum from the Purchasing Agent

The County of Galveston reserves the right to revise or amend the specifications up to the time set for opening of bids Such revisions and amendments, if any, shall be announced by amendments to the solicitation Copies of such amendments shall be furnished to all prospective contractors Prospective contractors are defined as those contractors listed on the County s Invitation to Bid list for this material/service or who have obtained his documents subsequent to the advertisement If revisions and amendments require changes in quantities or prices proposed or both the date set for opening of bids may be postponed by such number of days as in the opinion of the County shall enable contractors to revise their bids In any case the bid opening shall be at least five working days after the last amendment and the amendment shall include an announcement of the new date if applicable for the opening of bids

26 BID DISCLOSURES

The names of those who submitted bids will not be made public information until after an award are made by Commissioners Court No price or staffing information will be released Bidders are requested to withhold all inquiries regarding their bid or other submissions until after an award is made No communication is to be had with any County employee other than the Purchasing Agent regarding whether a bid was received Violations of this provision may result in the rejection of a bid

27 PROTEST

Any actual or prospective bidder who is allegedly aggrieved in connection with the solicitation or award of bid may protest The protest will be submitted in writing to the Purchasing Agent within seven (7) days after such aggrieved person knows of or should have known of the facts giving rise thereto If the protest is not resolved by mutual agreement the Purchasing Agent will promptly issue a decision in writing to the protestant If the protestant wishes to appeal the decision rendered by the Purchasing Agent such appeal must be made to the Commissioners Court through the Purchasing Agent The decision of the Court will be final The Court need not consider protests unless this procedure is followed

GENERAL PROVISIONS
VEHICLE REPAIRS
GALVESTON COUNTY, TEXAS

28. WITHDRAWAL OF BID

Bidders may request withdrawal of a sealed bid prior to the scheduled bid opening time provided the request for withdrawal is submitted to the Purchasing Agent in writing. No bids may be withdrawn for a period of sixty (60) calendar days after opening of the bids.

29. INDEMNIFICATION

The contractor shall agree to assume all risks and responsibility for, and agrees to indemnify, defend, and save harmless, the County of Galveston, its elected and appointed officials and department heads, and its agents and employees from and against all claims, demands, suits, actions, recoveries, judgments, and costs and expenses including reasonable attorney's fees for the defense thereof in connection therewith on account of the loss of life, property or injury or damage to the person which shall arise from contractor's operations under this contract, its use of County facilities and/or equipment or from any other breach on the part of the contractor, its employees, agents or any person(s) in or about the County's facilities with the expressed or implied consent of the County. Contractor shall pay any judgment with cost which may be obtained against Galveston County resulting from contractor's operations under this contract.

Contractor agrees to indemnify and hold the County harmless from all claims of subcontractors, laborers incurred in the performance of this contract. Contractor shall furnish satisfactory evidence that all obligations of this nature herein above designated have been paid, discharged or waived. If Contractor fails to do so, then the County reserves the right to pay unpaid bills of which County has written notice direct and withhold from Contractor's unpaid compensation a sum of money reasonably sufficient to liquidate any and all such lawful claims.

30. PROOF OF INSURANCE

Successful bidder agrees to keep in full force and effect a policy of public liability and property damage insurance issued by a casualty company authorized to do business in the State of Texas and in standard form approved by the Board of Insurance Commissioners of the State of Texas with coverage provision insuring the public from any loss or damage that may arise to any person or property by reason of services rendered by successful bidder and providing that the amount by reason of services limits of not less than the following sums:

A. For damages arising out of bodily injury to or death of one person in any one accident –
ONE HUNDRED THOUSAND AND NO/100 ($100,000.00) DOLLARS
B. For damages arising out of bodily injury to or death of two or more persons in any one accident –
THREE HUNDRED THOUSAND AND NO/100 ($300,000.00) DOLLARS
C. For any injury to or destruction of property in any one accident
ONE HUNDRED THOUSAND AND NO/100 ($100,000.00) DOLLARS

Successful bidder shall carry in full force Workers' Compensation Insurance Policy(ies) if there is more than one employee for all employees, including but not limited to full time, part time, and emergency employees employed by the successful bidder. Current insurance Certificates certifying that such policies as specified above are in full force and effect shall be furnished by successful bidder to the County.

Galveston County shall be listed as the additional insured on policy certificates and shall be notified of any changes to the policy during the contractual period.

31. CONFLICT OF INTEREST DISCLOSURE REPORTING

Proposer may be required under Chapter 176 of the Texas Local Government Code to complete and file a conflict of interest questionnaire (CIQ Form). If so, the completed CIQ Form must be filed with the County Clerk of Galveston County, Texas.

GENERAL PROVISIONS
VEHICLE REPAIRS
GALVESTON COUNTY, TEXAS

If Proposer has an employment or other business relationship with an officer of Galveston County or with a family member of an officer of Galveston County that results in the officer or family member of the officer receiving taxable income that exceeds $2,500.00 during the preceding 12-month period, then Proposer **MUST** complete a CIQ Form and file the original of the CIQ Form with the County Clerk of Galveston County.

If Proposer has given an officer of Galveston County or a family member of an officer of Galveston County one or more gifts with an aggregate value of more than $250.00 during the preceding 12-months, then Proposer **MUST** complete a CIQ Form and file the original of the CIQ Form with the County Clerk of Galveston County.

The Galveston County Clerk has offices at the following locations:

Galveston County Clerk
Galveston County Justice Center, Suite 2001
600 59th Street
Galveston, Texas 77551

Galveston County Clerk
North County Annex, 1st Floor
174 Calder Road
League City, Texas 77573

Again, if Proposer is required to file a CIQ Form, the original completed form is filed with the Galveston County Clerk **(not the Purchasing Agent)**.

For Proposer's convenience, a blank CIQ Form is enclosed with this proposal. Blank CIQ Forms may also be obtained by visiting the Galveston County Clerk's website and/or the Purchasing Agent's website – both of these web sites are linked to the Galveston County homepage, at http://www.co.galveston.tx.us.

As well, blank CIQ Forms may be obtained by visiting the Texas Ethics Commission website, specifically at http://www.ethics.state.tx.us/whatsnew/conflict_forms.htm.

Chapter 176 specifies deadlines for the filing of CIQ Forms (both initial filings and updated filings).

It is Proposer's sole responsibility to file a true and complete CIQ Form with the Galveston County Clerk if Proposer is required to file by the requirements of Chapter 176. Proposer is advised that it is an offense to fail to comply with the disclosure reporting requirements dictated under Chapter 176 of the Texas Local Government Code.

If you have questions about compliance with Chapter 176, please consult your own legal counsel. Compliance is the individual responsibility of each person, business, and agent who is subject to Chapter 176 of the Texas Local Government Code.

32 **ENTIRETY OF AGREEMENT AND MODIFICATION**

This contract contains the entire agreement between the parties. Any prior agreement, promise, negotiation or representation not expressly set forth in this contract has no force or effect. Any subsequent modification to this contract must be in writing, signed by both parties.

An official representative, employee, or agent of the County does not have the authority to modify or amend this contract except pursuant to specific authority to do so granted by the Galveston County Commissioners' Court.

GENERAL PROVISIONS
VEHICLE REPAIRS
GALVESTON COUNTY, TEXAS

33 NON-COLLUSION AFFIDAVIT

The contractor declares by signing and submitting a bid that the bid is not made in the interest of, or on behalf of any undisclosed person partnership, company association organization or corporation that the bid is genuine and not collusive or sham that the contractor has not directly or indirectly induced or solicited another contractor to put in a false or sham bid and has not directly or indirectly colluded conspired connived, or agreed with any contractor or anyone else to put in a sham bid of that anyone shall refrain from bidding that the contractor has not in any manner directly or indirectly sought by agreement communications or conference with anyone to fix the bid price of the contractor of any other bidder or to fix any overhead profit or cost element of the bid price or of that of any other contractor or to secure any advantage against the public body awarding the contract of anyone interested in the proposed contract that all statements contained in the bid are true and further that the contractor has not directly or indirectly, submitted his or her bid price or any breakdown thereof or the contents thereof or divulged information or data relative thereto or paid, and will not pay any fee to any cooperation, partnership company association organization, bid depository or to any member or agent thereof to effectuate a collusive or sham bid

No negotiations decisions or actions shall be initiated by any company as a result of any result of any verbal discussion with any County employee prior to the opening of responses to this Invitation to Bid

No officer or employee of the County of Galveston and no other public or elected official or employee who may exercise any function or responsibilities in the review or approval of this undertaking shall have any personal or financial interest direct or indirect, in any contract or negotiation process thereof The above compliance request will be part of all County of Galveston contracts for this service

34. PROCUREMENT ETHICS

Galveston County is committed to the highest ethical standards Therefore, it is a serious breach of the public trust to subvert the public purchasing process by directing purchases to certain favored vendors or to tamper with the competitive bidding process whether it s done for kickbacks friendship or any other reason Since misuse of the purchasing power of a local government carries criminal penalties and many such misuses are from a lack of clear guidelines about what constitutes an abuse of office the Code of Ethics outlined below must be strictly followed

Galveston County also requires ethical conduct from those who do business with the county

CODE OF ETHICS – Statement of Purchasing Policy

Public employment is a public trust It is the policy of Galveston County to promote and balance the objective of protecting the County s integrity and the objective of facilitating the recruitment and retention of personnel needed by Galveston County Such policy is implemented by prescribing essential standards of ethical conduct without creating unnecessary obstacles to entering public office

Public employees must discharge their duties impartially so as to assure fair competitive access to governmental procurement by responsible contractors Moreover they should conduct themselves in such a manner as to foster public confidence in the integrity of the Galveston County procurement organization

To achieve this purpose it is essential that those doing business with Galveston County also observe the ethical standards prescribed herein

General Ethical Standards

It shall be a breach of ethics to attempt to realize personal gain through public employment with Galveston County by any conduct inconsistent with the proper discharge of the employee's duties

It shall be a breach of ethics to attempt to influence any public employee of Galveston County to breach the standards of ethical conduct set forth in this code

GENERAL PROVISIONS
VEHICLE REPAIRS
GALVESTON COUNTY, TEXAS

It shall be a breach of ethics for any employee of Galveston County to participate directly or indirectly in a procurement when the employee knows that

- The employee or any member of the employee's immediate family has a financial interest pertaining to the procurement
- A business or organization in which the employee or any member of the employee's immediate family has a financial interest pertaining to the procurement
- Any other person business or organization with which the employee or any member of the employee's immediate family is negotiating or has an arrangement concerning prospective employment is involved in the procurement

Gratuities
It shall be a breach of ethics to offer give or agree to give any employee of Galveston County or for any employee or former employee of Galveston County to solicit, demand accept or agree to accept from another person a gratuity or an offer of employment in connection with any decision approval disapproval, recommendation preparation of any part of a program requirement or purchase request influencing the content of any specification or procurement standard rendering of advice investigation auditing or in any other advisory capacity in any program requirement or a contract or subcontract or to any solicitation or bid therefore pending before this government

Kickbacks
It shall be a breach of ethics for any payment gratuity or offer of employment to be made by or on behalf of a subcontractor under a contract to the prime contractor or higher tier subcontractor for any contract for Galveston County or any person associated therewith as an inducement for the award of a subcontract or order

Contract Clause
The prohibition against gratuities and kickbacks prescribed above shall be conspicuously set forth in every contract and solicitation by Galveston County

Confidential Information
It shall be a breach of ethics for any employee or former employee of Galveston County to knowingly use confidential information for actual or anticipated personal gain or for the actual or anticipated gain of any person

35 **OPEN RECORDS**
Galveston County is required to adhere to the provisions of the Texas Public Information Act All information documentation and other material submitted by vendor in response to any solicitations or under any resulting contract thereof may be subject to public disclosure under the Texas Public Information Act (TX Gov t Code Chapter 552) Vendors are hereby notified that Galveston County strictly adheres to this statute and the interpretations thereof rendered by the Courts and/or Texas Attorney General s office Vendor shall be deemed to have knowledge of this law and how to protect their interests under it Exceptions to disclosure of information as provided by this statute are intended to protect legitimate interests of the County or vendor and are not intended to serve as a means to withhold or delay disclosure of information not covered by these exceptions

<u>If vendor considers any submitted information to be proprietary in nature, protected by trade secrets, or otherwise confidential said material should be clearly marked and conspicuously notated as such. Failure to do so shall not place any burden on the County of Galveston for the release of any material not abiding by this provision.</u>

GENERAL PROVISIONS
VEHICLE REPAIRS
GALVESTON COUNTY, TEXAS

36 **NOTICE**

Any notice required or permitted between the parties under this contract must be in writing and shall be delivered in person or mailed certified mail return receipt requested or may be transmitted by fax as follows

To the County at

Hon Mark A Henry County Judge
722 Moody
Second (2nd) Floor
Galveston Texas 77550
Fax (409) 765-2653

And to

Rufus G Crowder CPPO CPPB
Purchasing Agent
722 Moody Fifth (5th) Floor
Galveston Texas 77550
Fax (409) 621-7987

Harvey Bazaman
Director of County Legal
722 Moody Fifth (5th) Floor
Galveston, Texas 77550
Fax (409) 770-5560

BID #: B122028
OPEN: 07/31/2012
TIME: 10:00 AM

SPECIAL PROVISIONS
VEHICLE REPAIRS
GALVESTON COUNTY, TEXAS

SCOPE:
Galveston County is seeking qualified auto repair shops to repair vehicles for Galveston County Departments: one repair shop on Galveston Island and one repair shop on the Mainland. Both shops need not be owned by the same vendor. Vendor must submit price per man hour on the labor for the term of the contract. Labor rates will be charged based on "Chilton" factory time.

TERM:
It is the intent of the County to award a Vehicle Repairs contract for a period of one (1) year. The County may extend the contract on a year to year basis for up to two (2) additional one (1) year periods, provided such an extension is in the best interest of the County and mutually agreeable between both parties.

BIDDER'S QUALIFICATIONS:
All potential vendors shall be primarily engaged in the business of the repair of automobiles and are required to furnish evidence of having the necessary experience, ability, facilities, and financial resources to deliver the requested services as designated in the specifications mentioned herein.

No contract will be awarded except to responsible independent vendors who are capable of supplying vehicle repair services that are suitable for use in commercial applications.

Repair shops must be located in Galveston County, Texas. One (1) vendor will be selected for areas on the Mainland and one (1) vendor will be selected for Galveston Island.

Repair shops selected must be able to make repairs on all types of vehicles: trucks, cars, vans, 4X4's, RV's etc., and repair vehicles from all major manufacturers.

All parts used for repairs must meet or exceed the manufacturers original specifications (O.E.M.). After market parts may be used when available but must be suitable for their intended purpose and not cause the repaired item to be unsafe.

If repairs are going to require more than 48 hours, the referring County department must be notified.

Since most of the vehicles to be repaired are used by a law enforcement agency, repairs to these vehicles should take precedence over other vehicles being repaired.

Estimates of repairs must be issued before any work begins and a County Purchase Order must be issued prior to the beginning of work.

Vendor must warrant repairs to be acceptable to the Galveston County end-user departments.

Shops must be qualified to make repairs and provide services as follows:

Front and rear brakes

Replacement of U-joints

Water pumps

Heater Cores

SPECIAL PROVISIONS
VEHICLE REPAIRS
GALVESTON COUNTY, TEXAS

Belts and hoses

Bulbs

Thermostats

Oil

Fuel Filters

Repair/replacement of radiators

Transmission service repair

All types of air conditioning repairs

Alignments

Oil and filter changes

Tune-ups both major and minor

Front end work

Tie rod and tie rod ends

Bushings and bearings

Carburetor and fuel injection repairs

Rear end work

Fuel pump repair/replacement

Replacement of batteries alternators and wiring

Repairs/replacement to exhaust systems and other repairs normally with automobile and truck maintenance

Tire Repairs

WARRANTY
Successful bidder shall warrant that all items shall conform to the proposed specifications and/or all warranties as stated in the Uniform Commercial Code and be free from all defects in material workmanship and title

SPECIAL PROVISIONS
VEHICLE REPAIRS
GALVESTON COUNTY, TEXAS

INVOICES
Invoices must be itemized indicating all repairs and all parts used. Invoices must be submitted to

Galveston County Auditor's Office
Attn: Accounts Payable
P.O. Box 1418
Galveston, Texas 77553

Failure to submit invoices to the above address or failure to include the Purchase Order Number will result in delay in payment.

Vendor must accept purchase order numbers for specified supplies and equipment. Vendor shall not perform any work or release any supplies and/or equipment to any authorized representative of the County of Galveston unless a valid purchase order number issued by the office of the Galveston County Purchasing Agent accompanies the order or if vendor can comply with the provision as stated in the General Provisions, page 2, item 10, Procurement Card Program. Payment for any items issued without prior receipt of a valid purchase order number may become the sole responsibility of the successful vendor.

BID SUBMISSION.
Bidders must submit references and qualifications along with their bid. Questions that arise during the repair of County vehicles must be cleared through Galveston County's Fleet Manager, who for the purpose of this bid is

Charles Langford
Galveston County Fleet Manager
722 Moody – 6th Floor
Galveston, Texas 77550
(409) 765-2640

Qualification of vendors shall be determined after inspection of vendor's facilities by a Galveston County authorized Representative if deemed necessary.

Vendors must provide evidence of the employment of a minimum of four (4) full time employees, including at least three (3) full time mechanics.

Award will be made on basis of hourly rate and discount on parts. Award will also be based on the total sum price. In the case of errors in extensions, the unit price will prevail.

No taxes are to be added as Galveston County is exempt by statute.

If bidder does not wish to bid at the this time but wishes to remain on the bid list for this commodity, please submit a "NO BID" by the same time and at same location as stated for bidding.

If during the life of the contract, the successful bidders' net prices to other customers for vehicle repairs awarded therein are reduced below the contracted price, it is understood and agreed that the benefits of such reduction shall be extended to Galveston County.

SPECIAL PROVISIONS
VEHICLE REPAIRS
GALVESTON COUNTY, TEXAS

A price re-determination may be considered by Galveston County only at the anniversary date of the contract and shall be substained in writing (i.e. Manufacturers direct cost, postage rates, Railroad Commission Rates, etc.). The bidder's past experience of honoring contracts at the bid price will be an important consideration in the evaluation of the lowest and best bid. Galveston County reserves the right to accept or reject any and all of the price re-determinations, as it deems to be in the best interest of the County.

ANY REFFRENCES TO NAME BRANDS ARE FOR BIDDING PURPOSES ONLY

The remainder of this page intentionally left blank

BID # B122028
OPEN: 07/31/2012
TIME: 10:00 AM

SPECIAL PROVISIONS
VEHICLE REPAIRS
GALVESTON COUNTY, TEXAS

BID FORM

The Firm Of _____

_____

_____

Hereby agrees to provide the requested supplies and services as defined in the bid attachments thereto and

Addendum No _____ dated _____ No _____ dated _____ No _____ dated _____

CONDITIONS OF THE INVITATION TO BID: It shall be understood that by submission of this bid the Bidder agrees to all of the conditions of the Invitation to Bid dated **July31, 2012** and any Addenda issued thereto and referenced above

BIDDER MUST SIGN HERE BELOW:

By signing here the firm does hereby attest that it has fully read the instructions conditions and general and special provisions and understands them

Firm Name _____

Authorized Signature: _____

Name & Title Printed _____

Telephone No _____ FAX No _____

E-Mail Address _____

Date _____

EXCEPTIONS (If no exceptions are taken state NONE)

_____

Bidder shall use this form to provide the information for notice

1 Contact information for notice

Name _____

Address _____

_____

Telephone Number _____ Facsimile number _____

SPECIAL PROVISIONS
VEHICLE REPAIRS
GALVESTON COUNTY, TEXAS

2 If a copy of notice is requested, please complete below

Name _____

Address _____

_____

Telephone Number _____ Facsimile number _____

3 If second or more copies are requested for notice, please supplement this form and clearly mark the supplement as "Supplementary Notice Information"

Bidder to submit reference information. Bidder shall use this form to provide minimum required reference information. If Bidder wishes to provide more than the minimum, Bidder should supplement this form and should clearly mark the supplement as "Supplementary Reference Information"

1 References who can attest to the Bidder's capability to carry out the requirements set forth in this bid

Name of Organization _____
Name of Person _____
Title of individual within Organization, if applicable _____
Business address _____
_____
Telephone Number _____ Facsimile number _____

Name of Organization _____
Name of Person _____
Title of individual within Organization, if applicable _____
Business address _____
_____
Telephone Number _____ Facsimile number _____

Name of Organization _____
Name of Person _____
Title of individual within Organization, if applicable _____
Business address _____
_____
Telephone Number _____ Facsimile number _____

SPECIAL PROVISIONS
VEHICLE REPAIRS
GALVESTON COUNTY, TEXAS

2 References of major supplier of Bidder who can speak to the financial capability of the Bidder to carry out the requirements set forth in this bid

Business Name of Supplier _____
Name of Person _____
Title of individual within Organization, if applicable _____
Business address _____
_____
Telephone Number _____ Facsimile number _____

Business Name of Supplier _____
Name of Person _____
Title of individual within Organization, if applicable _____
Business address _____
_____
Telephone Number _____ Facsimile number _____

Business Name of Supplier _____
Name of Person _____
Title of individual within Organization, if applicable _____
Business address _____
_____
Telephone Number _____ Facsimile number _____

The rest of this page intentionally left blank*

State of Texas

County of Galveston

Contract

This Contract is entered into between the County of Galveston, a political subdivision of the State of Texas and the Contractor named below pursuant to Texas Local Government Code, Chapter 262, Subchapter C and the referenced invitation to bid

Contract Number: **CM12194**

Invitation to Bid Number: **Bid #B122028 – Vehicle Repairs**

Term of Contract **One (1) year with two (2) one (1) year extensions**

Initial term (Services) Beginning date of execution of this Contract by latest signatory to sign and terminating **September 7, 2013 .**

Term of Completion (Construction or other time specific contract): The Contractor shall complete the work within N/A Calendar Days of the issuance of the notice to proceed The time set forth for completion of the work is an essential element of the job

Renewal Options: (if applicable):

Year One	Yes (X) No ( )
Year Two	Yes (X) No ( )
Year Three	Yes ( ) No (X)
Year Four	Yes ( ) No (X)

Contractor: **Liggio's Tire and Service Center**

Awarded as to addendum(s) (if applicable):

Addendum No 1 ( ) yes ( ) no ( ) n a
Addendum No 2 ( ) yes ( ) no ( ) n a
Addendum No 3 ( ) yes ( ) no ( ) n a

Payment Bond Required ( ) yes (X)no

Performance Bond Required ( ) yes (X) no

Notice to be Given to:

Galveston County:

County Purchasing Agent
Galveston County
722 Moody
Fifth (5th) Floor
Galveston, Texas 77550

Contractor

LIGGIO'S TIRE SERVICE CENTER, INC.
2604 44TH STREET
DICKINSON, TX 77539

County and Contractor agree as follows:

1 **Parts of Contract**: Sections I (Invitation to Bid; Instructions to Bidders), II (Bid Proposal; Contract Award), III (Special Terms and Conditions, including Specifications, Drawings and Addenda, if any), and IV (General Terms and Conditions) attached to this Contract Award are all made a part of this Contract and collectively evidence and constitute the entire contract.

2. **Contractor Responsibilities**: Contractor will obtain all required permits or licenses, if any; furnish all of the required materials, equipment, and supplies; perform all of the work specified in the bid package; and do everything called for therein. All work shall be performed in a good and workmanlike manner and at minimal interruption of daily County activities.

3 **Payment for Services**: The County, upon satisfactory work by Contractor and receipt of approved invoice, will pay Contractor according to prices and payment schedule listed in the bid sheets contained in Contractor's Bid Proposal.

4 **Independent Contractor**: None of the provisions of this contract for services are intended to create, nor shall be deemed to create, any relationship between Galveston County and Contractor other than that of independent entities contracting with each other solely for the purpose of effecting the provisions of this Contract. In the performance of work, duties and obligations under this agreement, Contractor is at all times acting and performing as an independent contractor with complete control over the means, manner, and method by which services are rendered Contractor is not an agent or employee of the County for any purpose. Contractor and his employees are not eligible for nor will be permitted to participate in any employee benefit plans which are normally provided to employees of the County, including vacation and sick leave, retirement plans, disability and worker's compensation. County assumes no liability to any third party for any actions, inactions or deeds taken in the performance of services by Contractor, its agents, employees or representatives.

5. **Employment Taxes**: Contractor shall be solely responsible for all IRS tax reporting and quarterly payments of estimated tax, FICA payments, and any other tax withholding required by the State or Federal governments.

6 **Initial Term and Options to Renew**: The initial term of the Contract will be as stated above. Contractor hereby grants to County the unilateral right to exercise an option to renew this Contract for such periods of time as specified above. Such option to renew shall be exercised only if all terms and conditions, except for the contract period being extended and pricing indicated on bid sheets, remain unchanged and in full force and effect. Each option is to be executed in the form of a letter from the County Purchasing Agent advising the Contractor of the election of the option. Each option is to be issued not sooner than Ninety (90) Days prior to expiration of this contract or each renewal period, nor later than the final day of the contract period or each renewal period Each option to renew may not cover more than one (1) year The total period of this contract, including all extensions as a result of exercising this option, may not exceed the maximum combined period specified above

7 **Cancellation**· County may cancel the Contract, with or without cause, or solely for its convenience upon thirty (30) days prior written notice to the Contractor

8 **Covenant Against Contingent Fees**. Contractor warrants that no persons or selling agency has been employed or retained to solicit or secure this contract upon an agreement or understanding for a commission, percentage, brokerage, or continent fee, excepting bona fide employees or bona fide established commercial selling agencies maintained by the Contractor for the purpose of securing business For breach or violation of this warranty, County shall have the right to immediately terminate this Contract without liability to Contractor, or in its discretion to deduct from the contract price for consideration, or otherwise recover the full amount of such commission, percentage, brokerage, or contingent fee.

9 **Subcontracting or Assignment**: Contractor may not assign, sell, or otherwise transfer this Contract in whole or in part without prior written permission of the County. Such consent, if granted, shall not relieve the Contractor of any of its responsibilities under the contract. Failure to request consent shall be grounds for termination.

10. **Novation and Change of Name Agreements**. Contractor is responsible for the performance of this Contract. In the event a change of name or novation agreement (change of ownership) is required pursuant to action initiated by the Contractor, the County Purchasing Agent shall be notified immediately. No change in the obligation of the Contractor will be recognized until such change is approved by Commissioners' Court.

11. **Force Majeure** In the event that the performance by the County of any of its obligations or undertakings hereunder shall be interrupted or delayed by any occurrence not occasioned by its own conduct, whether such occurrence by an act of God or the common enemy or the result of war, riot, civil commotion, sovereign conduct, or the act or conduct of any person or persons not a party or privy hereto, then it shall be excused from such performance for such period of time as is reasonably necessary after such occurrence to remedy the effects thereof

12. **Entirety of Agreement and Modification.** This Contract contains the entire agreement of the parties. Any prior agreement, promise, negotiation, or representation not expressly set forth in this Contract has no force or effect This Contract may be amended or changed only by the written consent of each party hereto duly executed by the authorized representative of each party.

13. **Severability.** If a provision contained in this contract is held invalid for any reason, the invalidity shall not affect other provisions of the contract that can be given effect without the invalid provision, and to this end the provisions of this Contract are severable.

14. **Validity/Enforceability.** If any current or future legal limitations affect the validity or enforceability of a provision of this Contract, then the legal limitations are made a part of this Contract and shall operate to amend this contract to the minimum extent necessary to bring this contract into conformity with the requirements of the limitation, and as so modified, this Contract shall continue in full force and effect.

15. **Governing Law**· This Contract shall be governed by the laws of the State of Texas and all obligations of the parties are performable in Galveston, Texas Venue shall lie exclusively in Galveston, Texas.

16. **Benefit**: This contract is intended to inure only to the benefit of County and Contractor. This contract is not intended to create, nor shall be deemed or construed to create, any rights in third parties.

17. **Authority to Bind** The person or persons executing and signing this Contract on behalf of each party guarantee that the person or persons are fully authorized to execute the contract and to legally bind the party to all terms and provisions of this contract, and that this contract constitutes the legal, valid, and binding agreement of each party hereto.

18. **Immunity Retained**: The County does not waive or relinquish any immunity or defense on behalf of itself, its trustees, officer, employees, and agents as a result of its execution of this contract and performance of the covenants contained herein. The County specifically reserves any claim it may have to sovereign, qualified, or official immunity as a defense to any action arising in conjunction with this contract.

19 **Meaning of Words**: Except as provided otherwise, words shall be given their ordinary meaning. If a word is connected with and used with reference to a particular trade or subject matter or is used as a word of art, the word shall have the meaning given by experts in the particular trade, subject matter, or art. Words in the present or past tense include the future tense. The singular includes the plural and the plural includes the singular unless expressly provided otherwise.

20 **Public Information Act**: the parties agree that the County is a governmental body for purposes of the Public Information Act, codified as Chapter 552 of the Texas Government Code and as such is required to release information in accordance with the Public Information Act.

21 **Headings**: The headings at the beginning of the various provisions of this agreement have been included only in order to make it easier to locate the subject covered by each provision and are not to be used in construing this agreement.

22. **Conflict of Provisions:** In the event of an irreconcilable conflict between provision of this Contract and any part of the Contract listed in Paragraph One above, the terms of this Contract shall prevail.

Executed on this the effective 8 day of September, 2012.

Contractor:

Liggio's Tire & Service Center, Inc

By: **Date:** 07-20-2012

Galveston County

By: **Date:** 8/21/12

Mark A. Henry, County Judge

Attest:

Dwight Sullivan, County Clerk

By: Brandy Chapman **Deputy**
Brandy Chapman

State of Texas

County of Galveston

Contract

This Contract is entered into between the County of Galveston, a political subdivision of the State of Texas and the Contractor named below pursuant to Texas Local Government Code, Chapter 262, Subchapter C and the referenced invitation to bid

Contract Number: **CM12194**

Invitation to Bid Number. **Bid #B122028 – Vehicle Repairs**

Term of Contract **One (1) year with two (2) one (1) year extensions**

Initial term (Services) Beginning date of execution of this Contract by latest signatory to sign and terminating **September 7, 2013 .**

Term of Completion (Construction or other time specific contract): The Contractor shall complete the work within N/A Calendar Days of the issuance of the notice to proceed The time set forth for completion of the work is an essential element of the job

Renewal Options: (if applicable):

Year One	Yes (X) No ( )
Year Two	Yes (X) No ( )
Year Three	Yes ( ) No (X)
Year Four	Yes ( ) No (X)

Contractor: **Classic Ford**

Awarded as to addendum(s) (if applicable):

Addendum No 1 ( ) yes ( ) no ( ) n a
Addendum No 2 ( ) yes ( ) no ( ) n a
Addendum No 3 ( ) yes ( ) no ( ) n a

Payment Bond Required ( ) yes (X)no

Performance Bond Required ( ) yes (X) no

Notice to be Given to:

Galveston County:

County Purchasing Agent
Galveston County
722 Moody
Fifth (5th) Floor
Galveston, Texas 77550

Contractor:

Classic Ford
7100 Broadway
Galveston, Tx 77554

County and Contractor agree as follows:

1 **Parts of Contract**: Sections I (Invitation to Bid, Instructions to Bidders), II (Bid Proposal, Contract Award), III (Special Terms and Conditions, including Specifications, Drawings and Addenda, if any), and IV (General Terms and Conditions) attached to this Contract Award are all made a part of this Contract and collectively evidence and constitute the entire contract.

2. **Contractor Responsibilities**. Contractor will obtain all required permits or licenses, if any; furnish all of the required materials, equipment, and supplies, perform all of the work specified in the bid package; and do everything called for therein. All work shall be performed in a good and workmanlike manner and at minimal interruption of daily County activities

3. **Payment for Services**: The County, upon satisfactory work by Contractor and receipt of approved invoice, will pay Contractor according to prices and payment schedule listed in the bid sheets contained in Contractor's Bid Proposal.

4. **Independent Contractor**: None of the provisions of this contract for services are intended to create, nor shall be deemed to create, any relationship between Galveston County and Contractor other than that of independent entities contracting with each other solely for the purpose of effecting the provisions of this Contract. In the performance of work, duties and obligations under this agreement, Contractor is at all times acting and performing as an independent contractor with complete control over the means, manner, and method by which services are rendered. Contractor is not an agent or employee of the County for any purpose. Contractor and his employees are not eligible for nor will be permitted to participate in any employee benefit plans which are normally provided to employees of the County, including vacation and sick leave, retirement plans, disability and worker's compensation. County assumes no liability to any third party for any actions, inactions or deeds taken in the performance of services by Contractor, its agents, employees or representatives.

5 **Employment Taxes**: Contractor shall be solely responsible for all IRS tax reporting and quarterly payments of estimated tax, FICA payments, and any other tax withholding required by the State or Federal governments.

6. **Initial Term and Options to Renew**: The initial term of the Contract will be as stated above. Contractor hereby grants to County the unilateral right to exercise an option to renew this Contract for such periods of time as specified above. Such option to renew shall be exercised only if all terms and conditions, except for the contract period being extended and pricing indicated on bid sheets, remain unchanged and in full force and effect. Each option is to be executed in the form of a letter from the County Purchasing Agent advising the Contractor of the election of the option. Each option is to be issued not sooner than Ninety (90) Days prior to expiration of this contract or each renewal period, nor later than the final day of the contract period or each renewal period. Each option to renew may not cover more than one (1) year. The total period of this contract, including all extensions as a result of exercising this option, may not exceed the maximum combined period specified above.

7. **Cancellation**: County may cancel the Contract, with or without cause, or solely for its convenience upon thirty (30) days prior written notice to the Contractor

8. **Covenant Against Contingent Fees**. Contractor warrants that no persons or selling agency has been employed or retained to solicit or secure this contract upon an agreement or understanding for a commission, percentage, brokerage, or continent fee, excepting bona fide employees or bona fide established commercial selling agencies maintained by the Contractor for the purpose of securing business. For breach or violation of this warranty, County shall have the right to immediately terminate this Contract without liability to Contractor, or in its discretion to deduct from the contract price for consideration, or otherwise recover the full amount of such commission, percentage, brokerage, or contingent fee.

9. **Subcontracting or Assignment**: Contractor may not assign, sell, or otherwise transfer this Contract in whole or in part without prior written permission of the County. Such consent, if granted, shall not relieve the Contractor of any of its responsibilities under the contract. Failure to request consent shall be grounds for termination.

10. **Novation and Change of Name Agreements**· Contractor is responsible for the performance of this Contract. In the event a change of name or novation agreement (change of ownership) is required pursuant to action initiated by the Contractor, the County Purchasing Agent shall be notified immediately No change in the obligation of the Contractor will be recognized until such change is approved by Commissioners' Court.

11 **Force Majeure**· In the event that the performance by the County of any of its obligations or undertakings hereunder shall be interrupted or delayed by any occurrence not occasioned by its own conduct, whether such occurrence by an act of God or the common enemy or the result of war, riot, civil commotion, sovereign conduct, or the act or conduct of any person or persons not a party or privy hereto, then it shall be excused from such performance for such period of time as is reasonably necessary after such occurrence to remedy the effects thereof.

12 **Entirety of Agreement and Modification**: This Contract contains the entire agreement of the parties. Any prior agreement, promise, negotiation, or representation not expressly set forth in this Contract has no force or effect. This Contract may be amended or changed only by the written consent of each party hereto duly executed by the authorized representative of each party.

13 **Severability**. If a provision contained in this contract is held invalid for any reason, the invalidity shall not affect other provisions of the contract that can be given effect without the invalid provision, and to this end the provisions of this Contract are severable.

14. **Validity/Enforceability** If any current or future legal limitations affect the validity or enforceability of a provision of this Contract, then the legal limitations are made a part of this Contract and shall operate to amend this contract to the minimum extent necessary to bring this contract into conformity with the requirements of the limitation, and as so modified, this Contract shall continue in full force and effect.

15. **Governing Law**: This Contract shall be governed by the laws of the State of Texas and all obligations of the parties are performable in Galveston, Texas Venue shall lie exclusively in Galveston, Texas.

16 **Benefit**: This contract is intended to inure only to the benefit of County and Contractor. This contract is not intended to create, nor shall be deemed or construed to create, any rights in third parties.

17 **Authority to Bind**: The person or persons executing and signing this Contract on behalf of each party guarantee that the person or persons are fully authorized to execute the contract and to legally bind the party to all terms and provisions of this contract, and that this contract constitutes the legal, valid, and binding agreement of each party hereto

18. **Immunity Retained**: The County does not waive or relinquish any immunity or defense on behalf of itself, its trustees, officer, employees, and agents as a result of its execution of this contract and performance of the covenants contained herein The County specifically reserves any claim it may have to sovereign, qualified, or official immunity as a defense to any action arising in conjunction with this contract.

19. **Meaning of Words**: Except as provided otherwise, words shall be given their ordinary meaning If a word is connected with and used with reference to a particular trade or subject matter or is used as a word of art, the word shall have the meaning given by experts in the particular trade, subject matter, or art. Words in the present or past tense include the future tense. The singular includes the plural and the plural includes the singular unless expressly provided otherwise.

20. **Public Information Act**: the parties agree that the County is a governmental body for purposes of the Public Information Act, codified as Chapter 552 of the Texas Government Code and as such is required to release information in accordance with the Public Information Act.

21 **Headings**: The headings at the beginning of the various provisions of this agreement have been included only in order to make it easier to locate the subject covered by each provision and are not to be used in construing this agreement

22 **Conflict of Provisions:** In the event of an irreconcilable conflict between provision of this Contract and any part of the Contract listed in Paragraph One above, the terms of this Contract shall prevail.

Executed on this the effective 8 day of September, 2012.

Contractor:

Classic Ford

By:

Date: 7/31/12

Galveston County

By:

Date: 8/21/12

Mark A. Henry, County Judge

Attest:

Dwight Sullivan, County Clerk

By: Brandy Chapman **Deputy**
Brandy Chapman

AGENDA ITEM #30b1

GALVESTON COUNTY, TEXAS
COMMISSIONERS COURT
Contract Approval Request

Date of Request	8/21/12	Department	PURCHASING		
Renewal Contract	NO	Orgkey		Object Code	
Contract Start Date	9/15/2010	Vendor	ABL MANAGEMENT INC		
Contract End Date	9/30/2013	Vendor No	702471	Contract No	BID # B102014
Description	FOOD SERVICES FOR GALVESTON COUNTY JAIL				
Contract # Issued By Purchasing		CM10165	Requested Legal Review	Yes _____ No X	

Fund Name	Fund #	FY12 $ Budget	FY12 $ Request	FY13 $ Request	FY14 $ Request	FY15 $ Request	FY16 $ Request
Totals		-	-	-	-	-	-
Total Cost							

Approved By	Date	Signature
Department Head		
Purchasing Agent	8-21-2012	
County Legal		

Contract listed in Budget Documentation (Yes/No)

County Budget Office

Form Number

THE COUNTY OF GALVESTON

RUFUS CROWDER, CPPO CPPB
PURCHASING AGENT

COUNTY COURTHOUSE
722 Moody (21st Street)
Fifth (5th) Floor
GALVESTON, TEXAS 77550
(409) 770-5371

GWEN MCLAREN, CPPB
ASST PURCHASING AGENT

August 14, 2012

Honorable County Judge
And Commissioners' Court
County Courthouse
Galveston, Texas

Re: RFP #B102014, Food Service for Galveston County Jail

Gentlemen,

ABL Management, Inc , has requested that the current contract with Galveston County be amended to reflect a price increase of 3% per meal as specified in RFP #B102014, Food Service for Galveston County Jail (see attachment page 29 – 31, Funding, Pricing, Billing and Payment section of the RFP) The requested increases are claimed to be the direct result of the rising costs associated with fuel and wholesale food products

The current contract was awarded by the Commissioners' Court on October 1, 2010 and is in the second year of a three year term The increase has been tentatively approved by Commissioners' Court for the Sheriff's Office

This will be the second request for amendment regarding this contract A copy of the request letter is attached for your review

Your consideration in this matter will be greatly appreciated

Respectfully submitted,

Rufus G Crowder, CPPO, CPPB
Purchasing Agent
County of Galveston

Attachments

FREDDIE POOR
Sheriff
Galveston County

Mr Rufus G Crowder, CPPB

Purchasing Agent

Galveston County Purchasing Department

722 21st ST

Galveston, Texas 77550

Mr Crowder,

ABL has requested a 3% increase in their Food Contract for 2012 / 2013 Their current contract with the jail allows up to a 6% increase yearly In 2010 / 2011, ABL asked for a 4% increase in their food contract with the jail This request was denied by Commissioner's Court because of budget restraints stemming from Hurricane Ike

The 3% increase has been tentatively approved by Commissioner's Court during the budget hearing for the Sheriff's Office

I recommend a 3% increase for ABL

Respectfully Submitted,

Freddie Poor

Sheriff, Galveston County

ABL Management Inc

May 16, 2012

Mr Rufus G Crowder, CPPB
Purchasing Agent
Galveston County Purchasing Department
722 Moody Avenue 21st Street
Galveston, Texas 77550

Sent Via Email. rufus crowder@co galveston tx us

Dear Mr Crowder

Per my conversation with Chief Henson on Friday April 27, 2012, I am writing to confirm ABL Management, Inc 's desire to extend the Food Service Agreement at the Galveston County Sheriff Department for an additional year

Unfortunately, the increase in wholesale food costs and fuel cost necessitates ABL Management, Inc to request a rate increase as provided for in our Agreement We are requesting an increase of three (3%) percent and the new rates reflect such an increase

INMATE POPULATION	PRICE PER MEAL
951 – 1000	$ 8892
1001 – 1050	$ 8751
1051 – 1100	$ 8703
1101 – 1150	$ 8621
1151 – 1200	$ 8545
1201 – Plus	$ 8474

The rates for this sliding scale go into effect October 1, 2012

Please sign and date in the space on Page 2 and return a signed original in the enclosed envelope for our files

♦ P O. Box 40486 ♦ Baton Rouge, LA 70835-0486 ♦
♦ Phone (225) 272-6063 ♦ Fax. (225) 273-2165 ♦
♦ www ablmanagement com ♦
♦ RoshonCody@ablmanagement com ♦

We thank you for your continued confidence in ABL Management, Inc and look forward to exceeding your expectations of a successful food service operation at Galveston County Sheriff's office If you have any questions, please do not hesitate to call me at 800-375-1293

Sincerely,

Mr. Roshon S Cody
Vice President

RSC sda

Enclosures

c Sheriff Freddie Poor, Galveston County Sheriff
Chief Mike Henson, Chief Deputy
Mr John D Appleton, Chairman, President and CEO
Ms Sandee Scott, Vice President
Mr Bill Eastburn, Director of Operations
Unit 190 / Agreement File / Receivables

APPROVED BY

Mr Rufus G Crowder, CPPB Date
Galveston County Purchasing Agent

SPECIAL PROVISIONS
FOOD SERVICES FOR GALVESTON COUNTY JAIL
GALVESTON COUNTY, TEXAS

A detailed plan should be submitted with the proposal that addresses at a minimum how the following issues will be handled and transferred

1) Recruitment of current and new staff including the Food Service Manager.
2) Equipment and inventory
3) Orientation of new staff
4) Time tables for completion of transition
5) A list of personnel assigned to supervise and monitor the transition

B Future Transitions

The service provider recognizes that the services under this contract are vital to Galveston County and must be continued without interruption and that, upon contract expiration, or early termination, another contractor may continue them The service provider agrees to one (1) furnish phase-in training, and two (2) exercise its best efforts and cooperation to effect an orderly and efficient transition to a successor

The service provider shall, upon written notice, negotiate in good faith a plan with a successor to determine the nature and extent of phase-in, phase-out services required The plan shall specify a date for work described in the plan, and shall be subject to the Galveston County Sheriff's approval The service provider shall provide sufficient experienced personnel during the phase-in, phase-out period to ensure that the services called for by this contract are maintained at the required level of proficiency

The service provider shall allow as many personnel as practical to remain on the job to help the successor maintain the continuity and consistency of the services required by this contract The service provider shall also disclose necessary personnel records and allow the successor to conduct on site interviews with these employees If selected employees are agreeable to the change, the service provider shall release them at a mutually agreeable date and negotiate transfer of their earned fringe benefits to the successor.

VIII. FUNDING, PRICING, BILLING AND PAYMENT

A Funding

County funds for payment on any contracts awarded have been provided through the Galveston County budget approved by County Commissioners for this fiscal year only State law prohibits the obligation and expenditure of public funds beyond the fiscal year for which a budget has been approved. However, the cost of items or services covered by this contract is considered a recurring requirement and is included as a standard and routine expense of Galveston County to be included in each proposed budget within the foreseeable future Galveston County Commissioners expect this to be an integral part of future budgets to be approved during the period of this contract, except for unanticipated needs or events which may prevent such payments against this contract However, Galveston County cannot guarantee the availability of funds, and enters into this contract only to the extent such funds are made available The Fiscal year for Galveston County extends from October 1 through

SPECIAL PROVISIONS
FOOD SERVICES FOR GALVESTON COUNTY JAIL
GALVESTON COUNTY, TEXAS

September 30 The Galveston County Commissioners' Court unconditionally reserves, to itself upon thirty (30) days prior notice to service provider, the right to terminate this contract at the end of each-budget period notwithstanding the actual anticipated term of the contract.

B Pricing

1 Pricing will be on a unit basis as shown on the proposal sheet The net price will be delivered to Galveston County, including all freight or shipping charges All prices must be written in ink or typewritten If service provider contemplates any additional costs of any kind, other than those submitted, service provider MUST clearly indicate on the proposal sheet(s) any such costs contemplated or forfeit the right to payment for same All prices submitted in a properly signed proposal will constitute firm offers held open through time of award by the Commissioners' Court

2 The prices stated on the price sheet of this contract are firm for the first twelve months of service Unit prices for the subsequent base year including annual renewal options shall be re-determined each twelve months at the beginning of each period Unit prices per meal may increase or decrease, and shall remain firm for the entire redetermination period

3 Prices shall be re-determined each July, to be effective the 1st day of October based upon the Consumer Price Index, All Urban Consumers (CPI-U), U S City Average, Food Away From Home Index, published by U S Department of Labor

4 Any increase in the established unit price shall not exceed 5% from year to year

5 Each redetermination of prices shall be established through issuance of a modification to this contract, signed by the Contractor and County stating the re-determined prices that will apply during the redetermination period

C Reports / Billing and Payment

The service provider shall prepare and forward weekly certified statements to the Chief Deputy and Chief Jailer at the Galveston County Sheriff's Department The statement will reflect the preceding weeks food services detailing the exact number of meals served on a daily basis as follows.

1 Actual number of Adult Inmate meals
2 Actual number of Staff member meals
3. Actual number of approved visitor meals
4 Any additional food or beverage services required

In addition, the service provider shall submit a comprehensive monthly invoice to the Chief Deputy and the Chief Jailer at the Galveston County Sheriff's office for the jail inmates After verification and approval, invoice will be forwarded to

SPECIAL PROVISIONS
FOOD SERVICES FOR GALVESTON COUNTY JAIL
GALVESTON COUNTY, TEXAS

Galveston County Auditor's Office
P.0. Box 1418
Galveston, TX 77553

All payments must have prior approval by the County Auditor and the Commissioners' Court before payments can be made Payment will be made within thirty (30) workdays after receipt of a proper invoice by the authority listed above

Neither signed receipt nor payments shall be construed as an acceptance of any effective work, improper material(s), or release for any claim for damage

All County purchases are subject to the County Purchasing Act (Texas Local Government Code #262 021 et seq) unless specifically exempted therein Other statutes may effect service provider's rights and obligations Service Providers are urged to consult with their attorney before entering into this or any contract

Any successful service provider shall not deliver products or services in excess of those authorized and under no circumstances will Galveston County be liable for products or services or costs which exceed the amounts specified in this RFP and the required purchase order(s)

IX. CONTRACT TERM

A General Provisions

This is an estimated requirements contract and therefore the successful contractor will be paid only to the extent of actual meals served and as called for by the Chief Deputy of Galveston County or his authorized representative. This contract shall be for a three-year (3) period unless terminated or extended as provided herein

B Option to Renew

Both parties hereto agree to renew this contract on an annual basis for a maximum period of two (2) additional one (1) year periods Such option to renew shall be exercised in writing solely at the discretion of Galveston County, subject to any price redetermination provisions, if any, outlined elsewhere in this contract, and further, only if all terms and conditions except those affecting price as re-determined by price redetermination provisions remain unchanged Each option shall be exercised through the issuance of a supplemental agreement extending the contract period, to be issued not sooner than ninety (90) days prior to expiration of this contract, nor later than the final day of the contract period Each option to renew may cover not more than one (1) year period

C Maximum Combined Period

The combined maximum contract period shall not exceed five (5) years

D Termination for Default

Galveston County may cancel any contract awarded upon thirty (30) days prior written notice Notice shall be sent by certified mail, return receipt requested

AGENDA ITEM #30c1

THE COUNTY OF GALVESTON

RUFUS CROWDER, CPPB
PURCHASING AGENT

GWEN MCLAREN, CPPB
ASST PURCHASING AGENT

COUNTY COURTHOUSE
722 Moody (21st Street)
Fifth (5th) Floor
Galveston, Texas 77550
(409) 770-5371

August 13, 2012

Honorable County Judge
And Commissioners' Court
County Courthouse
Galveston, Texas

Re: Bid #B102016, Cement Stabilized Crushed Concrete Base

Gentlemen,

Bid #B102016, Cement Stabilized Crushed Concrete Base is scheduled for its second extension on September 23, 2012 The current vendor, Cherry Crushed Concrete has requested a price increase ranging from 13% to 30 6%

It is recommended that this bid be cancelled and authorize the Purchasing Agent to re-bid this commodity

Your consideration in this matter will be greatly appreciated

Respectfully submitted,

Rufus G Crowder, CPPO, CPPB
Purchasing Agent
County of Galveston

Attachment

The County of Galveston

ROAD & BRIDGE DEPARTMENT
5115 Highway 3
Dickinson, Texas 77539

Layne Harding
Road Administrator

Office 281/534-4152
Facsimile 281/614-5073

Date July 30, 2012

To Rufus Crowder, Purchasing Agent

From Layne Harding, Road Administrator

Re: **Bid#B102016 – Cement Stabilized Crushed Concrete Base**

I am recommending that we do not accept the requested price increase from Cherry Crushed Concrete The requested price increase varies from 13% to 30 6% higher than the current awarded price

I am requesting that after the bid expires on 09/22/12, we solicit bids again for this product

LH/djs

John Conyer
General Manager
Stabilized Material Div
Mobile 832-435-2533
Fax 281-692-1804

CHERRY CRUSHED CONCRETE

"Quality & Service at a Reasonable Cost"

Stabilized Material Division
5325 CR 58
Manvel, TX 77578
Phone 281-692-1900
Fax. 281-692-9471

July 18, 2012

The County of Galveston
722 Moody, 5th Floor
Galveston, Texas 77550
Attn: Ruf Crowder

RE: Contract for BID # B102016

Enclosed you will find a spreadsheet with the New/Old prices and percentage increase on 5%, 7%, & 9% cement stabilized crushed concrete base Attached are letters from our suppliers on the reasoning for the increase of our material. Please note we will like to continue our contract with The County of Galveston

Should you have any questions on the information submitted, please do not hesitate to contact Jesse Gonzales at 281-692-1900 ext 4

Sincerely,

Jesse Gonzales
Sales Representative
Cherry Crushed Concrete

BID#: B102016

LINE ITEM DETAIL
CEMENT STABILIZED CRUSHED CONCRETE BASE
GALVESTON COUNTY, TEXAS

ITEM NO.	PRODUCT CODE	DESCRIPTION	QTY	UNITS	OLD PRICE	NEW PRICE	% INCREASE
0001	91430	5 %-CEMENT DELIVERED TO SAN LEON	1	TN	$ 22.58	$ 26.58	17.715
0002	91430	5 %-CEMENT DELIVERED TO SANTA FE	1	TN	$ 21.58	$ 24.58	13.902
0003	91430	5 %-CEMENT DELIVERED TO DICKINSON	1	TN	$ 21.83	$ 24.83	13.743
0004	91430	5 %-CEMENT DELIVERED TO BACLIFF	1	TN	$ 22.58	$ 26.58	17.715
0005	91430	5 %-CEMENT DELIVERED TO GALVESTON	1	TN	$ 23.58	$ 27.58	16.964
0006	91430	5 %-CEMENT DELIVERED TO PORT BOLIVAR	1	TN	$ 25.08	$ 30.08	19.936
0007	91430	5 %-CEMENT DELIVERED TO HIGH ISLAND	1	TN	$ 26.08	$ 34.08	30.675
0008	91430	7 %-CEMENT DELIVERED TO SAN LEON	1	TN	$ 23.92	$ 27.92	16.722
0009	91430	7 %-CEMENT DELIVERED TO SANTA FE	1	TN	$ 22.92	$ 25.92	13.089
0010	91430	7 %-CEMENT DELIVERED TO DICKINSON	1	TN	$ 23.17	$ 26.17	12.948
0011	91430	7 %-CEMENT DELIVERED TO BACLIFF	1	TN	$ 23.92	$ 27.92	16.722
0012	91430	7 %-CEMENT DELIVERED TO GALVESTON	1	TN	$ 23.92	$ 27.92	16.722
0013	91430	7 %-CEMENT DELIVERED TO PORT BOLIVAR	1	TN	$ 25.42	$ 30.42	19.67
0014	91430	7 %-CEMENT DELIVERED TO HIGH ISLAND	1	TN	$ 26.42	$ 34.42	30.28
0015	91430	9 %-CEMENT DELIVERED TO SAN LEON	1	TN	$ 25.16	$ 29.16	15.898
0016	91430	9 %-CEMENT DELIVERED TO SANTA FE	1	TN	$ 23.66	$ 26.66	12.68
0017	91430	9 %-CEMENT DELIVERED TO DICKINSON	1	TN	$ 24.16	$ 27.16	12.417
0018	91430	9 %-CEMENT DELIVERED TO BACLIFF	1	TN	$ 25.16	$ 29.16	15.898
0019	91430	9 %-CEMENT DELIVERED TO GALVESTON	1	TN	$ 25.16	$ 29.16	15.898
0020	91430	9 %-CEMENT DELIVERED TO PORT BOLIVAR	1	TN	$ 26.66	$ 31.66	18.755
0021	91430	9 %-CEMENT DELIVERED TO HIGH ISLAND	1	TN	$ 27.66	$ 35.66	28.923

Texas-Oklahoma Sales Group

Holcim

Holcim (US) Inc
122 W Carpenter Frwy
Ste 535
Irving, TX 75039

Phone 800-326-1821
Fax 214-596-0767
www holcim com/us

Price Announcement

March 1, 2012

To Our Texas Customers

Effective April 1, 2012, Holcim (US) Inc will implement the following price increases for our Galena Park, TX terminal sales

Bulk Portland	$6 00 per short ton
GranCem®	$8 00 per short ton
Portland Package	$0 25 per bag
Masonry Package	$0 15 per bag
White Portland Package	$0 35 per bag
White Masonry Package	$0 25 per bag

Delivered price quotations will be furnished to your location(s) upon request

All sales are subject to Holcim's Standard Terms and Conditions of Sale

Prices will be adjusted to reflect any increase in freight rates, and/or taxes in effect at time of shipment and fuel surcharges will be billed for all freight pre-paid loads

We appreciate and value your business and look forward to providing our products and services to you in the future

Sincerely,

Stacey L Meyer
General Manager – TX/OK
Holcim (US) Inc

Holcim

Holcim (US) Inc
TX/OK Region & Sales
122 W Carpenter Frwy Ste 535
Irving, TX 75039

Office 214 596-9760
Fax 214-596-0767

Price Announcement

June 15, 2012

John Conyers
CHERRY CRUSHED CONCRETE INC
6131 SELINSKY RD
HOUSTON, Texas 77048

Dear John Conyers,

Holcim continuously monitors economic indicators important to the construction industry both nationally and in all regions of the United States Without doubt, our businesses and our industries have weathered the worst of the most dramatic downturn in construction materials in over a generation

During the last 12 months, the demand for construction material products has improved and we firmly believe evidence suggests that the U S economy is slowly beginning to recover These facts, combined with the relentless efforts we've all made to cut costs and build more efficient organizations has our businesses poised to improve in the coming weeks and months

To fully realize the potential we consider exists in the economy, and to begin the slow process of improved financial performance, we will increase our Cement and GranCem prices as follows[51]

Effective August 1, 2012

Bulk Portland/Masonry Cement	$5 00 per short ton
Enviroset	$5 00 per short ton
GranCem®	$5 00 per short ton
Portland Package	$0 20 per bag
Masonry Package	$0 15 per bag
White Portland Package	$0 20 per bag
White Masonry Package	$0 15 per bag

[51] As in the past, we are providing this notice well in advance of the implementation of these price increases and will not offer price protection Delivered price quotations will be furnished to your location(s) upon request All sales are subject to Holcim's Standard Terms and Conditions of Sale Prices will be adjusted to reflect any increase in freight rates, and/or taxes in effect at the time of shipment and fuel surcharges will be billed for all freight pre-paid loads

Also for your longer term planning

Effective January 1, 2013

Bulk Portland/Masonry Cement	$8 00 per short ton
Enviroset	$8 00 per short ton
GranCem®	$8 00 per short ton
Portland Package	$0 20 per bag
Masonry Package	$0 15 per bag
White Portland Package	$0 20 per bag
White Masonry Package	$0 15 per bag

Holcim continues to work tirelessly to support our customers while delivering the highest quality products We also understand that like us, you are constantly trying to improve financial performance and build a sustainable business for the future We sincerely value your commitment to Holcim, and we ask for your continued support as we move forward together toward better times

Please feel free to call me or our local representative should you have any questions

Sincerely,

Filiberto J Ruiz
Sr Vice President, Sales & Marketing

Stacey L Meyer
General Manager, TX-OK

CEMEX

May 1, 2012

Dear Valued Customer.

We thank you for your business and continued support After the deep and protracted recession of the last four years, we are encouraged by the rebound that the Texas economy has experienced, leading the U S in job creation and now fueling a recovery in construction spending

Even though we are encouraged by the positive signs of increased cement demand in Texas, we cannot achieve a level of profitability that will cover our cost of capital through volume growth alone With economic conditions now improving, we must take additional steps forward on the road to recovery by increasing our prices **$10 per ton effective August 1, 2012** The advanced notice we are providing will allow you to better prepare for the increase and in addition, we will hold prices firm, post-increase until January 1, 2013 As always, all sales are subject to our Standard Terms and Conditions

We value our relationship and look forward to continue providing you with highest quality products and excellent service, and to work with you proactively to build upon our relationship for our mutual success Please feel free to contact us anytime with any questions you may have,

Sincerely,

R Frank Craddock Jr
Executive Vice President, Commercial

Juan C Castillo
VP Cement Sales – TX & CO

Sales Office
2580 Wald Road, New Braunfels, TX 78132 USA, (800) 992-3639, (800) 99C-EMEX, Fax (210) 250-4153

U.S. Energy Information Administration

PETROLEUM & OTHER LIQUIDS

OVERVIEW | DATA | ANALYSIS & PROJECTIONS GLOSSARY › FAQS ›

View History O Weekly ◉ Monthly O Annual

Download Data (XLS File)

Gulf Coast No 2 Diesel Retail Prices

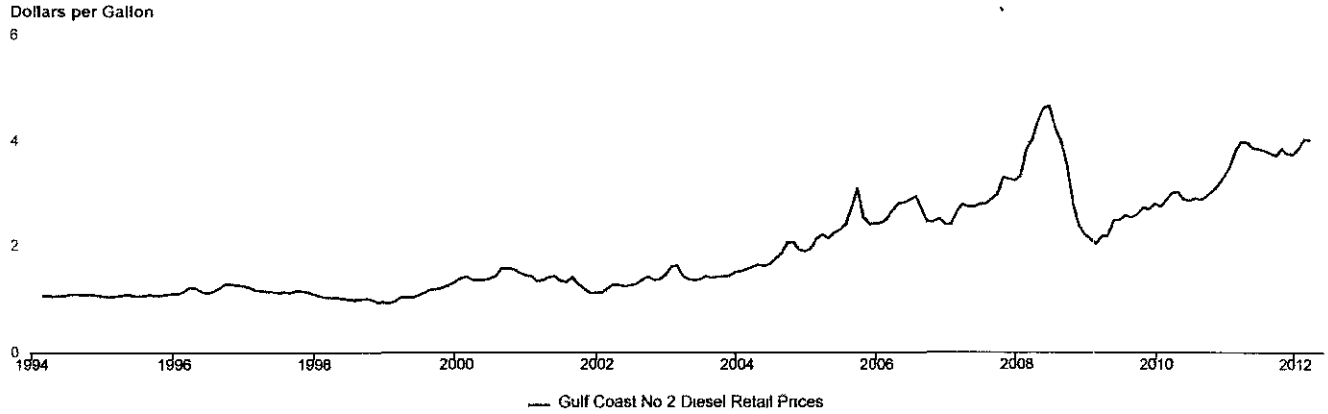

Source U S Energy Information Administration

Chart Tools

no analysis applied

Gulf Coast No 2 Diesel Retail Prices (Dollars per Gallon)

Year	Jan	Feb	Mar	Apr	May	Jun	Jul	Aug	Sep	Oct	Nov	Dec
1994			1 065	1 064	1 054	1 062	1 076	1 092	1 089	1 081	1 092	1 074
1995	1 059	1 050	1 046	1 066	1 086	1 080	1 060	1 063	1 084	1 072	1 073	1 085
1996	1 106	1 105	1 151	1 227	1 201	1 141	1 119	1 149	1 215	1 288	1 281	1 271
1997	1 255	1 230	1 176	1 159	1 156	1 145	1 126	1 139	1 130	1 157	1 162	1 141
1998	1 102	1 065	1 041	1 045	1 044	1 017	1 007	0 985	0 998	1 017	0 997	0 945
1999	0 940	0 934	0 964	1 043	1 036	1 028	1 082	1 132	1 181	1 190	1 218	1 257
2000	1 321	1 394	1 426	1 369	1 369	1 368	1 390	1 428	1 586	1 580	1 574	1 496
2001	1 457	1 441	1 339	1 358	1 420	1 433	1 345	1 331	1 414	1 284	1 199	1 123
2002	1 121	1 122	1 200	1 273	1 272	1 247	1 262	1 290	1 369	1 430	1 363	1 377
2003	1 459	1 621	1 637	1 443	1 375	1 367	1 383	1 435	1 407	1 428	1 431	1 442
2004	1 516	1 530	1 568	1 616	1 654	1 634	1 669	1 780	1 871	2 073	2 080	1 939
2005	1 906	1 958	2 148	2 226	2 150	2 256	2 314	2 421	2 766	3 107	2 553	2 424
2006	2 434	2 445	2 519	2 681	2 815	2 834	2 880	2 952	2 701	2 467	2 470	2 528
2007	2 412	2 417	2 629	2 801	2 745	2 756	2 799	2 803	2 894	2 984	3 313	3 279
2008	3 256	3 341	3 831	4 021	4 367	4 637	4 676	4 251	3 989	3 537	2 818	2 394
2009	2 225	2 138	2 057	2 192	2 201	2 498	2 494	2 588	2 549	2 608	2 738	2 699
2010	2 807	2 746	2 878	3 018	3 025	2 894	2 864	2 914	2 884	2 967	3 055	3 176
2011	3 339	3 531	3 838	3 991	3 979	3 876	3 862	3 823	3 771	3 725	3 860	3 764
2012	3 757	3 878	4 041	4 025								

Now

- = No Data Reported -- = Not Applicable NA = Not Available W = Withheld to avoid disclosure of individual company data

Release Date 5/21/2012
Next Release Date 5/29/2012

Referring Pages
- Gulf Coast (PADD 3) Gasoline and Diesel Retail Prices
- Retail Prices for Diesel (On-Highway) - All Types

AGENDA ITEM #31a

GALVESTON COUNTY, TEXAS
COMMISSIONERS COURT
Contract Approval Request

Date of Request.	8/7/12	**Department.**	Road & Bridge Department				
Renewal Contract	yes	**Orgkey**	2370296121		**Object Code**	5481000	
Contract Start Date	10/1/2012	**Vendor:**	Department of the Interior - US Geological Survey				
Contract End Date.	9/30/2012	**Vendor No**	O 42242		**Contract No·**	CM12092	
Description	Joint Funding Agreement for the program involving surface-water data collection for the period 10/1/12 - 9/30/13						
Contract # Issued By Purchasing		CM 12242		**Requested Legal Review:**		**Yes** ✓ **No** X	
Fund Name	**Fund #**	**FY12 $ Budget**	**FY12 $ Request**	**FY13 $ Request**	**FY14 $ Request**	**FY15 $ Request**	**FY15 $ Request**
Flood Control - Seawall Maintenance	2370	26,000	26,000	26,000			
Totals		26,000	26,000	26,000	-	-	-
Total Cost	$25,270						

Approved By	**Date**	**Signature**
Department Head	Layne Harding	Layne Harding
Purchasing Agent	8/8/2012	Evan A. McLin, CPPB
County Legal	8/8/12	Nancy Bozarth

Contract listed in Budget Documentation (Yes/No) Y

County Budget Office	[illegible]	8/8/2012

Form Number

The County of Galveston

ROAD & BRIDGE DEPARTMENT
5115 Highway 3
Dickinson, Texas 77539

Layne Harding
Road Administrator

Office 281/534-4152
Facsimile 409/765-3247

MEMORANDUM

TO: The Honorable Mark Henry, County Judge
Commissioner Patrick Doyle, Precinct One
Commissioner Kevin O'Brien, Precinct Two
Commissioner Stephen Holmes, Precinct Three
Commissioner Ken Clark, Precinct Four

FROM: Layne Harding
Road Administrator

DATE: August 7, 2012

RE: **Agenda Item: Joint Funding Agreement with United States Geological Survey Water Resources Division**

Please place the following item on the next Commissioners' Court agenda:

Consideration and execution of FY 2013 Joint Funding Agreement with the United States Geological Survey for surface-water data collection activities during the period October 1, 2012 through September 30, 2013.

The surface water program includes the following:
Moses Lake – Galveston Bay – Texas City
Texas City Pump Station – Texas City
LaMarque Levee Pump Station – La Marque

If you need any other information, please contact me at 281/534-4152

LH/djs

Attachments – 2 Original Agreements

United States Department of the Interior

U S GEOLOGICAL SURVEY
Texas Water Science Center
1505 Ferguson Lane
Austin TX 78754

August 1, 2012

Layne Harding
Road Administrator
Galveston County
5115 Highway 3
Dickinson, TX 77539

Dear Mr Harding

Enclosed are two signed originals of our standard joint-funding agreement for the project(s) Texas Data Collection Program, during the period October 1, 2012, through September 30, 2013, in the amount of $25,270 cash from your agency Please sign and return one fully-executed original to Karen Beers at the address above

Federal law requires that we have a signed agreement before we start or continue work Please return the signed agreement by **October 1, 2012.** If for any reason the agreement cannot be signed and returned by the date shown above, please contact Michael Turco by phone number 936-271-5312, or email mjturco@usgs gov, to make alternate arrangements

This is a fixed cost agreement to be billed **quarterly** via Down Payment Request (automated Form DI-1040) Please allow 30-days from the end of the billing period for issuance of the bill If you experience any problems with your invoice(s), please contact Kandis Becher at phone number 817-263-9545 x225, or email at kkbecher@usgs gov

The results of all work performed under this agreement will be available for publication by the U S Geological Survey We look forward to continuing this and future cooperative efforts in these mutually beneficial water resources studies

Sincerely,

Robert L Joseph
Director

Enc 13CSTX045000000 (2)

Attachment for TX045

USGS Station No	Description	CODE	No Units	Difficulty Factor	USGS Cooperative Water Program Funds	Galveston County Funds	TOTAL GROSS COST
001	**SURFACE WATER PROGRAM**						
08077650	Moses Lake-Galveston Bay nr Texas City TX						
	Stage Station (two levels) with DCP	S2LVL	1	1 05	$0	$10 200	$10 200
08077658	Texas City Pump Station nr Texas City TX						
	Stage Station (one levels) with DCP	S1LVL	1	0 75	$0	$5 550	$5 550
08077740	LaMarque Levee Pump Station nr LaMarque TX						
	Stage Station (two levels) with DCP	S2LVL	1	0 90	$0	$8,800	$8 800
	Rain Gage Station	RSTAD	1	1 00	$0	$720	$720
	TOTAL SURFACE WATER				$0	$25 270	$25,270

SUMMARY GALVESTON COUNTY FY 2013

Project	USGS Cooperative Water Program Funds	Galveston County Funds	TOTAL GROSS COST
SURFACE WATER 001	$0	$25 270	$25,270
GRAND TOTALS	**$0**	**$25,270**	**$25,270**

Agreement # 13CSTX045000000
Customer # TX045
Project # SJ009ME
TIN # 74-6000908
USGS DUNS # 128821266

Form 9-1366
(Oct 2005)

U S Department of the Interior
U S Geological Survey
Joint Funding Agreement
FOR
Water Resources Investigations

Fixed Cost Agreement Yes [X] **No** [ ]

THIS AGREEMENT is entered into as of the 1st day of October, 2012, by the U S GEOLOGICAL SURVEY, UNITED STATES DEPARTMENT OF THE INTERIOR, party of the first part, and the Galveston County party of the second part

1 The parties hereto agree that subject to the availability of appropriations and in accordance with their respective authorities there shall be maintained in cooperation Texas Data Collection Program, herein called the program The USGS legal authority is 43 USC 36C, 43 USC 50, and 43 USC 50b

2 The following amounts shall be contributed to cover all of the cost of the necessary field and analytical work directly related to this program 2(b) include In-Kind-Services in the amount of $0 00

(a)	$0	by the party of the first part during the period October 01, 2012 to September 30, 2013
(b)	$25,270	by the party of the second part during the period October 01, 2012 to September 30, 2013

(c) Additional or reduced amounts by each party during the above period or succeeding periods as may be determined by mutual agreement and set forth in an exchange of letters between the parties

(d) The performance period may be changed by mutual agreement and set forth in an exchange of letters between the parties

3 The costs of this program may be paid by either party in conformity with the laws and regulations respectively governing each party

4 The field and analytical work pertaining to this program shall be under the direction of or subject to periodic review by an authorized representative of the party of the first part

5 The areas to be included in the program shall be determined by mutual agreement between the parties hereto or their authorized representatives The methods employed in the field and office shall be those adopted by the party of the first part to insure the required standards of accuracy subject to modification by mutual agreement

6 During the course of this program, all field and analytical work of either party pertaining to this program shall be open to the inspection of the other party, and if the work is not being carried on in a mutually satisfactory manner, either party may terminate this agreement upon 60 days written notice to the other party

7 The original records resulting from this program will be deposited in the office of origin of those records Upon request, copies of the original records will be provided to the office of the other party

8 The maps, records or reports resulting from this program shall be made available to the public as promptly as possible The maps, records or reports normally will be published by the party of the first part However, the party of the second part reserves the right to publish the results of this program and, if already published by the party of the first part shall, upon request, be furnished by the party of the first part, at cost, impressions suitable for purposes of reproduction similar to that for which the original copy was prepared The maps, records or reports published by either party shall contain a statement of the cooperative relations between the parties

9 USGS will issue billings utilizing Department of the Interior Bill for Collection (form DI-1040) Billing documents are to be rendered Quarterly Payments of bills are due within 60 days after the billing date If not paid by the due date, interest will be charged at the current Treasury rate for each 30 day period, or portion thereof, that the payment is delayed beyond the due date (31 USC 3717, Comptroller General File B-212222, August 23, 1983)

Form 9-1366
(Oct 2005)

U S Department of the Interior
U S Geological Survey
Joint Funding Agreement
FOR
Water Resources Investigations

Agreement # 13CSTX045000000
Customer # TX045
Project # SJ009ME
TIN # 74-6000908
USGS DUNS # 128821266

USGS Technical Point of Contact

Name	Michael Turco
	TX WSC Gulf Coast Program Office Chief
Address	19241 David Memorial Drive, Suite 180
	Shenandoah, TX 77385
Telephone	936-271-5312
Fax	936-271-5399
Email	mjturco@usgs gov

Customer Technical Point of Contact

Name	Layne Harding
	Road Administrator
Address	5115 Highway 3
	Dickinson, TX 77539
Telephone	281-534-4152
Fax	409-765-3247
Email	layne harding@co galveston tx us

USGS Billing Point of Contact

Name	Kandis Becher
	Budget Analyst
Address	2775 Altamesa Blvd
	Fort Worth, TX 76133
Telephone	817-263-9545 x225
Fax	817-361-0459
Email	kkbecher@usgs gov

Customer Billing Point of Contact

Name	Cliff Billingsley
	Auditor
Address	P O Box 1418
	Galveston, TX 77553
Telephone	409-770-5301
Fax	409-770-5397
Email	cliff billingsley@co galveston tx us

U S Geological Survey
United States
Department of the Interior

Signature

By _____ Date 8/1/2012
Name Robert L Joseph
Title Director

Galveston County

Signatures

By _____ Date 8/21/12
Name Mark Henry
Title County Judge

By _____ Date 8/8/12
Name Layne Harding
Title Road Administrator

By _____ Date _____
Name
Title

Attachment for TX045

USGS Station No	Description	CODE	No Units	Difficulty Factor	USGS Cooperative Water Program Funds	Galveston County Funds	TOTAL GROSS COST
001	**SURFACE WATER PROGRAM**						
08077650	Moses Lake-Galveston Bay nr Texas City TX						
	Stage Station (two levels) with DCP	S2LVL	1	1 05	$0	$10,200	$10,200
08077658	Texas City Pump Station nr Texas City TX						
	Stage Station (one levels) with DCP	S1LVL	1	0 75	$0	$5 550	$5 550
08077740	LaMarque Levee Pump Station nr LaMarque TX						
	Stage Station (two levels) with DCP	S2LVL	1	0 90	$0	$8 800	$8 800
	Rain Gage Station	RSTAD	1	1 00	$0	$720	$720
	TOTAL SURFACE WATER				$0	$25 270	$25 270

SUMMARY GALVESTON COUNTY FY 2013

Project	USGS Cooperative Water Program Funds	Galveston County Funds	TOTAL GROSS COST
SURFACE WATER 001	$0	$25 270	$25,270
GRAND TOTALS	**$0**	**$25,270**	**$25,270**

AGENDA ITEM #32a

Mark Henry

County Judge
County of Galveston

Galveston County Courthouse
722 Moody Avenue, Galveston, Texas 77550

Patricia Grady
Legal Liaison

Roxann Lewis
Executive Assistant

August 3, 2012

Boyd Thomure
240 3rd St
San Leon. TX 77539

Re *Request to Tax Assessor and Collector for refund/waiver of penalty and interest charges on Account No 6240-0024-0045-000*

Dear Boyd Thomure

Our office has received your request on the above referenced matter Your request will be brought before the Commissioners' Court of Galveston If you wish to address the Commissioners on this matter, you must appear and sign in with the County Clerk prior to the start of the meeting

Your request will be placed on the Commissioners' Court agenda for August 21, 2012 Court begins at 9 30 a m at the Galveston County Courthouse located at 722 Moody, 1st floor, Galveston, Texas

Please get there early to sign in with the County Clerk so that you may address Commissioners Court Please feel free to contact our office should you have any questions

Thank you in advance for your cooperation in this matter

Sincerely,

Mark Henry

MH/adg

409-766-2244 • 281-316-8300 Ext 2244 • Fax 409-765-2915

Cheryl E. Johnson, RTA

Assessor and Collector of Taxes
Galveston County
Galveston County Courthouse
722 Moody Avenue, Galveston, Texas 77550
Toll Free 877-766-2284 Fax 409-766-2479 Office 409-765-3277
Cheryl E Johnson@co galveston tx us

July 17, 2012

Mark Henry
Galveston County Judge
722 Moody
Galveston, Texas 77550

RE Request for refund of penalty & interest
Boyd Thomure
6240-0024-0045-000

Dear Judge Henry

Mr Thomure is requesting a refund of the penalty and interest on the above referenced account

The homeowner states he used the split pay option to pay his taxes but was unaware of the non-split tax portion for Dickinson ISD The homeowner received a tax statement that showed all taxes due and payment deadlines

This delinquency was not caused by an act or omission of an officer, employee or agent of the Tax Office or Central Appraisal District There are no provisions in the tax code to address this issue

Account No	Year	Waiver
6240-0024-0045-000	2011	$103 37

Sincerely,

Cheryl E Johnson

Notes

Go To

CRDER_R
ACT60122 v1.61

07/17/2013 08:54:44
GCTO_PROD

[redacted] Remittance [redacted]

Summary Query

Deposit No	Account No	Remit Seq No	Check No	Payment Amount
H062612M151	[redacted]			

Summary

Check Image	Deposit No	Receipt Date	Remit Seq No	Check No	Payment Type	Payment Amount	Applied Amount	Transaction Type	Account No	Payer
	[redacted]	[redacted]	[redacted]	[redacted]	[redacted]	[redacted]	[redacted]	[redacted]	[redacted]	[redacted]
	882120111P	11/30/2011	19208762	3140	CH	$324 93	$324.93	PA	624000240045000	THOMURE BOYD T & JU
	10CORL000020	12/20/2010	17139145	02199836	CH	$692,835 85	$1,343.21	PA	624000240045000	90010300-OCWEN LOA
	819081710PA	08/12/2010	16477117	2160402	CH	$1,887 48	$1 887 48	PA	624000240045000	20973550-OCEWEN LO
	829030909P	03/09/2009	13872441	1038	CH	$1,407 51	$1,407 51	PA	624000240045000	THOMURE BOYD T & JU
	632013008PA	01/30/2008	11008025	8643	CH	$1,267 51	$1,267 51	PA	624000240045000	1970409-JUDY A THOM
	RD367816	06/06/2007	9361819	77147	CH	$34 53-	$34 53-	RD	624000240045000	1758508-THE CYCLE SI
	RC070531	04/25/2007	9361819	1017	CH	$34 53-	$34 53-	TR	624000240045000	THOMURE BOYD T & JU
	RC070531	04/25/2007	9361819	1017	CH	$34 53	$34 53	TR	624000240045000	1758508-THE CYCLE SI
	572042507PA	04/25/2007	9361819	1017	CH	$1 591.39	$1,591 39	PA	624000240045000	THOMURE BOYD T & JU
	442060623	06/23/2006	128674		CH	$100.68	$100.68		624000240045000	128674-JUDY THOMURE
	542060424	04/24/2006	116794	8095	CH	$1,494.20	$1,494.20		624000240045000	116794-THOMURE BOY
	514050630	06/30/2005	3263675	LATER	CH	$1,557 78	$1,557 78		624000240045000	THOMURE BOYD T & JU
					Applied Total		$18 846.67			

6.29.12

BOYD T. THOMURE
ACCOUNT # 6240-0024-0054-000 45
CAD I.D. R 149055
PROPERTY ADDRESS 240 3rd ST 77539

I HEREBY PROTEST THE PAYMENT OF $221.52 IN TAX PENALTIES FOR THE FOLLOWING REASON; WHEN I WAS OFFERED THE OPPORTUNITY TO PAY MY PROPERTY TAXES IN 2 EQUAL PAMENTS, THE FACT THAT DICKINSON ISD WAS NOT ON BOARD WITH THE PROGRAM WAS NOT BROUGHT TO MY ATTENTION. IF IT HAD I SUREZY WOULD HAVE PAID IT. I FEEL THAT SINCE I PAID MY TAX IN PERSON AND THIS WAS NOT DISCLOSED TO ME, THAT I SHOULD NOT BE LIABLE FOR ANY PENALTIES.

I MAY BE CONTACTED BY MAIL AT THE ABOVE ADDRESS OR BY PHONE AT 281.627.9015 OR 281.280.0860. THANK YOU.

SINCERELY,
BOYD T. THOMURE

RECEIVED
JUL 03 2012
COLLECTIONS

Mark Henry

County Judge
County of Galveston

Galveston County Courthouse
722 Moody Avenue, Galveston, Texas 77550

Patricia Grady
Legal Liaison

Roxann Lewis
Executive Assistant

August 3. 2012

Ron & Kim Jorgensen
19333 Hwy 59 N Ste 100
Humble, TX 77338

Re *Request to Tax Assessor and Collector for refund/waiver of penalty and interest charges on Account No 5468-0000-0223-000 & 5468-0000-0224-000*

Dear Ron & Kim Jorgensen

Our office has received your request on the above referenced matter Your request will be brought before the Commissioners' Court of Galveston If you wish to address the Commissioners on this matter. you must appear and sign in with the County Clerk prior to the start of the meeting

Your request will be placed on the Commissioners' Court agenda for August 21, 2012 Court begins at 9 30 a m at the Galveston County Courthouse located at 722 Moody, 1st floor, Galveston, Texas

Please get there early to sign in with the County Clerk so that you may address Commissioners Court Please feel free to contact our office should you have any questions

Thank you in advance for your cooperation in this matter

Sincerely,

Mark Henry

MH/adg

409-766-2244 • 281-316-8300 Ext 2244 • Fax 409-765-2915

Cheryl E. Johnson, RTA

Assessor and Collector of Taxes
Galveston County
Galveston County Courthouse
722 Moody Avenue, Galveston, Texas 77550
Toll Free 877-766-2284 Fax 409-766-2479 Office 409-765-3277
Cheryl E Johnson@co galveston tx us

July 16, 2012

Mark Henry
Galveston County Judge
722 Moody
Galveston, Texas 77550

RE Request for Refund of Penalty & Interest
5468-0000-0223-000
5468-0000-0224-000
Kim & Ron Jorgensen

Dear Judge Henry

According to the Texas Property Tax Code Section 31 01 (g) " failure to send or receive the tax bill required by this section does not affect the validity of the tax, penalty, or interest, the due date, the existence of a tax lien, or any procedure instituted to collect a tax "

The homeowner purchased the property in July of 2011 and states the she never received a tax statement The 2011 tax statement was sent to the mortgage company of record

This delinquency was not caused by an act or omission of an officer, employee or agent of the Tax Office or Appraisal District

Account #	Years	Refund
5468-0000-0223-000	2011	$ 11 03
5468-0000-0224-000	2011	$154 52

Sincerely,

Cheryl E. Johnson

Cheryl E Johnson

RECEIVED
MAR 27 2012
GALVESTON COUNTY JUDGE

March 29, 2012

Commissioners Court
Attn: Henry

Re: Unpaid Taxes on
#130 N Mae Circle
Crystal, Beach, TX 77650

Parcel #546800000223000 and
Parcel #546800000224000

We purchased the beach house properties in June or July of 2011. We received a letter today from our finance company Flagstar Bank notifying us that we are delinquent on our property taxes.
I spoke with Martha at GCTO regarding the situation. She informed that the previous owner's mortgage company Chase requested and received the statement.
We NEVER received a statement because of this.
I mailed check today with full payment.

I need to request that I am refunded for Penalties and interest.

Thank you,

Kim and Ron Jorgensen
Kmjorgensen7@yahoo.com = Kim 281 744-9833
ron@ronjorgensen.com = Ron 713 299-7888

Appraisal & Collection Technologies - GALVESTON COUNTY

ORACLE

Notes

KELLYM

Account No			
Owner No	0		1 00
Parcel Address	130	MAE CIR N	
Roll Code	REAL PROPERTY		

2011	90088880	CHASE HOME FINANCE LLC
2010	90088880	CHASE HOME FINANCE LLC
2009	20088880	CHASE HOME FINANCE LLC
2008	20088880	CHASE HOME FINANCE LLC

Legal Description

ABST 203 PAGE 9 LOT 224 OCEAN SHORE

ADDN SEC 4

08/22/2011

103

JORGENSEN KIMBERLY M

130 MAE CIR N

CRYSTAL BEACH TX 77650-

start

Appraisal & Collection Technologies - GALVESTON COUNTY

ORACLE

Notes

REAL PROPERT

JORGENSEN KIMBERLY M

130 MAE CIR N

04/10/2012 0

2 210 601

AG INCLUDED

												$94 11
2010	$4,290			0			$85 09	$85 09	$ 00	$ 00	$ 00	$ 00	$ 00
2009	$4,290			0			$85 16	$85 16	$ 00	$ 00	$ 00	$ 00	$ 00
2008	$4,290			0			$81 72	$81 72	$ 00	$ 00	$ 00	$ 00	$ 00
2007	$4,290			0			$82 58	$82 58	$ 00	$ 00	$ 00	$ 00	$ 00
2006	$4,290			0			$98 40	$98 40	$ 00	$ 00	$ 00	$ 00	$ 00
2005	$2,710			0			$67 90	$67 90	$ 00	$ 00	$ 00	$ 00	$ 00
2004	$2,710			0			$68 94	$68.94	$ 00	$ 00	$ 00	$.00	$ 00
2003	$2,710			0			$64 92	$64.92	$ 00	$.00	$ 00	$.00	$ 00

start

Mark Henry

County Judge
County of Galveston

Galveston County Courthouse
722 Moody Avenue, Galveston, Texas 77550

Patricia Grady
Legal Liaison

Roxann Lewis
Executive Assistant

August 3, 2012

Jan Player
6504 Sea Isle
Galveston. TX 77554

Re *Request to Tax Assessor and Collector for refund/waiver of penalty and interest charges on Account No 4155-0004-0043-000*

Dear Jan Player

Our office has received your request on the above referenced matter Your request will be brought before the Commissioners' Court of Galveston If you wish to address the Commissioners on this matter, you must appear and sign in with the County Clerk prior to the start of the meeting

Your request will be placed on the Commissioners' Court agenda for August 21, 2012 Court begins at 9 30 a m at the Galveston County Courthouse located at 722 Moody, 1st floor, Galveston, Texas

Please get there early to sign in with the County Clerk so that you may address Commissioners Court Please feel free to contact our office should you have any questions

Thank you in advance for your cooperation in this matter

Sincerely,

Mark Henry

MH/adg

409-766-2244 • 281-316-8300 Ext 2244 • Fax 409-765-2915

Cheryl E. Johnson, RTA

Assessor and Collector of Taxes
Galveston County
Galveston County Courthouse
722 Moody Avenue, Galveston, Texas 77550
Toll Free 877-766-2284 Fax 409-766-2479 Office 409-765-3277
Cheryl F Johnson@co galveston tx us

July 16, 2012

Mark Henry
Galveston County Judge
722 Moody
Galveston, Texas 77550

RE Request for waiver of penalty & interest
Jan Player
Stewart Title/Harriet Dues
4155-0004-0043-000

Dear Judge Henry

The taxpayer is requesting a waiver of the penalty and interest on the above referenced account

The taxpayer states in April 2011 submitted a check for payment, however the check was never received by the Tax Office The homeowner has supplied evidence of the payment being submitted and is requesting fees be waived

There are no provisions in the Tax Code to address this issue

Account No	Year	Waiver
4155-0004-0043-000	2010	$ 115 46

Sincerely,

Cheryl E. Johnson

Cheryl E Johnson

April 17, 2012

Galveston County Tax Office
Re: Jan Player

Dear LaTonya,

On April 30, 2011 Stewart Title issued 2 checks for one tax account number. One of the checks was applied to the account while the other check was never credited. I spoke with an associate at the tax office and we issued a new check to pay that account in full. Now my seller is receiving tax bills for penalties and interest on that account number. I do not feel that the responsibility is his to pay nor Stewart Title's as we delivered both check simultaneously as he had 2 sales that given day.

I have tried to clear this issue for the past year and the fist young lady I was dealing with at the tax office had our original check in the back and I was told that they did not know where to apply the funds.

I have included a copy of our ledger and circled both checks that were issued to pay the account in full.

I look forward to a resolution.
Thank you,

Harriet Dues

Harriet Dues
Stewart Title Company
Branch Manager/Director of Marketing
409-763-4641
hdues@stewart.com

File Ledger

File Number: 1116730720 **Escrow Unit** 155-Stewart Title Galveston - M **Buyer:** Jan J Player **Project Description**

File Status: Closed **Bank Account:** HB-Hometown Bank (HB155/15 **Seller.** Lisa Marie Yates **Escrow Officer:** Dana Phillips

Unit Code	Acct. Code	C/I	Trans. Date	Posting Date	Paid Date	Deposit /CD Date	Deposit/CD Number	Type	St	Sc	Transaction Number	Debit	Credit	Balance	Name/Reason	Username/ Timestamp
155	HB	C	04/04/2011	04/04/2011	04/30/2011	04/04/2011	462	RC		EA	1414		$500 00	$500 00	Jan J Player	SHBHDues-4/4/2011 4 07 45 PM
155	HB	C	04/13/2011	04/13/2011	04/30/2011	04/13/2011	470	RC		DM	1444		$17 541 40	$18 041 40	Jan J Player	SHBBraRios-4/13/2011 11 20 26 AM
155	HB	C	04/13/2011	04/13/2011	04/30/2011			CK		DM	1555517	$15,231 08		$2,810 32	Lisa Marie Yates	SHBBraRios-4/13/2011 11 29 31 AM
155	HB	C	04/13/2011	04/13/2011	04/30/2011			CK		DM	1555518	$1,005 43		$1,804 89	Galveston Co Tax Collector	SHBBraRios-4/13/2011 11 29 33 AM
155	HB	C	04/13/2011	04/13/2011	04/30/2011			CK		DM	1555519	$300 00		$1,504 89	Isla Del Sol HOA	SHBBraRios-4/13/2011 11 29 36 AM
155	HB	C	04/13/2011	04/13/2011	04/30/2011			CK		DM	1555520	$200 00		$1,304 89	Isla Del Sol HOA	SHBBraRios-4/13/2011 11 29 40 AM
155	HB	C	04/13/2011	04/13/2011	04/30/2011			CK		DM	1555521	$11 25		$1,293 64	Isla Del Sol HOA	SHBBraRios-4/13/2011 11 29 42 AM
155	HB	C	04/13/2011	04/13/2011	04/30/2011			CK		DM	1555522	$110 00		$1,183 64	CKM Property Management, Inc	SHBBraRios-4/13/2011 11 29 45 AM
155	HB	C	04/13/2011	04/13/2011	04/30/2011			CK		DM	1555523	$225 00		$958 64	Lyons & Plackemeier	SHBBraRios-4/13/2011 11 29 47 AM
155	HB	C	04/13/2011	04/13/2011	04/30/2011			CK		DM	1555524	$297 69		$660 95	TLTS, INC	SHBBraRios-4/13/2011 11 29 49 AM
155	HB	C	04/13/2011	04/13/2011	04/21/2011	04/21/2011	2571	FT		DM	14322	$655 95		$5 00	Stewart Title Company	SHBBraRios-4/13/2011 11 20 51 AM
155	HB	C	04/13/2011	04/13/2011	05/31/2011	05/31/2011	3462	FT		DM	14323	$5 00		$0 00	Stewart Title Policy Gty Fee	SHBBraRios-4/13/2011 11 21 01 AM
												$18,041 40	$18,041 40	$0 00	HB - Hometown Bank (HB155/159)	
												$18,041 40	$18,041 40	$0 00	TOTALS	

File Ledger

File Number: 1116730721 **Escrow Unit:** 155-Stewart Title Galveston - M **Buyer** Mechelle Player **Project Description**

File Status. Closed **Bank Account:** HB-Hometown Bank (HB155/15 **Seller:** Lisa Marie Yates **Escrow Officer:** Dana Phillips

Unit Code	Acct. Code	C/I	Trans. Date	Posting Date	Paid Date	Deposit /CD Date	Deposit/CD Number	Type	St	Sc	Transaction Number	Debit	Credit	Balance	Name/Reason	Username/ Timestamp
155	HB	C	04/04/2011	04/04/2011	04/30/2011	04/04/2011	462	RC		EA	1415		$500 00	$500 00	Mechelle Player	SHBHDues-4/4/2011 4 12 31 PM
155	HB	C	04/13/2011	04/13/2011	04/30/2011	04/13/2011	470	RC		DM	1445		$17 541 40	$18,041 40	Mechelle Player	SHBBraRios-4/13/2011 11 45 08 AM
155	HB	C	04/13/2011	04/13/2011	04/30/2011			CK		DM	1555525	$15 231 08		$2 810 32	Lisa Marie Yates	SHBBraRios-4/13/2011 11 47 28 AM
155	HB	C	04/13/2011	04/13/2011	09/02/2011			CK		DM	1555526	$1,005 43		$1,804 89	Galveston Co Tax Collector	SHBBraRios-4/13/2011 11 47 31 AM
155	HB	C	04/13/2011	04/13/2011	04/30/2011			CK		DM	1555527	$300 00		$1,504 89	Isla Del Sol HOA	SHBBraRios-4/13/2011 11 47 33 AM
155	HB	C	04/13/2011	04/13/2011	04/30/2011			CK		DM	1555528	$200 00		$1 304 89	Isla Del Sol HOA	SHBBraRios-4/13/2011 11 47 36 AM
155	HB	C	04/13/2011	04/13/2011	04/30/2011			CK		DM	1555529	$11 25		$1 293 64	Isla Del Sol HOA	SHBBraRios-4/13/2011 11 47 38 AM
155	HB	C	04/13/2011	04/13/2011	04/30/2011			CK		DM	1555530	$110 00		$1,183 64	CKM Property Management, Inc	SHBBraRios-4/13/2011 11 47 40 AM
155	HB	C	04/13/2011	04/13/2011	04/30/2011			CK		DM	1555531	$225 00		$958 64	Lyons & Plackemeier	SHBBraRios-4/13/2011 11 47 42 AM
155	HB	C	04/13/2011	04/13/2011	04/30/2011			CK		DM	1555532	$297 69		$660 95	TLTS, Inc.	SHBBraRios-4/13/2011 11 47 44 AM
155	HB	C	04/13/2011	04/13/2011	04/21/2011	04/21/2011	2571	FT		DM	14328	$655 95		$5 00	Stewart Title Company	SHBBraRios-4/13/2011 11 46 59 AM
155	HB	C	04/13/2011	04/13/2011	05/31/2011	05/31/2011	3462	FT		DM	14329	$5 00		$0 00	Stewart Title Policy Gty Fee	SHBBraRios-4/13/2011 11 47 15 AM
155	HB	C	09/02/2011	09/02/2011	09/02/2011			CK	S P	DM	1555526		$1 005 43	$1,005 43	WIMS Stop Payment - Galveston Co Tax Collector	WIMS-9/2/2011 8 37 09 AM
155	HB	C	09/12/2011	09/12/2011	09/21/2011			CK		DM	1557052	$1,005 43		$0 00	Galveston Co Tax Collector	SHBBraRios-9/12/2011 9 56 54 AM
												$19,046 83	$19 046 83	$0 00	HB - Hometown Bank (HB155/159)	
												$19,046.83	$19,046.83	$0.00	TOTALS	

HomeTown Bank

Account Number:	86770
Capture Date:	September 14, 2011
Item Number:	5250061001245
Posted Date:	September 14, 2011
Posted Item Number:	405131
Serial Number:	1557052
Amount:	1,005.43

STEWART TITLE
1980 POST OAK BLVD
STE 1420
HOUSTON TX 77056

ORIGINAL CHECK HAS A COLORED BACKGROUND PRINTED ON CHEMICAL REACTIVE PAPER - SEE BACK FOR DETAILS

Stewart Title Company
Escrow Accounts
222 Kempner, P. O. Box 1540, Galveston, TX 77553
(409)763-4541

Hometown Bank
Galveston, TX 77552

1557052

File: 1116730721

Date 9/12/2011

Pay One Thousand Five Dollars and Forty Three Cents $1,005.43

TO THE ORDER OF
Galveston Co Tax Collector
P O Box 1189
Galveston, TX 77553

4155-0004-0043-000

⑈1557052⑈ ⑆113100570⑆ 0086770⑈

ENDORSE HERE

For Deposit Only
Tax Assessor/Collector
Galveston County Tax Office
Tax Account #301000642

09-13-2011

Account Number:	86770
Capture Date:	April 19, 2011
Item Number:	5250050815583
Posted Date:	April 19, 2011
Posted Item Number	306308
Serial Number:	1555518
Amount:	1,005.43

HomeTown Bank NA

STEWART TITLE
1980 POST OAK BLVD
STE 1420
HOUSTON TX 77056

ORIGINAL CHECK HAS A COLORED BACKGROUND PRINTED ON CHEMICAL REACTIVE PAPER - SEE BACK FOR DETAILS

601 **Stewart Title Company** 41 550004004 3000 4-14-11

Escrow Accounts
222 Kempner, P. O. Box 1540, Galveston, TX 77553
(409)763-4641

Hometown Bank
Galveston, TX 77552

1555518

Date
4/13/2011

Pay One Thousand Five Dollars and Forty Three Cents $1,005.43

TO THE ORDER OF
Galveston Co Tax Collector
P O Box 1169
Galveston, TX 77553

File: 1116738720

⑈1555518⑈ ⑆113100570⑆ 0086770⑈

ENDORSE HERE

X

For Deposit Only
DO NOT WRITE, STAMP OR SIGN BELOW THIS LINE
Tax Assessor/Collector
Galveston County Tax Office
Tax Account #3010006421

FEDERAL RESERVE BOARD OF GOVERNORS PAT. CC

34-18-2011

Account Status

Prev Account Next Account Acct History Notes Go To.

DOMINICK_L
ACT8006 v1 219

03/27/2012 14 56 03
GCTO_PROD

STATUS DETAIL Expand Fees Summary

Account Information

Account No [redacted] Roll Code REAL PROPERT

Certified Owner PLAYER JAN

Address Line 6504 SEA ISLE

Amount Due as of 03/27/2012 Owner No 0

Tax Units Tax Unit Description

List of Tax Units
1 2 210 330 601 8003

Tax Unit,Yr, Rec. Type

Tax Unit

Year

Rec Type

Countywide

Multi Select

Amount Due/Paid Information

Year	Appr Value	H O V D	Base Levy	Paid Levy	Write-Off	Remaining Levy	Fees	Refund	Amount Due
2011	$17,500	0	$442 80	$442 80	$ 00	$ 00	$ 00	$ 00	$ 00
2010	$71,400	0	$1,811 59	$1,734 00	$ 00	$77 59	$35 08	$ 00	$112 67
2009	$71,400	0	$1,812 85	$1,812 85	$ 00	$ 00	$906 44	$ 00	$ 00
2008	$71,400	0	$1,712 89	$1,712 89	$ 00	$ 00	$256 94	$ 00	$ 00
2007	$71,400	0	$1,727 17	$1,727 17	$ 00	$ 00	$ 00	$ 10	$ 00
2006	$71,400	0	$1,990 46	$1,990 46	$ 00	$ 00	$307 11	$ 00	$ 00
2005	$42,000	0	$1 279 85	$1,279 85	$ 00	$ 00	$ 00	$ 00	$ 00
2004	$12,820	0	$395 57	$395 57	$ 00	$ 00	$ 00	$ 00	$ 00
2003	$12,820	0	$376 51	$376 51	$ 00	$ 00	$ 00	$ 00	$ 00
Last Payment Date		Totals	$12,706 59	$12,629 88	$.00	$77.59	$1,628 75	$ 10	$112 67
Last Payer									

latonya.dominick@gal.co.tx.us

In April of 2011 we sent in 2 checks for 2 lots under one account #. Seller had both lots under one account #. CAD only applied one check and sent seller a tax bill for money owed. Stewart Title received notice in september issued a "stop pay" and a new check thus incurring interest.

Stewart Title — Harriet Duss

Mark Henry

County Judge
County of Galveston

Galveston County Courthouse
722 Moody Avenue, Galveston, Texas 77550

Patricia Grady
Legal Liaison

Roxann Lewis
Executive Assistant

August 3, 2012

Gerald & Frances Gambino
3202 29TH ST N
Texas City, TX 77590

Re *Request to Tax Assessor and Collector for refund/waiver of penalty and interest charges on Account No 4240-0000-0122-003*

Dear Gerald & Frances Gambino

Our office has received your request on the above referenced matter Your request will be brought before the Commissioners' Court of Galveston If you wish to address the Commissioners on this matter, you must appear and sign in with the County Clerk prior to the start of the meeting

Your request will be placed on the Commissioners' Court agenda for August 21, 2012 Court begins at 9 30 a m. at the Galveston County Courthouse located at 722 Moody, 1st floor, Galveston, Texas

Please get there early to sign in with the County Clerk so that you may address Commissioners Court Please feel free to contact our office should you have any questions

Thank you in advance for your cooperation in this matter

Sincerely,

Mark Henry

MH/adg

409-766-2244 • 281-316-8300 Ext 2244 • Fax 409-765-2915

Cheryl E. Johnson, RTA

Assessor and Collector of Taxes
Galveston County
Galveston County Courthouse
722 Moody Avenue, Galveston, Texas 77550
Toll Free 877-766-2284 Fax 409-766-2479 Office 409-765-3277
Cheryl E Johnson@co galveston tx us

July 16, 2012

Mark Henry
Galveston County Judge
722 Moody
Galveston, Texas 77550

RE Request for refund of penalty & interest
Gerald and Frances Gambino
4240-0000-01022-003

Dear Judge Henry

Mr and Mrs Gambino are requesting a waiver of penalty and interest on the above referenced account

The homeowner states in November 2011 a check was submitted for payment, however the check was never received by the Tax Office The homeowner has supplied evidence of the payment being submitted and is requesting the fees to be refunded

There are no provisions in the Tax Code to address this issue

Account No	Year	Refund
4240-0000-0122-003	2011	$52 01

Sincerely,

Cheryl E. Johnson

ON 11/14/11 I G.D GAMBINO PAID G.C.T.O. #48129 CK #6072, AROUND MARCH OF 2012 I RECEIVED A PHONE CALL FROM SOMEONE REMINDING ME MY TAXES WERE DUE. I INFORMED HER THAT I HAD ALREADY PAID THEM ON 11/14/11 AND GAVE HER THE CK#. SHE SAID IT WAS PROBABLY NOT FILED PROPERLY, BUT NOT TO WORRY AS SHE WOULD LOCATE IT.

TODAY 6/4/12 I CAME TO THE TAX OFFICE TO FIND OUT WHAT TO DO AS I RECEIVED ANOTHER NOTICE TELLING ME MY TAXES WERE NOT PAID AND I NOW OWE $553.49. I SPOKE WITH C.K. WHO SPOKE WITH RACHEL CRIDER WHO ADVISED TO PAY TODAYS AMOUNT & SHE WOULD INVESTIGATE TO SEE IF I CAN GET A RE-IMBURSMENT FOR THE DIFFERANCE OF $52.20 THANK-YOU!

G.D. Gambino

Rachael Crider

MAINLAND BANK
Member FDIC
331 PALMER HIGHWAY PO BOX 3957 TEXAS CITY TEXAS 77592 3957
http://www.mainlandbank.com (409) 948-1625

DATE 11/30/2011

G D GAMBINO
FRANCES GAMBINO
3202 29TH ST N
TEXAS CITY, TX 77590

Now Accounts

STATEMENT OF ACCOUNT

ACCOUNT NO. 6099485

SUMMARY OF ACTIVITY SINCE LAST STATEMENT

	BALANCE FORWARD FROM 11/01/2011	7,651 05
2	DEPOSITS/CREDITS	2,834.14+
8	WIDTHDRAWALS/DEBITS	1,956 02-
0	BANK CHARGES	0 00-
1	INTEREST PAID.	0 63+
	ENDING BALANCE AS OF 11/30/2011	8,529 80

INTEREST SUMMARY

INTEREST EARNED FROM	11/01/2011
INTEREST EARNED THROUGH	11/30/2011
DAYS IN EARNINGS PERIOD	30
ANNUAL PERCENTAGE YIELD EARNED	0 100%
INTEREST PAID IN 2011	15 46

TRANSACTION DETAIL FOR THIS ACCOUNT

Deposits and Other Credits

DESCRIPTION	AMOUNT	DATE
Ach deposit SAND DOLLAR CHRY SEMI	1,417 07	11/15
Ach deposit SAND DOLLAR CHRY SEMI	1,417 07	11/30
Interest Credit	0 63	11/30

Withdrawals Other Debits

DESCRIPTION	AMOUNT	DATE
Ach withdrawal CPEnergy Entex CPE ACH CHECK# 000000006066	35 13	11/02
Ach withdrawal AT&T SERVICES DA CHECK PYMT CHECK# 000000006070	46 34	11/17

Notes

DESCRIPTION	AMOUNT	DATE
Effective Interest Rate 0 10000%		11/01

CHECKS (* - Gap In Sequence)

NUMBER	AMOUNT	DATE	NUMBER	AMOUNT	DATE	NUMBER	AMOUNT	DATE
6068	38 88	11/16	6071*	408 00	11/17	6074	293 46	11/21
6069	278 70	11/21	6073*	192 13	11/17	6075	663 38	11/22

BALANCE SUMMARY

DATE	BALANCE	DATE	BALANCE	DATE	BALANCE	DATE	BALANCE
Start	7,651 05	11/15	9,032 99	11/21	7,775 43		
11/01	7,651 05	11/16	8,994 11	11/22	7,112 10		
11/02	7,615 02	11/17	8,347 64	11/30	8,529 80		

Mainland Bank

G. D. GAMBINO
TEXAS CITY, TX 77590
6068
DATE 11-14-11
PAY TO THE ORDER OF CITY OF TEXAS CITY $ 38.88
Thirty Eight & 88/100 DOLLARS
MAINLAND BANK
FOR 77120
⑆111310207③⑆ 6068 609 948 5#

G. D. GAMBINO
TEXAS CITY, TX 77590
6069
DATE 11-14-11
PAY TO THE ORDER OF SAMS CLUB $ 278.79
Two Hundred & Seventy Eight & 79/100 DOLLARS
MAINLAND BANK
FOR 2133
⑆111310207③⑆ 6069 609 948 5#

G. D. GAMBINO
TEXAS CITY, TX 77590
6071
DATE 11-14-11
PAY TO THE ORDER OF PROGRESSIVE $ 408.00
Four Hundred & Eight Dollars & 00/100 DOLLARS
MAINLAND BANK
111611 000417 078 3259181A
FOR 1814-7
⑆111310207③⑆ 6071 609 948 5# ⑈0000040800⑈

G. D. GAMBINO
TEXAS CITY, TX 77590
6073
DATE 11-14-11
PAY TO THE ORDER OF STREAM ENERGY $ 192.13
One Hundred & Ninety Two & 13/100 DOLLARS
MAINLAND BANK
FOR 7494
⑆111310207③⑆ 6073 609 948 5# ⑈0000019213⑈

G. D. GAMBINO
TEXAS CITY, TX 77590
6074
DATE 11-14-11
PAY TO THE ORDER OF TEXAS CITY ISD-TAX OFFICE $ 293.46
Two Hundred & Ninety Three & 46/100 DOLLARS
MAINLAND BANK
FOR 4240 0800 0122 003
⑆111310207③⑆ 6074 609 948 5# ⑈0000029346⑈

G. D. GAMBINO
TEXAS CITY, TX 77590
6075
DATE 11-16-11
PAY TO THE ORDER OF CAPITAL ONE $ 663.35
Six Hundred & Sixty Three & 35/100 DOLLARS
MAINLAND BANK
FOR 6215
⑆111310207③⑆ 6075 609 948 5#

Ck # 6072

TAX RECEIPT

CHERYL E. JOHNSON, RTA
TAX ASSESSOR-COLLECTOR
722 Moody
Galveston, TX 77550

Certified Owner

GAMBINO GERALD D & FRANCES
3202 29TH ST N
TEXAS CITY, TX 77590-3811

Legal Description:
ABST 142 PAGE 1 PT OF LOT 122 (122-3)
JEMISON ADDN

Parcel Address 3202 29TH ST N
Legal Acres: 0.3380

Remit Seq No 20962173
Receipt Date 06/04/2012
Deposit Date: 06/04/2012
Print Date 06/04/2012

Deposit No 682060412P
Validation No: 900000025913015
Account No: 4240-0000-0122-003
Operator Code KARNS_C

Year	Tax Unit Name	Tax Value	Tax Rate	Levy Paid	P&I	Coll Fee Paid	Total
2011	Galveston Co	37,656	0.612945	230.81	34.62	0.00	265.43
2011	Road & Flood	34,656	0.008855	3.07	0.46	0.00	3.53
2011	Texas City	37,656	0.425000	160.04	24.01	0.00	184.05
2011	Mainland Coll	37,656	0.232020	87.37	13.11	0.00	100.48
				$481.29	$72.20	$0.00	$553.49

©2008 Artistic Checks 1-800-224-7623 www.artistischeckcorp.com

G. D. GAMBINO
3202 29TH ST N
TEXAS CITY TX 77590

88-207/1131
EZ Shield Check Fraud Protection

6128

DATE 6-4-12

PAY TO THE ORDER OF G C T O. $ 553.49

Five Hundred & Fifty Three 49/xx DOLLARS

MAINLAND BANK
R187210

FOR Paid 48129 11/14 ? A D Gambino

$553.49

⑆113102073⑆ 6128 609 948 5⑈

HOMESTEAD

Total Applied: $553.49
Total Tendered $553.49
(for accounts paid on 06/04/2012)
Change Paid: $0.00

ACCOUNT PAID IN FULL

PAYER
GAMBINO GERALD D & FRANCES
3202 29TH ST N
TEXAS CITY, TX 77590-3811

Mark Henry

County Judge
County of Galveston

Galveston County Courthouse
722 Moody Avenue, Galveston, Texas 77550

Patricia Grady
Legal Liaison

Roxann Lewis
Executive Assistant

August 3, 2012

James & Julie Crawford
1836 Lake Landing Dr
League City. TX 77573

Re *Request to Tax Assessor and Collector for refund/waiver of penalty and interest charges on Account No 7602-3003-0006-000*

Dear James & Julie Crawford

Our office has received your request on the above referenced matter Your request will be brought before the Commissioners' Court of Galveston If you wish to address the Commissioners on this matter, you must appear and sign in with the County Clerk prior to the start of the meeting

Your request will be placed on the Commissioners' Court agenda for August 21, 2012 Court begins at 9:30 a m at the Galveston County Courthouse located at 722 Moody, 1st floor, Galveston, Texas

Please get there early to sign in with the County Clerk so that you may address Commissioners Court Please feel free to contact our office should you have any questions

Thank you in advance for your cooperation in this matter.

Sincerely,

Mark Henry

MH/adg

409-766-2244 • 281-316-8300 Ext 2244 • Fax 409-765-2915

Cheryl E. Johnson, RTA

Assessor and Collector of Taxes
Galveston County
Galveston County Courthouse
722 Moody Avenue, Galveston, Texas 77550
Toll Free 877-766-2284 Fax 409-766-2479 Office 409-765-3277
Cheryl F Johnson@co galveston tx us

July 17, 2012

Mark Henry
Galveston County Judge
722 Moody
Galveston, Texas 77550

RE Request for refund of penalty & interest
James & Julie Crawford
7602-3003-0006-000

Dear Judge Henry

The property owner states that he mailed a check March 1, 2012 to pay his taxes but it never cleared his bank He issued a second check in June to pay his taxes plus penalties and interest The 2011 tax statement was delivered and all taxes were due January 31st

There are no provisions in the Tax Code to address this issue

Account No	Year	Refund
7602-3003-0006-000	2011	$ 401 16

Sincerely,

Cheryl E. Johnson

Cheryl E Johnson

Cheryl E. Johnson, RTA
Tax Assessor-Collector
722 Moody
Galveston, TX 77550

June 13, 2012

I am writing in regards to Acct. No. 7602-3003-0006-000, the address is 1836 Lake Landing Drive.

I mailed a check to your office March 1, 2012, the check number 288 in the amount of $7,287 46. The check was either lost in the mail or lost in your office, I have issued a second check for the amount of $7,688 62.

Please consider waiving the late fee since we did send a check on time and have never been late in the previous years. Thank you.

Sincerely,

Julie P. Crawford

Julie P Crawford

CHERYL E. JOHNSON, RTA
Galveston County Tax Assessor Collector
722 Moody, Galveston, Texas 77550
(Toll Free) 877-766-2284 or 409-766-2481

2011 Consolidated Tax Statement

Property Location 1836 LAKE LANDING DR 77573
Acreage 1 2000
Legal Description
WHISPERING LAKES SEC 1 PH 3 (2005) ABST 630, BLOCK 3, LOT 6, ACRES 1 200

ACCOUNT # 760230030006000 CAD # R425140

D059764038003 T113 N264

CRAWFORD JAMES B & JULIE P
1836 LAKE LANDING DR
LEAGUE CITY TX 77573-7781

Appraised Land Value	$151,810
Improvements/Personal Property Value	+487,120
Total Market Value	$638,930
Homestead Cap Adjustment	

MTG/Agent
Sales Tax Savings $436 50
Assessment Ratio 100%

Entity	Market Value -	Exemptions =	Taxable Value ÷ 100 x	Tax Rate =	Total Taxes
GALVESTON CO	$638,930	$127,786	$511,144	61294500	$3,133 03
ROAD & FLOOD	$638,930	$130,786	$508,144	00885500	$45 00
LEAGUE CITY	$638,930	$63,893	$575,037	61000000	$3,507 73
TOTAL 2011 TAXES					**$6,685.76**

Current Exemptions According to Appraisal District HOMESTEAD

Should you have questions regarding the exemptions or wish to update address or ownership information contact the Galveston Central Appraisal District at 1-866-277-4725 or the Harris County Appraisal District at 713-957-7800 *(depending on the county where the property is located)*

New Payment Option Available!

PROPERTY TAX PAYMENT OPTIONS*

PAYMENT IN FULL Must be USPS postmarked by January 31 2012, unless you qualify for a payment option below

SPLIT PAYMENT Allows current year taxes to be paid in 2 equal installments without penalty and interest if proper amounts are paid by deadlines Most governments offer this payment option Those not participating are shown below

INSTALLMENT PAYMENTS FOR QUALIFIED OVER-65, DISABLED PERSON & PROPERTY OWNERS DAMAGED BY GOVERNOR DECLARED DISASTER (drought) A person who is disabled or over 65 years of age may be eligible to make four equal installment payments on their homesteaded property *(if you already qualify, amounts will be listed in the box below)* and may also defer or delay payment Owners of property damaged by the drought may also be eligible to make installment payments provided proper amounts are paid by due dates shown Payment coupons for split payments and O65 and DP payment plans will be mailed by March 1 2012

***Please contact your mortgage company before participating in partial payment options!**

Split Payment Option *(1/2 by November 30, 2011)*

Entity	Amount Due
GALVESTON CO	$3,133 03
ROAD & FLOOD	$45 00
LEAGUE CITY	$3,507 73
1ST payment by 11/30/11 of	**$3,342 88**
2ND payment by 7/2/12 of	**$3,342 88**

O-65, Disabled & Disaster Payment Option *(1/4 by January 31, 2012)*

Payment Due Date	Amount Due
January 31, 2012	
April 2, 2012	
May 31, 2012	
July 31, 2012	

Total Taxes Due by Month

Month	2011 Taxes	Prior Year Taxes	Total
If paid in October	$6,685 76	$ 00	$6,685 76
If paid in November	$6,685 76	$ 00	$6,685 76
If paid in December	$6,685 76	$ 00	$6,685 76
If paid in January	$6,685 76	$ 00	$6,685 76
If paid in February	$7,153 76	$ 00	$7,153 76

*Our records indicate delinquent taxes are due for the following tax years

Non-Split Pay Taxes Due *(by January 31, 2012)*

Total Due January 31, 2012	**$ 00**

Please send this coupon with check, money order or cashier s check payable to GCTO in the enclosed envelope
Correspondence, ownership or other changes should be mailed separately to Property Tax Dept 722 Moody, Galveston, TX 77550

ACCOUNT # 7602-3003-0006-000
CAD # R425140

CRAWFORD JAMES B & JULIE P
1836 LAKE LANDING DR
LEAGUE CITY TX 77573

Credit card checks NOT accepted A $25 fee will be charged for all returned checks **Select a payment option below**

- [ ] First half split payment by 11/30/11
- [ ] O65/DP/Disaster ¼ payment by 1/31/12
- [ ] Full payment by 1/31/12
- [ ] Please mail postcard receipt

000000R425140 0000668576 0000668576 0000668576 0000668576 0

Notes

Go To

CRIDER_R
ACT80122 v1 81

07/17/2012 12:30:39
GCTO_PROD

[redacted] Remittance [redacted]

Summary Query

Deposit No: 7630614201 2P

Account No: [redacted]

Remit Seq No

Check No

Payment Amount

Summary

Check Image	Deposit No	Receipt Date	Remit Seq No	Check No	Payment Type	Payment Amount	Applied Amount	Transaction Type	Account No	Payer
	[redacted]	[redacted]	[redacted]	[redacted]	CH	[redacted]	[redacted]	[redacted]	[redacted]	[redacted]
■	L013111M151	01/28/2011	17937693	0000000000122	CH	$8,755 77	$8,755 77	PA	760230030006000	CRAWFORD JAMES B &
	679020110P	01/31/2010	15857655	984	CH	$6 842 60	$6,842.60	PA	760230030006000	CRAWFORD JAMES B &
	L020209MR	02/04/2009	13603987	000000000015	CH	$8,322 61-	$8,322.61-	RV	760230030006000	CRAWFORD JAMES B &
■	L020209M151	01/31/2009	13613414	000000000015	CH	$8,322.61	$8,322.61		760230030006000	CRAWFORD JAMES B &
■	L020209M TXT	01/30/2009	13603987	000000000015	CH	$8,322 61	$8,322.61		760230030006000	CRAWFORD JAMES B &
	LC20080131	01/31/2008	3436	412	CH	$3,078 71	$3,078 71	PA	760230030006000	SMITH KIRBY P & PATRI
	RDLC20080131	01/31/2008	3436	412	CH	$342.08-	$342.08-	RD	760230030006000	SMITH KIRBY P & PATRI
	RFLC20080131	01/31/2008	3436	412	CH	$342.08	$342.08	RF	760230030006000	SMITH KIRBY P & PATRI
	LC20070131	01/31/2007	3924	0	CH	$2,571 33	$2 571 33	PA	760230030006000	SMITH KIRBY P & PATRI
	LC20051114	11/14/2005	29905	6145	CH	$2,632 36	$2,632.36	PA	760230030006000	SMITH KIRBY P & PATRI
■	L013008M151	01/29/2008	11112405	000000000040	CH	$2 606.83	$2,606.83		760230030006000	CRAWFORD JAMES B &
	L1450151	01/31/2007	8865911	0000001241	CH	$2,022 77	$2,022 77		760230030006000	CRAWFORD JAMES B &
					Applied Total		$42,631.35			

Mark Henry

County Judge
County of Galveston

Galveston County Courthouse
722 Moody Avenue, Galveston, Texas 77550

Patricia Grady
Legal Liaison

Roxann Lewis
Executive Assistant

August 3, 2012

Don & Donna Bryson
674 Meadowgreen Dr
Port Neches, TX 77651

Re *Request to Tax Assessor and Collector for refund/waiver of penalty and interest charges on Account No 4467-0003-0010-000*

Dear Don & Donna Bryson

Our office has received your request on the above referenced matter Your request will be brought before the Commissioners' Court of Galveston If you wish to address the Commissioners on this matter, you must appear and sign in with the County Clerk prior to the start of the meeting

Your request will be placed on the Commissioners' Court agenda for August 21, 2012 Court begins at 9 30 a m at the Galveston County Courthouse located at 722 Moody, 1st floor, Galveston, Texas

Please get there early to sign in with the County Clerk so that you may address Commissioners Court Please feel free to contact our office should you have any questions

Thank you in advance for your cooperation in this matter

Sincerely,

Mark Henry

MH/adg

409-766-2244 • 281-316-8300 Ext 2244 • Fax 409-765-2915

Cheryl E. Johnson, RTA

Assessor and Collector of Taxes
Galveston County
Galveston County Courthouse
722 Moody Avenue, Galveston, Texas 77550
Toll Free 877-766-2284 Fax 409-766-2479 Office 409-765-3277
Cheryl E Johnson@co galveston tx us

July 17, 2012

Mark Henry,
Galveston County Judge
722 Moody
Galveston, Texas 77550

RE Request for refund of penalty & interest
Donna Bryson
4467-0003-0010-000

Dear Judge Henry

Mrs Bryson is requesting a refund of penalty and interest on the account referenced above She states her payment was mailed from the Post Office January 28, 2012 However, the envelope received by the Tax Office (Lockbox) shows a postmark date of February 4, 2012

Texas Property Tax Code Section 1 08, **Timeliness of Action by Mail**, states "when a property owner is required by this title to make a payment or to file or deliver a report, application, statement, or other documentation or paper before a specified date, his action is timely if

1 It is sent by regular first-class mail, properly addressed with postage prepaid, and
2 It bears a post office cancellation mark of a date earlier than the specified date and within the specified period of the property owner furnishes satisfactory proof that it was deposited in the mail before the specified date and within the specified period "

Account Numbers	Year	Refund
4467-0003-0010-000	2011	$466 39

Sincerely,

Cheryl E Johnson

Judge Mark Henry,

I am sorry to ask for your help concerning late taxes which were out of my control. The tax office said they did not Receive our taxes until Feb. 6th. I sent then Jan.28th. I do not know why there was a mix-up,but due to unknowing information it happened. I did not know I owed anything extra for taxes until 4 days ago. I received a letter 4 days ago saying I owed $466.39 in late fees. I feel I am totally innocent since I thought everything was up to date. I tried to do what was right however, I am still being charged late fees. I sent $466.39 to the tax office so I would not be charged any more money. Hopefully I will get a refund for that amount. I am 70 years old and I truly hope you will advise me and help me with this situation.

Thank you for your time,

Donna Bryson

674 Meadowgreen

Port Neches Tx. 77651 (brysonbeach@sbcglobal.net)

Acct. #4467-0003-0010-000 466.39
GCAD acct #R179270
3297 Prides Way
Lafittes Landing 77650

[Retrieve Image By Name]

Image: 120206/2005-2-F.tif.png

(499 of 520)

< previous next >

Please send this coupon with check, money order or cashier's check payable to GCTO in the enclosed envelope
Correspondence, ownership or other changes should be mailed separately to: Property Tax Dept., 722 Moody, Galveston, TX 77550.

ACCOUNT #: 4467-0003-0010-000
CAD #: R179270

BRYSON DON & DONNA
674 MEADOWGREEN DR
PORT NECHES TX 77651-6018

Credit card checks NOT accepted. A $25 fee will be charged for all returned checks. Select a payment option below:

- [ ] First half split payment by 11/30/11
- [ ] O65/DP/Disaster ½ payment by 1/31/12
- [ ] Full payment by 1/31/12
- [x] Please mail postcard receipt

000000R179270 0000619950 0000619950 0000619950 0000619950 1

[Retrieve Image By Name]

Image: 120206/2005-4-F.tif.png

(503 of 520)

< previous next >

DON OR DONNA BRYSON
674 MEADOWGREEN DR
PORT NECHES, TX 77651

5153
88-8764/3131

1-28-12
DATE

PAY TO THE ORDER OF Cheryl E. Johnson, RTA $ 6524.59

Six Thousand Five Hundred Twenty-Four 59/100 DOLLARS

MCT Credit Union

FOR ACCT # 4467000700100000

Donna Bryson

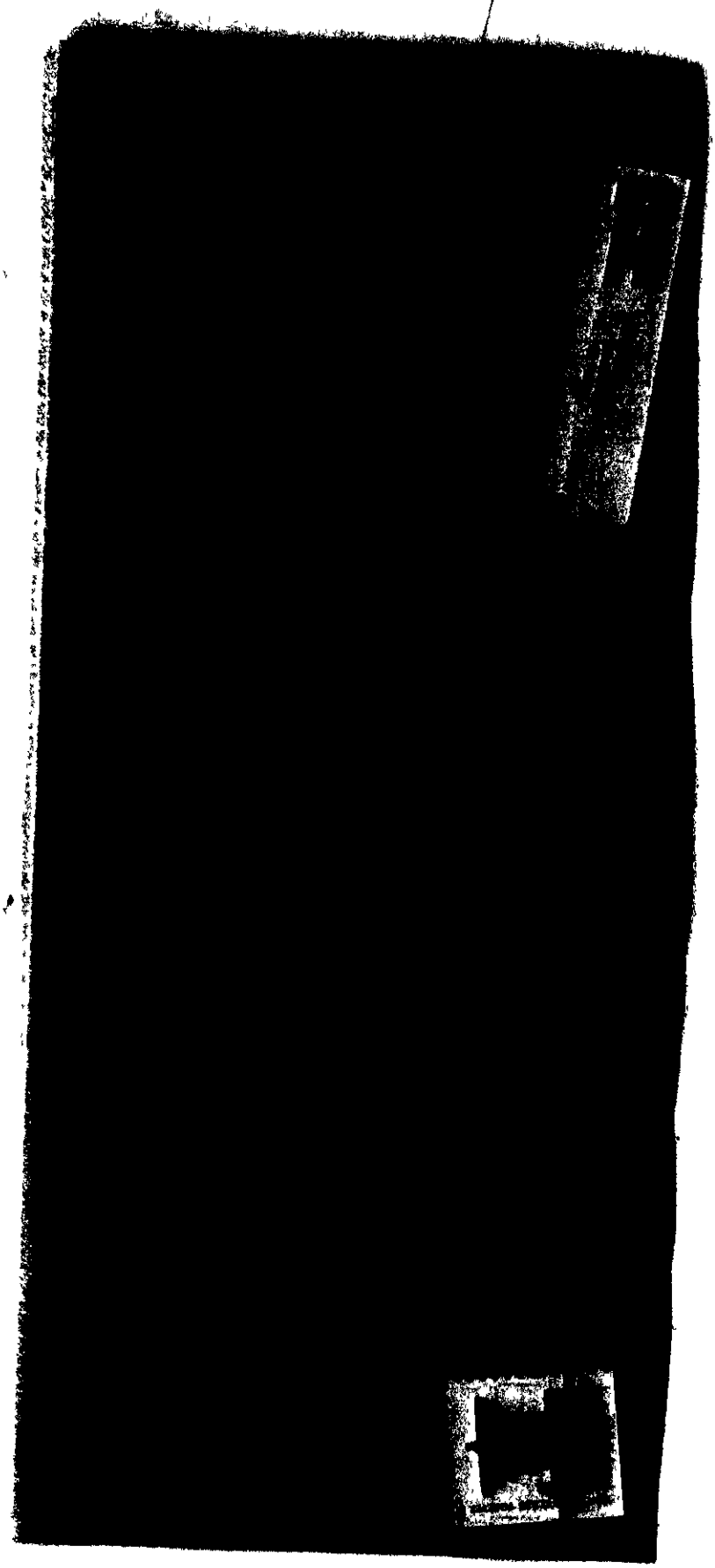

AGENDA ITEM #32b

Cheryl E. Johnson, RTA

Assessor and Collector of Taxes
Galveston County
Galveston County Courthouse
722 Moody Avenue, Galveston, Texas 77550
Toll Free 877-766-2284 Fax 409-766-2479 Office 409-765-3277
Cheryl E Johnson@co galveston tx us

July 12, 2012

Mark Henry,
Galveston County Judge
722 Moody
Galveston, Texas 77550

RE Request for Refund of Penalty & Interest
1999-0001-0006-000
Chris L. Johnson

Dear Judge Henry

Mr Johnson is requesting a refund of the penalty and interest collected on the account number referenced above. Mr Johnson states he never received a tax bill and this was the first year they have paid taxes on their own as they have always had an escrow account. Our records show the tax statement was mailed to the mortgage company listed on the account

According to the Texas Property Tax Code Section 31.01 (g) "... failure to send or receive the tax bill required by this section does not affect the validity of the tax, penalty, or interest, the due date, the existence of a tax lien, or any procedure instituted to collect a tax."

This delinquency was not caused by an act or omission of an officer, employee or agent of the Tax Office or Appraisal District

Account #	Years	Refund
1999-0001-0006-000	2011	$ 164.58

Sincerely,

Cheryl E. Johnson

Cheryl E. Johnson

Chris and Naima Johnson

2111 Bataan Dr.

League City, Tx 77573

Account Number 1999-0001-0006-000

To Whom it May Concern,

This letter is in regards to our 2012 Property Tax information. We received a yellow delinquent card in the mail in late February stating that we haven't paid our property taxes and other fees had been applied to our account. Our concern is, we never received an original bill or any bill with our account information and total amount due.

This is our first time paying all of our taxes on our own, as in the past we used our Bank Escrow account. I spoke with a Galveston County representative and was told that our original bill and any other information went to the bank and was never mailed to our address.

It was suggested that we send this letter in protest for a refund for those extra late fees that were added to our account. Our original amount due was $1,828.70 and we paid $1,993.28 because of the late fees. Please look into this and get back with us as soon as possible.

We appreciate your time and effort into this matter.

Mr. and Mrs. Chris Johnson

281-332-5385

2011 P&I = 164.58

ORACLE

0 | 1.00

2111 | BATAAN DR

REAL PROPERTY

2011	117	BAC TAX SERVICES CORP
2010	117	BAC TAX SERVICES CORP
2009	20042318	BANK OF AMERICA C/O HOME
2008	20042318	BANK OF AMERICA C/O HOME

BRITTANY LAKES SEC 7 (2003) ABST 3 & 9

BLOCK 1, LOT 6, ACRES 0.203

08/22/2011

.203

JOHNSON CHRIS LEVAR &

NAIMA ALEA

2111 BATAAN DR

LEAGUE CITY | TX | 77573-

start

ORACLE

REAL PROPERT

JOHNSON CHRIS LEVAR &

NAIMA ALEA

03/29/2012 0

2 340

AG INCLUDED

												$.00
2010	$174,780	Y		0		$1,847.85	$1,847.85	$.00	$.00	$.00	$.00	$.00
2009	$174,780	Y		0		$1,871.55	$1,871.55	$.00	$.00	$.00	$.00	$.00
2008	$174,780	Y		0		$1,787.86	$1,787.86	$.00	$.00	$.00	$.00	$.00
2007	$174,780	Y		0		$1,768.29	$1,768.29	$.00	$.00	$.00	$.00	$.00
2006	$174,780	Y		0		$1,900.92	$1,900.92	$.00	$.00	$.00	$.00	$.00
2005	$162,910	Y		0		$1,841.36	$1,841.36	$.00	$.00	$.00	$.00	$.00
2004	$149,350			0		$1,703.78	$1,703.78	$.00	$.00	$.00	$.00	$.00
2003	$32,250			0		$412.92	$412.92	$.00	$.00	$.00	$.00	$.00

start

Mark Henry

County Judge
County of Galveston

Galveston County Courthouse
722 Moody Avenue, Galveston, Texas 77550

Patricia Grady
Legal Liaison

Roxann Lewis
Executive Assistant

August 6, 2012

Chris L Johnson
2111 Bataan Dr
League City, TX 77573

Re *Request to Tax Assessor and Collector for refund/waiver of penalty and interest charges on Account No 1999-0001-0006-000*

Dear Chris L Johnson

Our office has received your request on the above referenced matter Your request will be brought before the Commissioners Court of Galveston If you wish to address the Commissioners on this matter, you must appear and sign in with the County Clerk prior to the start of the meeting

Your request will be placed on the Commissioners Court agenda for August 21, 2012 Court begins at 9 30 a m. at the Galveston County Courthouse located at 722 Moody, 1st floor, Galveston, Texas

Please get there early to sign in with the County Clerk so that you may address Commissioners Court Please feel free to contact our office should you have any questions

Thank you in advance for your cooperation in this matter.

Sincerely,

Mark Henry

MH/adg

409-766-2244 • 281-316-8300 Ext 2244 • Fax 409-765-2915

Cheryl E. Johnson, RTA

Assessor and Collector of Taxes
Galveston County
Galveston County Courthouse
722 Moody Avenue, Galveston, Texas 77550
Toll Free 877-766-2284 Fax 409-766-2479 Office 409-765-3277
Cheryl E Johnson@co galveston tx us

July 12, 2012

Mark Henry, Galveston County Judge
722 Moody
Galveston, Texas 77550

RE Request for Waiver of penalty & interest
Account 4615-0015-0001-000
LC Partners, LP

Dear Judge Henry

Texas Property Tax Code Section 1 08, **Timeliness of Action by Mail**, states "when a property owner is required by this title to make a payment or to file or deliver a report, application, statement, or other documentation or paper before a specified date, his action is timely if

1 It is sent by regular first-class mail, properly addressed with postage prepaid, and
2 It bears a post office cancellation mark of a date earlier than the specified date and within the specified period of the property owner furnishes satisfactory proof that it was deposited in the mail before the specified date and within the specified period "

The customer states she dropped off her payment at the Post Office on January 31, 2012 The evidence of a delivery confirmation receipt and the envelope supports a postmark date of February 1, 2012

Account Numbers	Year	Waiver
4615-0015-0001-000	2011	$ 633 02

Sincerely,

Cheryl E. Johnson

Cheryl E Johnson

To: Galveston County Tax Office

From: LC Partners, LP

Date: March 22nd, 2012

Re: 4615-0015-0001-000

We are appealing the $ 487.27 late fee assessed on this account.

Attached is a copy of the track and confirm delivery confirmation receipt, showing the item being sorted at the post office at 4:30am on February 1st – before the post office opens. The only way they could be processing the payment at that hour, was if we had delivered it on Jan 31st. The post office stayed open until midnight, and this check was delivered on Jan 31st at 6:30pm to the downtown Franklin Street post office.

Please research this account, and let me know the outcome.

Thank you.

H. Graham

Helen Graham

RECEIVED
MAR 22 2012
COLLECTIONS

English Customer Service USPS Mobile Register / Sign In

USPS.COM

Search USPS.com or Track Packages

Quick Tools Ship a Package Send Mail Manage Your Mail Shop Business Solutions

Track & Confirm

You entered: [illegible]

Status: Delivered

Your item was delivered at 6:30 am on February 01, 2012 in HOUSTON, TX 77219. Additional information for this item is stored in files offline.

You may request that the additional information be retrieved from the archives, and that we send you an e-mail when this retrieval is complete. Requests to retrieve additional information are generally processed within four hours. This information will remain online for 30 days.

I would like to receive notification on this request

Restore

Find Another Item

What's your label (or receipt) number?

Find

U.S. Postal Service™ Delivery Confirmation™ Receipt

Postage and Delivery Confirmation fees must be paid before mailing.

Article Sent To: (to be completed by mailer)

Postmark Here

DELIVERY CONFIRMATION NUMBER: 0310 0460 0000 1470 3160

PS Form 152, May [illegible]

POSTAL CUSTOMER:
Keep this receipt. For inquiries:
Access internet web site at
www.usps.com®
or call 1-800-222-1811

CHECK ONE (POSTAL USE ONLY)

- [ ] Priority Mail™ Service
- [ ] First-Class Mail® parcel
- [ ] Package Services parcel

(See Reverse)

LEGAL
Privacy Policy ›
Terms of Use ›
FOIA ›
No FEAR Act EEO Data ›

ON USPS.COM
Government Services ›
Buy Stamps & Shop ›
Print a Label with Postage ›
Customer Services ›
Site Index ›

ON ABOUT.USPS.COM
About USPS Home ›
Newsroom ›
Mail Service Updates ›
Forms & Publications ›
Careers ›

OTHER USPS SITES
Business Customer Gateway ›
Postal Inspectors ›
Inspector General ›
Postal Explorer ›

Copyright© 2012 USPS. All Rights Reserved.

ORACLE

L020212M628

L020111M151	01/31/2011	47981176	000000000105	CH	$13,584.85	$6,905.01	PA	461500150001000	LC PARTNERS LP
705020610P	02/01/2010	15894527	1036	CH	$13,751.28	$6,989.80	PA	461500150001000	LC PARTNERS LP
TA090406	10/14/2008	12129804		CH	$0.00	$0.00	TA	461500150001000	20217746-STEWART TI
ACTFIXINT	02/02/2009	13742900		CH	$0.00	$378.91-	TR	461500150001000	LC PARTNERS LP
ACTFIXINT	02/02/2009	13742900		CH	$0.00	$378.91	TR	461500150001000	LC PARTNERS LP
679021109P	02/02/2009	13742900	1007	CH	$5,792.05	$5,792.05	PA	461500150001000	LC PARTNERS LP
L020309M151	01/31/2009	13815851	000000000100	CH	$4,983.95	$4,983.95		461500150001000	LC PARTNERS LP
S300107097	10/14/2008	12129804	42-3373	CH	$0.00	$4,983.95-	TR	461500150001000	20217746-STEWART TI
336101408ESC	10/14/2008	12129804	42-3373	CH	$0.00	$0.00	TR	461500150001000	20217746-STEWART TI
S300829087	08/27/2008	12129804	42-3373	CH	$0.00	$0.00	TR	461500150001000	20217746-STEWART TI
835082708P	08/27/2008	12129804	42-3373	CH	$4,983.95	$4,983.95	PA	461500150001000	20217746-STEWART TI
LC20080131	01/31/2008	4853	1079	CH	$9,843.21	$9,843.21	PA	461500150001000	CENTERPOINTE PROPER
						$148,204.11			

start

Mark Henry

County Judge
County of Galveston

Galveston County Courthouse
722 Moody Avenue, Galveston, Texas 77550

Patricia Grady
Legal Liaison

Roxann Lewis
Executive Assistant

August 6, 2012

Helen Graham
LC Partners, LP
4808 Gibson St
Houston, TX 77007

Re *Request to Tax Assessor and Collector for refund/waiver of penalty and interest charges on Account No 4615-0015-0001-000*

Dear Helen Graham/LC Partners. LP

Our office has received your request on the above referenced matter Your request will be brought before the Commissioners Court of Galveston. If you wish to address the Commissioners on this matter, you must appear and sign in with the County Clerk prior to the start of the meeting

Your request will be placed on the Commissioners Court agenda for August 21, 2012 Court begins at 9:30 a m at the Galveston County Courthouse located at 722 Moody, 1st floor, Galveston, Texas

Please get there early to sign in with the County Clerk so that you may address Commissioners Court. Please feel free to contact our office should you have any questions

Thank you in advance for your cooperation in this matter

Sincerely,

Mark Henry

MH/adg

409-766-2244 • 281-316-8300 Ext 2244 • Fax 409-765-2915

Cheryl E. Johnson, RTA

Assessor and Collector of Taxes
Galveston County
Galveston County Courthouse
722 Moody Avenue, Galveston, Texas 77550
Toll Free 877-766-2284 Fax 409-766-2479 Office 409-765-3277
Cheryl E Johnson@co galveston tx us

July 12, 2012

Mark Henry, Galveston County Judge
722 Moody
Galveston, Texas 77550

RE: Request for refund or waiver of penalty & interest
5191-0000-0001-000
James H. Yates

Dear Judge Henry

According ding to the Texas Property Tax Code Section 31 01 (g) " . failure to send or receive the tax bill required by this section does not affect the validity of the tax, penalty, or interest, the due date, the existence of a tax lien, or any procedure instituted to collect a tax "

The homeowner states he never received a bill for the 2011 taxes. Our records indicate the bill was sent to the homeowner at the address listed on the certified roll. He has since paid taxes including penalty and interest on 3-27-12

Account	Year	Refund
5191-0000-0001-000	2011	$ 408.67

Sincerely,

Cheryl E. Johnson

Cheryl E. Johnson

D'63

Mrs. Erma

From the Desk of Jim Yates.....

3-14-12

to whom it may concern

I never rec'd a tax statement on this account - Pls refund to me P&I accrued. - I had to call the tax office to get a copy of my tax bill.

Thanks

Tel· 281-337-2888 Fax: 281-337-5721

JY

CHERYL E. JOHNSON, RTA
Galveston County Tax Assessor Collector
722 Moody, Galveston, Texas 77550
(Toll Free) 877-766-2284 or 409-766-2481

2011 Consolidated Tax Statement

Property Location. 1622 OLEANDER DR 77539
Acreage 1 9800
Legal Description
ABST 11 A FARMER LOT 1 C H MOORE S/D W 1/2

ACCOUNT # 519100000001000 CAD # R154238

D0597570204280 02 02

YATES JAMES H & CAROL F
1622 OLEANDER DR
DICKINSON TX 77539-6727

Appraised Land Value	$36,670
Improvements/Personal Property Value	+189,740
Total Market Value	$226,410
Homestead Cap Adjustment.	
MTG/Agent.	
Sales Tax Savings	
Assessment Ratio 100%	

Entity	Market Value -	Exemptions =	Taxable Value ÷ 100 x	Tax Rate =	Total Taxes
GALVESTON CO	$226,410	$105,282	$121,128	61294500	$708 72
ROAD & FLOOD	$226,410	$105,282	$121,128	00885500	$10 73
DICKINSON ISD	$226,410	$25,000	$201,410	1 5400000	$2,047 57
CITY DICKINSON	$226,410	$10,000	$216,410	40861000	$781 91
DRAIN DIST #1	$226,410	$20,000	$206,410	11500000	$237 37
MAINLAND COLL	$226,410	$69,282	$157,128	23202000	$330 87
WCID NO 1	$226,410	$25,000	$201,410	21037700	$423 72
TOTAL 2011 TAXES					**$4,540.89**

Current Exemptions According to Appraisal District HOMESTEAD, OVER 65

Should you have questions regarding the exemptions or wish to update address or ownership information, contact the Galveston Central Appraisal District at 1-866-277-4725 or the Harris County Appraisal District at 713-957-7800 *(depending on the county where the property is located)*

New Payment Option Available!

PROPERTY TAX PAYMENT OPTIONS*

PAYMENT IN FULL Must be USPS postmarked by January 31, 2012, unless you qualify for a payment option below

SPLIT PAYMENT Allows current year taxes to be paid in 2 equal installments without penalty and interest if proper amounts are paid by deadlines. Most governments offer this payment option Those not participating are shown below

INSTALLMENT PAYMENTS FOR QUALIFIED OVER-65, DISABLED PERSON & PROPERTY OWNERS DAMAGED BY GOVERNOR DECLARED DISASTER (drought) A person who is disabled or over 65 years of age may be eligible to make four equal installment payments on their homesteaded property *(If you already qualify, amounts will be listed in the box below)* and may also defer or delay payment. Owners of property damaged by the drought may also be eligible to make installment payments provided proper amounts are paid by due dates shown Payment coupons for split payments and O65 and DP payment plans will be mailed by March 1 2012

***Please contact your mortgage company before participating in partial payment options!**

Split Payment Option *(1/2 by November 30, 2011)*

Entity	Amount Due
GALVESTON CO	$708 72
ROAD & FLOOD	$10 73
DRAIN DIST #1	$237 37
MAINLAND COLL	$330 87
WCID NO 1	$423 72
1ST payment by 11/30/11 of*	$855.71
2ND payment by 7/2/12 of*	$855 70

O-65, Disabled & Disaster Payment Option *(1/4 by January 31, 2012)*

Payment Due Date	Amount Due
January 31 2012	$1,135 22
April 2, 2012	$1,135 22
May 31, 2012	$1,135 22
July 31, 2012	$1,135 23

Non-Split Pay Taxes Due *(by January 31, 2012)*

DICKINSON ISD	$2,047 57
CITY DICKINSON	$781 91
Total Due January 31, 2012*	$2,829.48

Total Taxes Due by Month

Month	2011 Taxes	Prior Year Taxes	Total
If paid in October	$4,540 89	$ 00	$4,540 89
If paid in November	$4,540 89	$ 00	$4,540 89
If paid in December	$4,540 89	$ 00	$4,540 89
If paid in January	$4,540 89	$ 00	$4,540 89
If paid in February	$4,858 75	$ 00	$4,858 75

*Our records indicate delinquent taxes are due for the following tax years

Please send this coupon with check, money order or cashier's check payable to GCTO in the enclosed envelope
Correspondence, ownership or other changes should be mailed separately to· Property Tax Dept , 722 Moody, Galveston, TX 77550

ACCOUNT # 5191-0000-0001-000
CAD # R154238

YATES JAMES H & CAROL F
1622 OLEANDER DR
DICKINSON TX 77539-6727

Credit card checks NOT accepted A $25 fee will be charged for all returned checks. **Select a payment option below·**

- [ ] First half split payment by 11/30/11
- [ ] O65/DP/Disaster ¼ payment by 1/31/12
- [ ] Full payment by 1/31/12
- [ ] Please mail postcard receipt

000000R154238 0000454089 0000454089 0000454089 0000454089 7

Appraisal & Collection Technologies - GALVESTON COUNTY

ORACLE

Notes

519100000001000 | REAL PROPERT

YATES JAMES H & CAROL F

1622 OLEANDER DR

04/04/2012 | 0

2 | 211 | 336 | 401 | 605 | 901

AG INCLUDED

												$.00
2010	$226,410	Y	Y	0		$4,547.73	[redacted]	$.00	$.00	$.00	$.00	$.00
2009	$226,410	Y	Y	0		$4,580.21	$4,580.21	$.00	$.00	$.00	$.00	$.00
2008	$226,410	Y	Y	0		$4,531.76	$4,531.76	$.00	$.00	$.00	$.00	$.00
2007	$226,410	Y	Y	0		$4,542.26	$4,542.26	$.00	$.00	$.00	$.00	$.00
2006	$226,410	Y	Y	0		$5,031.14	$5,031.14	$.00	$.00	$.00	$.00	$.00
2005	$216,500	Y	Y	0		$5,015.29	$5,015.29	$.00	$.00	$.00	$.00	$.00
2004	$198,640			0		$4,893.55	$4,893.55	$.00	$.00	$.00	$.00	$.00
2003	$1[illegible]			0		$4,876.90	$4,876.90	$.00	$.00	$.00	$.00	$.00

03/27/2012

YATES JAMES H & CAROL F

Start

Mark Henry

County Judge
County of Galveston

Galveston County Courthouse
722 Moody Avenue, Galveston, Texas 77550

Patricia Grady
Legal Liaison

Roxann Lewis
Executive Assistant

August 6, 2012

James H Yates
1622 Oleander Dr
Dickinson, TX 77539

Re *Request to Tax Assessor and Collector for refund/waiver of penalty and interest charges on Account No 5191-0000-0001-000*

Dear James H Yates

Our office has received your request on the above referenced matter Your request will be brought before the Commissioners Court of Galveston If you wish to address the Commissioners on this matter, you must appear and sign in with the County Clerk prior to the start of the meeting

Your request will be placed on the Commissioners Court agenda for August 21, 2012 Court begins at 9 30 a m at the Galveston County Courthouse located at 722 Moody, 1st floor, Galveston, Texas.

Please get there early to sign in with the County Clerk so that you may address Commissioners Court Please feel free to contact our office should you have any questions.

Thank you in advance for your cooperation in this matter.

Sincerely,

Mark Henry

MH/adg

409-766-2244 • 281-316-8300 Ext 2244 • Fax 409-765-2915

Cheryl E. Johnson, RTA

Assessor and Collector of Taxes
Galveston County
Galveston County Courthouse
722 Moody Avenue, Galveston, Texas 77550
Toll Free 877-766-2284 Fax 409-766-2479 Office 409-765-3277
Cheryl E Johnson@co galveston tx us

July 12, 2012

Mark Henry,
Galveston County Judge
722 Moody
Galveston, Texas 77550

RE Request for Refund of Penalty & Interest
4502-0003-0008-000
Tommy Thompson

Dear Judge Henry:

Mr Thompson is requesting a refund of the penalty and interest collected on the account number referenced above Mr Thompson states he paid off his mortgage in September 2011 but he did not receive a tax statement. The statement was mailed to the Mortgage Company listed on the account

According to the Texas Property Tax Code Section 31 01 (g) " failure to send or receive the tax bill required by this section does not affect the validity of the tax, penalty, or interest, the due date, the existence of a tax lien, or any procedure instituted to collect a tax "

Account #	Years	Refund
4502-0003-0008-000	2011	$343.11

Sincerely,

Cheryl E. Johnson

Cheryl E. Johnson

RECEIVED
JUN 06 2012
COLLECTIONS

June 5, 2012

Tommy Thompson
208 Falcon Lake Circle
Friendswood, Texas 77546
281 610 4922 Cell
281 993 5588 home

Galveston County Tax Office
722 Moody
Galveston, Texas 77550
Judge Henry

RE: Account Number 450200030008000, Sec 1 (3003) ABST 151, BLOCK 3, LOT 8, and ACRES 0.336

Judge Henry:

We paid our home off on the last day of September 2011; we did not receive any tax information from Galveston County until June 1, 2012. We did receive notice from Friendswood ISD and we paid that on 12/30/2011.

On June 1, 2012 we received a letter from Galveston County saying that we owe $2,630.52. Since we did not receive the notice because we paid off our home in September 2011.

We would like to pay the Current Tax Levy of $2, 287.41.

Thank you for your assistance in this matter.

Tommy Thompson

Mary Jo Thompson

Tommy and Mary Jo Thompson
Home Owner's

Appraisal & Collection Technologies - GALVESTON COUNTY

ORACLE

Prev Acc | Next Acc | Prev Owner | Next Owner | Acct History | Acct Summary | Notes | Documents

EVANS_E
ACT6008 v1.221

07/11/2012 13:37 31
GCTO_PROD

SUMMARY

Account Information

Account No [redacted]
Owner No 0 Owner Percentage 1 00
Parcel Address 208 FALCON LAKE CIR
Roll Code REAL PROPERTY

Legal Description

Legal Description: LAKES OF FALCON RIDGE SEC 1 (2003) ABST 151, BLOCK 3, LOT 8, ACRES 0 336

List of Mortgage Companies

Year	Fido	Fiduciary Name
2011	90059307	CITIMORTGAGE INC
2010	90059307	CITIMORTGAGE INC
2009	20059307	CITIMORTGAGE INC
2008	20059307	CITIMORTGAGE INC

Legal Information

Year	Legal Status	Cause No	Bankruptcy No

Total Due

Total Due $.00

Payment Agmt. No.

Other Information

Certified Date 08/22/2011

Legal Acres .336

Owner Information

Certified Owner: THOMPSON TOMMY & MARY M
Address: 208 FALCON LAKE CIR
FRIENDSWOOD TX 77546-

Alternate Owner
Address

Start | SnagIt/32 | Oracle Appl | Appraisal & ... | Inbox - Micr | Adobe Acrobat | Microsoft Ex. | 1 39 PM

13:39·08PM 11-Jul-2012

Mark Henry

County Judge
County of Galveston

Galveston County Courthouse
722 Moody Avenue, Galveston, Texas 77550

Patricia Grady
Legal Liaison

Roxann Lewis
Executive Assistant

August 6, 2012

Tommy Thompson
208 Falcon Lake Circle
Friendswood, TX 77546

Re *Request to Tax Assessor and Collector for refund/waiver of penalty and interest charges on Account No 4502-0003-0008-000*

Dear Tommy Thompson

Our office has received your request on the above referenced matter Your request will be brought before the Commissioners Court of Galveston If you wish to address the Commissioners on this matter, you must appear and sign in with the County Clerk prior to the start of the meeting

Your request will be placed on the Commissioners Court agenda for August 21, 2012 Court begins at 9 30 a m at the Galveston County Courthouse located at 722 Moody, 1st floor, Galveston, Texas

Please get there early to sign in with the County Clerk so that you may address Commissioners Court. Please feel free to contact our office should you have any questions

Thank you in advance for your cooperation in this matter

Sincerely,

Mark Henry

MH/adg

409-766-2244 • 281-316-8300 Ext 2244 • Fax 409-765-2915

Mark Henry

County Judge
County of Galveston

Galveston County Courthouse
722 Moody Avenue, Galveston, Texas 77550

Patricia Grady
Legal Liaison

Roxann Lewis
Executive Assistant

March 20, 2012

FILE COPY

The Honorable Cheryl E Johnson
Tax Assessor-Collector
Galveston County Courthouse
722 Moody
Galveston, Texas 77550

Re. Request for refund

Dear Ms Johnson

Enclosed is a request for a refund of penalty and interest charges from
Roger W Peters
3803 Alcorn Bend Dr
Sugar Land, Texas 77479

Account No. 1647 0005 0036 000, 1647 0005 0037 000

Please review this request and return to the Commissioners' Court. Thank you very much for your assistance

Sincerely,

Mark Henry

Enclosure

MH/rcl

409-766-2244 • 281-316-8300 Ext 2244 • Fax 409-765-2915

RECEIVED
MAR 16 2012
GALVESTON COUNTY JUDGE

March 10, 2012

Judge Mark Henry,

I purchased a home in Galveston and closed the purchase on August 31, 2011. The property is in Beachtown and sits on two lots according to the Beachtown plat. The property has two Galveston County tax numbers:

1647-0005-0036-000 One lot - $219,680 assessed tax value
Home improvement - $971,250 assessed tax value

I paid this tax bill of $30,688.71 with a check dated December 11, 2011 This was well before the due date.

1647-0005-0037-000 One lot - $219,680 assessed tax value

I either did not receive this bill or I disregarded as I thought the other account covered the entire tax bill I am not familiar with the Beachtown setup of separating a property into two lots. I received a postcard informing me that I had not paid the tax bill for this account I looked it up online and I paid the bill immediately. I sent a check for $5660.86 on March 4, 2012.

However, since this is technically late there is now a late fee of several hundred dollars. I ask that you waive this fee given that this was an honest mistake on my part. I paid the other account (over $30k) well in advance and I would have done the same with this account had I realized the lots were treated separately.

I ask for you consideration and understanding.

Respectfully,

Roger W. Peters

Cheryl E. Johnson, RTA

Assessor and Collector of Taxes
Galveston County
Galveston County Courthouse
722 Moody Avenue, Galveston, Texas 77550
Toll Free 877-766-2284 Fax 409-766-2479 Office 409-765-3277
Cheryl E Johnson@co galveston tx us

June 26, 2012

Mark Henry
Galveston County Judge
722 Moody
Galveston, Texas 77550

RE. Request for refund of penalty & interest
1647-0005-0037-000
Roger W. Peters

Dear Judge Henry

Mr Peters is requesting a refund of the penalty and interest assessed on the account number referenced above Mr. Peters states he did not receive a tax bill for 2011 because he thought the property was listed under one account number According to the property tax records, a 2011 tax statement was sent to the address on record after the name change

According to the Texas Property Tax Code Section 31 01 (g) " failure to send or receive the tax bill required by this section does not affect the validity of the tax, penalty, or interest, the due date, the existence of a tax lien, or any procedure instituted to collect a tax "

Account #	Year	Refund
1647-0005-0037-000	2011	$ 537.53

Sincerely,

Cheryl E. Johnson

Cheryl E Johnson

RECEIVED
MAR 16 2012
GALVESTON COUNTY JUDGE

March 10, 2012

Judge Mark Henry,

I purchased a home in Galveston and closed the purchase on August 31, 2011. The property is in Beachtown and sits on two lots according to the Beachtown plat. The property has two Galveston County tax numbers:

1647-0005-0036-000 One lot - $219,680 assessed tax value
Home improvement - $971,250 assessed tax value

I paid this tax bill of $30,688.71 with a check dated December 11, 2011. This was well before the due date.

*1647-0005-0037-000 One lot - $219,680 assessed tax value

I either did not receive this bill or I disregarded as I thought the other account covered the entire tax bill. I am not familiar with the Beachtown setup of separating a property into two lots. I received a postcard informing me that I had not paid the tax bill for this account. I looked it up online and I paid the bill immediately. I sent a check for $5660.86 on March 4, 2012.

However, since this is technically late there is now a late fee of several hundred dollars. I ask that you waive this fee given that this was an honest mistake on my part. I paid the other account (over $30k) well in advance and I would have done the same with this account had I realized the lots were treated separately.

I ask for you consideration and understanding.

Respectfully,

Roger W. Peters

Appraisal & Collection Technologies - GALVESTON COUNTY

Action Edit Query Record Field Help Entitlements Accounts Statements Window

ORACLE

Go To:

EVANS_E
ACT6006 v1 219

06/27/2012 12:15:10
GCTO_PROD

STATUS DETAIL Expand Fees Summary

Account Information

Account No Roll Code

Certified Owner

Address Line

Amount Due as of Owner No

Tax Units Tax Unit Description

List of Tax Units

Remove Fees Countywide

Tax Unit,Yr, Rec. Type

Tax Unit

Year

Rec Type

Multi Select

Amount Due/Paid Information

Year	Appr Value	H O V D		Base Levy	Paid Levy	Write-Off	Remaining Levy	Fees	Refund	Amount Due
2011	$219,660	0		$5,660.86	$5,660.86	$.00	$.00	$537.53	$.00	

EVANS_E
ACTNOTES v1.8

06/27/2012 12:16:11
GCTO_PROD

Account Number 164706860837000

Seq No	Entry Date	Operator ID	Note	Msg	Expire Date
25225849	11/04/2011	LEMONS_E	OCT 2011 NAO - STMT BATCH 2011 STMT PETERS ROGER & BERNADETTE	CSTM	
25224311	11/04/2011				
25222358	11/04/2011				
18730820	10/19/2010			V STMT	
14791457	11/09/2009			VI STMT	
14731571	11/02/2009			V CSTM	
14729247	11/02/2009				
14724267	11/02/2009				

OCT 2011 NAO - STMT BATCH 2011 STMT PETERS ROGER & BERNADETTE,
3603 ALCORN BEND DR, SUGAR LAND, TX 77479-2543, AMT DUE $5,660.86

Save

Close Window

Print Window Close Window

SnagIt/32 Oracle Appl Appraisal & ... Microsof. Microsoft E Roger Pete 12 16 PM

12:16:52PM 27-Jun-2012

View Note

OCT 2011 NAO - STMT BATCH 2011 STMT· PETERS ROGER & BERNADETTE, 3803 ALCORN BEND DR, SUGAR LAND, TX 77479-2543, AMT DUE $5,660 86

Print Window

Close Window

Mark Henry

County Judge
County of Galveston

Galveston County Courthouse
722 Moody Avenue, Galveston, Texas 77550

Patricia Grady
Legal Liaison

Roxann Lewis
Executive Assistant

August 6, 2012

Roger W Peters
3808 Alcorn Bend Dr
Sugarland, TX 77479

Re *Request to Tax Assessor and Collector for refund/waiver of penalty and interest charges on Account No 1647-0005-0037-000*

Dear Roger Peters

Our office has received your request on the above referenced matter Your request will be brought before the Commissioners Court of Galveston If you wish to address the Commissioners on this matter, you must appear and sign in with the County Clerk prior to the start of the meeting

Your request will be placed on the Commissioners Court agenda for August 21, 2012. Court begins at 9.30 a m at the Galveston County Courthouse located at 722 Moody, 1st floor, Galveston, Texas

Please get there early to sign in with the County Clerk so that you may address Commissioners Court Please feel free to contact our office should you have any questions

Thank you in advance for your cooperation in this matter.

Sincerely,

Mark Henry

MH/adg

409-766-2244 • 281-316-8300 Ext 2244 • Fax 409-765-2915

Mark Henry

County Judge
County of Galveston

Galveston County Courthouse
722 Moody Avenue, Galveston, Texas 77550

Patricia Grady
Legal Liaison

Roxann Lewis
Executive Assistant

FILE COPY

May 1, 2012

The Honorable Cheryl E Johnson
Tax Assessor-Collector
Galveston County Courthouse
722 Moody
Galveston, Texas 77550

Re Request for refund

Dear Ms Johnson

Enclosed is a request for a refund of penalty and interest charges from
Edward Bajorek
2510 Reba Drive
Houston, Texas 77019

Account No. 7146-0000-0022-001 & 7146-0000-0021-000

Please review this request and return to the Commissioners' Court Thank you very much for your assistance

Sincerely,

Mark Henry

Enclosure

MH/rcl

Denied

409-766-2244 • 281-316-8300 Ext 2244 • Fax 409-765-2915

April 30, 2012
2510 Reba Drive
Houston, Texas 77019

The Honorable Mark Henry, County Judge
722 Moody, Suite 200
Galveston, Texas 77550

Re: Accounts number 7146-0000-0022-001 and number 21-000

Dear Sir:

On January 31, 2012 I mailed the tax payment for the above accounts. According to Gordon Robinson the people at the lock box did not take note of the postmark of January 31, 2012. The check cleared my bank on February 2, 2012 which would indicate that it was received and deposited on February 1, 2012.

Enclosed please find copies of the tax statements and the bank statement showing the check deposit. I was not late in mailing the payments. I did not forget to mail the payments nor was I out of town. The payments were mailed according to state law.

Please correct the tax statements to the correct tax amount. I appreciate your attention to this matter and will be happy to personally come and discuss this matter with you.

Sincerely,

E C Bajorek

Edward Bajorek

3 enclosures

2011 CORRECTED TAX STATEMENT

CHERYL E. JOHNSON, RTA
TAX ASSESSOR-COLLECTOR
722 Moody
Galveston, TX 77550

Certified Owner
BAJOREK EDWARD & MARY ANN MCCULLEY
2510 REBA DR
HOUSTON, TX 77019

Legal Description
ABST 7 S C BUNDICK SUR LOT 22-R (22-1)
TIKI ISLAND SEC 11 2ND REPLAT

Legal Acres 1183
Parcel Address ISLES FND RD
Print Date 04/09/2012

Account No: 7146-0000-0022-001 **Appr Dist No R522920**
As of Date 04/09/2012

Market Value Land	Market Value Improvement	Appraised Value	Assessed Value	Capped Value	Homesite Value	Agricultural Market Value	Non-Qualifying Value
$213,770	$0	$213,770	$213,770	$0	$0	$0	$213 770

Taxing Unit	Assessed Value (100%)	Exemptions Code	Exemptions Amount	Taxable Value	Tax Rate	Tax
GALVESTON CO	$213,770		$0 00	$213,770	0 6129450	$1,310 29
ROAD & FLOOD	$213,770		$0 00	$213,770	0 0088550	$18 93
HITCHCOCK ISD	$213,770		$0 00	$213,770	1 5400000	$3,292 06
VILL OF TIKI	$213,770		$0 00	$213,770	0 2381740	$509 14
MAINLAND COLL	$213,770		$0 00	$213,770	0 2320200	$495 99
GCFWSD #6	$213,770		$0 00	$213,770	0 2287420	$488 98

Total Tax $6,115 39
Total Tax Paid to date $5,715 30
Total Tax Remaining $400 09

Exemptions:

AMOUNT DUE IF PAID BY THE END OF

APR 2012 0%	MAY 2012 0%	JUN 2012 7%	JUL 2012 14 + up to 20%	AUG 2012 15 + up to 20%	SEP 2012 16 + up to 20%
$400 09	$400 09	$428 10	$533 22	$537 92	$542 59

MAR 2012 NAO

School Information
HITCHCOCK ISD **2011 M&O 1 0400000 I&S 50000000 Total 1 5400000 2010 M&O 1 0400000 I&S 46000000 Total 1 5000000**

PLEASE CUT AT THE DOTTED LINE AND RETURN THIS PORTION WITH YOUR PAYMENT 4 1 41

Print Date: 04/09/2012

PLEASE NOTE YOUR ACCOUNT NUMBER ON YOUR CHECK AND MAKE CHECKS PAYABLE TO

Galveston County Tax Office
722 Moody
Galveston, Texas 77550
409-766-2481, 1-877-766-2284

7146000000022001

7146-0000-0022-001
BAJOREK EDWARD & MARY ANN MCCULLEY
2510 REBA DR
HOUSTON, TX 77019

AMOUNT PAID

$_____

000000R522920 0000040009 0000040009 0000042810 000005332d 1

2011 CORRECTED TAX STATEMENT

CHERYL E. JOHNSON, RTA
TAX ASSESSOR-COLLECTOR
722 Moody
Galveston, TX 77550

Certified Owner
BAJOREK EDWARD & MARY ANN MCCULLEY
2510 REBA DR
HOUSTON, TX 77019

Legal Description
ABST 7 S C BUNDICK SUR LOT 21-R (21-0)
TIKI ISLAND SEC 11 2ND REPLAT

Legal Acres: 0930
Parcel Address 127 ISLES END RD
Print Date 04/09/2012

Account No: 7146-0000-0021-000 **Appr. Dist. No.. R144308**
As of Date: 04/09/2012

Market Value		Appraised Value	Assessed Value	Capped Value	Homesite Value	Agricultural Market Value	Non-Qualifying Value
Land	Improvement						
$168 080	$123,500	$291,580	$291,580	$0	$290,080	$0	$1,500

Taxing Unit	Assessed Value (100%)	Exemptions Code	Exemptions Amount	Taxable Value	Tax Rate	Tax
GALVESTON CO	$291,580		$0 00	$291,580	0 6129450	$1,787 23
ROAD & FLOOD	$291,580		$0 00	$291,580	0 0088550	$25 82
HITCHCOCK ISD	$291,580		$0 00	$291,580	1 5400000	$4,490 33
VILL OF TIKI	$291,580		$0 00	$291,580	0 2381740	$694 47
MAINLAND COLL	$291,580		$0 00	$291,580	0 2320200	$676 52
GCFWSD #6	$291,580		$0 00	$291,580	0 2287420	$666 97

Total Tax $8,341 34
Total Tax Paid to date $7,795 66
Total Tax Remaining. $545 68

Exemptions

AMOUNT DUE IF PAID BY THE END OF

APR 2012 0%	MAY 2012 0%	JUN 2012 7%	JUL 2012 14 + up to 20%	AUG 2012 15 + up to 20%	SEP 2012 16 + up to 20%
$545 68	$545 68	$583 87	$727 28	$733 63	$740 02

MAR 2012 NAO

School Information
HITCHCOCK ISD 2011 M&O 1 0400000 I&S 50000000 Total 1 5400000 2010 M&O 1 0400000 I&S 46000000 Total 1 5000000

PLEASE CUT AT THE DOTTED LINE AND RETURN THIS PORTION WITH YOUR PAYMENT 4141

Print Date 04/09/2012

PLEASE NOTE YOUR ACCOUNT NUMBER ON YOUR CHECK AND MAKE CHECKS PAYABLE TO

Galveston County Tax Office
722 Moody
Galveston, Texas 77550
409-766-2481, 1-877-766-2284

7146000000021000

7146-0000-0021-000
BAJOREK EDWARD & MARY ANN MCCULLEY
2510 REBA DR
HOUSTON, TX 77019

AMOUNT PAID
$_____

000000R144308 0000054568 0000054568 0000058387 0000072728 8

Statement Period
02/01/12 through 02/29/12
E0 P PE 0E 52
Enclosures 0
Account Number 0057 7465 3018

K & N BUILDER SALES, INC

Deposits and Credits

Date Posted	Amount ($)	Description	Bank Reference
02/01	52,500 00	Deposit	813009430274693
02/13	6,000 00	Deposit	813009330114739
02/21	7,961 04	Deposit	813009130499011
02/28	899 00	Deposit	813009130190099

Withdrawals and Debits
Checks

Check Number	Amount ($)	Date Posted	Bank Reference	Check Number	Amount ($)	Date Posted	Bank Reference
1367	16,603 94	02/07	813000892145099	1369	6,115 39	02/02	813009992195372
1368	8,341 34	02/02	813009992195373				

Total Overdraft Fees and NSF: Returned Item Fees

	Total for This Period	Total Year-to-Date
Total Overdraft Fees	$0 00	$0.00
Total NSF Returned Item Fees	$0 00	$35 00

Daily Ledger Balances

Date	Balance ($)	Date	Balance ($)	Date	Balance ($)
02/01	56,626 43	02/07	25,565.76	02/21	39,526 80
02/02	42,169 70	02/13	31,565.76	02/28	40,425 80

HH

Check Image

Account Number: 0057 7465 3018

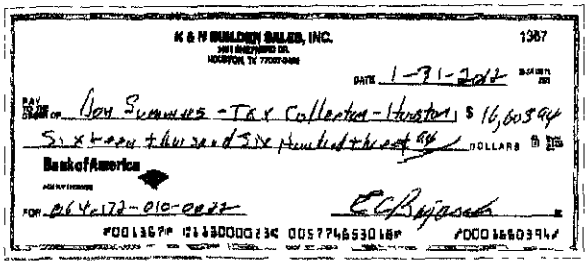

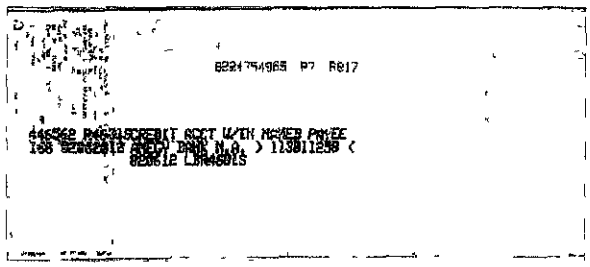

Ref No 813000892145099 Amount 16,603.94

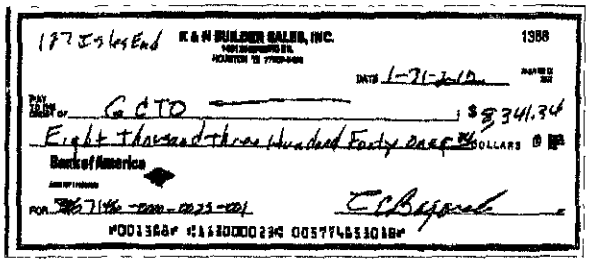

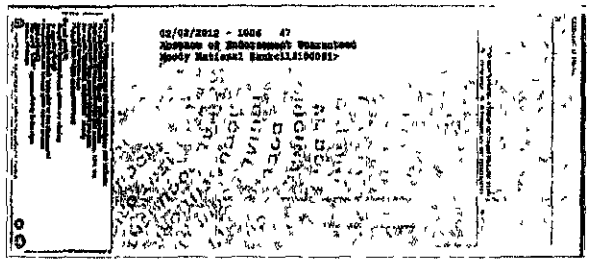

Ref No 813009992195373 Amount 8,341 34

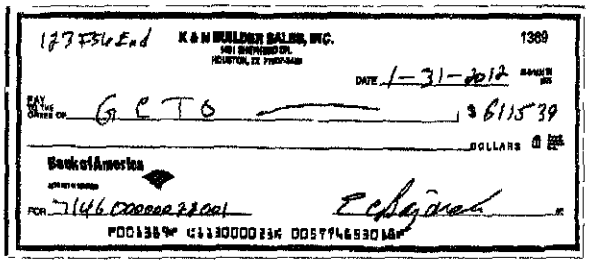

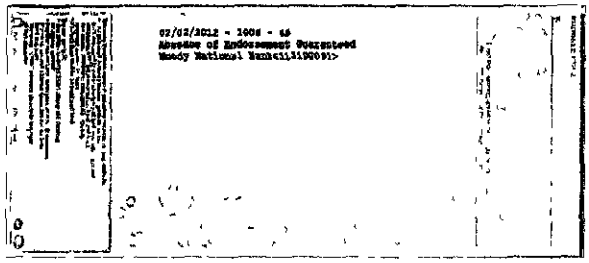

Ref No 813009992195372 Amount 6,115 39

Cheryl E. Johnson, RTA

Assessor and Collector of Taxes
Galveston County
Galveston County Courthouse
722 Moody Avenue, Galveston, Texas 77550
Toll Free 877-766-2284 Fax 409-766-2479 Office 409-765-3277
Cheryl E Johnson@co galveston tx us

May 10, 2012

Mark Henry, Galveston County Judge
722 Moody
Galveston, Texas 77550

RE. Request for refund of penalty & interest
7146-0000-0022-001 & 7146-0000-0021-000
Edward Bajorek

Dear Judge Henry

Texas Property Tax Code Section 1 08, **Timeliness of Action by Mail**, states "when a property owner is required by this title to make a payment or to file or deliver a report, application, statement, or other documentation or paper before a specified date, his action is timely if.

1 It is sent by regular first-class mail, properly addressed with postage prepaid; and
2 It bears a post office cancellation mark of a date earlier than the specified date and within the specified period of the property owner furnishes satisfactory proof that it was deposited in the mail before the specified date and within the specified period."

Mr Bajorek's mailing envelope shows a United States Postal Service postmark date of 2-1-2012
The deadline that is required to post tax payments for 2011 was Tuesday, January 31, 2012

Account Numbers	Year	Refund
7146-0000-0022-001	2011	$ 400.09
7146-0000-0021-000	2011	$ 545.68

Sincerely,

Cheryl E Johnson

Cheryl E Johnson

April 30, 2012
2510 Reba Drive
Houston, Texas 77019

The Honorable Mark Henry, County Judge
722 Moody, Suite 200
Galveston, Texas 77550

Re: Accounts number 7146-0000-0022-001 and number 21-000

Dear Sir:

On January 31, 2012 I mailed the tax payment for the above accounts. According to Gordon Robinson the people at the lock box did not take note of the postmark of January 31, 2012. The check cleared my bank on February 2, 2012 which would indicate that it was received and deposited on February 1, 2012.

Enclosed please find copies of the tax statements and the bank statement showing the check deposit. I was not late in mailing the payments. I did not forget to mail the payments nor was I out of town. The payments were mailed according to state law.

Please correct the tax statements to the correct tax amount. I appreciate your attention to this matter and will be happy to personally come and discuss this matter with you.

Sincerely,

Edward Bajorek

3 enclosures

Statement Period
02/01/12 through 02/29/12
E0 P PE 0E 52
Enclosures 0
Account Number 0057 7465 3018

K & N BUILDER SALES, INC.

Deposits and Credits

Date Posted	Amount ($)	Description	Bank Reference
02/01	52,500.00	Deposit	813009430274693
02/13	6,000.00	Deposit	813009330114739
02/21	7,961.04	Deposit	813009130499011
02/28	899.00	Deposit	813009130190099

Withdrawals and Debits
Checks

Check Number	Amount ($)	Date Posted	Bank Reference	Check Number	Amount ($)	Date Posted	Bank Reference
1367	16,603.94	02/07	813000892145099	1369	6,115.39	02/02	813009992195372
1368	8,341.34	02/02	813009992195373				

Total Overdraft Fees and NSF: Returned Item Fees

	Total for This Period	Total Year-to-Date
Total Overdraft Fees	$0.00	$0.00
Total NSF: Returned Item Fees	$0.00	$35.00

Daily Ledger Balances

Date	Balance ($)	Date	Balance ($)	Date	Balance ($)
02/01	56,626.43	02/07	25,565.76	02/21	39,526.80
02/02	42,169.70	02/13	31,565.76	02/28	40,425.80

Account Number: 0057 7485 3018

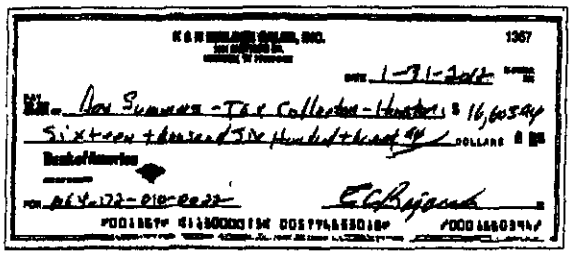

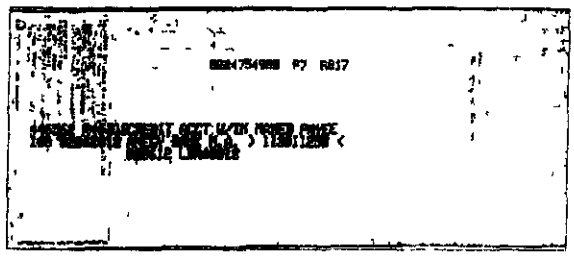

Ref. No.. 813000892145099 Amount: 16,603.94

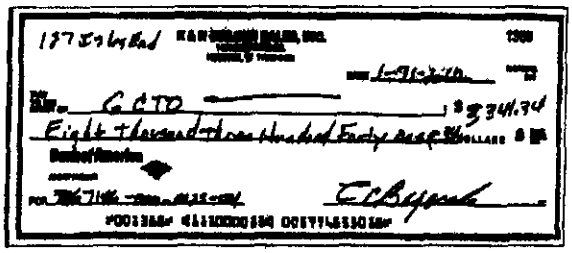

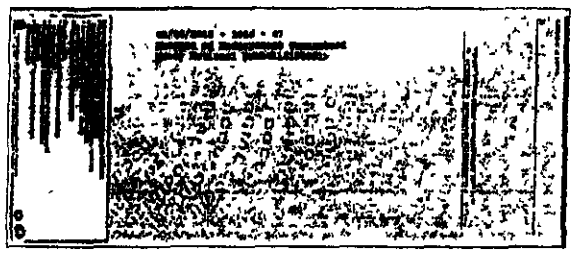

Ref. No : 813009992195373 Amount: 8,341.34

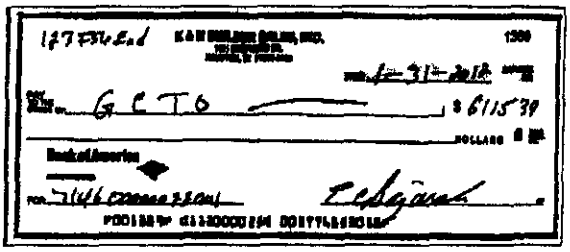

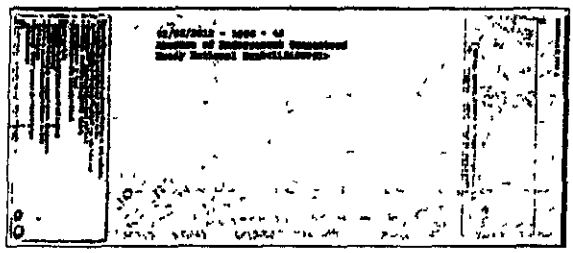

Ref. No.. 813009992195372 Amount. 6,115.39

END OF CHECK IMAGE

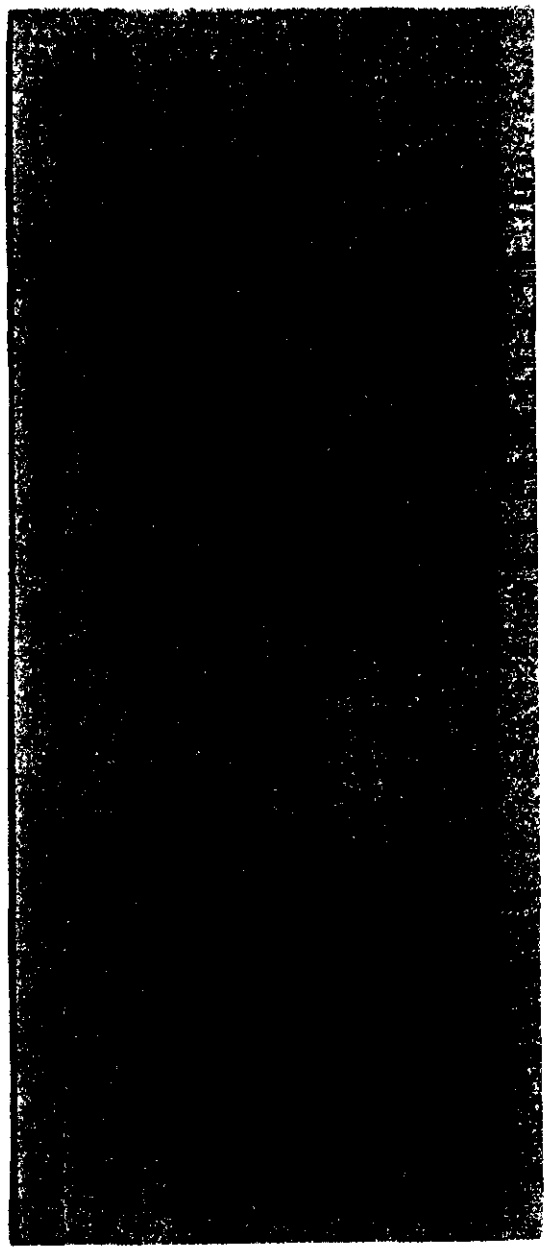

http://192.168.7.18/gcto/show.jsp?f=120202\1006-44-F.tif - Windows Internet Explorer

http://192.168.7.18/gcto/show.jsp?f=120202\1006-44-F.tif

http://192.168.7.18/gcto/show.jsp?f=120202\1006-

Page Tools

ORACLE

[Retrieve Image By Name]

Image: 120202/1006-44-F.tif.png

(1473 of 2508)

< previous next >

Please send this coupon with check, money order or cashier's check payable to GCTO in the enclosed envelope.
Correspondence, ownership or other changes should be mailed separately to: Property Tax Dept. 722 Moody, Galveston, TX 77550.

ACCOUNT #: 7146-0000-0022-001
CAD #: R522920

DAJOREK EDWARD & MARY ANN MCCULLEY
2510 REBA DR
HOUSTON TX 77019

Credit card checks NOT accepted. A $25 fee will be charged for all returned checks. Select a payment option below.

- [ ] First half split payment by 11/30/11
- [ ] Oct/DD/Disaster is payment by 1/31/12
- [ ] Full payment by 1/31/12
- [x] Please mail postcard receipt

0000008522920 0000611539 0000611539 0000611539 0000611539 1

Done Internet 100%

start

need Envelope
Lockbox

http://192.168.7.18/gcto/show.jsp?f=120202\1006-44-F.tif - Windows Internet Explorer

http://192.168.7.18/gcto/show.jsp?f=120202\1006-44-F.tif

http://192.168.7.18/gcto/show.jsp?f=120202\1006-

[Retrieve Image By Name]

Image: 120202/1006-46-F.tif.png

(1477 of 2508)

previous next

Please send this coupon with check, money order or cashier's check payable to GCTO in the enclosed envelope.
Correspondence, ownership or other changes should be mailed separately to: Property Tax Dept., 722 Moody, Galveston, TX 77550

ACCOUNT #: 7146-0000-0021-000
CAD #: R144308

BAXDREK EDWARD & MARY ANN MCCULLEY
2516 REBA DR
HOUSTON TX 77019

Credit card checks NOT accepted. A $23 fee will be charged for all returned checks. Select a payment option below:

- [ ] First half split payment by 11/30/11
- [ ] O63/DP/Disaster if payment by 1/31/12
- [ ] Full payment by 1/31/12
- [x] Please send postcard receipt

000000R144308 0000834134 0000834134 0000834134 0000834134 1

javascript nextImage();

Internet 100%

start

Mark Henry

County Judge
County of Galveston

Galveston County Courthouse
722 Moody Avenue, Galveston, Texas 77550

Patricia Grady
Legal Liaison

Roxann Lewis
Executive Assistant

August 6, 2012

Edward Bajorek
25103 Reba Dr
Houston, TX 77019

Re *Request to Tax Assessor and Collector for refund/waiver of penalty and interest charges on Account No 7146-0000-0022-001 & 7146-0000-0021-000*

Dear Edward Bajorek

Our office has received your request on the above referenced matter Your request will be brought before the Commissioners Court of Galveston If you wish to address the Commissioners on this matter, you must appear and sign in with the County Clerk prior to the start of the meeting

Your request will be placed on the Commissioners Court agenda for August 21, 2012 Court begins at 9 30 a m at the Galveston County Courthouse located at 722 Moody, 1st floor, Galveston, Texas

Please get there early to sign in with the County Clerk so that you may address Commissioners Court Please feel free to contact our office should you have any questions

Thank you in advance for your cooperation in this matter

Sincerely,

Mark Henry

MH/adg

409-766-2244 • 281-316-8300 Ext 2244 • Fax 409-765-2915

Cheryl E. Johnson, RTA

Assessor and Collector of Taxes
Galveston County
Galveston County Courthouse
722 Moody Avenue, Galveston, Texas 77550
Toll Free 877-766-2284 Fax 409-766-2479 Office 409-765-3277
Cheryl E Johnson@co galveston tx us

July 12, 2012

Mark Henry
Galveston County Judge
722 Moody
Galveston, Texas 77550

RE Request for waiver/refund of penalty & interest
Robert Meek
1406-0010-0302-000

Dear Judge Henry.

Mr Meek is requesting a refund of the penalties and interest on the above referenced account The homeowner claims he submitted an on line payment via the internet a week before the taxes were due. However, due to the payment being sent to an invalid mailing address, it was returned to Wells Fargo and credited back to his account

According to the Texas Property Tax Code Section 1 08 Timeliness of Action by Mail When a property owner is required by this title to make a payment or to file or deliver a report, application, statement, or other document or paper by a specified due date, his actions are timely if·

(1) it is sent by regular first-class mail, properly addressed with postage prepaid; and
(2) it bears a post office cancellation mark of a date earlier than or on the specified due date and within the specified period or the property owner furnishes satisfactory proof that it was deposited in the mail on or before the specified due date and within the specified period.

Account No	Year	Refund
1406-0010-0302-000	2011	$ 194.03

Sincerely,

Cheryl E. Johnson

Cheryl E Johnson

281-794-4180

Sperry Van Ness.
Commercial Real Estate Advisors

www.svn.com

February 16, 2012

Cheryl E. Johnson, RTA
Galveston County Tax Assessor Collector
722 Moody
Galveston, Texas 77550

Ref Account #1406-0010-0302-000 R512198

Dear Ms Johnson.

I have enclosed copies of my bank statement to question why my cashiers check sent from Wells Fargo Online checking was returned. I used a mailing address I've used in previous payments to send my check for the taxes on our condominium at 26570 Baywater Drive, #302, Galveston, Texas 77554

I am sending this information to protest any late fee or penalty for not paying our taxes by January 31, 2012 Our electronic payment was sent a week before the taxes were due. Your office returned our check and consequently we were charged a late fee.

Would you please review these documents and offer an explanation as to why our check for $2,720.73 was returned.

Warm regards,

Robert A Meek, II
14310 Sugar Mill Circle
Houston, Texas 77095

Sperry Van Ness is a registered trademark of Sperry Van Ness International Corporation
Some locations independently owned and operated

Exhibit 1

Wells Fargo Business Online

Payee Details

Help

Quick Links
Set up automatic payments
View payment history

Payee Information for Galveston Tax

Delete Payee

Cheryl E Johnson, RTA
P O Box 4902
Galveston, TX 77550
409-766-2481

S/N Galveston

Payees Help
To change your Payee name or address, you must delete the current payee and add a new payee with the new information

Display on Bill Pay Overview Currently Displayed | Do Not Display

Learn more about
Display
Nickname
Payment Account

Account Information

Edit

Account Number 140600100302000
Payee Status Active
Name on Account ROBERT MEEK II
Payee Nickname Galveston Tax

Payment Details

Edit

Default Payment Account XXXXXX3288 CHECKING
Payment Option Manual
Category Miscellaneous
Memo NA

Set up automatic payments

Notifications

Edit

Payment Notifications

On Email me when a payment has been made
Off Email me when a payment made by paper check has been cashed
Off Remind me when a payment is due

Make Payment

Go to Bill Pay Overview

Equal Housing Lender
© 2001- Wells Fargo All rights reserved

Wells Fargo Business Online

Notice Detail

Help

Next Notice >

Date **02/14/2012**

Subject **Bill Payment Returned**

Payee (Payee Nickname): Cheryl E Johnson, RTA (Galveston Tax)
Payee Account 140600100302000
Payment Amount $2,720 73
Wells Fargo Account: XXXXXX3288
Payment Send On Date 01/24/2012

If you did not place a stop payment request on this item, there are several possible reasons for the credit

- Is your payee account name and number correct?
- Is the mailing address entered for this payee correct?
- Was the payment made over 90 days ago? (Checks not cashed within 90 days are automatically credited back to your account)
- Has your account with the payee been closed or does it have a credit balance?

Before scheduling additional payments to this payee you may want to match the information entered on your payee list with your most recent statement from this payee and make any necessary corrections Or contact your payee for the specific reason for this returned payment

Please select "Contact Us" from the top of any Bill Pay screen to send us an email if you have any questions or need further assistance Or, you may call one of our Bill Pay Specialists anytime at 1-800-956-4442

Sincerely,
Wells Fargo
Bill Pay Customer Service

Delete Notice

Equal Housing Lender

© 2001-2012 Wells Fargo All rights reserved

Exhibit 3

Wells Fargo Business Online

Account Activity

Business and Personal Accounts

CHECKING XXXXXX3288

Activity Summary

Ending Balance as of 02/13/12	$2 502 49
Available Balance	**$2,455 05**
Interest earned this period	$0 09
Interest paid year to-date	$0 31

Transactions

Show **All Transactions** for **Last 90 Days**

Date	Description	Deposits / Credits	Withdrawals / Debits
Pending Transactions Note Amounts may change			
02/14/12	BILL PAY Spencer Road P U		$47 41
Posted Transactions			
02/13/12	SAVE AS YOU GO TRANSFER DEBIT TO XXXXXXXXXXX9346		$1 00
02/13/12	CHECK		$325 00
02/13/12	BILL PAY USAA ON-LINE xxxxxxxxxxx21083 ON 02-13		$1 934 24
02/13/12	ATM WITHDRAWAL - COPPERFIELD HOUSTON TX 2500 0003487		$100 00
02/10/12	SAVE AS YOU GO TRANSFER DEBIT TO XXXXXXXXXXX9346		$1 00
02/10/12	US BANK HOME MTG MTG PYMT 021012 6850147528 NTE*SPH*ACCT 6850147528 EFFECTIVE 02/		$745 05
02/09/12	SAVE AS YOU GO TRANSFER DEBIT TO XXXXXXXXXXX9346		$2 00
02/09/12	BILL PAY Macy s ON-LINE xxxxxx20077 ON 02 09		$129 87
02/09/12	BILL PAY COMCAST CABLE CO ON-LINE xxxxxxxxxxx15760 ON 02-09		$8 60
02/07/12	RECURRING TRANSFER REF #OPEC3LNWN5 TO BUSINESS CHECKING MKTG AND INSURANCE		$500 00
02/06/12	WT FED#09743 WESTERN FEDERAL CR /FTR/BNF=Mark Meek SRF# 0006726037355657 TRN#120206038005 RFB#		$300 00
02/06/12	ATM WITHDRAWAL - COPPERFIELD HOUSTON TX 2500 0001764		$100 00
02/06/12	WIRE TRANS SVC CHARGE - SEQUENCE 120206038005 SRF# 0006726037355657 TRN#120206038005 RFB#		$30 00
02/03/12	CHECK # 3268		$440 00
02/02/12	SAVE AS YOU GO TRANSFER DEBIT TO XXXXXXXXXXX9346		$1 00
02/02/12	BILL PAY COMCAST CABLE CO ON-LINE xxxxxxxxxxx15760 ON 02-02		$35 41
02/01/12	RECURRING TRANSFER REF #OPEC3K3KNS TO WAY 'SAVE SAVINGS XXXXXX3874		$25 00
02/01/12	US TREASURY 310 XXVA BENEF 020112 ROBERT A MEEK	$389 00	
02/01/12	RECURRING TRANSFER REF #OPEQNQZ7NB FROM SAVINGS XXXXXX3820	$5 000 00	
01/31/12	INTEREST PAYMENT	$0 31	
01/31/12	SAVE AS YOU GO TRANSFER DEBIT TO XXXXXXXXXXX9346		$2 00
01/31/12	CHECK # 3269		$5 800 00
01/31/12	BILL PAY BANK OF AMERICA ON-LINE xxxxxxxxxxx95404 ON 01 31		$750 00
01/31/12	BILL PAY USAA ON-LINE xxxxxxxxx xxxx45177 ON 01 31		$162 58
01/30/12	ATM WITHDRAWAL - COPPERFIELD HOUSTON TX 2500 0009722		$100 00
01/25/12	SAVE AS YOU GO TRANSFER DEBIT TO XXXXXXXXXXX9346		$3 00
01/25/12	BILL PAY Galveston Tax ON-LINE xxxxxxxxx02000 ON 01-25 Received		$2 720 73
01/25/12	BILL PAY CenterPoint Ener ON-LINE xxx23216 ON 01-25		$78 98
01/25/12	BILL PAY Department of Ve ON LINE xxxxxxxxxxxxxxx8MEEK ON 01 25		$40 00
01/24/12	SAVE AS YOU GO TRANSFER DEBIT TO XXXXXXXXXXX9346		$2 00
Totals		**$44,635 35**	**$44 557 40**

you informed of our progress

Due to an invalid mailing address, this payment was returned to us by the United States Postal Service The payment amount was credited back to your funding account on 02/15/2012

Please contact your payee to verify the correct payment address and if necessary create a new payee Please refer to the online Help link within your online Bill Pay session for complete instructions on adding/deleting payees You may wish to reschedule

Appraisal & Collection Technologies - GALVESTON COUNTY

ORACLE

H032712M151

15103052012T	02/24/2012	20626770	000113590919	CH	$0.00	$2,720.73	TR	140600100302000	MEEK ROBERT A II
H012711M151	01/27/2011	17829101	000000000322	CH	$1,830.10	$1,830.10	PA	140600100302000	MEEK ROBERT A II
151022410CH2	02/23/2010	16010259	CC000282273	CR	$1,959.57	$1,959.57	PA	140600100302000	20868981-ROBERT MEE
RD762506	11/09/2009	14247106	74215	CH	$87.10-	$87.10-	RD	140600100302000	MEEK ROBERT A II
151082609T	07/30/2009	14247106	3154	CH	$0.00	$76.40-	LG	140600100302000	MEEK ROBERT A II
151082609T	07/30/2009	14247106	3154	CH	$0.00	$76.40	TR	140600100302000	MEEK ROBERT A II
151082609T	07/30/2009	14247106	3154	CH	$0.00	$163.50-	TR	140600100302000	MEEK ROBERT A II
151082609T	07/30/2009	14247106	3154	CH	$0.00	$163.50	LG	140600100302000	MEEK ROBERT A II
879073009P	07/30/2009	14247106	3154	CH	$1,331.27	$1,331.27	PA	140600100302000	MEEK ROBERT A II
RD708685	07/21/2009	14013439	63943	CH	$4,273.36-	$4,273.36-	RD	140600100302000	1728101-AURORA LOA
879083009P	06/30/2009	14183393	098	CH	$186.40	$186.40	PA	140600100302000	MEEK ROBERT A II
RC090615	04/17/2009	14013439	799574	CH	$4,273.36-	$4,273.36-	TR	140600100302000	20543169-AURORA LO
						$14,800.22			

start

16.23
178.00
194.03 p18

Mark Henry

County Judge
County of Galveston

Galveston County Courthouse
722 Moody Avenue, Galveston, Texas 77550

Patricia Grady
Legal Liaison

Roxann Lewis
Executive Assistant

August 6, 2012

Robert Meek
14310 Sugar Mill Circle
Houston, TX 77095

Re *Request to Tax Assessor and Collector for refund/waiver of penalty and interest charges on Account No 1406-0010-0302-000*

Dear Robert Meek

Our office has received your request on the above referenced matter Your request will be brought before the Commissioners Court of Galveston If you wish to address the Commissioners on this matter. you must appear and sign in with the County Clerk prior to the start of the meeting

Your request will be placed on the Commissioners Court agenda for August 21, 2012 Court begins at 9 30 a m at the Galveston County Courthouse located at 722 Moody, 1st floor, Galveston, Texas

Please get there early to sign in with the County Clerk so that you may address Commissioners Court Please feel free to contact our office should you have any questions

Thank you in advance for your cooperation in this matter

Sincerely,

Mark Henry

MH/adg

409-766-2244 • 281-316-8300 Ext 2244 • Fax 409-765-2915

Cheryl E. Johnson, RTA

Assessor and Collector of Taxes
Galveston County
Galveston County Courthouse
722 Moody Avenue, Galveston, Texas 77550
Toll Free 877-766-2284 Fax 409-766-2479 Office 409-765-3277
Cheryl E Johnson@co galveston tx us

June 25, 2012

Mark Henry
Galveston County Judge
722 Moody
Galveston, Texas 77550

RE Request for waiver/refund of penalty & interest
Liaw Mean-Liang
7702-0008-0004-000

Dear Judge Henry

According to the Texas Property Tax Code Section 1.08 Timeliness of Action by Mail When a property owner is required by this title to make a payment or to file or deliver a report, application, statement, or other document or paper by a specified due date, his actions are timely if

(1) It is sent by regular first-class mail, properly addressed with postage prepaid, and
(2) It bears a post office cancellation mark of a date earlier than or on the specified due date and within the specified period or the property owner furnishes satisfactory proof that it was deposited in the mail on or before the specified due date and within the specified period

The homeowner states he mailed the payment in January, however the check was returned to him by the post office on February 28, 2012 due to an incorrect address

Account No	Year	Refund
7702-0008-0004-000	2011	$ 239 95

Sincerely,

Cheryl E. Johnson

Cheryl E Johnson

Mark Henry

County Judge
County of Galveston

Galveston County Courthouse
722 Moody Avenue, Galveston, Texas 77550

Patricia Grady
Legal Liaison

Roxann Lewis
Executive Assistant

FILE COPY

March 20, 2012

The Honorable Cheryl E Johnson
Tax Assessor-Collector
Galveston County Courthouse
722 Moody
Galveston, Texas 77550

Re Request for refund

Dear Ms. Johnson:

Enclosed is a request for a refund of penalty and interest charges from:
Liaw Mean-Liang & Yong-Fang Kuo
2874 Love Lane
Friendswood, Texas 77546

Account No. 7702 0008 0004 000

Please review this request and return to the Commissioners' Court Thank you very much for your assistance

Sincerely,

Mark Henry

Enclosure

MH/rcl

Denied

409-766-2244 • 281-316-8300 Ext 2244 • Fax 409-765-2915

Mean-Liang Liaw
2874 Love Lane
Friendswood, TX 77546
March 7, 2012

RECEIVED
MAR 13 2012
GALVESTON COUNTY JUDGE

Judge Mark Henry
Galveston County Commissioner Court
722 Moody, County Courthouse
Galveston, TX 77550

Dear Judge Henry

I am writing to ask your support on waving the penalty of my property tax I have talked to the employees of the county tax office, and they told me to write this letter to you

I have mailed my property tax of $2666 14 in January to the tax office For some unknown reason though, the check got returned on the 28th of this February The bank told me one of the reasons that the check was not accepted is that the address was not correct I didn't think it was wrong because I mailed another two payments to the same address and both of them went through smoothly. After I got the notice, I went to the tax office and paid the tax in full However, I got a penalty for not paying the tax on time

I definitely mailed my tax before the due date The money has been drafted from my account since the check was mailed in January. The unknown reason that the check can't go through is not my fault I sincerely ask you to consider my case and approve a waiver for the penalty

Your kind consideration is appreciated.

Thanks,

Mean-Liang Liaw

Attachment
1 Email form bank
2 Tax statement

Attachment

Pay To Amount Pay From Deliver By

GCTO
Tax, 2874 Love lane, R394607 -4-000
$2,666 14 INTEREST CHECKING-4570 01/13/2012 Mailing Date

Confirmation Number C0223-KJ4J4

The merchant was unable to accept this payment and the payment amount will be refunded to your account This can occur for several reasons, such as an incorrect Pay To account address or account number Please check your Pay To account information to ensure its accuracy You may want to make this payment by some other means if the due date is near

This payment was scheduled as part of your recurring payment plan View payment plan details Please note, if your payment date falls on a weekend or holiday, it will be processed on the previous business day

If you have a question about this payment, click Inquire About Payment to send a message to customer service

Received 2/28/12

Mailing Address

GCTO
Tax, 2874 Love lane, R394607 -4-000
Cheryl Johnson, Col, of Tax
P O Box 4802
Houston, TX 77210-4902
409-766-2481

CHERYL E. JOHNSON, RTA

Galveston County Tax Assessor Collector
722 Moody, Galveston, Texas 77550
(Toll Free) 877-766-2284 or 409-766-2481

2011 Consolidated Tax Statement

Property Location 2874 LOVE LN 77546
Acreage 2690
Legal Description
WINDSOR ESTATES SEC 2 (2000) ABST 184, BLOCK 8, LOT 4, ACRES 0 269

ACCOUNT #: 770200080004000 **CAD #.** R394607

D0597570204500 02 02

LIAW MEAN-LIANG &
YONG-FANG KUO
2874 LOVE LN
FRIENDSWOOD TX 77546

Appraised Land Value	$40,390
Improvements/Personal Property Value	+234,610
Total Market Value	$275,000
Homestead Cap Adjustment	

MTG/Agent
Sales Tax Savings $140 78
Assessment Ratio 100%

Entity	Market Value	Exemptions	Taxable Value ÷ 100 x	Tax Rate =	Total Taxes
GALVESTON CO	$275,000	$55,000	$220,000	61294500	$1,348 48
ROAD & FLOOD	$275,000	$58,000	$217,000	00885500	$19 22
FRIENDWD CITY	$275,000	$55,000	$220,000	59020000	$1,298 44
TOTAL 2011 TAXES					**$2,666.14**

Current Exemptions According to Appraisal District HOMESTEAD

Should you have questions regarding the exemptions or wish to update address or ownership information, contact the Galveston Central Appraisal District at 1-866-277-4725 or the Harris County Appraisal District at 713-957-7800 *(depending on the county where the property is located)*

New Payment Option Available!

PROPERTY TAX PAYMENT OPTIONS*

PAYMENT IN FULL Must be USPS postmarked by January 31, 2012, unless you qualify for a payment option below

SPLIT PAYMENT Allows current year taxes to be paid in 2 equal installments without penalty and interest if proper amounts are paid by deadlines Most governments offer this payment option Those not participating are shown below

INSTALLMENT PAYMENTS FOR QUALIFIED OVER-65, DISABLED PERSON & PROPERTY OWNERS DAMAGED BY GOVERNOR DECLARED DISASTER (drought) A person who is disabled or over 65 years of age may be eligible to make four equal installment payments on their homesteaded property *(if you already qualify, amounts will be listed in the box below)* and may also defer or delay payment Owners of property damaged by the drought may also be eligible to make installment payments provided proper amounts are paid by due dates shown Payment coupons for split payments and O65 and DP payment plans will be mailed by March 1, 2012

***Please contact your mortgage company before participating in partial payment options!**

Split Payment Option (1/2 by November 30, 2011)

Entity	Amount Due
GALVESTON CO	$1,348 48
ROAD & FLOOD	$19 22
FRIENDWD CITY	$1,298 44
1ST payment by 11/30/11 of:	$1,333.07
2ND payment by 7/2/12 of:	$1,333.07

Non-Split Pay Taxes Due (by January 31, 2012)

Total Due January 31, 2012:	**$.00**

O-65, Disabled & Disaster Payment Option (1/4 by January 31, 2012)

Payment Due Date	Amount Due
January 31, 2012	
April 2, 2012	
May 31, 2012	
July 31, 2012	

Total Taxes Due [illegible]

Month	2011 Taxes	Prior Year Taxes	Total
If paid in October	$2,666 14	$ 00	$2,666 14
If paid in November	$2,666 14	$ 00	$2,666 14
If paid in December	$2,666 14	$ 00	$2,666 14
If paid in January	$2,666 14	$ 00	$2,666 14
If paid in February	$2,852 77	$ 00	$2,852 77

*Our records indicate delinquent taxes are due for the following tax years

Mean-Living Liaw
2874 Love Ln
Friendswood, TX 77546-4790

NORTH HOUSTON TX 773

08 MAR 2012 PM 4 L

To: Galveston County Commissioners Court
Attn: Judge Mark Henry
722 Moody, County Courthouse
Galveston, TX 77550

77550+2348

Mark Henry

County Judge
County of Galveston

Galveston County Courthouse
722 Moody Avenue, Galveston, Texas 77550

Patricia Grady
Legal Liaison

Roxann Lewis
Executive Assistant

August 6, 2012

Liaw Mean-Liang & Yong-Fang Kuo
2874 Love Lane
Friendswood, TX 77546

Re *Request to Tax Assessor and Collector for refund/waiver of penalty and interest charges on Account No 7702-0008-0004-000*

Dear Liaw Mean-Liang & Yong-Fang Kuo.

Our office has received your request on the above referenced matter Your request will be brought before the Commissioners Court of Galveston If you wish to address the Commissioners on this matter, you must appear and sign in with the County Clerk prior to the start of the meeting

Your request will be placed on the Commissioners Court agenda for August 21, 2012 Court begins at 9 30 a m at the Galveston County Courthouse located at 722 Moody, 1st floor, Galveston, Texas

Please get there early to sign in with the County Clerk so that you may address Commissioners Court Please feel free to contact our office should you have any questions

Thank you in advance for your cooperation in this matter

Sincerely,

Mark Henry

MH/adg

409-766-2244 • 281-316-8300 Ext 2244 • Fax 409-765-2915

AGENDA ITEM #32c1

GALVESTON COUNTY, TEXAS
COMMISSIONERS COURT
Contract Approval Request

Date of Request.	8 13 12	Department:	Tax Office		
Renewal Contract·		Orgkey.		Object Code·	
Contract Start Date.	9-1-12	Vendor.	Ron Carter		
Contract End Date	8 31-15	Vendor No:	708323	Contract No·	
Description					
Contract # Issued By Purchasing·		CM12251	Requested Legal Review·	Yes _____ No _____	

Fund Name	Fund #	FY12 $ Budget	FY12 $ Request	FY13 $ Request	FY14 $ Request	FY15 $ Request	FY15 $ Request
		Ø					
Totals		-	-	-	-	-	-
Total Cost.							

Approved By·	Date	Signature
Department Head		Cheryl E. Johnson
Purchasing Agent·	8-14-12	
County Legal		

Contract listed in Budget Documentation (Yes/No)

County Budget Office.

Form Number

AGREEMENT UNDER TRANSPORTATION CODE CHAPTER 502 FOR SERVICES TO THIRD PARTIES RELATED TO THE LICENSING OF VEHICLES AND SUBLEASE OF REMOTE STICKER PRINTING SYSTEM

This Agreement is entered into pursuant to the provisions of the Texas Transportation Code Ch. 502 by and between **Ron Carter**, hereafter Referred to as "Subcontractor" and Galveston County, Texas (the "County"), a political subdivision of the State of Texas, acting through the Commissioners Court of Galveston County in conjunction with the Galveston County Tax Assessor/Collector, hereinafter collectively referred to as the "County"

Recitals

Pursuant to the provisions of the Texas Transportation Code §502 112, the Tax Assessor/Collector of the County, with the approval of the Commissioners Court, may deputize an individual to· 1) issue motor vehicle registration receipts as a limited service deputy, or 2) issue motor vehicle registration receipts and prepare or accept applications for title transfers as a full service deputy

The County has entered into an agreement with the State of Texas (the "State") to lease Remote Sticker Processing Systems (RSPS) to provide registration and/or title update connectivity and processing on the State's Registration and Title System ("RTS") As part of the RTS, the County is further authorized to have Remote Sticker Printing System ("RSPS") equipment at any location within the County under agreements with Subcontractors desiring to have such on-premises capabilities It is to

the advantage of County residents to have RSPS equipment and RTS workstations at various locations throughout the County

The Subcontractor desires to be deputized pursuant to Texas Transportation Code §502 122(a)(2) an lease RTS workstations and/or RSPS equipment from the County for the purpose of performing such duties pursuant to Transportation Code §502 144

The County's RTS program is operated and administered by the Galveston County Tax Assessor/Collector, as part of the County Tax Assessor/Collector's registration and titling duties under the Texas Transportation Code, and the duties and obligations incumbent upon the County under this agreement will be performed through that office

NOW, THEREFORE, for and in consideration of the mutual covenants, agreements and benefits to the parties herein named, it is agreed as follows

1) Contract Terms

The contract is effective for one year terms with an initial term beginning on September 1, 2012 and ending on August 31, 2013 This contract will automatically renew for two subsequent renewal terms unless terminated earlier by the parties, in all events this contract will expire on August 31, 2015

2) Scope of Services

The parties acknowledge that pursuant to Transportation Code §502 114, only full service deputies may be given the authority to use the data processing equipment and software made the subject of the agreement, thus the parties agree that the

Subcontractor shall act only as a full service deputy in accordance with the provisions of Transportation Code §502 112(a)(2) and §502 114

3) Lease of Equipment

The County will lease the Subcontractor the RTS workstations (the "Workstations") and RSPS equipment (the "Equipment") listed in Exhibit A, which is attached hereto and made a part hereof The Subcontractor represents that it is fully trained to operate the equipment in accordance with all applicable laws and regulation, but the County, through the County Tax Assessor/Collector, may provide for installation, training, maintenance, and other services at the request of the Subcontractor

The parties agree that the cost for leasing the Workstations/Equipment is set by the State, and that presently the cost is set at Six Hundred Dollars ($600) per year In the event the annual lease amount changes, the County will give Subcontractor at least ten (10) days notice of any actual or proposed change in lease costs

4) Obligations of Subcontractor

Subcontractor must accurately complete the Subcontractor Information Sheet, and attach a copy to the Agreement as Exhibit B. If during the term of this Agreement, there are any changes to information contained in the Subcontractor Information Sheet (such as by way of example, but not limitation, changes in name, location , and principal), the Subcontractor shall within ten (10) days submit to the County Tax Assessor/Collector an updated Exhibit B to accurately reflect the changed information

In the event the Subcontractor undergoes a change in ownership, the County Tax Assessor/Collector must be notified immediately so an audit can be conducted of Subcontractor's remaining supplies New owners must be approved by the County Tax Assessor/Collector and must complete and sign a new Sublease with the County Subcontractor must perform all of the services under this Agreement and may not assign this Agreement or any duty or obligation of performance hereunder

Subcontractor is responsible for the costs of all supplies, forms, user support, utilities, connections, wirings, and other matters necessary for the Workstations/Equipment The County's responsibility for equipment installed at Subcontractor's site is limited to ensuring that the equipment remains operational

Subcontractor is responsible for any maintenance or upkeep not provided by the State Subcontractor shall not modify the Workstations/Equipment Subcontractor shall be further responsible for full repair or replacement costs for the Workstations/Equipment in the event that these items under Subcontractor's control are damaged or lost All repair work must be performed by the State or the State's designee The repair cost shall be determined by the State of the State approved contractor Subcontractor's payment for repair or replacement costs for damaged or lost Workstations/Equipment shall be remitted by Subcontractor to the County Tax Assessor/Collector within seven (7) days of written request by the County Tax Assessor/Collector

Subcontractor shall in all respects be responsible for and hold the County harmless from any damage to or the destruction of Workstations/Equipment installed

or housed at Subcontractor's location, and the Subcontractor specifically agrees that Exhibit A states the replacement cost which the Subcontractor agrees to pay upon the determination by the State of Subcontractor's liability for lost or damaged equipment

5) Subcontractor bond requirements

In accordance with the provisions of Texas Transportation Code §502 112, the Subcontractor shall post a bond, made payable to Cheryl E Johnson, Tax Assessor/Collector of Galveston County in the amount of $6,000 00 for the RSPS equipment plus $1,000 00 for each of the 34 TxDMV form 31s issued to subcontractor totaling $40,000 00 conditioned upon the Subcontractor's proper accounting and remittance of all fees the Subcontractor collects under this agreement In lieu of a bond, the Subcontractor may provide an irrevocable letter of credit drawn upon a bank licensed to operate in the State of Texas

6) Subcontractor payments to the County

Subcontractor will pay a non-refundable lease fee of $600 00 immediately upon the execution of this agreement in satisfaction of the lease payment for the initial term of the agreement The check will be made payable to the County of Galveston and shall specifically note it is the lease payment required under this agreement For renewal terms, the County Tax Assessor/Collector shall invoice Subcontractor for the annual lease payment due the County

In the event the County provides the Subcontractor with services for the installation, maintenance or other associated services with the equipment, or provides training to the Subcontractor in the operation and maintenance of the equipment, or

there is any other cost associated with the leasing of this equipment to the Subcontractor, the County, in conjunction with the County Tax Assessor/Collector, will issue the Subcontractor an invoice for the cost of such services including Workstations/Equipment and ongoing costs Subcontractor shall pay for such services within ten (10) business days of receiving an invoice

7) Subcontractor reports and responsibilities

The Subcontractor must report the activities for which the equipment is utilized as set forth herein

Subcontractor will provide a detailed report of daily sales Reports must be on a flash drive, or other medium selected by the County Tax Assessor/Collector that is compatible with the RSPS system But the parties agree that as of the date of the execution of this agreement, the flash drive is the medium utilized pursuant to the requirements of the State of Texas

If Subcontractor issues a renewal sticker in error, Subcontractor shall make an immediate report to the County Tax Assessor/Collector and have the sticker returned to the County Tax Assessor/Collector for cancellation If a sticker is issued in error and not reported to the County Tax Assessor Collector, Subcontractor shall pay a fee the equivalent to the registration and/or title fee issued in error upon demand without the necessity of the County issuing an invoice

If Subcontractor becomes aware of or suspects fraud, Subcontractor shall report same to the County Tax Assessor/Collector by telephone within 24 hours and in writing within three (3) business days Subcontractor shall not allow the

Workstations/Equipment to be used for the purpose of defrauding the State or avoiding taxation

Subcontractor shall provide access to authorized representatives of the County Tax Assessor/Collector to Subcontractor's area where registration, titling, and licensing occurs Subcontractor will also assist the County Tax Assessor/Collector in audits of Subcontractor's licensing, titling, and performance of this Agreement.

Subcontractor's use of the Workstations/Equipment shall be subject to and in compliance with the terms and conditions of the agreement for the use of the Workstations/Equipment between the State of Texas and the County, and any amendments thereto

Subcontractor shall not remove the Workstations/Equipment from Subcontractor's location specified in this Agreement without the prior written consent of the County Tax Assessor/Collector

If Subcontractor accepts personal checks for payment, such act is done at Subcontractor's personal risk

All of Subcontractor's employees who process registration and titles must be deputized through the County Tax Assessor/Collector's Office and bonded prior to the issuing of any receipts, stickers, or license plates Subcontractor will notify the County Tax Assessor/Collector within 24 hours whenever a deputized employee leaves Subcontractor's employment All employees, whether new, transferred or providing back-up coverage must be deputized and bonded prior to assuming the license and title

work duties If there are any changes in ownership, Subcontractor's employees who handle license and title work must be re-deputized

8) Fees allowed to Subcontractor

Pursuant to Transportation Code §502 114, a full-service deputy appointed under shall accept any application for registration, registration renewal, or title transfer that the County Tax Assessor/Collector may accept Such fees shall be remitted to the County Tax Assessor/Collector

The Subcontractor is hereby authorized to charge and retain an additional motor vehicle registration fee not to exceed $5 00 for each motor vehicle registration issued, and will report to the County Tax Assessor/Collector only the amount of fees it collects under this provision

9) Termination

Prior to the expiration of the term, either party may terminate this Agreement with or without cause or mutual convenience upon ten (10) days written notice to the other party All equipment and software provided under this agreement will be returned to the County immediately upon the termination of this agreement Within ten (10) days after the effective date of termination, Subcontractor must submit a termination statement and report for the month in which termination occurs Upon the conduct of a final audit and satisfactory reconciliation of all amounts due the County hereunder, the County will return the bond or letter of credit provided under this agreement

10) Miscellaneous notices and disclosures

This agreement is contingent upon the receipt of the equipment specified herein from the State of Texas The parties agree the equipment and related software is the property of the State of Texas, and is only provided to the Subcontractor pursuant to this agreement In the event the State imposes additional obligations upon the County, such obligations shall immediately become binding upon the Subcontractor, and the County shall notify the Subcontractor forthwith

In the event of nonpayment or other default, Subcontractor shall cure such default within ten (10) days of the default The County Tax Assessor/Collector may enter onto Subcontractor's premises and remove the Workstations/Equipment and supplies if the default is not cured within ten (10) days In the event the Workstations/Equipment removal is because of Subcontractor's nonpayment or other default, Subcontractor forfeits any portion of annual lease fee that remains

This lease shall be governed by and construed under the laws of the State of Texas Furthermore, the venue for any action filed pertaining to the lease or the equipment subject to this lease shall be located in Galveston County, Texas

This lease and the accompanying Exhibits constitute the entire agreement between the parties and no representation made between the parties and not reduced to writing herein shall be of any force or effect. Any previous agreement entered into between the parties to effect the purposes set forth herein and herby set aside and held for naught This agreement may not be modified except by written agreement between

parties If any provision is invalid, it shall be considered deleted from this lease, and shall not invalidate the remaining provisions of this lease

This lease is not binding until executed by a proper officer of lessor, and until the receipt and acceptance by the lessor of the annual rental fee provided for under this lease

Any notice permitted or required to be given hereunder to Subcontractor or County must be given by registered or certified Unites States mail, postage prepaid, return receipt requested, or facsimile transmission addressed to

Subcontractor

Ron Carter

2601 Palmer Highway

Texas City, TX 77590

Phone 409-948-3131

Fax 409-945-7515

Any notice permitted or requested to be given hereunder to County may be given by registered or certified United States mail, postage prepaid, return receipt requested, or by facsimile transmission addressed to

Galveston County Tax Assessor/Collector

Attention Business Services

722 Moody Avenue

Galveston, Texas 77550

Facsimile 409-766-4563

In performing the services hereunder, Subcontractor must comply with all acceptable Federal, State, and local laws, regulations, rules, and ordinances now in effect or which may hereafter be promulgated that pertain to this Agreement Subcontractor shall report and pay applicable federal and local taxes

This agreement is signed and approved by the Commissioner's Court of Galveston County as required under the provisions of Transportation Code §502 122.

GALVESTON COUNTY, TEXAS

MARK HENRY
County Judge
Galveston County, Texas

Date 8/21/12

CHERYL E JOHNSON
County Tax Assessor/Collector
Galveston County, Texas

Date 8/16/12

Attest

Dwight Sullivan
County Clerk

By: Brandy Chapman Deputy
Brandy Chapman

By
Subcontractor

Exhibit A

Galveston County RSPS Equipment Inventory Listing

Date September 1, 2012

Location of Equipment 2601 Palmer Highway, Texas City, TX 77590

Remote Sticker Printing System (RSPS) include Laptop preloaded with XP operating system, Printer, hand held bar code scanner, Wireless Print Director, Wireless Access Card, and Surge Protector

RSPS Equipment items

Equipment	Unit Value	Serial Number
Laptop	$1,500 00	KM0343A
Printer	$1,000 00	CNDJB402787
Hand held bar code scanner	$ 100 00	N/A
Surge Protector	$ 15 00	N/A
Wireless Print Director	$ 100 00	SF5004B08407
Wireless Access Card	$ 100 00	BDH40E169038

TxDMV Form 31 Documents	34

Exhibit B

Galveston County RSPS Equipment Lessee Information

Subcontractor Information Sheet

Date· September 1, 2012

Business Name HAMON BAY AREA INC, DBA RON CARTER CJD TEXAS CITY

Business Address 2601 PALMER HWY
TEXAS CITY, TX 77590

Mailing Address. SAME

Telephone Number 409-948-3131

Facsimile Number 409-572-2472

Principal Contact PATTI PIKE

Contact Person GAIL McKNIGHT

Contact Telephone 409-948-3131

Equipment Location SAME

AGENDA ITEM #32c2

GALVESTON COUNTY, TEXAS
COMMISSIONERS COURT
Contract Approval Request

Date of Request	8 13 12	Department	Tax Office		
Renewal Contract		Orgkey·		Object Code:	
Contract Start Date	9-1-12	Vendor·	Cook Ford		
Contract End Date:	8 31-15	Vendor No.	714743	Contract No:	
Description.					
Contract # Issued By Purchasing		0012248	Requested Legal Review·	Yes _____ No _____	

Fund Name	Fund #	FY12 $ Budget	FY12 $ Request	FY13 $ Request	FY14 $ Request	FY15 $ Request	FY15 $ Request
		Ø					
Totals.		-	-	-	-	-	-
Total Cost							

Approved By	Date	Signature
Department Head·		Cheryl E. Johnson
Purchasing Agent·	8-14-12	
County Legal:		

Contract listed in Budget Documentation (Yes/No)

County Budget Office.

Form Number

AGREEMENT UNDER TRANSPORTATION CODE CHAPTER 502 FOR SERVICES TO THIRD PARTIES RELATED TO THE LICENSING OF VEHICLES AND SUBLEASE OF REMOTE STICKER PRINTING SYSTEM

This Agreement is entered into pursuant to the provisions of the Texas Transportation Code Ch 502 by and between **Cook Ford**, hereafter Referred to as "Subcontractor" and Galveston County, Texas (the "County"), a political subdivision of the State of Texas, acting through the Commissioners Court of Galveston County in conjunction with the Galveston County Tax Assessor/Collector, hereinafter collectively referred to as the "County"

Recitals

Pursuant to the provisions of the Texas Transportation Code §502 112, the Tax Assessor/Collector of the County, with the approval of the Commissioners Court, may deputize an individual to 1) issue motor vehicle registration receipts as a limited service deputy, or 2) issue motor vehicle registration receipts and prepare or accept applications for title transfers as a full service deputy

The County has entered into an agreement with the State of Texas (the "State") to lease Remote Sticker Processing Systems (RSPS) to provide registration and/or title update connectivity and processing on the State's Registration and Title System ("RTS") As part of the RTS, the County is further authorized to have Remote Sticker Printing System ("RSPS") equipment at any location within the County under agreements with Subcontractors desiring to have such on-premises capabilities It is to

the advantage of County residents to have RSPS equipment and RTS workstations at various locations throughout the County

The Subcontractor desires to be deputized pursuant to Texas Transportation Code §502 122(a)(2) an lease RTS workstations and/or RSPS equipment from the County for the purpose of performing such duties pursuant to Transportation Code §502 144

The County's RTS program is operated and administered by the Galveston County Tax Assessor/Collector, as part of the County Tax Assessor/Collector's registration and titling duties under the Texas Transportation Code, and the duties and obligations incumbent upon the County under this agreement will be performed through that office

NOW, THEREFORE, for and in consideration of the mutual covenants, agreements and benefits to the parties herein named, it is agreed as follows

1) Contract Terms

The contract is effective for one year terms with an initial term beginning on September 1, 2012 and ending on August 31, 2013 This contract will automatically renew for two subsequent renewal terms unless terminated earlier by the parties, in all events this contract will expire on August 31, 2015

2) Scope of Services

The parties acknowledge that pursuant to Transportation Code §502.114, only full service deputies may be given the authority to use the data processing equipment and software made the subject of the agreement, thus the parties agree that the

Subcontractor shall act only as a full service deputy in accordance with the provisions of Transportation Code §502 112(a)(2) and §502 114

3) Lease of Equipment

The County will lease the Subcontractor the RTS workstations (the "Workstations") and RSPS equipment (the "Equipment") listed in Exhibit A, which is attached hereto and made a part hereof The Subcontractor represents that it is fully trained to operate the equipment in accordance with all applicable laws and regulation, but the County, through the County Tax Assessor/Collector, may provide for installation, training, maintenance, and other services at the request of the Subcontractor

The parties agree that the cost for leasing the Workstations/Equipment is set by the State, and that presently the cost is set at Six Hundred Dollars ($600) per year In the event the annual lease amount changes, the County will give Subcontractor at least ten (10) days notice of any actual or proposed change in lease costs

4) Obligations of Subcontractor

Subcontractor must accurately complete the Subcontractor Information Sheet, and attach a copy to the Agreement as Exhibit B If during the term of this Agreement, there are any changes to information contained in the Subcontractor Information Sheet (such as by way of example, but not limitation, changes in name, location , and principal), the Subcontractor shall within ten (10) days submit to the County Tax Assessor/Collector an updated Exhibit B to accurately reflect the changed information

In the event the Subcontractor undergoes a change in ownership, the County Tax Assessor/Collector must be notified immediately so an audit can be conducted of Subcontractor's remaining supplies New owners must be approved by the County Tax Assessor/Collector and must complete and sign a new Sublease with the County Subcontractor must perform all of the services under this Agreement and may not assign this Agreement or any duty or obligation of performance hereunder

Subcontractor is responsible for the costs of all supplies, forms, user support, utilities, connections, wirings, and other matters necessary for the Workstations/Equipment The County's responsibility for equipment installed at Subcontractor's site is limited to ensuring that the equipment remains operational

Subcontractor is responsible for any maintenance or upkeep not provided by the State Subcontractor shall not modify the Workstations/Equipment Subcontractor shall be further responsible for full repair or replacement costs for the Workstations/Equipment in the event that these items under Subcontractor's control are damaged or lost All repair work must be performed by the State or the State's designee The repair cost shall be determined by the State of the State approved contractor Subcontractor's payment for repair or replacement costs for damaged or lost Workstations/Equipment shall be remitted by Subcontractor to the County Tax Assessor/Collector within seven (7) days of written request by the County Tax Assessor/Collector

Subcontractor shall in all respects be responsible for and hold the County harmless from any damage to or the destruction of Workstations/Equipment installed

or housed at Subcontractor's location, and the Subcontractor specifically agrees that Exhibit A states the replacement cost which the Subcontractor agrees to pay upon the determination by the State of Subcontractor's liability for lost or damaged equipment

5) Subcontractor bond requirements

In accordance with the provisions of Texas Transportation Code §502 112, the Subcontractor shall post a bond, made payable to Cheryl E Johnson, Tax Assessor/Collector of Galveston County in the amount of $6,000 00 for the RSPS equipment plus $1,000 00 for each of the 37 TxDMV form 31s issued to subcontractor totaling $43,000 00 conditioned upon the Subcontractor's proper accounting and remittance of all fees the Subcontractor collects under this agreement In lieu of a bond, the Subcontractor may provide an irrevocable letter of credit drawn upon a bank licensed to operate in the State of Texas

6) Subcontractor payments to the County

Subcontractor will pay a non-refundable lease fee of $600 00 immediately upon the execution of this agreement in satisfaction of the lease payment for the initial term of the agreement. The check will be made payable to the County of Galveston and shall specifically note it is the lease payment required under this agreement For renewal terms, the County Tax Assessor/Collector shall invoice Subcontractor for the annual lease payment due the County

In the event the County provides the Subcontractor with services for the installation, maintenance or other associated services with the equipment, or provides training to the Subcontractor in the operation and maintenance of the equipment, or

there is any other cost associated with the leasing of this equipment to the Subcontractor, the County, in conjunction with the County Tax Assessor/Collector, will issue the Subcontractor an invoice for the cost of such services including Workstations/Equipment and ongoing costs Subcontractor shall pay for such services within ten (10) business days of receiving an invoice

7) Subcontractor reports and responsibilities

The Subcontractor must report the activities for which the equipment is utilized as set forth herein

Subcontractor will provide a detailed report of daily sales Reports must be on a flash drive, or other medium selected by the County Tax Assessor/Collector that is compatible with the RSPS system But the parties agree that as of the date of the execution of this agreement, the flash drive is the medium utilized pursuant to the requirements of the State of Texas

If Subcontractor issues a renewal sticker in error, Subcontractor shall make an immediate report to the County Tax Assessor/Collector and have the sticker returned to the County Tax Assessor/Collector for cancellation If a sticker is issued in error and not reported to the County Tax Assessor Collector, Subcontractor shall pay a fee the equivalent to the registration and/or title fee issued in error upon demand without the necessity of the County issuing an invoice.

If Subcontractor becomes aware of or suspects fraud, Subcontractor shall report same to the County Tax Assessor/Collector by telephone within 24 hours and in writing within three (3) business days Subcontractor shall not allow the

Workstations/Equipment to be used for the purpose of defrauding the State or avoiding taxation

Subcontractor shall provide access to authorized representatives of the County Tax Assessor/Collector to Subcontractor's area where registration, titling, and licensing occurs Subcontractor will also assist the County Tax Assessor/Collector in audits of Subcontractor's licensing, titling, and performance of this Agreement

Subcontractor's use of the Workstations/Equipment shall be subject to and in compliance with the terms and conditions of the agreement for the use of the Workstations/Equipment between the State of Texas and the County, and any amendments thereto

Subcontractor shall not remove the Workstations/Equipment from Subcontractor's location specified in this Agreement without the prior written consent of the County Tax Assessor/Collector

If Subcontractor accepts personal checks for payment, such act is done at Subcontractor's personal risk

All of Subcontractor's employees who process registration and titles must be deputized through the County Tax Assessor/Collector's Office and bonded prior to the issuing of any receipts, stickers, or license plates Subcontractor will notify the County Tax Assessor/Collector within 24 hours whenever a deputized employee leaves Subcontractor's employment All employees, whether new, transferred or providing back-up coverage must be deputized and bonded prior to assuming the license and title

work duties If there are any changes in ownership, Subcontractor's employees who handle license and title work must be re-deputized

8) Fees allowed to Subcontractor

Pursuant to Transportation Code §502 114, a full-service deputy appointed under shall accept any application for registration, registration renewal, or title transfer that the County Tax Assessor/Collector may accept Such fees shall be remitted to the County Tax Assessor/Collector

The Subcontractor is hereby authorized to charge and retain an additional motor vehicle registration fee not to exceed $5 00 for each motor vehicle registration issued, and will report to the County Tax Assessor/Collector only the amount of fees it collects under this provision

9) Termination

Prior to the expiration of the term, either party may terminate this Agreement with or without cause or mutual convenience upon ten (10) days written notice to the other party All equipment and software provided under this agreement will be returned to the County immediately upon the termination of this agreement Within ten (10) days after the effective date of termination, Subcontractor must submit a termination statement and report for the month in which termination occurs Upon the conduct of a final audit and satisfactory reconciliation of all amounts due the County hereunder, the County will return the bond or letter of credit provided under this agreement

10) Miscellaneous notices and disclosures

This agreement is contingent upon the receipt of the equipment specified herein from the State of Texas The parties agree the equipment and related software is the property of the State of Texas, and is only provided to the Subcontractor pursuant to this agreement In the event the State imposes additional obligations upon the County, such obligations shall immediately become binding upon the Subcontractor, and the County shall notify the Subcontractor forthwith

In the event of nonpayment or other default, Subcontractor shall cure such default within ten (10) days of the default The County Tax Assessor/Collector may enter onto Subcontractor's premises and remove the Workstations/Equipment and supplies if the default is not cured within ten (10) days In the event the Workstations/Equipment removal is because of Subcontractor's nonpayment or other default, Subcontractor forfeits any portion of annual lease fee that remains

This lease shall be governed by and construed under the laws of the State of Texas Furthermore, the venue for any action filed pertaining to the lease or the equipment subject to this lease shall be located in Galveston County, Texas

This lease and the accompanying Exhibits constitute the entire agreement between the parties and no representation made between the parties and not reduced to writing herein shall be of any force or effect Any previous agreement entered into between the parties to effect the purposes set forth herein and herby set aside and held for naught This agreement may not be modified except by written agreement between

parties If any provision is invalid, it shall be considered deleted from this lease, and shall not invalidate the remaining provisions of this lease

This lease is not binding until executed by a proper officer of lessor, and until the receipt and acceptance by the lessor of the annual rental fee provided for under this lease

Any notice permitted or required to be given hereunder to Subcontractor or County must be given by registered or certified Unites States mail, postage prepaid, return receipt requested, or facsimile transmission addressed to

Subcontractor

Cook Ford

2600 Palmer Highway

Texas City, TX 77590

Phone 409-948-2541

Fax 409-948-9023

Any notice permitted or requested to be given hereunder to County may be given by registered or certified United States mail, postage prepaid, return receipt requested, or by facsimile transmission addressed to

Galveston County Tax Assessor/Collector

Attention Business Services

722 Moody Avenue

Galveston, Texas 77550

Facsimile: 409-766-4563

In performing the services hereunder, Subcontractor must comply with all acceptable Federal, State, and local laws, regulations, rules, and ordinances now in effect or which may hereafter be promulgated that pertain to this Agreement Subcontractor shall report and pay applicable federal and local taxes

This agreement is signed and approved by the Commissioner's Court of Galveston County as required under the provisions of Transportation Code §502 122

GALVESTON COUNTY, TEXAS

MARK HENRY
County Judge
Galveston County, Texas

Date 8/21/12

CHERYL E JOHNSON
County Tax Assessor/Collector
Galveston County, Texas

Date 8/16/12

Attest

Dwight Sullivan
County Clerk

By: Brandy Chapman Deputy
Brandy Chapman

By
Subcontractor

Exhibit A

Galveston County RSPS Equipment Inventory Listing

Date September 1, 2012

Location of Equipment 2600 Palmer Highway, Texas City, TX 77590

Remote Sticker Printing System (RSPS) include Laptop preloaded with XP operating system, Printer, hand held bar code scanner, Wireless Print Director, Wireless Access Card, and Surge Protector

RSPS Equipment items

Equipment	Unit Value	Serial Number
Laptop	$1,500 00	KM0312R
Printer	$1,000.00	CNDJB49113
Hand held bar code scanner	$ 100 00	N/A
Surge Protector	$ 15.00	N/A
Wireless Print Director	$ 100 00	SF5004B08406
Wireless Access Card	$ 100.00	BDH40E169037

TxDMV Form 31 Documents	37

Exhibit B

Galveston County RSPS Equipment Lessee Information

Subcontractor Information Sheet

Date September 1, 2012

Business Name COOK FORD

Business Address 2600 Palmer Hwy
Texas City, TX 77590

Mailing Address (same)

Telephone Number 409. 948. 2541

Facsimile Number 409. 948. 9023

Principal Contact STEPHANIE JOHNSON

Contact Person NICOLE FISHER

Contact Telephone 409. 948. 2541

Equipment Location 2600 Palmer Hwy
Texas City, TX 77590

AGENDA ITEM #32c3

GALVESTON COUNTY, TEXAS
COMMISSIONERS COURT
Contract Approval Request

Date of Request:	8-13-12	Department.	Tax Office		
Renewal Contract		Orgkey		Object Code:	
Contract Start Date.	9-1-12	Vendor:	Star Toyota		
Contract End Date.	8-31-15	Vendor No.	707131	Contract No·	
Description					

Contract # Issued By Purchasing·	CM 2-49	Requested Legal Review:	Yes _____ No _____

Fund Name	Fund #	FY12 $ Budget	FY12 $ Request	FY13 $ Request	FY14 $ Request	FY15 $ Request	FY15 $ Request
		Ø					
Totals		-	-	-	-	-	-
Total Cost							

Approved By·	Date	Signature
Department Head:	Cheryl E. Johnson	
Purchasing Agent·	8-14-12	
County Legal.		

Contract listed in Budget Documentation (Yes/No)

County Budget Office·

Form Number

AGREEMENT UNDER TRANSPORTATION CODE CHAPTER 502 FOR SERVICES TO THIRD PARTIES RELATED TO THE LICENSING OF VEHICLES AND SUBLEASE OF REMOTE STICKER PRINTING SYSTEM

This Agreement is entered into pursuant to the provisions of the Texas Transportation Code Ch 502 by and between **Star Toyota**, hereafter referred to as "Subcontractor" and Galveston County, Texas (the "County"), a political subdivision of the State of Texas, acting through the Commissioners Court of Galveston County in conjunction with the Galveston County Tax Assessor/Collector, hereinafter collectively referred to as the "County"

Recitals

Pursuant to the provisions of the Texas Transportation Code §502 112, the Tax Assessor/Collector of the County, with the approval of the Commissioners Court, may deputize an individual to 1) issue motor vehicle registration receipts as a limited service deputy; or 2) issue motor vehicle registration receipts and prepare or accept applications for title transfers as a full service deputy

The County has entered into an agreement with the State of Texas (the "State") to lease Remote Sticker Processing Systems (RSPS) to provide registration and/or title update connectivity and processing on the State's Registration and Title System ("RTS") As part of the RTS, the County is further authorized to have Remote Sticker Printing System ("RSPS") equipment at any location within the County under agreements with Subcontractors desiring to have such on-premises capabilities It is to

the advantage of County residents to have RSPS equipment and RTS workstations at various locations throughout the County

The Subcontractor desires to be deputized pursuant to Texas Transportation Code §502 122(a)(2) an lease RTS workstations and/or RSPS equipment from the County for the purpose of performing such duties pursuant to Transportation Code §502 144

The County's RTS program is operated and administered by the Galveston County Tax Assessor/Collector, as part of the County Tax Assessor/Collector's registration and titling duties under the Texas Transportation Code, and the duties and obligations incumbent upon the County under this agreement will be performed through that office

NOW, THEREFORE, for and in consideration of the mutual covenants, agreements and benefits to the parties herein named, it is agreed as follows

1) Contract Terms

The contract is effective for one year terms with an initial term beginning on September 1, 2012 and ending on August 31, 2013 This contract will automatically renew for two subsequent renewal terms unless terminated earlier by the parties, in all events this contract will expire on August 31, 2015.

2) Scope of Services

The parties acknowledge that pursuant to Transportation Code §502 114, only full service deputies may be given the authority to use the data processing equipment and software made the subject of the agreement, thus the parties agree that the

Subcontractor shall act only as a full service deputy in accordance with the provisions of Transportation Code §502 112(a)(2) and §502 114

3) Lease of Equipment

The County will lease the Subcontractor the RTS workstations (the "Workstations") and RSPS equipment (the "Equipment") listed in Exhibit A, which is attached hereto and made a part hereof The Subcontractor represents that it is fully trained to operate the equipment in accordance with all applicable laws and regulation, but the County, through the County Tax Assessor/Collector, may provide for installation, training, maintenance, and other services at the request of the Subcontractor

The parties agree that the cost for leasing the Workstations/Equipment is set by the State, and that presently the cost is set at Six Hundred Dollars ($600) per year In the event the annual lease amount changes, the County will give Subcontractor at least ten (10) days notice of any actual or proposed change in lease costs

4) Obligations of Subcontractor

Subcontractor must accurately complete the Subcontractor Information Sheet, and attach a copy to the Agreement as Exhibit B If during the term of this Agreement, there are any changes to information contained in the Subcontractor Information Sheet (such as by way of example, but not limitation, changes in name, location , and principal), the Subcontractor shall within ten (10) days submit to the County Tax Assessor/Collector an updated Exhibit B to accurately reflect the changed information

In the event the Subcontractor undergoes a change in ownership, the County Tax Assessor/Collector must be notified immediately so an audit can be conducted of Subcontractor's remaining supplies New owners must be approved by the County Tax Assessor/Collector and must complete and sign a new Sublease with the County Subcontractor must perform all of the services under this Agreement and may not assign this Agreement or any duty or obligation of performance hereunder

Subcontractor is responsible for the costs of all supplies, forms, user support, utilities, connections, wirings, and other matters necessary for the Workstations/Equipment The County's responsibility for equipment installed at Subcontractor's site is limited to ensuring that the equipment remains operational

Subcontractor is responsible for any maintenance or upkeep not provided by the State Subcontractor shall not modify the Workstations/Equipment Subcontractor shall be further responsible for full repair or replacement costs for the Workstations/Equipment in the event that these items under Subcontractor's control are damaged or lost All repair work must be performed by the State or the State's designee The repair cost shall be determined by the State of the State approved contractor Subcontractor's payment for repair or replacement costs for damaged or lost Workstations/Equipment shall be remitted by Subcontractor to the County Tax Assessor/Collector within seven (7) days of written request by the County Tax Assessor/Collector

Subcontractor shall in all respects be responsible for and hold the County harmless from any damage to or the destruction of Workstations/Equipment installed

or housed at Subcontractor's location, and the Subcontractor specifically agrees that Exhibit A states the replacement cost which the Subcontractor agrees to pay upon the determination by the State of Subcontractor's liability for lost or damaged equipment

5) Subcontractor bond requirements

In accordance with the provisions of Texas Transportation Code §502 112, the Subcontractor shall post a bond, made payable to Cheryl E Johnson, Tax Assessor/Collector of Galveston County in the amount of $6,000 00 for the RSPS equipment plus $1,000 00 for each of the 69 TxDMV form 31s issued to subcontractor totaling $75,000 00 conditioned upon the Subcontractor's proper accounting and remittance of all fees the Subcontractor collects under this agreement In lieu of a bond, the Subcontractor may provide an irrevocable letter of credit drawn upon a bank licensed to operate in the State of Texas

6) Subcontractor payments to the County

Subcontractor will pay a non-refundable lease fee of $600 00 immediately upon the execution of this agreement in satisfaction of the lease payment for the initial term of the agreement The check will be made payable to the County of Galveston and shall specifically note it is the lease payment required under this agreement For renewal terms, the County Tax Assessor/Collector shall invoice Subcontractor for the annual lease payment due the County.

In the event the County provides the Subcontractor with services for the installation, maintenance or other associated services with the equipment, or provides training to the Subcontractor in the operation and maintenance of the equipment, or

there is any other cost associated with the leasing of this equipment to the Subcontractor, the County, in conjunction with the County Tax Assessor/Collector, will issue the Subcontractor an invoice for the cost of such services including Workstations/Equipment and ongoing costs Subcontractor shall pay for such services within ten (10) business days of receiving an invoice

7) Subcontractor reports and responsibilities

The Subcontractor must report the activities for which the equipment is utilized as set forth herein

Subcontractor will provide a detailed report of daily sales Reports must be on a flash drive, or other medium selected by the County Tax Assessor/Collector that is compatible with the RSPS system But the parties agree that as of the date of the execution of this agreement, the flash drive is the medium utilized pursuant to the requirements of the State of Texas

If Subcontractor issues a renewal sticker in error, Subcontractor shall make an immediate report to the County Tax Assessor/Collector and have the sticker returned to the County Tax Assessor/Collector for cancellation If a sticker is issued in error and not reported to the County Tax Assessor Collector, Subcontractor shall pay a fee the equivalent to the registration and/or title fee issued in error upon demand without the necessity of the County issuing an invoice

If Subcontractor becomes aware of or suspects fraud, Subcontractor shall report same to the County Tax Assessor/Collector by telephone within 24 hours and in writing within three (3) business days Subcontractor shall not allow the

Workstations/Equipment to be used for the purpose of defrauding the State or avoiding taxation

Subcontractor shall provide access to authorized representatives of the County Tax Assessor/Collector to Subcontractor's area where registration, titling, and licensing occurs Subcontractor will also assist the County Tax Assessor/Collector in audits of Subcontractor's licensing, titling, and performance of this Agreement

Subcontractor's use of the Workstations/Equipment shall be subject to and in compliance with the terms and conditions of the agreement for the use of the Workstations/Equipment between the State of Texas and the County, and any amendments thereto

Subcontractor shall not remove the Workstations/Equipment from Subcontractor's location specified in this Agreement without the prior written consent of the County Tax Assessor/Collector

If Subcontractor accepts personal checks for payment, such act is done at Subcontractor's personal risk

All of Subcontractor's employees who process registration and titles must be deputized through the County Tax Assessor/Collector's Office and bonded prior to the issuing of any receipts, stickers, or license plates Subcontractor will notify the County Tax Assessor/Collector within 24 hours whenever a deputized employee leaves Subcontractor's employment All employees, whether new, transferred or providing back-up coverage must be deputized and bonded prior to assuming the license and title

work duties If there are any changes in ownership, Subcontractor's employees who handle license and title work must be re-deputized

8) Fees allowed to Subcontractor

Pursuant to Transportation Code §502 114, a full-service deputy appointed under shall accept any application for registration, registration renewal, or title transfer that the County Tax Assessor/Collector may accept Such fees shall be remitted to the County Tax Assessor/Collector

The Subcontractor is hereby authorized to charge and retain an additional motor vehicle registration fee not to exceed $5 00 for each motor vehicle registration issued, and will report to the County Tax Assessor/Collector only the amount of fees it collects under this provision

9) Termination

Prior to the expiration of the term, either party may terminate this Agreement with or without cause or mutual convenience upon ten (10) days written notice to the other party All equipment and software provided under this agreement will be returned to the County immediately upon the termination of this agreement Within ten (10) days after the effective date of termination, Subcontractor must submit a termination statement and report for the month in which termination occurs Upon the conduct of a final audit and satisfactory reconciliation of all amounts due the County hereunder, the County will return the bond or letter of credit provided under this agreement

10) Miscellaneous notices and disclosures

This agreement is contingent upon the receipt of the equipment specified herein from the State of Texas The parties agree the equipment and related software is the property of the State of Texas, and is only provided to the Subcontractor pursuant to this agreement In the event the State imposes additional obligations upon the County, such obligations shall immediately become binding upon the Subcontractor, and the County shall notify the Subcontractor forthwith

In the event of nonpayment or other default, Subcontractor shall cure such default within ten (10) days of the default The County Tax Assessor/Collector may enter onto Subcontractor's premises and remove the Workstations/Equipment and supplies if the default is not cured within ten (10) days In the event the Workstations/Equipment removal is because of Subcontractor's nonpayment or other default, Subcontractor forfeits any portion of annual lease fee that remains

This lease shall be governed by and construed under the laws of the State of Texas Furthermore, the venue for any action filed pertaining to the lease or the equipment subject to this lease shall be located in Galveston County, Texas

This lease and the accompanying Exhibits constitute the entire agreement between the parties and no representation made between the parties and not reduced to writing herein shall be of any force or effect Any previous agreement entered into between the parties to effect the purposes set forth herein and herby set aside and held for naught This agreement may not be modified except by written agreement between

parties If any provision is invalid, it shall be considered deleted from this lease, and shall not invalidate the remaining provisions of this lease

This lease is not binding until executed by a proper officer of lessor, and until the receipt and acceptance by the lessor of the annual rental fee provided for under this lease

Any notice permitted or required to be given hereunder to Subcontractor or County must be given by registered or certified Unites States mail, postage prepaid, return receipt requested, or facsimile transmission addressed to

Subcontractor

Star Toyota

2112 Gulf Freeway

League City, TX 77573

Phone 409-943-5659

Fax 281-332-1650

Any notice permitted or requested to be given hereunder to County may be given by registered or certified United States mail, postage prepaid, return receipt requested, or by facsimile transmission addressed to

Galveston County Tax Assessor/Collector

Attention Business Services

722 Moody Avenue

Galveston, Texas 77550

Facsimile 409-766-4563

In performing the services hereunder, Subcontractor must comply with all acceptable Federal, State, and local laws, regulations, rules, and ordinances now in effect or which may hereafter be promulgated that pertain to this Agreement Subcontractor shall report and pay applicable federal and local taxes

This agreement is signed and approved by the Commissioner's Court of Galveston County as required under the provisions of Transportation Code §502 122

GALVESTON COUNTY, TEXAS

MARK HENRY
County Judge
Galveston County, Texas

Date 8/21/12

CHERYL E JOHNSON
County Tax Assessor/Collector
Galveston County, Texas

Date 8/16/12

Attest.

Dwight Sullivan
County Clerk
By: Brandy Chapman Deputy
Brandy Chapman

By Andy D Hobbs
Subcontractor

Exhibit A

Galveston County RSPS Equipment Inventory Listing

Date September 1, 2012

Location of Equipment 2112 Gulf Freeway, League City, TX 77573

Remote Sticker Printing System (RSPS) include Laptop preloaded with XP operating system, Printer, hand held bar code scanner, Wireless Print Director, Wireless Access Card, and Surge Protector

RSPS Equipment items

Equipment	Unit Value	Serial Number
Laptop	$1,500 00	KM0352G
Printer	$1,000 00	CNDJC55580
Hand held bar code scanner	$ 100 00	N/A
Surge Protector	$ 15 00	N/A
Wireless Print Director	$ 100 00	N/A
Wireless Access Card	$ 100 00	N/A

TxDMV Form 31 Documents	69

Exhibit B

Galveston County RSPS Equipment Lessee Information

Subcontractor Information Sheet

Date September 1, 2012

Business Name Star Toyota

Business Address 2112 Gulf Freeway
League City, TX 77573

Mailing Address SAME

Telephone Number 281-316-4800

Facsimile Number 281-338-8733

Principal Contact KATHY CHOATE

Contact Person CAROLYN HIBBARD

Contact Telephone 281-316-4800 281-316-4821

Equipment Location SAME

AGENDA ITEM #32c4

GALVESTON COUNTY, TEXAS
COMMISSIONERS COURT
Contract Approval Request

Date of Request.	8-13 12	Department	Tax Office		
Renewal Contract·		Orgkey·		Object Code·	
Contract Start Date.	9-1-12	Vendor:	Demontrond		
Contract End Date:	831-15	Vendor No·	701865	Contract No·	
Description.					
Contract # Issued By Purchasing.		CM 12 2.50	Requested Legal Review.	Yes _____ No _____	

Fund Name	Fund #	FY12 $ Budget	FY12 $ Request	FY13 $ Request	FY14 $ Request	FY15 $ Request	FY15 $ Request
		Ø					
Totals:		-	-	-	-	-	-
Total Cost.							

Approved By	Date	Signature
Department Head:	Cheryl E. Johnson	
Purchasing Agent·	8-14-12	
County Legal		

Contract listed in Budget Documentation (Yes/No)

County Budget Office:

Form Number

AGREEMENT UNDER TRANSPORTATION CODE CHAPTER 502 FOR SERVICES TO THIRD PARTIES RELATED TO THE LICENSING OF VEHICLES AND SUBLEASE OF REMOTE STICKER PRINTING SYSTEM

This Agreement is entered into pursuant to the provisions of the Texas Transportation Code Ch 502 by and between **Demontrond**, hereafter Referred to as "Subcontractor" and Galveston County, Texas (the "County"), a political subdivision of the State of Texas, acting through the Commissioners Court of Galveston County in conjunction with the Galveston County Tax Assessor/Collector, hereinafter collectively referred to as the "County"

Recitals

Pursuant to the provisions of the Texas Transportation Code §502 112, the Tax Assessor/Collector of the County, with the approval of the Commissioners Court, may deputize an individual to 1) issue motor vehicle registration receipts as a limited service deputy, or 2) issue motor vehicle registration receipts and prepare or accept applications for title transfers as a full service deputy

The County has entered into an agreement with the State of Texas (the "State") to lease Remote Sticker Processing Systems (RSPS) to provide registration and/or title update connectivity and processing on the State's Registration and Title System ("RTS") As part of the RTS, the County is further authorized to have Remote Sticker Printing System ("RSPS") equipment at any location within the County under agreements with Subcontractors desiring to have such on-premises capabilities It is to

the advantage of County residents to have RSPS equipment and RTS workstations at various locations throughout the County

The Subcontractor desires to be deputized pursuant to Texas Transportation Code §502 122(a)(2) an lease RTS workstations and/or RSPS equipment from the County for the purpose of performing such duties pursuant to Transportation Code §502 144

The County's RTS program is operated and administered by the Galveston County Tax Assessor/Collector, as part of the County Tax Assessor/Collector's registration and titling duties under the Texas Transportation Code, and the duties and obligations incumbent upon the County under this agreement will be performed through that office

NOW, THEREFORE, for and in consideration of the mutual covenants, agreements and benefits to the parties herein named, it is agreed as follows

1) Contract Terms

The contract is effective for one year terms with an initial term beginning on September 1, 2012 and ending on August 31, 2013 This contract will automatically renew for two subsequent renewal terms unless terminated earlier by the parties, in all events this contract will expire on August 31, 2015

2) Scope of Services

The parties acknowledge that pursuant to Transportation Code §502 114, only full service deputies may be given the authority to use the data processing equipment and software made the subject of the agreement, thus the parties agree that the

Subcontractor shall act only as a full service deputy in accordance with the provisions of Transportation Code §502 112(a)(2) and §502 114

3) Lease of Equipment

The County will lease the Subcontractor the RTS workstations (the "Workstations") and RSPS equipment (the "Equipment") listed in Exhibit A, which is attached hereto and made a part hereof The Subcontractor represents that it is fully trained to operate the equipment in accordance with all applicable laws and regulation, but the County, through the County Tax Assessor/Collector, may provide for installation, training, maintenance, and other services at the request of the Subcontractor

The parties agree that the cost for leasing the Workstations/Equipment is set by the State, and that presently the cost is set at Six Hundred Dollars ($600) per year In the event the annual lease amount changes, the County will give Subcontractor at least ten (10) days notice of any actual or proposed change in lease costs

4) Obligations of Subcontractor

Subcontractor must accurately complete the Subcontractor Information Sheet, and attach a copy to the Agreement as Exhibit B If during the term of this Agreement, there are any changes to information contained in the Subcontractor Information Sheet (such as by way of example, but not limitation, changes in name, location , and principal), the Subcontractor shall within ten (10) days submit to the County Tax Assessor/Collector an updated Exhibit B to accurately reflect the changed information

In the event the Subcontractor undergoes a change in ownership, the County Tax Assessor/Collector must be notified immediately so an audit can be conducted of Subcontractor's remaining supplies New owners must be approved by the County Tax Assessor/Collector and must complete and sign a new Sublease with the County Subcontractor must perform all of the services under this Agreement and may not assign this Agreement or any duty or obligation of performance hereunder

Subcontractor is responsible for the costs of all supplies, forms, user support, utilities, connections, wirings, and other matters necessary for the Workstations/Equipment The County's responsibility for equipment installed at Subcontractor's site is limited to ensuring that the equipment remains operational

Subcontractor is responsible for any maintenance or upkeep not provided by the State Subcontractor shall not modify the Workstations/Equipment Subcontractor shall be further responsible for full repair or replacement costs for the Workstations/Equipment in the event that these items under Subcontractor's control are damaged or lost All repair work must be performed by the State or the State's designee The repair cost shall be determined by the State of the State approved contractor Subcontractor's payment for repair or replacement costs for damaged or lost Workstations/Equipment shall be remitted by Subcontractor to the County Tax Assessor/Collector within seven (7) days of written request by the County Tax Assessor/Collector

Subcontractor shall in all respects be responsible for and hold the County harmless from any damage to or the destruction of Workstations/Equipment installed

or housed at Subcontractor's location, and the Subcontractor specifically agrees that Exhibit A states the replacement cost which the Subcontractor agrees to pay upon the determination by the State of Subcontractor's liability for lost or damaged equipment

5) Subcontractor bond requirements

In accordance with the provisions of Texas Transportation Code §502 112, the Subcontractor shall post a bond, made payable to Cheryl E Johnson, Tax Assessor/Collector of Galveston County in the amount of $6,000 00 for the RSPS equipment plus $1,000 00 for each of the 44 TxDMV form 31s issued to subcontractor totaling $50,000 00 conditioned upon the Subcontractor's proper accounting and remittance of all fees the Subcontractor collects under this agreement In lieu of a bond, the Subcontractor may provide an irrevocable letter of credit drawn upon a bank licensed to operate in the State of Texas

6) Subcontractor payments to the County

Subcontractor will pay a non-refundable lease fee of $600 00 immediately upon the execution of this agreement in satisfaction of the lease payment for the initial term of the agreement The check will be made payable to the County of Galveston and shall specifically note it is the lease payment required under this agreement For renewal terms, the County Tax Assessor/Collector shall invoice Subcontractor for the annual lease payment due the County

In the event the County provides the Subcontractor with services for the installation, maintenance or other associated services with the equipment, or provides training to the Subcontractor in the operation and maintenance of the equipment, or

there is any other cost associated with the leasing of this equipment to the Subcontractor, the County, in conjunction with the County Tax Assessor/Collector, will issue the Subcontractor an invoice for the cost of such services including Workstations/Equipment and ongoing costs Subcontractor shall pay for such services within ten (10) business days of receiving an invoice

7) Subcontractor reports and responsibilities

The Subcontractor must report the activities for which the equipment is utilized as set forth herein

Subcontractor will provide a detailed report of daily sales Reports must be on a flash drive, or other medium selected by the County Tax Assessor/Collector that is compatible with the RSPS system But the parties agree that as of the date of the execution of this agreement, the flash drive is the medium utilized pursuant to the requirements of the State of Texas

If Subcontractor issues a renewal sticker in error, Subcontractor shall make an immediate report to the County Tax Assessor/Collector and have the sticker returned to the County Tax Assessor/Collector for cancellation If a sticker is issued in error and not reported to the County Tax Assessor Collector, Subcontractor shall pay a fee the equivalent to the registration and/or title fee issued in error upon demand without the necessity of the County issuing an invoice

If Subcontractor becomes aware of or suspects fraud, Subcontractor shall report same to the County Tax Assessor/Collector by telephone within 24 hours and in writing within three (3) business days Subcontractor shall not allow the

Workstations/Equipment to be used for the purpose of defrauding the State or avoiding taxation

Subcontractor shall provide access to authorized representatives of the County Tax Assessor/Collector to Subcontractor's area where registration, titling, and licensing occurs Subcontractor will also assist the County Tax Assessor/Collector in audits of Subcontractor's licensing, titling, and performance of this Agreement

Subcontractor's use of the Workstations/Equipment shall be subject to and in compliance with the terms and conditions of the agreement for the use of the Workstations/Equipment between the State of Texas and the County, and any amendments thereto

Subcontractor shall not remove the Workstations/Equipment from Subcontractor's location specified in this Agreement without the prior written consent of the County Tax Assessor/Collector

If Subcontractor accepts personal checks for payment, such act is done at Subcontractor's personal risk

All of Subcontractor's employees who process registration and titles must be deputized through the County Tax Assessor/Collector's Office and bonded prior to the issuing of any receipts, stickers, or license plates Subcontractor will notify the County Tax Assessor/Collector within 24 hours whenever a deputized employee leaves Subcontractor's employment All employees, whether new, transferred or providing back-up coverage must be deputized and bonded prior to assuming the license and title

work duties If there are any changes in ownership, Subcontractor's employees who handle license and title work must be re-deputized

8) Fees allowed to Subcontractor

Pursuant to Transportation Code §502 114, a full-service deputy appointed under shall accept any application for registration, registration renewal, or title transfer that the County Tax Assessor/Collector may accept Such fees shall be remitted to the County Tax Assessor/Collector

The Subcontractor is hereby authorized to charge and retain an additional motor vehicle registration fee not to exceed $5 00 for each motor vehicle registration issued, and will report to the County Tax Assessor/Collector only the amount of fees it collects under this provision

9) Termination

Prior to the expiration of the term, either party may terminate this Agreement with or without cause or mutual convenience upon ten (10) days written notice to the other party All equipment and software provided under this agreement will be returned to the County immediately upon the termination of this agreement Within ten (10) days after the effective date of termination, Subcontractor must submit a termination statement and report for the month in which termination occurs Upon the conduct of a final audit and satisfactory reconciliation of all amounts due the County hereunder, the County will return the bond or letter of credit provided under this agreement

10) Miscellaneous notices and disclosures

This agreement is contingent upon the receipt of the equipment specified herein from the State of Texas The parties agree the equipment and related software is the property of the State of Texas, and is only provided to the Subcontractor pursuant to this agreement In the event the State imposes additional obligations upon the County, such obligations shall immediately become binding upon the Subcontractor, and the County shall notify the Subcontractor forthwith

In the event of nonpayment or other default, Subcontractor shall cure such default within ten (10) days of the default The County Tax Assessor/Collector may enter onto Subcontractor's premises and remove the Workstations/Equipment and supplies if the default is not cured within ten (10) days In the event the Workstations/Equipment removal is because of Subcontractor's nonpayment or other default, Subcontractor forfeits any portion of annual lease fee that remains

This lease shall be governed by and construed under the laws of the State of Texas Furthermore, the venue for any action filed pertaining to the lease or the equipment subject to this lease shall be located in Galveston County, Texas

This lease and the accompanying Exhibits constitute the entire agreement between the parties and no representation made between the parties and not reduced to writing herein shall be of any force or effect. Any previous agreement entered into between the parties to effect the purposes set forth herein and herby set aside and held for naught This agreement may not be modified except by written agreement between

parties If any provision is invalid, it shall be considered deleted from this lease, and shall not invalidate the remaining provisions of this lease

This lease is not binding until executed by a proper officer of lessor, and until the receipt and acceptance by the lessor of the annual rental fee provided for under this lease

Any notice permitted or required to be given hereunder to Subcontractor or County must be given by registered or certified Unites States mail, postage prepaid, return receipt requested, or facsimile transmission addressed to

Subcontractor

Demontrond

3220 I-45 North

Texas City, TX 77591

Phone 281-337-1100

Fax 281-309-5830

Any notice permitted or requested to be given hereunder to County may be given by registered or certified United States mail, postage prepaid, return receipt requested, or by facsimile transmission addressed to.

Galveston County Tax Assessor/Collector

Attention Business Services

722 Moody Avenue

Galveston, Texas 77550

Facsimile 409-766-4563

In performing the services hereunder, Subcontractor must comply with all acceptable Federal, State, and local laws, regulations, rules, and ordinances now in effect or which may hereafter be promulgated that pertain to this Agreement Subcontractor shall report and pay applicable federal and local taxes

This agreement is signed and approved by the Commissioner's Court of Galveston County as required under the provisions of Transportation Code §502 122

GALVESTON COUNTY, TEXAS

MARK HENRY
County Judge
Galveston County, Texas

Date 8/21/12

CHERYL E JOHNSON
County Tax Assessor/Collector
Galveston County, Texas

Date 8/16/12

Attest

Dwight Sullivan
County Clerk

By: Brandy Chapman Deputy
Brandy Chapman

By: _____
Subcontractor

Exhibit A

Galveston County RSPS Equipment Inventory Listing

Date September 1, 2012

Location of Equipment· 3220 I-45 North, Texas City, TX 77591

Remote Sticker Printing System (RSPS) include Laptop preloaded with XP operating system, Printer, hand held bar code scanner, Wireless Print Director, Wireless Access Card, and Surge Protector

RSPS Equipment items

Equipment	Unit Value	Serial Number
Laptop	$1,500 00	KM0351V
Printer	$1,000 00	CNDJC55556
Hand held bar code scanner	$ 100 00	N/A
Surge Protector	$ 15 00	N/A
Wireless Print Director	$ 100 00	N/A
Wireless Access Card	$ 100 00	N/A

TxDMV Form 31 Documents	44

Exhibit B

Galveston County RSPS Equipment Lessee Information

Subcontractor Information Sheet

Date September 1, 2012

Business Name DeMontrond

Business Address 3220 I-45 North
Texas City, Tx 77591

Mailing Address

Telephone Number 281 337 1100

Facsimile Number 281 872 3857

Principal Contact Melissa DeMontrond

Contact Person Dawn Kelleg

Contact Telephone 281 877 3105

Equipment Location. 3220 I 45 North
Texas City Tx 77591

AGENDA ITEM #32c5

GALVESTON COUNTY, TEXAS
COMMISSIONERS COURT
Contract Approval Request

Date of Request	8 13 12	Department.	Tax Office		
Renewal Contract·		Orgkey·		Object Code:	
Contract Start Date:	9-1-12	Vendor·	GAY BUICK GMC, Inc		
Contract End Date:	8 31-15	Vendor No.	400260	Contract No:	
Description					
Contract # Issued By Purchasing.	C.M1 2252	Requested Legal Review.	Yes _____ No _____		

Fund Name	Fund #	FY12 $ Budget	FY12 $ Request	FY13 $ Request	FY14 $ Request	FY15 $ Request	FY15 $ Request
		Ø					
Totals.		-	-	-	-	-	-
Total Cost							

Approved By	Date	Signature
Department Head·		Cheryl E. Johnson
Purchasing Agent	8-14-2012	
County Legal		

Contract listed in Budget Documentation (Yes/No)

County Budget Office.

Form Number

AGREEMENT UNDER TRANSPORTATION CODE CHAPTER 502 FOR SERVICES TO THIRD PARTIES RELATED TO THE LICENSING OF VEHICLES AND SUBLEASE OF REMOTE STICKER PRINTING SYSTEM

This Agreement is entered into pursuant to the provisions of the Texas Transportation Code Ch 502 by and between **Gay Buick GMC, Inc**, hereafter Referred to as "Subcontractor" and Galveston County, Texas (the "County"), a political subdivision of the State of Texas, acting through the Commissioners Court of Galveston County in conjunction with the Galveston County Tax Assessor/Collector, hereinafter collectively referred to as the "County"

Recitals

Pursuant to the provisions of the Texas Transportation Code §502 112, the Tax Assessor/Collector of the County, with the approval of the Commissioners Court, may deputize an individual to 1) issue motor vehicle registration receipts as a limited service deputy, or 2) issue motor vehicle registration receipts and prepare or accept applications for title transfers as a full service deputy

The County has entered into an agreement with the State of Texas (the "State") to lease Remote Sticker Processing Systems (RSPS) to provide registration and/or title update connectivity and processing on the State's Registration and Title System ("RTS") As part of the RTS, the County is further authorized to have Remote Sticker Printing System ("RSPS") equipment at any location within the County under agreements with Subcontractors desiring to have such on-premises capabilities It is to

the advantage of County residents to have RSPS equipment and RTS workstations at various locations throughout the County

The Subcontractor desires to be deputized pursuant to Texas Transportation Code §502 122(a)(2) an lease RTS workstations and/or RSPS equipment from the County for the purpose of performing such duties pursuant to Transportation Code §502 144

The County's RTS program is operated and administered by the Galveston County Tax Assessor/Collector, as part of the County Tax Assessor/Collector's registration and titling duties under the Texas Transportation Code, and the duties and obligations incumbent upon the County under this agreement will be performed through that office

NOW, THEREFORE, for and in consideration of the mutual covenants, agreements and benefits to the parties herein named, it is agreed as follows

1) Contract Terms

The contract is effective for one year terms with an initial term beginning on September 1, 2012 and ending on August 31, 2013 This contract will automatically renew for two subsequent renewal terms unless terminated earlier by the parties, in all events this contract will expire on January 31, 2015

2) Scope of Services

The parties acknowledge that pursuant to Transportation Code §502 114, only full service deputies may be given the authority to use the data processing equipment and software made the subject of the agreement, thus the parties agree that the

Subcontractor shall act only as a full service deputy in accordance with the provisions of Transportation Code §502 112(a)(2) and §502 114

3) Lease of Equipment

The County will lease the Subcontractor the RTS workstations (the "Workstations") and RSPS equipment (the "Equipment") listed in Exhibit A, which is attached hereto and made a part hereof The Subcontractor represents that it is fully trained to operate the equipment in accordance with all applicable laws and regulation, but the County, through the County Tax Assessor/Collector, may provide for installation, training, maintenance, and other services at the request of the Subcontractor

The parties agree that the cost for leasing the Workstations/Equipment is set by the State, and that presently the cost is set at Six Hundred Dollars ($600) per year In the event the annual lease amount changes, the County will give Subcontractor at least ten (10) days notice of any actual or proposed change in lease costs

4) Obligations of Subcontractor

Subcontractor must accurately complete the Subcontractor Information Sheet, and attach a copy to the Agreement as Exhibit B If during the term of this Agreement, there are any changes to information contained in the Subcontractor Information Sheet (such as by way of example, but not limitation, changes in name, location , and principal), the Subcontractor shall within ten (10) days submit to the County Tax Assessor/Collector an updated Exhibit B to accurately reflect the changed information

In the event the Subcontractor undergoes a change in ownership, the County Tax Assessor/Collector must be notified immediately so an audit can be conducted of Subcontractor's remaining supplies New owners must be approved by the County Tax Assessor/Collector and must complete and sign a new Sublease with the County Subcontractor must perform all of the services under this Agreement and may not assign this Agreement or any duty or obligation of performance hereunder

Subcontractor is responsible for the costs of all supplies, forms, user support, utilities, connections, wirings, and other matters necessary for the Workstations/Equipment The County's responsibility for equipment installed at Subcontractor's site is limited to ensuring that the equipment remains operational

Subcontractor is responsible for any maintenance or upkeep not provided by the State Subcontractor shall not modify the Workstations/Equipment Subcontractor shall be further responsible for full repair or replacement costs for the Workstations/Equipment in the event that these items under Subcontractor's control are damaged or lost All repair work must be performed by the State or the State's designee. The repair cost shall be determined by the State of the State approved contractor Subcontractor's payment for repair or replacement costs for damaged or lost Workstations/Equipment shall be remitted by Subcontractor to the County Tax Assessor/Collector within seven (7) days of written request by the County Tax Assessor/Collector

Subcontractor shall in all respects be responsible for and hold the County harmless from any damage to or the destruction of Workstations/Equipment installed

or housed at Subcontractor's location, and the Subcontractor specifically agrees that Exhibit A states the replacement cost which the Subcontractor agrees to pay upon the determination by the State of Subcontractor's liability for lost or damaged equipment

5) Subcontractor bond requirements

In accordance with the provisions of Texas Transportation Code §502 112, the Subcontractor shall post a bond, made payable to Cheryl E Johnson, Tax Assessor/Collector of Galveston County in the amount of $6,000 00 for the RSPS equipment plus $1,000 00 for each of the 99 TxDMV form 31s issued to subcontractor totaling $105,000 00 conditioned upon the Subcontractor's proper accounting and remittance of all fees the Subcontractor collects under this agreement In lieu of a bond, the Subcontractor may provide an irrevocable letter of credit drawn upon a bank licensed to operate in the State of Texas

6) Subcontractor payments to the County

Subcontractor will pay a non-refundable lease fee of $600 00 immediately upon the execution of this agreement in satisfaction of the lease payment for the initial term of the agreement The check will be made payable to the County of Galveston and shall specifically note it is the lease payment required under this agreement For renewal terms, the County Tax Assessor/Collector shall invoice Subcontractor for the annual lease payment due the County

In the event the County provides the Subcontractor with services for the installation, maintenance or other associated services with the equipment, or provides training to the Subcontractor in the operation and maintenance of the equipment, or

there is any other cost associated with the leasing of this equipment to the Subcontractor, the County, in conjunction with the County Tax Assessor/Collector, will issue the Subcontractor an invoice for the cost of such services including Workstations/Equipment and ongoing costs Subcontractor shall pay for such services within ten (10) business days of receiving an invoice

7) Subcontractor reports and responsibilities

The Subcontractor must report the activities for which the equipment is utilized as set forth herein

Subcontractor will provide a detailed report of daily sales Reports must be on a flash drive, or other medium selected by the County Tax Assessor/Collector that is compatible with the RSPS system But the parties agree that as of the date of the execution of this agreement, the flash drive is the medium utilized pursuant to the requirements of the State of Texas

If Subcontractor issues a renewal sticker in error, Subcontractor shall make an immediate report to the County Tax Assessor/Collector and have the sticker returned to the County Tax Assessor/Collector for cancellation If a sticker is issued in error and not reported to the County Tax Assessor Collector, Subcontractor shall pay a fee the equivalent to the registration and/or title fee issued in error upon demand without the necessity of the County issuing an invoice

If Subcontractor becomes aware of or suspects fraud, Subcontractor shall report same to the County Tax Assessor/Collector by telephone within 24 hours and in writing within three (3) business days Subcontractor shall not allow the

Workstations/Equipment to be used for the purpose of defrauding the State or avoiding taxation

Subcontractor shall provide access to authorized representatives of the County Tax Assessor/Collector to Subcontractor's area where registration, titling, and licensing occurs Subcontractor will also assist the County Tax Assessor/Collector in audits of Subcontractor's licensing, titling, and performance of this Agreement

Subcontractor's use of the Workstations/Equipment shall be subject to and in compliance with the terms and conditions of the agreement for the use of the Workstations/Equipment between the State of Texas and the County, and any amendments thereto

Subcontractor shall not remove the Workstations/Equipment from Subcontractor's location specified in this Agreement without the prior written consent of the County Tax Assessor/Collector

If Subcontractor accepts personal checks for payment, such act is done at Subcontractor's personal risk

All of Subcontractor's employees who process registration and titles must be deputized through the County Tax Assessor/Collector's Office and bonded prior to the issuing of any receipts, stickers, or license plates Subcontractor will notify the County Tax Assessor/Collector within 24 hours whenever a deputized employee leaves Subcontractor's employment All employees, whether new, transferred or providing back-up coverage must be deputized and bonded prior to assuming the license and title

work duties If there are any changes in ownership, Subcontractor's employees who handle license and title work must be re-deputized

8) Fees allowed to Subcontractor

Pursuant to Transportation Code §502 114, a full-service deputy appointed under shall accept any application for registration, registration renewal, or title transfer that the County Tax Assessor/Collector may accept Such fees shall be remitted to the County Tax Assessor/Collector

The Subcontractor is hereby authorized to charge and retain an additional motor vehicle registration fee not to exceed $5 00 for each motor vehicle registration issued, and will report to the County Tax Assessor/Collector only the amount of fees it collects under this provision

9) Termination

Prior to the expiration of the term, either party may terminate this Agreement with or without cause or mutual convenience upon ten (10) days written notice to the other party All equipment and software provided under this agreement will be returned to the County immediately upon the termination of this agreement Within ten (10) days after the effective date of termination, Subcontractor must submit a termination statement and report for the month in which termination occurs Upon the conduct of a final audit and satisfactory reconciliation of all amounts due the County hereunder, the County will return the bond or letter of credit provided under this agreement

10) Miscellaneous notices and disclosures

This agreement is contingent upon the receipt of the equipment specified herein from the State of Texas The parties agree the equipment and related software is the property of the State of Texas, and is only provided to the Subcontractor pursuant to this agreement In the event the State imposes additional obligations upon the County, such obligations shall immediately become binding upon the Subcontractor, and the County shall notify the Subcontractor forthwith

In the event of nonpayment or other default, Subcontractor shall cure such default within ten (10) days of the default The County Tax Assessor/Collector may enter onto Subcontractor's premises and remove the Workstations/Equipment and supplies if the default is not cured within ten (10) days In the event the Workstations/Equipment removal is because of Subcontractor's nonpayment or other default, Subcontractor forfeits any portion of annual lease fee that remains

This lease shall be governed by and construed under the laws of the State of Texas Furthermore, the venue for any action filed pertaining to the lease or the equipment subject to this lease shall be located in Galveston County, Texas

This lease and the accompanying Exhibits constitute the entire agreement between the parties and no representation made between the parties and not reduced to writing herein shall be of any force or effect Any previous agreement entered into between the parties to effect the purposes set forth herein and herby set aside and held for naught This agreement may not be modified except by written agreement between

parties If any provision is invalid, it shall be considered deleted from this lease, and shall not invalidate the remaining provisions of this lease

This lease is not binding until executed by a proper officer of lessor, and until the receipt and acceptance by the lessor of the annual rental fee provided for under this lease

Any notice permitted or required to be given hereunder to Subcontractor or County must be given by registered or certified Unites States mail, postage prepaid, return receipt requested, or facsimile transmission addressed to

Subcontractor

Gay Buick GMC, Inc

3033 Gulf Freeway

Dickinson, TX 77539

Phone 281-337-2521

Fax 281-337-3499

Any notice permitted or requested to be given hereunder to County may be given by registered or certified United States mail, postage prepaid, return receipt requested, or by facsimile transmission addressed to

Galveston County Tax Assessor/Collector

Attention Business Services

722 Moody Avenue

Galveston, Texas 77550

Facsimile 409-766-4563

In performing the services hereunder, Subcontractor must comply with all acceptable Federal, State, and local laws, regulations, rules, and ordinances now in effect or which may hereafter be promulgated that pertain to this Agreement Subcontractor shall report and pay applicable federal and local taxes

This agreement is signed and approved by the Commissioner's Court of Galveston County as required under the provisions of Transportation Code §502 122

GALVESTON COUNTY, TEXAS

MARK HENRY
County Judge
Galveston County, Texas

Date 8/21/12

CHERYL E JOHNSON
County Tax Assessor/Collector
Galveston County, Texas

Date 8/16/12

Attest

Dwight Sullivan
County Clerk

By Brandy Chapman Deputy
Brandy Chapman

By. _____
Subcontractor

Exhibit A

Galveston County RSPS Equipment Inventory Listing

Date September 1, 2012

Location of Equipment 3033 Gulf Freeway, Dickinson, TX 77539

Remote Sticker Printing System (RSPS) include Laptop preloaded with XP operating system, Printer, hand held bar code scanner, Wireless Print Director, Wireless Access Card, and Surge Protector

RSPS Equipment items

Equipment	Unit Value	Serial Number
Laptop	$1,500 00	KM0342X
Printer	$1,000.00	CNDJC49175
Hand held bar code scanner	$ 100 00	N/A
Surge Protector	$ 15 00	N/A
Wireless Print Director	$ 100 00	SF5004367361
Wireless Access Card	$ 100 00	BDH40E169031

TxDMV Form 31 Documents	99

Exhibit B

Galveston County RSPS Equipment Lessee Information

Subcontractor Information Sheet

Date September 1, 2012

Business Name Gay Buick GMC

Business Address 3033 Gulf Freeway
Dickinson Tx 77539

Mailing Address P.O. Box 516
Dickinson Tx 77539

Telephone Number 281- 337 -2521

Facsimile Number 281 337 3499

Principal Contact Danny Parchman

Contact Person 281-337-2521

Contact Telephone

Equipment Location

AGENDA ITEM #32d

Cheryl E. Johnson, RTA

Assessor and Collector of Taxes
Galveston County

Galveston County Courthouse
722 Moody Avenue, Galveston, Texas 77550
Toll Free 877-766-2284 Fax 409-766-2479 Office 409-765-3277
Cheryl E Johnson@co galveston tx us

August 16, 2012

Mr Mark Henry
Galveston County Judge
722 Moody
Galveston, Texas 77550

Re Interlocal Tax Collection Agreement

Dear Judge Henry

I am pleased to announce that the Galveston County Tax Office has a new property tax collection customer – Water Control Improvement District #12 Enclosed are two original copies of the agreement for approval by Commissioners Court I would like to have this on the September 4th agenda if at all possible so that we may proceed with a very fast conversion

Should you have questions, please feel free to contact me and thank you for consideration of this request

Sincerely,

Cheryl E. Johnson

Cheryl E. Johnson, RTA

Enclosures

cc Harvey Bazaman, Director, County Legal

INTERLOCAL TAX COLLECTION AGREEMENT

STATE OF TEXAS §

§ **KNOW ALL MEN BY THESE PRESENTS**

COUNTY OF GALVESTON §

Agreement is made and entered into by, between and among the County of Galveston (County), acting by and through its County Commissioners' Court, Water Control Improvement District #12 (Taxing Entity), acting by and through its governing body and Galveston County Tax Assessor Collector, Cheryl E. Johnson (Assessor Collector) for collection of taxes on all real and personal property located within the Taxing Entity's jurisdictional boundaries.

RECITALS

WHEREAS, County and Taxing Entity are political subdivisions of the State of Texas, organized and existing under the laws of the State of Texas; and,

WHEREAS; Assessor Collector is an elected public official charged with the responsibility of the assessment and collection of certain property taxes levied by certain taxing authorities within the boundaries of Galveston County; and

WHEREAS, as set forth in §6.23 of the Texas Property Tax Code, Assessor Collector is required to assess and collect taxes on property in the County for County and for other taxing units if required or not specified under law and if the governing body of a taxing unit requires it under §6.22(c); and.

WHEREAS, County and Taxing Entity each levy a tax against property located in the taxing jurisdictions of both; and,

WHEREAS, the parties find that coordination of the assessment and collection of taxes on property located in the geographic boundaries of both County and Taxing Entity would be expedient, cost effective and mutually beneficial and would promote governmental efficiency;

NOW, THEREFORE, as authorized by Tax Code §6 24 and Government Code Chapter 791, the parties hereto enter into this Agreement in accordance with the terms and for the purposes and considerations herein expressed.

SERVICES TO BE PERFORMED

Assessor Collector will be responsible for the calculation of the Taxing Entity's effective tax rate in accordance with requirements of the Tax Code.

Assessor Collector will timely provide a schedule concerning the publication of tax rates in the newspaper for Taxing Entity Assessor Collector will cause to be published in Taxing Entity's newspaper of choice all notices required under Truth in Taxation regulations. All legal notices prepared will be approved by Taxing Entity in a timely manner. Assessor Collector will invoice Taxing Entity for cost of publications and said invoices will be due and payable upon receipt.

Assessor Collector shall assess and collect taxes on property against which Taxing Entity imposes a tax. Unless otherwise stated herein, a consolidated tax statement will be sent to each property owner who owns property located within County and Taxing Entity on or before October 20th of each calendar year, or as soon thereafter as practicable. Such consolidated tax statements shall also include taxes owed to any other participating taxing entity that, in Assessor Collector's opinion, should be included on such statement.

In the event that either County or Taxing Entity shall fail to adopt and enact a tax rate prior to the later of October 1st or the 60th day after the date the certified appraisal roll is received by the taxing unit, the tax rate for County or Taxing Entity shall be determined in accordance with Section 26.05(c) of the Texas Property Tax Code so that consolidated tax statements may be prepared for mailing. Neither the County nor Assessor Collector shall be liable to Taxing Entity for damages sustained by Taxing Entity due to County or Assessor Collector's failure to comply with the provisions of this paragraph.

County and Assessor Collector agree that all duties required of County and Taxing Entity in preparation of such consolidated tax statements and the collection of taxes due to Taxing Entity shall be performed by Assessor Collector in accordance with §6.23 of the Tax Code and all other applicable statutory provisions.

Assessor Collector shall use all available resources as provided by County to collect such taxes prior to the taxes becoming delinquent.

Assessor Collector may prepare and deliver separate tax bills for Taxing Entity if it has not adopted its tax rate by October 1st or the 60th day after the date the certified appraisal roll is received by the taxing unit. If Taxing Entity has not adopted its tax rate by such date, and if separate bills are prepared and delivered, Taxing Entity shall pay the additional costs incurred by Assessor Collector in preparing and mailing these separate bills.

If a property owner is entitled to a refund, County and Assessor-Collector are authorized to make the refund on collected accounts on Taxing Entity's behalf and withhold the amount of the refund from current collections.

Assessor Collector shall provide, with each disbursement to Taxing Entity, a report showing receipt of all taxes, penalties and interest paid by parcel number

Assessor Collector shall provide Taxing Entity a monthly report reflecting the total amount of current and delinquent taxes, penalties and interest collected by parcel number on Taxing Entity's behalf.

PAYMENT & COST OF SERVICES

Pursuant to §6.27(b) of the Tax Code, the parties agree that Assessor Collector is entitled to a reasonable fee for the services performed under this Agreement, not to exceed the actual costs incurred by County Accordingly, Taxing Entity agrees to pay the fees as specified below.

Collection Services for Entities Participating In County Payment Options:

A per parcel rate for the collection, posting, balancing, reporting, and distribution of current and delinquent real and personal property taxes and fees, an annual amount not to exceed $0.27 per parcel which, when applied to the current number of parcels of 3,139 equates to $847.53 This sum is payable to the Assessor Collector, as follows:

- One-Half (1/2) of the total amount of payment due shall be due and payable at the conclusion of the January payment cycle or no later than March 1 The remaining One-Half (1/2) shall be due upon verification that Assessor Collector has completed year-end financial statements or no later than September 1.
- The annual payment shall be automatically adjusted each year to reflect the actual parcel count as of the most current supplemental appraisal roll for the tax year.

Collection Services for Entities Opting Out of County Payment Options:

Taxing Entity has the authority under §31.03(d) of the Texas Tax Code to opt out of §31.03 payment option offered by County. Due to the complexity of implementing this provision, an additional $0.15 per parcel rate or a total rate of $0.42 per parcel will be assessed for the collection, posting, balancing, reporting, and distribution of current and delinquent real and personal property taxes and fees which, when applied to the current number of parcels of 3,139 equates to $1,318.38. This sum is payable to the Assessor Collector, as follows:

- One-Half (1/2) of the total amount of payment due shall be due and payable at the conclusion of the January payment cycle or no later than March 1. The remaining One-Half (1/2) shall be due upon verification that Assessor Collector has completed year-end financial statements or no later than September 1.
- The annual payment shall be automatically adjusted each year to reflect the actual parcel count as of the most current supplemental appraisal roll for the tax year.

Data Conversion Services

Galveston County will oversee conversion of Taxing Entity's data, said conversion to be performed by Appraisal & Collection Technologies (ACT), Galveston County's software provider. ACT will provide data conversion from Taxing Entity's current system to the ACT system. Assuming cooperative participation by Taxing Entity's previous vendor, Taxing Entity agrees to pay ACT for data conversion services in the following amount:

- the sum of $3,200 or actual costs, whichever is less, for conversion of five (5) full years of account history

Other Costs for Services

On occasion, the need for additional services may arise. In an effort to limit costs for all entities, Assessor Collector agrees to perform additional services on an as requested basis. Savings that may result with multiple entity participation will be distributed equally between participating entities.

All expenses incurred by Assessor Collector in issuing Taxing Entity refunds on overpayment or erroneous payment caused by errors on the part of Taxing Entity shall be included as a charge against Taxing Entity. The Assessor Collector will issue an itemized billing of such expenses and shall receive a timely reimbursement from Taxing Entity. Expenses incurred by Assessor Collector shall be available for review by Entity upon request.

In the event a rollback election occurs, all parties to this contract shall work together to ensure Taxing Entity is able to comply with the requirements imposed upon it. Taxing Entity refunds due to property owners as a result of a rollback shall be withheld from then current collections. Taxing Entity agrees to reimburse County its actual costs for resolving rollback related issues within 30 days of receipt of an invoice from Assessor Collector.

REMITTANCE OF COLLECTIONS

All tax rolls, billing, accounting and collection activities performed by Assessor Collector for Taxing Entity shall be the same as and included with County activities performed by Assessor Collector Collections of Taxing Entity tax receipts by Assessor Collector in excess of $1,000.00 shall be remitted daily to Taxing Entity, upon validation of receipt and availability of funds for distribution from the County depository. Collections less than $1,000.00 may be held by Assessor Collector until such total collections held accumulate to a sum not less than $1,000.00 at which time such remittance will be made to Taxing Entity

All delinquent taxes, penalties and interest for Taxing Entity collected by Taxing Entity's delinquent tax attorneys after July 1 of the first year such taxes are delinquent and all delinquent taxes, penalties and interest for prior years shall be credited in full to Taxing Entity upon request of the property owner or if payable to the Taxing Entity. In the event that the property owner makes no such request, delinquent taxes, penalties, and interest remitted shall be credited proportionately, as billed, to all taxing jurisdictions in the County

TERMS OF AGREEMENT

This Agreement shall be for an initial period commencing on August 1, 2012, and ending on the 31st day of July, 2015 Notwithstanding the foregoing, tax assessment and collection services to be provided by Assessor Collector shall begin with the 2012 tax year.

This Agreement will be automatically renewed on an annual basis unless either party to this Agreement chooses to cancel this Agreement for an upcoming renewal term by giving the other party notice of such cancellation by June 1st of each year.

Tax Assessor Collector shall provide Taxing Entity with notice by April 1 of each year of any increase in the per parcel price for services provided.

In the event this Agreement is not renewed the parties shall together expeditiously to enable Taxing Entity to obtain such information it requires to do so to re-establish its own tax collection efforts or to enable another taxing entity to collect taxes on its behalf. Taxing Entity agrees to reimburse County its actual cost for transferring this information upon receipt of an invoice from Assessor Collector.

MISCELLANEOUS PROVISIONS

Taxing Entity shall take all necessary steps in order to have Taxing Entity listed and coded by the appraisal district(s) as a Taxing Entity with defined jurisdictional boundaries in addition to causing all necessary tax rolls and listings of taxable properties in Taxing Entity to be prepared. Such records shall include all tax records, tax rolls and such other Taxing Entity tax records maintained or held by Taxing Entity or the appraisal district(s) In an effort to lessen the likelihood of errors, the parties agree to submit all inquiries, correspondence, and requests for research or information in writing.

Assessor Collector shall promptly furnish such information as is reasonably required to assist the Taxing Entity in the preparation of its budget and tax rates.

Upon request, Assessor Collector shall provide a computer printout of the annual master tax roll of Taxing Entity showing all current and delinquent taxes owing by parcel number.

Upon request, Assessor Collector shall furnish a monthly report showing the total amount of tax, penalty and interest due on delinquent parcels by parcel number.

Upon request, Assessor Collector shall provide Taxing Entity with its best estimate of current, delinquent, and total collection rates for the current or an upcoming year.

Assessor Collector shall provide or make available for inspection any other information it has which affects the collection of Taxing Entity's taxes upon the request of Taxing Entity for the purpose of administration, auditing, reporting or any such legitimate business purpose.

Taxing Entity shall not make any claim for damages against Galveston County, its elected and appointed officials and employees as a result of any mistake or error in tax collection efforts for Taxing entity save and except for any acts of fraud, theft or malfeasance

DELINQUENT TAX ATTORNEY

Taxing Entity retains the exclusive authority to hire its own legal counsel to represent it to enforce collection of delinquent taxes, as provided by Property Tax Code Section 6.30 (b) The County and/or Assessor-Collector shall cooperate with the delinquent tax collection

attorney so designated, and shall deduct from the monies to be tendered to the Taxing Entity such fees as are earned by said attorney pursuant to said contract as provided by Section 6.30 of the Property Tax Code, for the collection of delinquent taxes.

This Interlocal Tax Collector Agreement is signed and made effective this 21st day of August, 2012.

County of Galveston

Mark Henry, County Judge

Attest:

Dwight Sullivan, County Clerk

Water Control Improvement District #12

Linda Merryman, President

Attest:

Board Secretary

Cheryl E. Johnson, RTA
County Tax Assessor Collector

AGENDA ITEM #33a

Galveston County, Texas
Consideration of Budget Amendments for
Tuesday, August 21, 2012
As Submitted by the Budget Officer

Fiscal Year	Amendment #	Description
2012	12-068-0821-A	**Engineering Office** – Request to transfer budget from the Emergency Management Fund - Budgeted Reserve to Disaster Recovery Fund – Hurricane Ike-Contract Services to cover contract for lowest bid on the Fort Travis Gravel Roadway and Seawall Walkway.
2012	12-069-0821-B	**Unlimited Tax Road Bonds, Series 2009A-** Request to transfer budget from Stewart Road Re-aligned, 7 Mile Re-aligned, and Avenue H to Stewart Road – Cove View to 7 Mile to cover lowest bid on Stewart Road-Cove View to 7 Mile Road Project. Also included in this budget amendment is the recognition and appropriation of the City of Galveston's contribution.
2012	12-070-0821-C	**Sheriff's Office/Communications** – Request to transfer budget from Budgeted Reserve to Capitalized Furniture, Fixtures, and Equipment in order to purchase a paging transmitter.
2012	12-071-0821-D	**Information Technology** – Request to transfer budget from Budgeted Reserve to Information Technology – Contract Services to cover expenditures with Net Sales Direct through the end of FY2012.

Approved by: _____ Date: 8/15/2012

Mel Trammell, Director of
Finance and Administration

AGENDA ITEM #33aA

COUNTY OF GALVESTON
REQUEST FOR BUDGET AMENDMENT/TRANSFER

Department	Engineering Office	Amendment No 12-068-0821-A
Date Submitted	August 8, 2012	(Assigned by Budget Office)

COMMISSIONER'S COURT ACTION
Please complete the following form in its entirety and submit to the Budget Office at least eleven (11) days prior to the first regularly scheduled Tuesday Commissioners Court meeting date each month Emergency amendments will be processed at the earliest available Court meeting date If information on this form is incomplete, the amendment will be returned to your office for completion It is suggested that the department requesting the amendment be present on the date of its submittal to the Court for action

THIS PORTION MUST BE FILLED OUT

GENERAL EXPLANATION
Request to transfer budget from Emergency Management Fund - Budgeted Reserve to Disaster Recovery - Hurricane Ike Fund - Contract Services to cover contract for lowest bid - Fort Travis Gravel Roadway and Seawall Walkway These funds are to be repaid as soon as funds for this project are received from FEMA

This budget amendment does increase the budget for FY 2012

Transfer FROM	Account Description	Amount Annualized	*Auditor Use Only* Acct Balance Sufficient? (Y/N)
Acct No Emergency Management Fund 2260-920180-5930000	Line Item Budgeted Reserve	361,100	—
TOTAL - Transfer Amount		$361,100	

Transfer TO	Account Description	Amount Annualized	*Auditor Use Only* Acct Balance Sufficient? (Y/N)
Acct No Disaster Recovery - Hurricane Ike Fund 2994-299761-5481000	Line Item Contract Services	361,100	—
TOTAL - Transfer Amount		$361,100	

ADDITIONAL COMMENTS
This budget request is to transfer budget from Emergency Management Fund - Budgeted Reserve to Disaster Recovery - Hurricane Ike - Contract Services to cover the contract for the lowest bid on the Fort Travis - Gravel Roadway and Seawall Walkway This contract to Charnock and Company Inc was approved by Commissioners' Court on July 24, 2012 These funds are to be repaid to the Emergency Management Fund as soon as the funds for this project are received from FEMA

	Fort Travis Park Gravel Roadway and Seawall Walkway	Budgeted Reserve
Beginning Balance	$0	$1,886,983
Original FEMA Project - JKF-032G	1,163,175	
Hazard Mitigation Proposal	35,736	
Budget Amendment - BA 12-068-0821-A	361,096	-$361,096
Expenditures and encumbrances to date	244,470	
Lowest Bid Contract - Charnock and Company Inc	1,289,742	
Contingency	25,795	
Balance upon approval	$0	$1,525,887

Departmental Authorization Date

N/A Date
Human Resources Department

8/15/2012
Budget Office Authorization Date

AUDITOR'S REVIEW
This budget amendment has been reviewed for validity of accounts and sufficiency of account balances used for budget transfer

Reviewed by _____ Date _____

Auditor's Remarks

COMMISSIONERS COURT APPROVAL

Date Submitted _____ Date Approved 8/21/12

AGENDA ITEM #33aB

COUNTY OF GALVESTON
REQUEST FOR BUDGET AMENDMENT/TRANSFER

Department:	Unlimited Tax Road Bonds, Series 2009A	Amendment No 12-069-0821-B
Date Submitted:	August 10, 2012	(Assigned by Budget Office)

COMMISSIONER'S COURT ACTION:
Please complete the following form in its entirety and submit to the Budget Office at least eleven (11) days prior to the first regularly scheduled Tuesday Commissioners Court meeting date each month. Emergency amendments will be processed at the earliest available Court meeting date. If information on this form is incomplete, the amendment will be returned to your office for completion. It is suggested that the department requesting the amendment be present on the date of its submittal to the Court for action.

THIS PORTION MUST BE FILLED OUT

GENERAL EXPLANATION:

Request to transfer budget from Stewart Road Re-Aligned, 7 Mile Re-Aligned, and Ave H to Stewart Road - Cove View to 7 Mile to cover lowest bid on Stewart Road - Cove View to 7 Mile Road Project Also included in this budget amendment is the recognition and appropriation of the City of Galveston's contribution .

This budget amendment does increase the budget for FY 2012.

Transfer FROM	Account Description	Amount Annualized	*Auditor Use Only* Acct Balance Sufficient? (Y/N)
Acct. No. Unlimited Tax Road Bonds, Series 2009A	Line Item:		___
3312-312111-5731134	Stewart Road Re-aligned	658,457	
3312-312111-5731135	7 Mile Road Re-aligned	576,304	
3312-312111-5731136	Avenue H	448,849	
3312-000000-4301011	Contribution - City of Galveston	952,417	
TOTAL - Transfer Amount		2,636,027	

Transfer TO	Account Description	Amount Annualized	*Auditor Use Only* Acct Balance Sufficient? (Y/N)
Acct. No. Unlimited Tax Road Bonds, Series 2009A	Line Item:		___
3312-312111-5731133	Stewart Road Cove View to 7 Mile	2,636,027	
TOTAL - Transfer Amount		$2,636,027	

ADDITIONAL COMMENTS:
This is a budget request to transfer budget from various projects which include Stewart Road Re-aligned, 7 Mile Road Re-aligned, and Avenue H to one project, Stewart Road - Cove View to 7 Mile Road. Also, this budget amendment includes recognition and appropriation of the City of Galveston' s contribution. This contract is to be submitted for approval at Commissioners' Court on August 21, 2012.

	Stewart Road Cove View to 7 Mile Road	Stewart Road Re-aligned	7 Mile Road Re-aligned	Avenue H Project
Beginning Balance as of 8/1/2012	$1,271,701	$870,737	$690,931	$685,306
Budget Amendment - BA 12-069-0821-B	1,683,610	-658,457	-576,304	-448,849
Budget Amendment - BA 12-069-0821-B - City of Galveston Contribution	952,417			
Total expenditures and encumbrances to date	319,177	212,280	114,627	36,223
Balance upon approval	$3,588,551	$0	$0	$200,234

G. M. Fitzgerald 8/15/12
Departmental Authorization Date

N/A Date
Human Resources Department

8/15/2012
Budget Office Authorization Date

AUDITOR'S REVIEW

This budget amendment has been reviewed for validity of accounts and sufficiency of account balances used for budget transfer.

Reviewed by: _____ Date _____

Auditor's Remarks:

COMMISSIONERS COURT APPROVAL

Date Submitted _____ Date Approved: 8/21/12

COUNTY OF GALVESTON
REQUEST FOR BUDGET AMENDMENT/TRANSFER

Department	Unlimited Tax Road Bonds, Series 2009A	Amendment No 12-069-0821-B
Date Submitted	August 10, 2012	(Assigned by Budget Office)

COMMISSIONER'S COURT ACTION

Please complete the following form in its entirety and submit to the Budget Office at least eleven (11) days prior to the first regularly scheduled Tuesday Commissioners Court meeting date each month Emergency amendments will be processed at the earliest available Court meeting date If information on this form is incomplete, the amendment will be returned to your office for completion It is suggested that the department requesting the amendment be present on the date of its submittal to the Court for action

THIS PORTION MUST BE FILLED OUT

GENERAL EXPLANATION

Request to transfer budget from Stewart Road Re-Aligned, 7 Mile Re-Aligned, and Ave H to Stewart Road - Cove View to 7 Mile to cover lowest bid on Stewart Road - Cove View to 7 Mile Road Project Also included in this budget amendment is the recognition and appropriation of the City of Galveston's contribution

This budget amendment does increase the budget for FY 2012

Transfer FROM	Account Description	Amount Annualized	*Auditor Use Only* Acct Balance Sufficient? (Y/N)
Acct. No Unlimited Tax Road Bonds, Series 2009A	Line Item		___
3312-312111-5731134	Stewart Road Re-aligned	658,457	
3312-312111-5731135	7 Mile Road Re-aligned	576,304	
3312-312111-5731136	Avenue H	448,849	
3312-000000-4301011	Contribution - City of Galveston	952,417	
TOTAL - Transfer Amount		2,636,027	

Transfer TO	Account Description	Amount Annualized	*Auditor Use Only* Acct Balance Sufficient? (Y/N)
Acct No Unlimited Tax Road Bonds, Series 2009A	Line Item:		___
3312-312111-5731133	Stewart Road Cove View to 7 Mile	2,636,027	
TOTAL - Transfer Amount		$2,636,027	

ADDITIONAL COMMENTS

This is a budget request to transfer budget from various projects which include Stewart Road Re-aligned, 7 Mile Road Re-aligned, and Avenue H to one project, Stewart Road - Cove View to 7 Mile Road Also, this budget amendment includes recognition and appropriation of the City of Galveston' s contribution This contract is to be submitted for approval at Commissioners' Court on August 21, 2012

	Stewart Road Cove View to 7 Mile Road	Stewart Road Re-aligned	7 Mile Road Re-aligned	Avenue H Project
Beginning Balance as of 8/1/2012	$1,271,701	$870,737	$690,931	$685,306
Budget Amendment - BA 12-069-0821-B	1,683,610	-658,457	-576,304	-448,849
Budget Amendment - BA 12-069-0821-B - City of Galveston Contribution	952,417			
Total expenditures and encumbrances to date	319,177	212,280	114,627	36,223
Balance upon approval	$3,588,551	$0	$0	$200,234

Departmental Authorization Date

N/A Date
Human Resources Department

8/10/2012
Budget Office Authorization Date

AUDITOR'S REVIEW

This budget amendment has been reviewed for validity of accounts and sufficiency of account balances used for budget transfer

Reviewed by _____ Date _____

Auditor's Remarks

COMMISSIONERS COURT APPROVAL

Date Submitted _____ Date Approved _____

AGENDA ITEM #33aC

COUNTY OF GALVESTON

REQUEST FOR BUDGET AMENDMENT/TRANSFER

Department:	Sheriff's Office/Communications	Amendment No. 12-070-0821-C
Date Submitted:	August 8, 2012	(Assigned by Budget Office)

COMMISSIONER'S COURT ACTION:
Please complete the following form in its entirety and submit to the Budget Office at least eleven (11) days prior to the first regularly scheduled Tuesday Commissioners Court meeting date each month. Emergency amendments will be processed at the earliest available Court meeting date. If information on this form is incomplete, the amendment will be returned to your office for completion. It is suggested that the department requesting the amendment be present on the date of its submittal to the Court for action.

THIS PORTION MUST BE FILLED OUT

GENERAL EXPLANATION:
Request to transfer budget from Budgeted Reserve to Sheriff/Communications - Capitalized Furniture, Fixtures and Equipment in order to purchase a paging transmitter for Galveston County

This budget amendment does not increase the budget for FY 2012.

Transfer FROM	Account Description	Amount Annualized	Auditor Use Only Acct Balance Sufficient? (Y/N)
Acct. No: General Fund 1101-920180-5930000	Line Item: Budgeted Reserve	10,000	—
TOTAL - Transfer Amount		$10,000	

Transfer TO	Account Description	Amount Annualized	Auditor Use Only Acct Balance Sufficient? (Y/N)
Acct. No: General Fund 1101-211171-5746010	Line Item: Capitalized Furniture, Fixtures and Equipment	10,000	—
TOTAL - Transfer Amount		$10,000	

ADDITIONAL COMMENTS:
This budget request is to transfer budget from Budgeted Reserves to Sheriff/Communications Capitalized Furniture, Fixtures, and Equipment in order to purchase a paging transmitter for Galveston County. Bacliff and San Leon Fire Departments are to reimburse Galveston County for their part of this purchase.

	Budgeted Reserve	Capitalized Furniture, Fixtures and Equipment
Beginning Balance, August 8, 2012	$18,967,200	$0
Budget Amendment - BA 12-070-0821-C	-10,000	10,000
Expenditures and encumbrances to date	0	0
Balance upon approval	$18,957,200	$10,000

8/15/12
Departmental Authorization — Date

N/A — Date
Human Resources Department

8/15/2012
Budget Office Authorization — Date

AUDITOR'S REVIEW

This budget amendment has been reviewed for validity of accounts and sufficiency of account balances used for budget transfer.

Reviewed by: _____ Date: _____

Auditor's Remarks:

COMMISSIONERS COURT APPROVAL

Date Submitted: _____ Date Approved: 8/21/12

COUNTY OF GALVESTON

REQUEST FOR BUDGET AMENDMENT/TRANSFER

Department	Sheriff's Office/Communications	Amendment No 12-070-0821-C
Date Submitted	August 8, 2012	(Assigned by Budget Office)

COMMISSIONER'S COURT ACTION

Please complete the following form in its entirety and submit to the Budget Office at least eleven (11) days prior to the first regularly scheduled Tuesday Commissioners Court meeting date each month Emergency amendments will be processed at the earliest available Court meeting date If information on this form is incomplete, the amendment will be returned to your office for completion It is suggested that the department requesting the amendment be present on the date of its submittal to the Court for action

THIS PORTION MUST BE FILLED OUT

GENERAL EXPLANATION

Request to transfer budget from Budgeted Reserve to Sheriff/Communications - Capitalized Furniture, Fixtures and Equipment in order to purchase a paging transmitter for Galveston County

This budget amendment does not increase the budget for FY 2012

Transfer FROM	Account Description	Amount Annualized	*Auditor Use Only* Acct Balance Sufficient? (Y/N)
Acct No General Fund 1101-920180-5930000	Line Item Budgeted Reserve	10,000	___
TOTAL - Transfer Amount		$10,000	

Transfer TO	Account Description	Amount Annualized	*Auditor Use Only* Acct Balance Sufficient? (Y/N)
Acct No General Fund 1101-211171-5746010	Line Item Capitalized Furniture, Fixtures and Equipment	10,000	___
TOTAL - Transfer Amount		$10,000	

ADDITIONAL COMMENTS

This budget request is to transfer budget from Budgeted Reserves to Sheriff/Communications Capitalized Furniture, Fixtures, and Equipment in order to purchase a paging transmitter for Galveston County Bailiff and San Leon Fire Departments are to reimburse Galveston County for their part of this purchase

	Budgeted Reserve	Capitalized Furniture, Fixtures and Equipment
Beginning Balance, August 8, 2012	$18,967,200	$0
Budget Amendment - BA 12-070-0821-C	-10,000	10,000
Expenditures and encumbrances to date	0	0
Balance upon approval	$18,957,200	$10,000

Departmental Authorization Date

N/A Date
Human Resources Department

8/15/2012
Budget Office Authorization Date

AUDITOR'S REVIEW

This budget amendment has been reviewed for validity of accounts and sufficiency of account balances used for budget transfer

Reviewed by _____ Date _____

Auditor's Remarks

COMMISSIONERS COURT APPROVAL

Date Submitted _____ Date Approved _____

AGENDA ITEM #33aD

COUNTY OF GALVESTON

REQUEST FOR BUDGET AMENDMENT/TRANSFER

Department	Information Technology	Amendment No 12-071-0821-D
Date Submitted	August 15, 2012	(Assigned by Budget Office)

COMMISSIONER'S COURT ACTION

Please complete the following form in its entirety and submit to the Budget Office at least eleven (11) days prior to the first regularly scheduled Tuesday Commissioners Court meeting date each month. Emergency amendments will be processed at the earliest available Court meeting date If information on this form is incomplete, the amendment will be returned to your office for completion It is suggested that the department requesting the amendment be present on the date of its submittal to the Court for action

THIS PORTION MUST BE FILLED OUT

GENERAL EXPLANATION

Request to transfer budget from Budgeted Reserve to Information Technology - Contract Services in order to cover expenditures for Net Sales Direct to cover expenditures through the end of FY 2012

This budget amendment does not increase the budget for FY 2012

Transfer FROM	Account Description	Amount Annualized	*Auditor Use Only* Acct Balance Sufficient? (Y/N)
Acct No General Fund 1101-920180-5930000	Line Item Budgeted Reserve	100,000	—
TOTAL - Transfer Amount		$100,000	

Transfer TO	Account Description	Amount Annualized	*Auditor Use Only* Acct Balance Sufficient? (Y/N)
Acct No General Fund 1101-159100-5481000	Line Item Contract Services	100,000	—
TOTAL - Transfer Amount		$100,000	

ADDITIONAL COMMENTS

This budget request is to transfer budget from Budgeted Reserve to Information Technology - Contract Services in order to cover expenditures with Net Sales Direct through FY2012

Total expenditures and encumbrance to date for Net Sales Direct are $500,000

	Budgeted Reserve	Contract Services
Beginning Balance, August 8, 2012	$18,967,200	$780,900
Budget Amendment - BA 12-070-0821-C	-10,000	0
Budget Amendment - BA 12-071-0821-D	-100,000	100,000
Expenditures and encumbrances to date	0	719,797
Balance upon approval	$18,857,200	$161,103

Departmental Authorization Date

N/A Date

Human Resources Department

8/18/2012

Budget Office Authorization Date

AUDITOR'S REVIEW

This budget amendment has been reviewed for validity of accounts and sufficiency of account balances used for budget transfer

Reviewed by _____ Date _____

Auditor's Remarks

COMMISSIONERS COURT APPROVAL

Date Submitted _____ Date Approved 8/21/12

AGENDA ITEM #33b

Form 9-4 Construction Contract Change Order Approval Request

Owner (Contractor Locality) Galveston County (Name & Address) Galveston County Courthouse 722 Moody Avenue, 5th Floor Galveston, TX 77550 Phone # 409-770-5374	Contract For (project description) Permanent Emergency Generators for Facilities to serve Galveston County WCID No 19 Bayview MUD Bacliff MUD San Leon MUD	Date April 2, 2012 Project No P00509
Contractor Stonewall Constructors (Name & Address) 13011 Mula Lane Stafford TX 77025 Agreement Date 2/14/2011 Phone # 713-660-8334	Engineer LJA Engineering, Inc (Name & Address) 2929 Briarpark Drive, Suite 600 Houston, TX 77042 Phone # 713-953-5061 Engineer's Project No 0384-9003C	DR Contract No DRS010052 Change Order No 2

You are hereby requested to comply with the following changes from the contract plans and specifications

Item No	Description of Changes-Quantities, Units, Unit Prices, Change in Completion Scheduled, Etc	Decrease in Contract Price	Increase in Contract Price
1	Provide and install two (2) Soft Starters in a Nema 4x Stainless Steel Enclosure	+	$13,810 72
2			
3			

Change in Contract Price	Change in Contract Time
+$13,810 72	178 Days

Original Contract Price	$ 781,818 25	Original Contract Time	150 days
Previous Change Order(s) No to No	$ 80,116 44	Net Change From Previous Change Orders	+ 145 days
Contract Price Prior to this Change Order	$ 861,934 69	Contract Time Prior to this Change Order	295 days
Net Increase/Decrease of this Change Order	+ $ 13,810 72	Net Increase/Decrease of this Change Order	+ 178 days
Contract Price With all Approved Change Orders	$ 875,745 41	Contract Time With all Approved Change Orders	473 days
Cumulative % Change in Contract Price % 12 0 %			

DR Division reimbursement of costs approved by this change order is subject to approval by TDRA

RECOMMENDED	APPROVED	ACCEPTED
By	By	By
ENGINEER (Authorized Signature)	OWNER (Authorized Signature)	CONTRACTOR (Authorized Signature)
Date 4/11/2012	Date 8/21/12	Date 4/11/2012

Grantee	Galveston County
DRS Contract No	DRS010052
Change Order No	2

JUSTIFICATION FOR CHANGE

1 Will this Change Order increase or decrease the number of beneficiaries? ☐ Increase ☐ Decrease ☑ No Change

If there is a change, how many beneficiaries will be affected? Total ____ L/M ____

2 Effect of this change on scope of work ☐ Increase ☐ Decrease ☑ No Change

3 Effect on operation and maintenance costs ☐ Increase ☐ Decrease ☑ No Change

4 Are all prices in the change order dependent upon unit prices found in the original bid? ☐ Yes ☑ No

If "No", explain

Provide and Install two (2) Soft Starters in Nema 4x Stainless Steel Enclosures for the existing Lift Station Pumps to allow the Generator to successfully start and run the pumps in a power failure

5 Will this change be completed within the contract period? ☐ Yes ☑ No

If "No", expected completion date May 31, 2012

(completion date)

6 Has this change created new circumstances or environmental conditions which may affect the project's impact, such as concealed or unexpected conditions discovered during actual construction? ☐ Yes ☑ No

If "Yes", is an Environmental Re-assessment required? ☐ Yes ☑ No

AGENDA ITEM #33c

RESOLUTION DESIGNATING SIGNATORIES FOR GLO DISASTER RECOVERY PROGRAM GRANT

On this the 21st day of August, 2012, the Commissioners Court of Galveston County, Texas, convened in a regularly scheduled session with the following members thereof present:

Mark Henry, County Judge;
Patrick Doyle, Commissioner, Precinct 1;
Kevin O'Brien, Commissioner, Precinct 2;
Stephen D. Holmes, Commissioner, Precinct 3;
Kenneth D. Clark, Commissioner, Precinct 4; and,
Dwight D. Sullivan, County Clerk

when the following proceedings, among others were had, to-wit:

The County has received funding through the Disaster Recovery Program Fund, administered by the General Land Office of Texas, for various infrastructure projects; and

It is necessary to designate signatories for contractual documents pertaining to this grant.

Now, therefore, be it resolved by the County of Galveston, Texas:

That the Commissioners' Court designates the County Judge, County Auditor, Finance Director and CDBG Project Coordinator as authorized signatories for State of Texas purchase vouchers for the Disaster Recovery Program grant;

That the Commissioners' Court designates the County Judge, County Auditor, Finance Director and CDBG Project Coordinator as authorized signatories for requests for advance or reimbursement for the Disaster Recovery Program grant; and,

That the Commissioners' Court directs and designates the County Judge, as the County's Chief Executive Officer and authorized representative, to act in all matters in connection with this grant project.

UPON MOTION DULY MAD AND SECONDED, the above Resolution was passed on this the 21st day of August 2012.

THE COUNTY OF GALVESTON, TEXAS

MARK HENRY
County Judge

PATRICK DOYLE
Commissioner, Precinct 1

KEVIN O'BRIEN
Commissioner, Precinct 2

STEPHEN D. HOLMES
Commissioner, Precinct 3

KENNETH D. CLARK
Commissioner, Precinct 4

ATTEST:

DWIGHT D. SULLIVAN
County Clerk

By Brandy Chapman
Brandy Chapman, Deputy

Texas General Land Office - Disaster Recovery

Depository/Authorized Signatories Designation Form (Revised: 7/11/12)

Grantee/Contractor Galveston County GLO-DR Contract No 10-5052-000-5028

DRS Grant No DRS010052

The financial lending institution listed here will serve as the depository for the Texas General Land Office-Disaster Recovery Program Community Development Block Grant (CDBG) funds

Prosperity Bank
(Name of Lending Institution)

2424 Market Street
(Address)

Galveston, Texas 77550
(City, State, Zip Code)

Fund Account Number 7,431,431

The individuals below are designated by resolution as authorized signatories for contractual documents – (At least two signatories required)

Mark Henry (Name) County Judge (Title) (Signature)	Nicholas Foster (Name) CDBG Project Coordinator (Title) (Signature)
Cliff Billingsley (Name) County Auditor (Title) (Signature)	Mel Trammell (Name) Director of Finance (Title) (Signature)

NOTE: A copy of a Resolution passed by the city council or county commissioner's court authorizing the signatories must be submitted along with this form

AGENDA ITEM #33d

NO

BACK – UP

PROVIDED

AGENDA ITEM #33e

NO

BACK – UP

PROVIDED

AGENDA ITEM #33f

Galveston County Commissioners' Court
2012 Notice of Public Hearing
District Clerk's Records Archive Fee

Notice is hereby given that on the following date and time the Commissioners' Court will consider adoption of the plan developed by the Honorable Doryn Danner Glenn, District Clerk of Galveston County, for funding the preservation and restoration services performed by her in connection with maintaining the District Clerk's records archive

Date of Hearing	August 21, 2012
Time of Hearing:	9 30 a m
Location of Hearing	Commissioners' Court Galveston County Courthouse 722 Moody, 1st Floor Galveston, Texas 77550

A copy of the plan may be reviewed in advance of the hearing by contacting the following person

Honorable Doryn Danner Glenn
District Clerk of Galveston County
Galveston County Justice Administration Building
600 59th Street, Suite 4001
Galveston, Texas 77551
(409) 766-2424

Any individual desiring to address the Commissioners' Court is invited to attend the public hearing and to speak in favor of or against the plan

After the public hearing the plan shall be considered for approval by the Commissioners' Court

Galveston County Commissioners' Court

By Mark A Henry
County Judge

July 27, 2012

Galveston County, The Daily News
8522 Teichman Road
Galveston, Texas 77554

Re Publication of Notice of Public Hearing for District Clerk's Records Archive Fee
Purchase Order #_____

Dear Sir or Madam

Enclosed please find a Notice to be published in the Legal Section of the newspaper

Please publish this Notice on August 6, 2012

Once publication has been completed please return to me your executed Affidavit of Publication In addition, please send me your invoice for publication at which time it will be processed for payment

Thanking you for your usual courtesies in this matter, I am,

Very truly yours,

Doryn Glenn
District Clerk

Depts/district clerk/district clerk's record archive 2012

A F F I D A V I T

Attachment

County of Galveston §
§
State of Texas §

Before me, the undersigned authority, on this day personally came and appeared **Sandra Villamil**, to me well known (or proved to me on the basis of satisfactory evidence), and who after being duly sworn (affirmed) did depose and say that she is an **AGENT** for **THE GALVESTON COUNTY DAILY NEWS**, a newspaper of general circulation, which has been continuously and regularly published for a period of not less than one year, in the County of Galveston, and that the **NOTICE**, a copy of which is hereto attached was published in said newspaper on the following days, to wit·

August 06, 2012

Sandra Villamil
Agent Signature

Sworn and subscribed before me

On this the 16th day of August, 2012

Melanie Perry
Notary for the State of Texas

Melanie Perry
Notary Public State of Texas
My Commission Expires
8-2-2014

Galveston County Commissioners' Court
2012 Notice of Public Hearing
District Clerk's Records Archive Fee

Notice is hereby given that on the following date and time the Commissioners' Court will consider adoption of the plan developed by the Honorable Doryn Danner Glenn District Clerk of Galveston County, for funding the preservation and restoration services performed by her in connection with maintaining the District Clerk's records archive

Date of Hearing August 21 2012
Time of Hearing 9 30 *a m*
Location of Hearing Commissioners' Court
Galveston County Courthouse
722 Moody 1st Floor
Galveston Texas 77550

A copy of the plan may be reviewed in advance of the hearing by contacting the following person

Honorable Doryn Danner Glenn
Distnct Clerk of Galveston County
Galveston County Justice Administration Building
600 59th Street, Suite 4001
Galveston Texas 77551
(409) 766-2424

Any individual desiring to address the Commissioners' Court is invited to attend the public hearing and to speak in favor of or against the plan

After the public hearing the plan shall be considered for approval by the Commissioners' Court

Galveston County Commissioners' Court
By Mark A Henry
County Judge

Published August 6 2012
00306366

AGENDA ITEM #33g

On this the 21st day of August, 2012, the **Commissioners' Court of Galveston County, Texas** convened in a regularly scheduled meeting with the following members thereof present

Mark Henry, County Judge;
Patrick F. Doyle, Commissioner, Precinct No. 1;
Kevin D. O'Brien, Commissioner, Precinct No. 2;
Stephen D. Holmes, Commissioner, Precinct No. 3;
Kenneth Clark, Commissioner, Precinct No. 4; and
Dwight D. Sullivan, County Clerk

when the following proceedings, among others, were had, to-wit

An Order Adopting the District Clerk's Records Archive Fee under §51.305 of the Texas Government Code

Whereas, pursuant to the authority granted by Texas Government Code §51 305 the Commissioners' Court of Galveston County, Texas may adopt a district clerk's records archive fee as part of the County's annual budget, and

Whereas, this fee is to be used for the preservation and restoration services performed by the District Clerk in connection with maintaining her records archive, and

Whereas, this plan along with the proposed fee was presented to the Commissioners' Court at its meeting held on August 7, 2012, and

Whereas, attached to this Order is the Preservation and Restoration Plan previously presented by the District Clerk, and

Whereas, on August 6, 2012 notice of a public hearing was filed in Galveston County, The Daily News, a newspaper of general circulation in Galveston County, and

Whereas, it is the desire of the Commissioners' Court to adopt a records archive fee of $5 00 to preserve and restore the District Clerk's records

Now, Therefore Be it Ordered as Follows:

1) that pursuant to §51 305 of the Texas Government Code there is hereby adopted as part of the County of Galveston's annual budget a district clerk's records archive fee of $5 00,
2) that this fee be designated for the preservation and restoration services performed by the District Clerk in connection with maintaining her records archive,
3) that collection of this fee shall commence effective October 1, 2012,
4) that this fee has been set and itemized in the County's budget as part of the budget preparation process,

5) that the fee is to be paid at the time a person files a suit, including an appeal from an inferior court, or a cross-action, counterclaim, intervention, contempt action, motion for new trial, or third-party petition with the District Clerk,
6) that the fund generated from the collection of fees under this Order may be expended only for the preservation and restoration of the District Clerk's records archive in accordance with the terms of her Annual Archive Fee Plan,
7) that the plan presented to this Court on August 7, 2012 be approved
8) that the District Clerk post in a conspicuous area of her office a notice that reads in all capital letters "The Commissioners Court of Galveston County has determined that a records archive fee of $5 00 is needed to preserve and restore district court records"
9) that any excess funds, if any, generated from the collection of this fee remaining after completion of the district court records archive preservation and restoration project may be expended records management and preservation purposes in the manner provided by Texas Government Code §51 317(d)
10) that this Order Setting the Fee, the District Clerk's Plan and the Court's Approval of the Plan will be adopted annually

Upon Motion Duly Made and Seconded the above Order was unanimously passed this the 21st day of August, 2012

County of Galveston, Texas

By: Mark A. Henry
Mark A. Henry
County Judge

Attest:

Dwight D. Sullivan
County Clerk

By: Brandy Chapman **Deputy**
Brandy Chapman

BY ORDER DATED AUGUST 21, 2012 THE COMMISSIONERS' COURT OF GALVESTON COUNTY HAS DETERMINED THAT A RECORDS ARCHIVE FEE OF $5.00 IS NEEDED TO PRESERVE AND RESTORE THE DISTRICT CLERK'S RECORDS.

THIS ORDER BECOMES EFFECTIVE OCTOBER 1, 2012.

DORYN DANNER GLENN
GALVESTON COUNTY DISTRICT CLERK
FISCAL YEAR 2013 RECORDS PRESERVATION AND RESTORATION PLAN

The 81st Legislature authorized Commissioners Court to adopt a district court records archive fee of not more than $5.00 (Government Code 51.305(b)) for the filing of a suit, including an appeal from an inferior court, or cross action, counterclaim, intervention, contempt action, motion for new trial, or third party petition, in a district court. The District Clerk is requesting approval of a $5 00 records archive fee. The generated fees are to be deposited into the district court records technology fund (Government Code 51.317(f)). Fees imposed under this plan do not apply to a filing by a state agency. Moreover the legislature requires the District Clerk to prepare an annual written plan to be approved by Commissioners Court, for the preservation and restoration of the District Clerk court records archive

The Galveston County District Clerk, as Records keeper for the judicial case records of the District Courts and County Courts at Law, has responsibility for filing, maintaining, storing, and making available millions of judicial case records filed with the office. The District Clerk has the statutory duty to make these records available to the public if requested.

The District Clerk maintains records in the following forms: paper, microfilm, bound books, and digitized in the Odyssey case management system. The District Clerk designates the following case types and documents associated (e.g. jury Subpoenas, depositions, bond forfeiture) with the case types as the records archive.

I. **Civil and Tax Courts**
   A. Pre 1920
      1 Civil Court records, docket sheets, and indexes (1832-1920)-Permanent Retention
      2. Civil Court Minute Books (1832-1920)-Permanent Retention
      3. Execution Docket Books (1832-1920)-Permanent Retention
      4 Executions and Orders of Sale (1832-1920)-Permanent Retention
      5. Tax Court Minute Books (1832-1920)-Permanent Retention
   B Post 1920
      1 Civil records, docket sheets, and indexes (Retain per Texas State Library schedule)
      2 Civil Court Minute Books (Retain per Texas State Library schedule)
      3 Execution Docket Books (Retain per Texas State Library schedule)
      4 Executions and Orders of Sale (Retain per Texas State Library schedule)
      5. Tax Court Minute Books (Retain per Texas State Library schedule)

II. Criminal Courts

A Pre 1920

1 Criminal Court records, docket sheets, and indexes (1832-1936) Permanent Retention

2. Criminal Court Minute Books (1832-1920)-Permanent Retention

B. Post 1920

1 Criminal Court records. docket sheets, and indexes (Retain per Texas State Library schedule)

2 Criminal Court Minute Books (Retain per Texas State Library schedule)

III. Family Courts

A. Pre 1920

1 Family Court Case Files: (adoptions, community property management petitions Name change petitions, paternity suits, divorce, voluntary legitimating petitions and statements, terminations, suits affecting parent child relationship) (1832-1920)-Permanent Retention.

2. Family Court Dockets (1832-1920)-Permanent Retention

3. Family Court Indexes (1832-1920)-Permanent Retention

4. Family Court Minute Books (1832-1957)-Permanent Retention

B. Post 1920

1. Family Court Case Files: (adoptions, community property management petitions. name change petitions, paternity suits, divorce, voluntary legitimating petitions and statements, terminations, suit affecting parent child relationship, children protective service) (Retain per Texas State Library schedule).

2 Family Court Dockets (Retain per Texas State Library schedule)

3 Family Court Indexes (Retain per Texas State Library schedule)

4. Family Court Minute Books (Retain per Texas State Library schedule)

IV. Juvenile Court

A Pre 1920

1 Juvenile Case Files (Adoption, Paternity suits, name change petitions, voluntary legitimating petitions and statements, terminations, suits affecting parent child relationship, child protective service, children in need of supervision) (1832-1920)-Permanent Retention

2. Juvenile Court Dockets (1832-1920)-Permanent Retention

3 Juvenile Court Minute Books (1832-1920)-Permanent Retention

4 Juvenile Court Indexes (1832-1920)-Permanent Retention

B Post 1920

1. Juvenile Case Files (Adoption, Paternity suits, name change petitions, voluntary legitimating petitions and statements, terminations, suits affecting parent child relationship, child protective service, children in need of supervision) (Retain per Texas State Library schedule)

2 Juvenile Court Dockets (Retain per Texas State Library)

3. Juvenile Court Minute Books (Retain per Texas State Library schedule)

4 Juvenile Court Indexes (Retain per Texas State Library schedule)

V. Immigration Records

A. 1832-1957 (Retention Permanent)

VI. Inquests

1. 1836-1920 (Retention Permanent)
2 Post 1920 (Retain per Texas State Library schedule)

Preservation and Restoration Plan Strategies: The District Clerk shall use the technology fund and all other available resources to accomplish the following.

1. Continue developing technological strategies and implementing processes that reduce or eliminate the need for paper retention, additional storage space, and to enable digital records to be easily accessed electronically;
2. Convert restored and preserved records to a digital image, as funds become available,
3. Restore and preserve records in the date range 1832-1920 in paper format permanently;
4 Determine if contracting with a private vendor to convert paper records to a digital image is more cost effective than performing the task in-house;
5. Continue to develop the skill level of District Clerk personnel in the utilization and applications of Odyssey
6. Immigration records restored and preserved as funds become available.
7. Digitize all post 1920 case files and documents as funds become available.

In July 2010, Galveston County converted to a new case management system, Odyssey At that time and going forward, all Civil and Family case records are imaged and evented into Odyssey at the time of filing Those records are available on-line. The criminal conversion to Odyssey is scheduled for March 2012

In February 2011, the District Clerk requested and Commissioners Court approved a "back-scanning" project to scan and event pending case records filed prior to July 17, 2010 that were not included in the initial Odyssey conversion of Civil and Family cases. The plan has been very successful; ahead of schedule, digitizing more than 1500 Civil, Family and Tax case records that are now available online We anticipate expanding the scope of the back-scanning project to encompass all remaining Civil, Family, Tax, and Criminal pending case records.

As we continue to digitize the back-file of case papers; expanding the number of digitized records, network infrastructure and memory need to expand to sustain the growth and evolution of technologies There is an ever growing expectation to file, manage, and access judicial records electronically

As a part of our overall strategy to reduce the level of paper records, we anticipate implementing and accepting the electronic filing of court documents through Texas gov. A critical component of the District Clerk accepting electronic filing through Texas.gov requires the technical resource to establish and maintain a secure web service connection. We have requested Galveston County Information Technology Department to provide this service to the District Clerk to enable us to move forward with our plan to begin electronic filing through Texas.gov. We also urge Tyler Technologies to continue working on technological solutions to enable the electronic filing through Texas.gov to interface with Odyssey.

As provided by Section 51 305 Government Code (Senate Bill 1685), the District Clerk is hereby submitting his annual written plan to Commissioners Court for the collection of the Records Archive Fee ($5.00) to be deposited into the District Court Records Technology Fund.

_____

DORYN DANNER GLENN
GALVESTON COUNTY DISTRICT CLERK

AGENDA ITEM #33h

Galveston County Commissioners' Court
2011 Notice of Public Hearing
County Clerk's Records Archive Fee

Notice is hereby given that on the following date and time the Commissioners' Court will consider adoption of the plan developed by the Honorable Dwight D Sullivan, County Clerk of Galveston County for funding the preservation and restoration services performed by him in connection with maintaining the County Clerk's records archive

Date of Hearing	August 21, 2012
Time of Hearing	9 30 a m
Location of Hearing:	Commissioners' Court Galveston County Courthouse 722 Moody, 1st floor Galveston, Texas 77550

A copy of the plan may be reviewed in advance of the hearing by contacting the following person

Hon Dwight D Sullivan
County Clerk
Galveston County Courthouse
Galveston, Texas 77550
(409) 766-2200

Any individual desiring to address the Commissioners' Court is invited to attend the public hearing and to speak in favor of or against the plan

After the public hearing the plan shall be considered for approval by the Commissioners' Court

Galveston County Commissioners' Court

By Mark Henry
County Judge

A F F I D A V I T

Attachment

County of Galveston §
§
State of Texas §

Before me, the undersigned authority, on this day personally came and appeared **Sandra Villamil**, to me well known (or proved to me on the basis of satisfactory evidence), and who after being duly sworn (affirmed) did depose and say that she is an **AGENT** for **THE GALVESTON COUNTY DAILY NEWS**, a newspaper of general circulation, which has been continuously and regularly published for a period of not less than one year, in the County of Galveston, and that the **NOTICE**, a copy of which is hereto attached was published in said newspaper on the following days, to wit·

August 17, 2012

Sandra Villamil
Agent Signature

Sworn and subscribed before me

On this the 17th day of August, 2012

Melanie Perry
Notary for the State of Texas

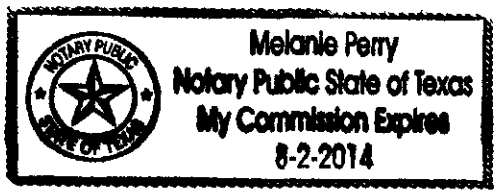

[redacted]

Galveston County Commissioners' Court
2012 Notice of Public Hearing
County Clerk's Records Archive Fee

Notice is hereby given that on the following date and time the Commissioners' Court will consider adoption of the plan developed by the Honorable Dwight D Sullivan County Clerk of Galveston County for funding the preservation and restoration services performed by him in connection with maintaining the County Clerk's records archive

Date of Hearing August 21, 2012
Time of Hearing 9 30 a m
Location of Hearing Commissioners' Court
Galveston County Courthouse
722 Moody 1st floor
Galveston, Texas 77550

A copy of the plan may be reviewed in advance of the hearing by contacting the following person

Hon Dwight D Sullivan
County Clerk
Galveston County Courthouse
Galveston, Texas 77550
(409) 766-2200

Any individual desiring to address the Commissioners' Court is invited to attend the public hearing and to speak in favor of or against the plan

After the public hearing the plan shall be considered for approval by the Commissioners' Court

Galveston County Commissioners' Court
By Mark Henry
County Judge

Published August 17 2012
00308560

AGENDA ITEM #33i

On this the 21st day of August, 2012, the **Commissioners' Court of Galveston County, Texas** convened in a regularly scheduled meeting with the following members thereof present

Mark Henry, County Judge;
Patrick F. Doyle, Commissioner, Precinct No. 1;
Kevin D. O'Brien, Commissioner, Precinct No. 2;
Stephen D. Holmes, Commissioner, Precinct No. 3;
Kenneth Clark, Commissioner, Precinct No. 4; and
Dwight D. Sullivan, County Clerk

when the following proceedings, among others, were had, to-wit

An Order Adopting a County Clerk's Records Archive Fee under §118.025 and §118.011(f) of the Texas Local Government Code

Whereas, pursuant to the authority granted by Texas Local Government Code §118 025 the Commissioners' Court of Galveston County, Texas may adopt a records archive fee under §118 011(f) as part of the County's annual budget, and

Whereas, this fee is to be used for the preservation and restoration services performed by the County Clerk in connection with maintaining his records archive, and

Whereas, attached to this Order is the Preservation and Restoration Plan presented as part of the budget preparation process on August 7, 2012 to the Court by the County Clerk, and

Whereas, on August 6, 2012 notice of a public hearing was filed in Galveston County, The Daily News, a newspaper of general circulation in Galveston County, and

Whereas, it is the desire of the Commissioners' Court to adopt a records archive fee of $5 00 to preserve and restore County records

Now, Therefore Be it Ordered as Follows:

1) that pursuant to §118 011(f) and §118 025 of Texas Local Government Code there is hereby adopted as part of the County of Galveston's annual budget a records archive fee of $5 00,
2) that this fee be designated for the preservation and restoration services performed by the County Clerk in connection with maintaining his records archive,
3) that collection of this fee shall commence effective October 1, 2012,
4) that this fee be set and itemized in the County's budget as part of the budget preparation process,
5) that the fee is to be paid at the time a person, excluding a state agency, presents a public document to the county clerk for recording or filing,

6) that the fund generated from the collection of fees under this Order may be expended only for the preservation and restoration of the County Clerk's records archive,
7) that the funds may not be used to purchase, lease, or develop computer software to geographically index public records, excluding public records by lot and block description as provided by §193 009(B)(4) of the Local Government Code,
8) that the plan presented to this Court on August 7, 2012 be approved
9) that the County Clerk post in a prominent area of his office a notice that reads in all capital letters "The Commissioners Court of Galveston County has determined that a records archive fee of $5 00 is needed to preserve and restore county records"
10) that any excess funds, if any, generated from the collection of this fee remaining after completion of a county records archive preservation and restoration project may be expended only for the purposes described by §118 0216 of the Local Government Code which specifies the fee may be used only to provide funds for specific records management including for automation purposes
11) that this Order Setting the Fee, the County Clerk's Plan and the Court's Approval of the Plan will be adopted annually

Upon Motion Duly Made and Seconded the above Order was unanimously passed this the 21st day of August, 2012

Attest:

Dwight D. Sullivan
County Clerk

By: Brandy Chapman **Deputy**
Brandy Chapman

County of Galveston, Texas

By: Mark A. Henry
Mark A. Henry
County Judge

BY ORDER DATED AUGUST 21, 2012 THE COMMISSIONERS' COURT OF GALVESTON COUNTY HAS DETERMINED THAT A RECORDS ARCHIVE FEE OF $5.00 IS NEEDED TO PRESERVE AND RESTORE COUNTY RECORDS.

THIS ORDER IS IN ADDITION TO THE ORDERS DATED AUGUST 30, 2006 AND AUGUST 29, 2007, SEPTEMBER 3, 2008, SEPTEMBER 2, 2009, SEPTEMBER 1, 2010 AND AND AUGUST 30, 2011 AND BECOMES EFFECTIVE OCTOBER 1, 2012.

Proposed Fee

For Preservation and Restoration of
Archived Records

Presented By

Dwight D Sullivan, County Clerk

Date July 25, 2012

The County of Galveston
P O BOX 17253
JUSTICE CENTER
GALVESTON, TEXAS 77552
www co galveston tx us/County_Clerk

DWIGHT D SULLIVAN
COUNTY CLERK

PRESERVATION AND RESTORATION RECORD PLAN

EXECUTIVE SUMMARY

The County Clerk's office will continue to take advantage of the legislation that is designed to preserve archived records by adding an archive fee to each filed or recorded document This fee is to be dedicated to that task The vast majority of the permanent records in the County Clerk's office are paper based or on 16mm microfilm Map and plat film is 35 mm roll film or aperture cards These records are used on a daily basis by the public and are vulnerable to loss by theft and wear and tear Many are in such poor condition they are falling apart due to such wear and tear

With no cost to the County, adding an archive fee to cover the cost of preserving these paper-based documents can preserve these records The $5 00 fee is assessed on any instrument, document, paper, or other record that the County Clerk is authorized to accept for filing or recording (deed or official public records, assumed names, marriage licenses, probate and civil case filings) In addition to preserving the documents, the archival process may include the creation of images that can be added to our existing imaging system and improve customer service

ASSESSMENT OF FEE

County Clerks are authorized to collect a records management fee for maintaining and preserving current document s In most cases, this fee is not sufficient to also preserve and restore archived records In 2003, legislation was enacted that addressed preservation of archived records as well The effective date of the Act was September 1, 2003, and the expiration date was repealed in SB 526 of the 79th Legislation

Originally, this legislation applied to counties adjacent to international borders, giving them the ability to charge a Records Archive fee not to exceed $5 00fortherecordingor filing of public documents in County Clerk's offices County Clerk's Records Archive Fee under Sec 118 025 and Sec 118 011 (e) of the Texas Local Government Code removes "adjacent to international borders" restriction and opens the fee to all Texas counties In the County Clerks Records Archive Fee under Sec 118 025 and Sec 118 011 (f) of the Texas Local Government Code it provides for a fee not to exceed $5 00 to be imposed for recording or filing public documents in County Clerk's offices for the purpose of preserving, restoring, and managing county records The most recent amendment to the original legislation allows the County Clerk's to use this fee for records management purposes regardless of the year filed (removes the pre-1991 stipulation) and also removes 2008 as the end date for the collection of the fee

These statutes authorize the Commissioners' Court to adopt a Records Archive fee as part of the County's annual budget If the provisions of these statutes are implemented, the County will experience a revenue gain This additional revenue will be dedicated to helping County Clerk's focus on preserving older records

It is the plan of the County Clerk's office to continue assessing this Records Archive Fee of $5 00 for each "Public document" filed in the County Clerk's office "Public document" means any instrument, document, paper, or other record that the county clerk is authorized to accept for filing or maintaining to be utilized to contract with an outside vendor to preserve and enhance the public's access to public documents filed in the County Clerk's office

STEPS TO IMPLEMENT

Prepare Archive Plan
Commissioner's Court Approval
Publish Notice
Public Hearing
Post Notice of Fee in a conspicuous place

CURRENT PROJECT GOAL

The Goal is to capture and archive all documents as efficiently as possible to suspend or reduce deterioration of public records and improve the public access to these documents in a manner that reduces the risk of deterioration

SCOPE

- Modernize and upgrade record systems in the office
- Continue to scan and digitize OPR bound books and add to existing computer system
- Eliminate or reduce manual lookups and searches
- Expedite record searching by having more records available for electronic retrieval
- Provide more public information to the citizens of Galveston County via the Internet
- Continue to eliminate the need for paper records
- Preserving original records by reducing daily usage
- Provide adequate staff to scan, convert, digitize, import and place archived data online for public viewing

This document addresses the restoration and preservation needs of the County Clerk's Records Archive No other departments are addressed

FUTURE PLANS

Integrate all existing paper and 16mm microfilm records in the County Clerk's Office into the existing document management and imaging system, while preserving the original documents for historical purposes This includes the de-acidification of many of the older books containing Real Property Records

Address Court records Civil, Probate, Misdemeanor and Commissioner's Court

Converting/scanning Marriage Record Books from 1838 to 1990 and bring into the document management and imaging system

Converting/scan Delayed Birth/Delayed Death Records and bringing into the document management and imaging system

SUMMARY

The Legislature has provided a means to raise revenue for the records management and preservation of County Clerk property records, court records and vital statistic's This "user" fee is an alternative to raising taxes or spending general fund monies to accomplish these projects This plan will be executed as money is accrued and deposited into a special revenue account Any outsourcing and/or purchase of equipment will be done through standard purchasing processes

The completion of these projects will increase storage space in the archives Approval will prevent the potential hazard and "disasters in waiting" as years and years of vital county property records sit under sprinkler systems, direct hits from storms and other unspeakable hazards-unprotected and not adequately preserved

PROJECTED REV ENUE

Document Type	Documents Subject to Fee	Revenue at $5.00
Official Public Records	70,000	$350,000
Marriage License	2,350	$11,750
Assume Names (Business Names)	2,800	$14,000
Civil	2,150	$10,750
Probate	1,200	$6,000
TOTAL	83,400	$392,500

Archive Plan

Fiscal Year 2013

The current conversion for the County Clerk's Office is in the last stages for completion for images from 1981through1982, which are on 16mm microfilm These records are presently being converted to digital records and being imported into the system and being verified at this time Once this digitization has been fully completed and to the office's standards, the public will be able to conduct searches from a single system for official records (including images) from the present back to 1981 Presently searches for official records (including images) begin from 1983 to present Maps and plats have been digitized and will be next to import into the system and reviewed back to 1836 A user of the system is able to view the image and index for a given document displayed side-by-side on public research stations in the Clerk's office and over the Internet as well, to provide added convenience for citizens and researchers

For records filed between 1965 and 1981 indexes will continue to be available online, but access to the documents will be from the original paper in the Clerk's research library, both indexes and documents older than 1965 will remain in books until they can be addressed by future projects Currently the County Clerk has implemented a small pilot project using office personnel to process some of these bound books By pulling resources together to scan volumes of various categories which are bound books size of 8 ½" X 11" creating digital images in house, verify and attaching to index and pulling these records into the system Gradually this project will bring additional research resources into the system Working with the vendor providing us a workflow solution and Advanced Back file Utility Software will help bring these digital records into the system more efficiently in the future

The next immediate goal or objective as funds become available from the collection of the Archive Fee, the County Clerk's office proposes to begin the second planning stage to the conversion and preservation project plan The second phase will be to scan the books and import those images into the system also The approximate volumes of the documents of various categories are approximately 3 5 million pages in books of various sizes These books are of various sizes, from 8 ½" X 11" all the way up to 14" X 18" Of these larger format books, all books will need to be re-bound into a format that allows the pages to be removed for scanning

Revenue collected and not expended in the fiscal year will be carried forward in the Records Archive Funds and used on future archive projects in the County Clerk's office

AGENDA ITEM #33j

Galveston County
Legal Department

COUNTY COURTHOUSE
722 MOODY 5th FLOOR
GALVESTON, TEXAS 77550-2317

HARVEY BAZAMAN

Donald Glywasky
Barry C Willey
Myrna S Reingold

Galveston Line
(409) 770-5562

Houston Line
(281) 316-8300

Fax Line
(409) 770-5560

August 16, 2012

Hon Mark A Henry, County Judge
Hon County Commissioners
Galveston County Courthouse
Galveston, Texas 77550

Re 2012 Tax Levy for Galveston County

Gentlemen

Enclosed please find the proposed Tax Levy for 2012 The total amount of the County's levy is $ 60877 Exemptions from prior years have remained unchanged

There is no provision for discounts for early payment

I am sending copies of this Tax Levy to the Tax Assessor-Collector, the County Auditor, the Director of Finance and Administration/Budget Officer and the other people listed below for review It is important that the levy be examined for errors and accuracy Assuming there are no errors found the levy is ready for adoption by the Commissioners' Court and the County Judge's signature

Sincerely yours,

Harvey Bazaman

Harvey Bazaman
Galveston County Legal Dept

Cc Hon Cheryl E Johnson, Tax Assessor-Collector
Hon Cliff Billinsgley, County Auditor
Mr Jeff Modzelewski, Chief Accountant
Mr Mel Trammell, Director of Finance and Administration/Budget Officer

Galveston County
Tax Levy for the Year 2012

Be it Ordered by the Commissioners' Court of Galveston County, Texas as Follows:

Section I
Annual Occupation Tax

That There Be and is Hereby levied on and ordered collected from every person, firm, company, corporation or association of persons pursuing, within the limits of the County of Galveston, Texas, the occupation named in the following subdivisions of this Section, an **Annual Occupation Tax** on every such occupation or separate establishment as follows

Every owner save an owner holding an import license and holding coin-operated machines solely for resale, who exhibits, displays, or who permits to be exhibited or displayed in the State of Texas, County of Galveston, any coin operated machine, shall pay and there is hereby levied as provided in V T C A , Occupations Code Chapter 2153 on each coin operated machine as defined therein, except as are exempt herein, an **Annual State Occupation Tax of Sixty and No/100 Dollars ($60.00).**

Gas meters, pay telephones, pay toilets, food vending machines, confection vending machines, beverage vending machines, merchandise vending machines, and cigarette vending machines, which are now subject to an Occupation or Gross Receipts Tax, stamp vending machines and "service coin operated machines" as the term is defined V T C A , Occupations Code §2153 002 are, as pursuant to Article §2153 004, expressly exempt from the tax levied above

Pursuant to V T C A , Occupations Code Chapter 2153, Subchapter J, from every person, firm, company, corporation or association of persons, pursuing any occupation upon which an occupation Tax is levied by the State of Texas, and upon which a levy of a County Occupation Tax is authorized by law, there is levied on every such occupation or separate establishment, an **Annual Tax** equal in the amount to **one-fourth (1/4) of the Occupation Tax on coin operated machines** levied by the State of Texas thereon

Section II
Alcoholic Beverage Tax

A) Pursuant to §61 36 of the Alcoholic Beverage Code there is hereby levied upon, assessed against, and ordered collected from, each licensee a fee equal to one-half of the State fee for each license, except a temporary or agent's beer license, issued for premises located within Galveston County, Texas

B) Pursuant to §11 38 of the Alcoholic Beverage Code there is hereby levied upon, assessed against, and ordered collected from each permittee, with the exception of those who are exempt as specified therein, a fee equal to one-half of the State fee for each permit issued for premises located within the County

Section III

That There Be and Are Hereby levied and ordered, assessed and collected for the year 2012, on all real and personal property situated, and on all property owned in Galveston County, Texas, on the first day of January, 2012 (except so much thereof as may be exempted by the Constitution and Laws of the State of Texas, and the County, or the United States) the following **Ad Valorem Taxes:**

(A.) Constitutional Levy - .80 Limit, Article VIII, Section 9 Texas Constitution:

General Operating Funds – (on the one hundred dollars of valuation)	**.471919**
Debt Service Funds - (on the one hundred dollars of valuation)	**.085536**
Total Constitutional Levy	**.557455**

(B.) Special Road Levy – Unlimited, Article III, Section 52, Texas Constitution:

Debt Service Funds - (on the one hundred dollars of valuation)	**.03496**

(C.) Farm to Market Lateral Road/Flood Control - .30 Limit, Article VIII, Section 1-A, Texas Constitution

General Operating Funds – (on the one hundred dollars of valuation)	**.008855**

(D. Mosquito Control District – .05 Limit Texas Health and Safety Code, Section 344.003

	.0075
Total Levy	**.60877**

Section IV
Road District No. 1

All Outstanding Bonded Indebtedness for prior years has been paid on **Galveston County Road District No. 1** It is therefore unnecessary to Levy a Road District Tax on property located within this District for 2012

Section V
Residential Homestead Exemptions

The various residential homestead exemptions have been adopted by Order of this Court dated June 26, 2012 under Item Number 20A

Section VI
Split Pay Option

A Split –payment option of 2012 Ad-Valorem Taxes authorized by V T C A , Tax Code §31 03 was adopted by Order of this Court dated June 26, 2012 under Item Number 20B

Section VII
Tax Freeze

The tax freeze on the residence homestead of a disabled individual or an individual 65 years of age or older that is authorized pursuant to the authority given it by Article VIII Section 1-b(h) of the Texas Constitution and Tax Code §11 261 was adopted by Order of this Court dated June 20, 2005 This Order may be found in 300-41-2433 of the Commissioners' Court minutes

Section VIII
Section 26.05 Tax Code Statements

THIS TAX RATE WILL RAISE MORE TAXES FOR MAINTENANCE AND OPERATIONS THAN LAST YEAR'S TAX RATE.

THE TAX RATE WILL EFFECTIVELY BE RAISED BY n/a% AND WILL RAISE TAXES FOR MAINTENANCE AND OPERATIONS ON A $100,000 HOME BY APPROXIMATELY $n/a (The adopted tax rate will not exceed the effective tax

rate this year so this paragraph is not applicable.)

Upon Motion Duly Made and Seconded, the above foregoing **Tax Levy** and **Orders** are hereby passed by Commissioners' Court meeting on this the 21st day of August, 2012 with 5 votes cast in favor thereof and 0 votes cast against

County of Galveston

BY: _____
Mark A. Henry, County Judge

Attest:

_____
Dwight D. Sullivan
County Clerk
W/depts/tax/tax levy 2012

By: _____ **Deputy**
Brandy Chapman